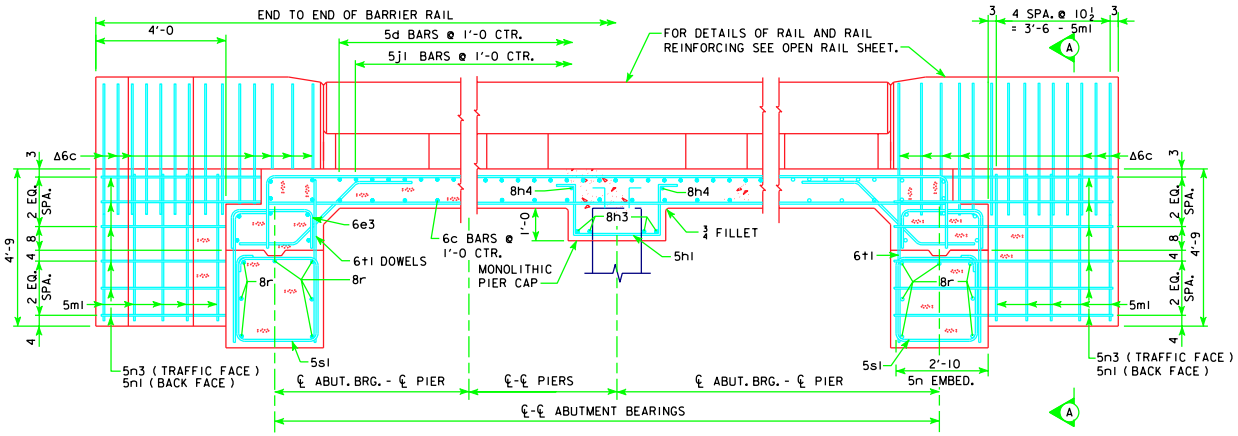

PART LONGITUDINAL SECTION NEAR GUTTER LINE

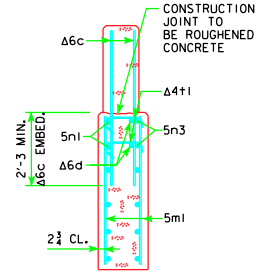

SECTION A-A

Δ NOTE: SEE OPEN BARRIER RAIL DETAILS IN THESE PLANS FOR DETAILS OF BARRIER RAIL END SECTION.

NOTE: 5m1, 5n1, & 5n3 BARS ARE INCLUDED IN SUPERSTRUCTURE BAR LIST. 6c, 6d & 4t1 BARS ARE INCLUDED IN BARRIER RAIL BAR LIST.

SUPERSTRUCTURE NOTES:

THIS BRIDGE IS DESIGNED FOR HL-93 LOADING PLUS AN ALLOWANCE OF 20 POUNDS PER SQUARE FOOT OF ROADWAY FOR FUTURE WEARING SURFACE.

THE SLAB AS SHOWN INCLUDES A ½ INCH INTEGRAL WEARING SURFACE.

THE MINIMUM CLEAR DISTANCE FROM FACE OF CONCRETE TO NEAR REINFORCING BAR SHALL BE 2 INCHES UNLESS OTHERWISE NOTED OR SHOWN. ALL REINFORCING STEEL IS TO BE SECURELY WIRED IN PLACE. SEE "BAR CHAIR NOTE".

ALL REINFORCING SHALL BE GRADE 60.

THE CONCRETE SLAB IS TO BE PLACED WITH A MINIMUM OF CONSTRUCTION JOINTS. PROCEDURES FOR PLACING SLAB CONCRETE SHALL BE SUBMITTED FOR APPROVAL TOGETHER WITH A STATEMENT OF THE PROPOSED METHOD AND EVIDENCE THAT THE CONTRACTOR POSSESSES THE NECESSARY EQUIPMENT AND FACILITIES TO ACCOMPLISH THE REQUIRED RESULT. SLAB FALSEWORK SHALL BE REMOVED PRIOR TO CONSTRUCTION OF THE BARRIER RAILS.

NOTE THAT WHEN PORTLAND CEMENT APPROACH PAVEMENT IS PLACED, COMPRESSIBLE JOINT MATERIAL MUST BE USED BETWEEN PAVEMENT AND END OF BRIDGE.

BAR CHAIR NOTE:

TOP MAT OF REINFORCING STEEL IS TO BE SUPPORTED BY INDIVIDUAL BAR CHAIRS SPACED AT NOT MORE THAN 3'-0 CENTERS LONGITUDINALLY AND TRANSVERSELY. THE BOTTOM MAT OF REINFORCING STEEL IS TO BE SUPPORTED BY INDIVIDUAL BAR CHAIRS SPACED AT NOT MORE THAN 3'-0 CENTERS LONGITUDINALLY AND TRANSVERSELY, OR BY CONTINUOUS ROWS OF HIGH CHAIRS OR SLAB BOLSTERS SPACED 4'-0 APART.

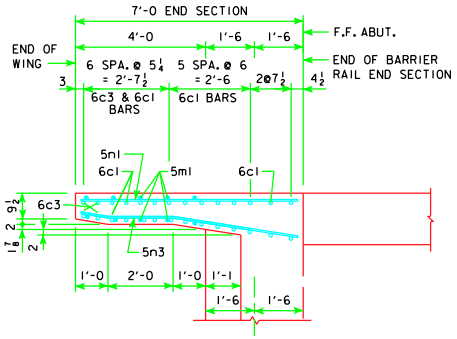

PART PLAN 0° SKEW
(RAILING NOT SHOWN)

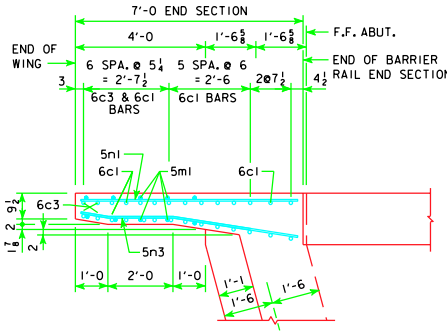

PART PLAN 15° SKEW
(RAILING NOT SHOWN)

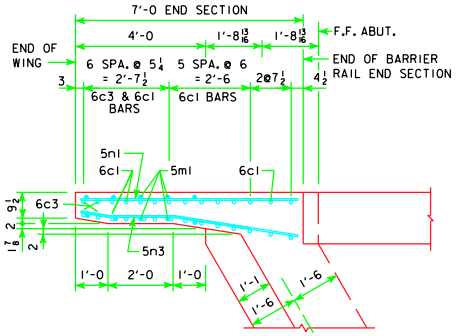

PART PLAN 30° SKEW
(RAILING NOT SHOWN)

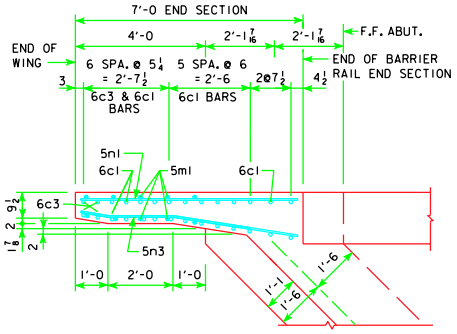

PART PLAN 45° SKEW
(RAILING NOT SHOWN)

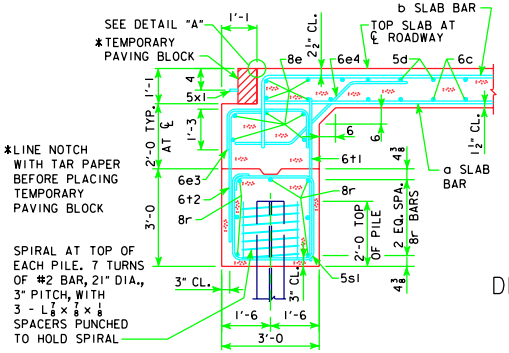

SECTION NORMAL TO ABUTMENT AT ℄
(BRIDGE LENGTHS 70'-110')

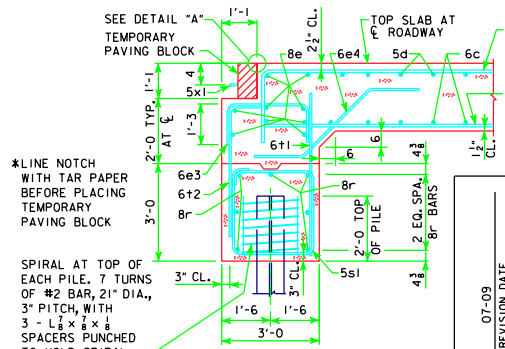

SECTION NORMAL TO ABUTMENT AT ℄
(BRIDGE LENGTHS 120'-150')

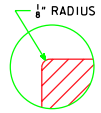

DETAIL "A"

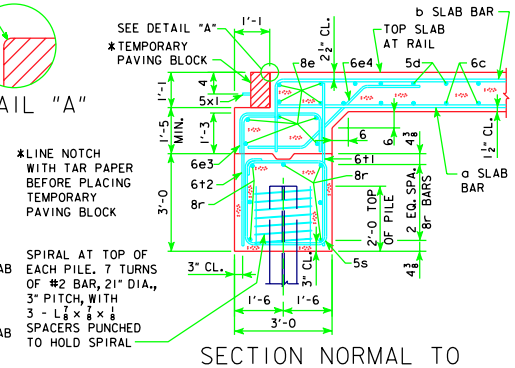

SECTION NORMAL TO ABUTMENT AT GUTTERLINE

REVISED 07-09 - CHANGED 6c1 BAR LOCATIONS IN PART PLAN'S.

07-09
LATEST REVISION DATE

APPROVED BY BRIDGE ENGINEER

Iowa Department of Transportation
Highway Division

STANDARD DESIGN - 24' ROADWAY, 3 SPAN BRIDGES

CONTINUOUS CONCRETE SLAB BRIDGES

NOVEMBER, 2006

SUPERSTRUCTURE DETAILS ALL BRIDGES

J24-20-06