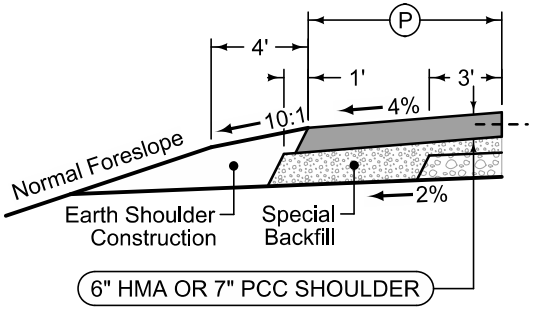

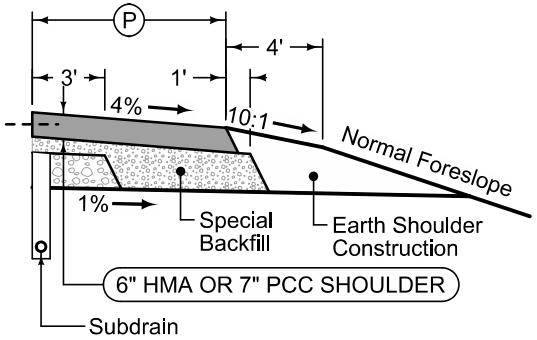

Paved Shoulder at Guardrail

PCC Shoulder Jointing:
Longitudinal joint: BT-1 or BT-5
Transverse joints: C at 20' spacing
HMA Shoulder Jointing
Longitudinal joint: B

4_P_Guard_
10-21-14

Direction of Travel	BEGIN STATION	END STATION	P Feet