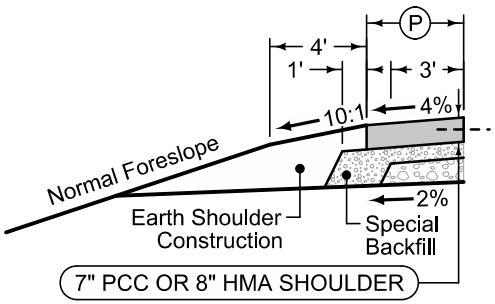

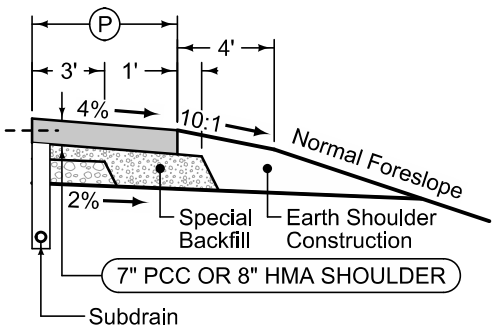

Paved Shoulder Alternates

PCC Shoulder Jointing:
Longitudinal joint: BT-1 or BT-5
Transverse joints: C at 20' spacing
HMA Shoulder Jointing:
Longitudinal joint: B

1R_P_ALT_
10-21-14

BEGIN STATION	END STATION	P Feet