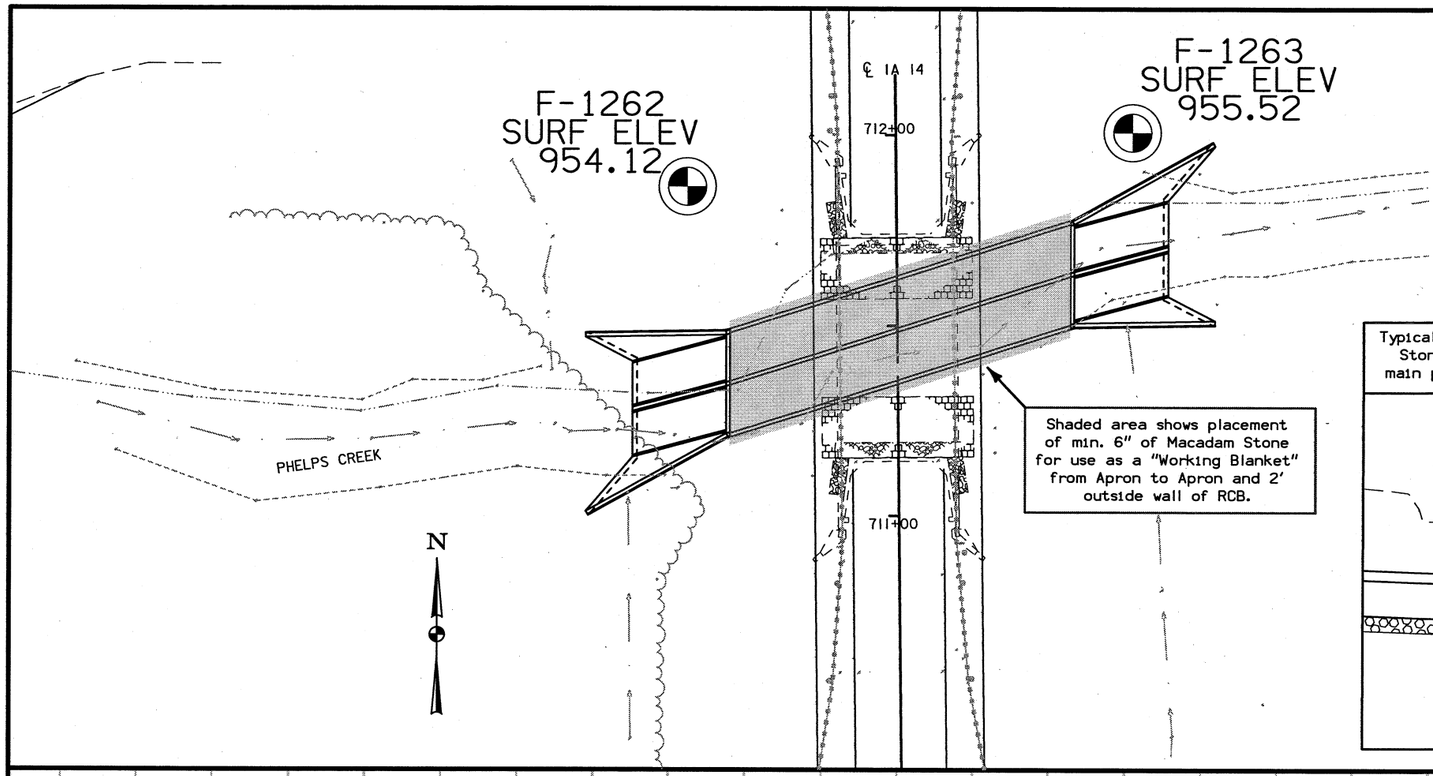

Typical showing placement of min. 6" of Macadam Stone for use as a "Working Blanket" under main part of the RCB but not under the apron.

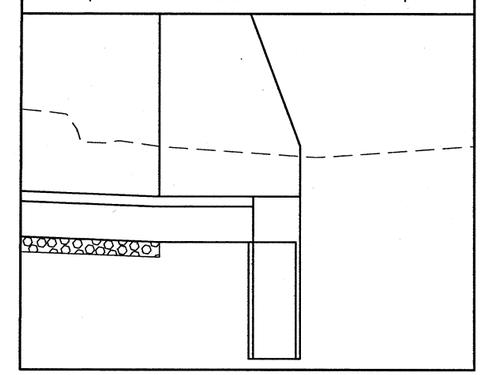

GEOTECHNICAL DESIGN

I hereby certify that this engineering document was prepared by me or under my direct personal supervision and that I am a duly licensed Professional Engineer under the laws of the State of Iowa.

LICENSED PROFESSIONAL ENGINEER Robert L. Stanley 08468 IOWA

Signature Robert L. Stanley Date 5-18-10

Printed or Typed Name Robert L. Stanley

My license reneval date is December 31, 2010

Pages or sheets covered by this seal: SPS.1

0 ENGLISH 40
SCALE IN FEET

LOCATION

IA 14 OVER PHELPS CREEK
T-90 N R-16 W
SECTION 32
ALBION TOWNSHIP
BUTLER COUNTY
BRIDGE MAINT. NO. 1244.4S014

DESIGN FOR 18° SKEW (R.A.)

TWIN 12' X 12' X 94' REINFORCED CONCRETE BOX CULVERT

SOIL PROFILE SHEET

STATION 711+48.84

BUTLER COUNTY

IOWA DEPARTMENT OF TRANSPORTATION - HIGHWAY DIVISION

DESIGN SHEET NO. 1 OF 1 FILE NO. 30511 DESIGN NO. 111

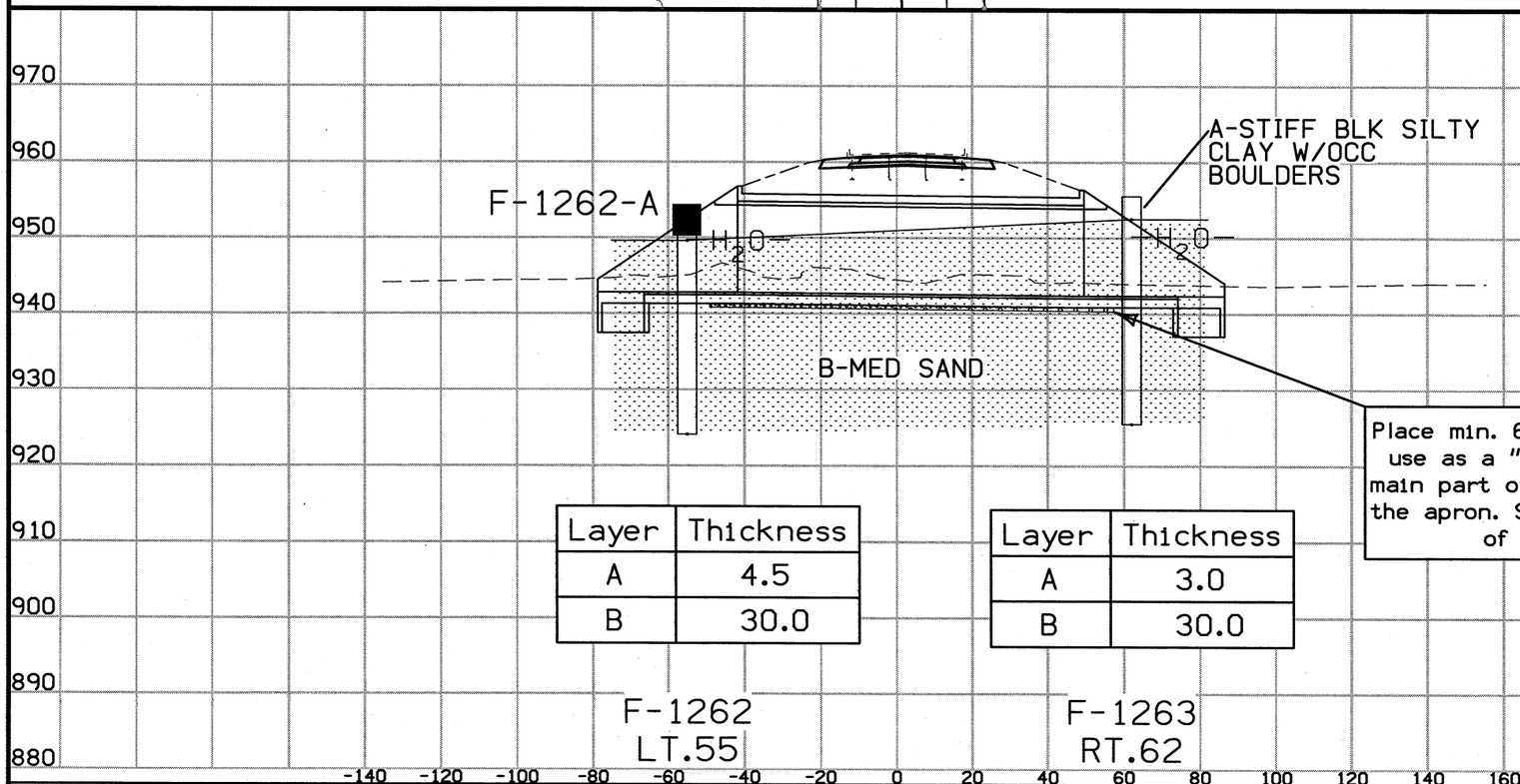

Layer	Thickness
A	4.5
B	30.0

Layer	Thickness
A	3.0
B	30.0

Place min. 6" of Macadam Stone for use as a "Working Blanket" under main part of the RCB but not under the apron. See Plan View for extent of placement area.

Boring No.	Date Drilled	GroundWater Level (Ft.)
F-1262	07/20/09	4.4
F-1263	07/20/09	5.3

SHELBY TUBE CORE DATA

CORE NO.	F-1262-A
CLASSIFICATION [AASHTO]	A-6(9)
COEFF.CONSOL. SQ. FT /DAY	0.108
TRIAXIAL COMPRESSION	CU
COHESION - PSF	313
FRICTION COEFF.	0.204
MOISTURE CONTENT %	24.3
DRY DENSITY - PCF	94.4

UU-UNCONSOLIDATED & UNDRAINED
CU-CONSOLIDATED & UNDRAINED