DETOUR BRIDGE CORE-OUT DETAILS

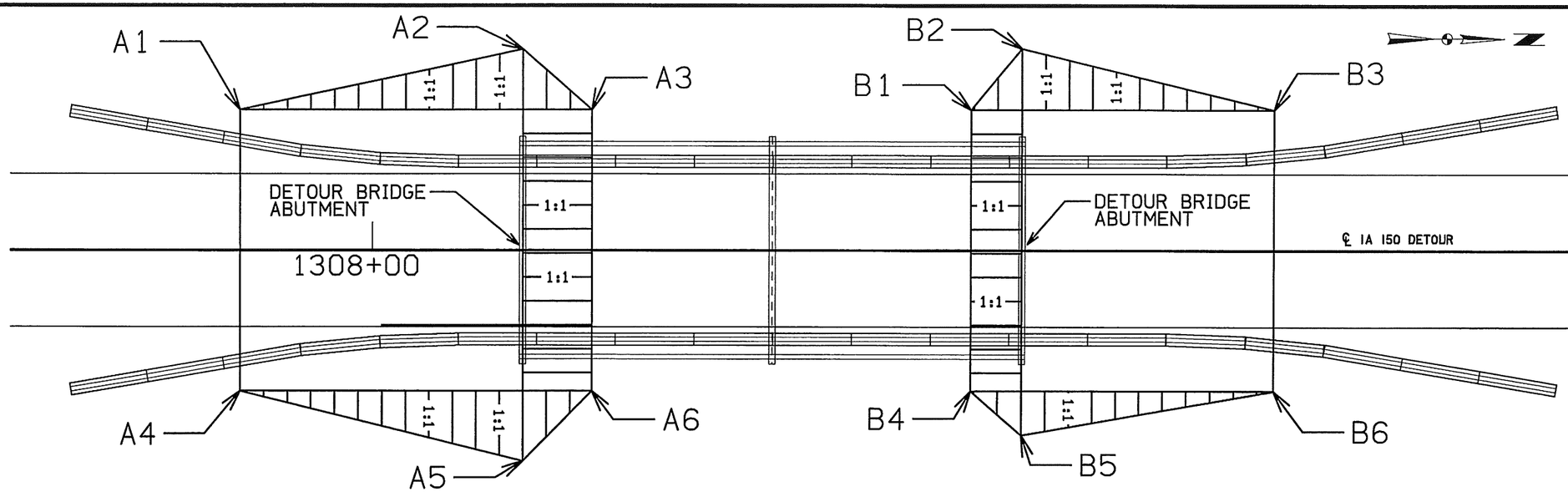

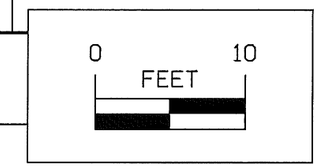

NOTE: THIS SHEET IS A DIFFERENT SCALE THAN SPS.1 AND 2

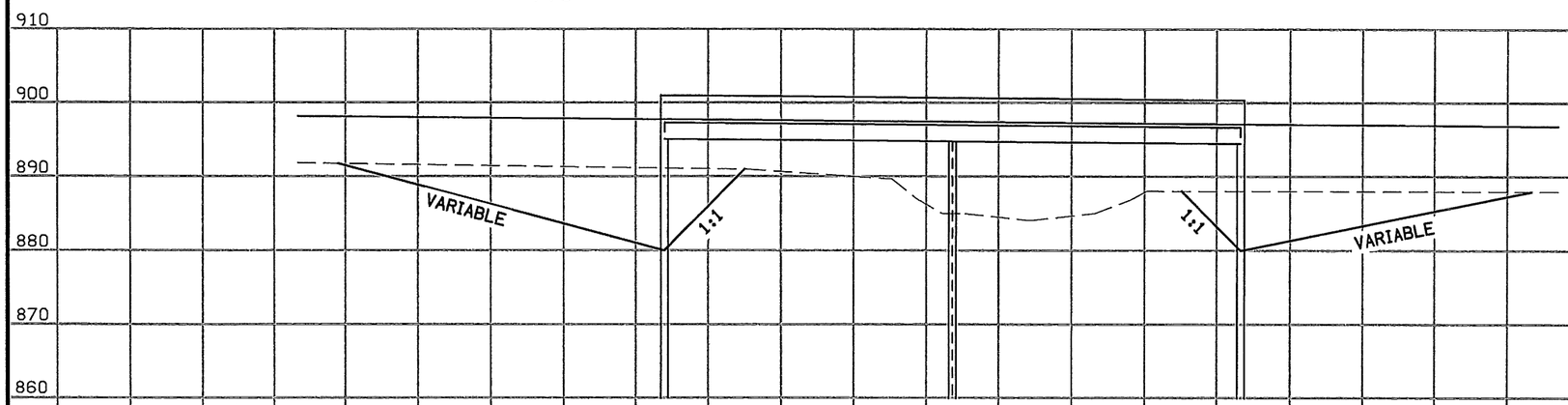

APPROXIMATE CORE-OUT CORNER POINTS					
SOUTH END			NORTH END		
CORNER	STATION	OFFSET	CORNER	STATION	OFFSET
A1	1307+79.0	Lt. 22.0	B1	1308+95.2	Lt. 22.0
A2	1308+24.0	Lt. 31.6	B2	1309+03.2	Lt. 31.7
A3	1308+35.0	Lt. 22.0	B3	1309+43.3	Lt. 22.0
A4	1307+79.0	Rt. 22.0	B4	1308+95.2	Rt. 22.0
A5	1308+24.0	Rt. 33.1	B5	1309+03.2	Rt. 29.0
A6	1308+35.0	Rt.22.0	B6	1309+43.3	Rt. 22.0

FROM STATION 1307+79.0 TO 1308+24.0 AND FROM STATION 1309+03.2 TO 1309+43.3, DO CORE-OUT DOWN TO ELEVATION 880.0 AS SHOWN ON THIS SHEET. SLOPE SIDES OF CORE-OUT AREA AS DEPICTED ABOVE. INSTALL POLYMER GRID (STANDARD SPECIFICATIONS SERIES 2009) ON THE NORTH AND SOUTH SIDES OF EACH CORE-OUT, AND BACKFILL TO NATURAL GROUND WITH SPECIAL BACKFILL. EXCAVATED SOIL TO BE WASTED OR USED AS SLOPE DRESSING.

THIS SHEET IS INCLUDED TO SHOW SOIL INFORMATION.
DETAILS AND NOTES SHOWN ELSEWHERE IN THESE PLANS SHALL BE USED FOR STRUCTURE CONSTRUCTION.

LOCATION

IA 150 DETOUR OVER BEAR CREEK
T 87 N R 9 W
SECTION 3
HOMER TOWNSHIP
BUCHANAN COUNTY
BRIDGE MAINT. NO. N/A

ESTIMATED QUANITIES	
POLYMER GRID	560 Sq. Yds.
CORE-OUT	1,026 Cu. Yds.
SPECIAL BACKFILL	1,939 Tons

DESIGN FOR 0° SKEW

79'-2 X 32'-8 STEEL I-BEAM DETOUR BRIDGE

39'-7 SPANS

SOIL PROFILE SHEET

STATION: 1308+63.60

BUCHANAN COUNTY

IOWA DEPARTMENT OF TRANSPORTATION - HIGHWAY DIVISION

DESIGN SHEET NO. 3 OF 4 FILE NO. 30661 DESIGN NO. 213

1308+00 +10 +20 +30 +40 +50 +60 +70 +80 +90 1309+00 +10 +20 +30 +40 +50 +60 +70 +80

ENGLISH	IOWA DOT	DESIGN TEAM STANLEY/MEGIVERN/GORJACKOVSKI	BUCHANAN COUNTY	PROJECT NUMBER BRFN-150-3(67)--39-10	SHEET NUMBER SPS.3