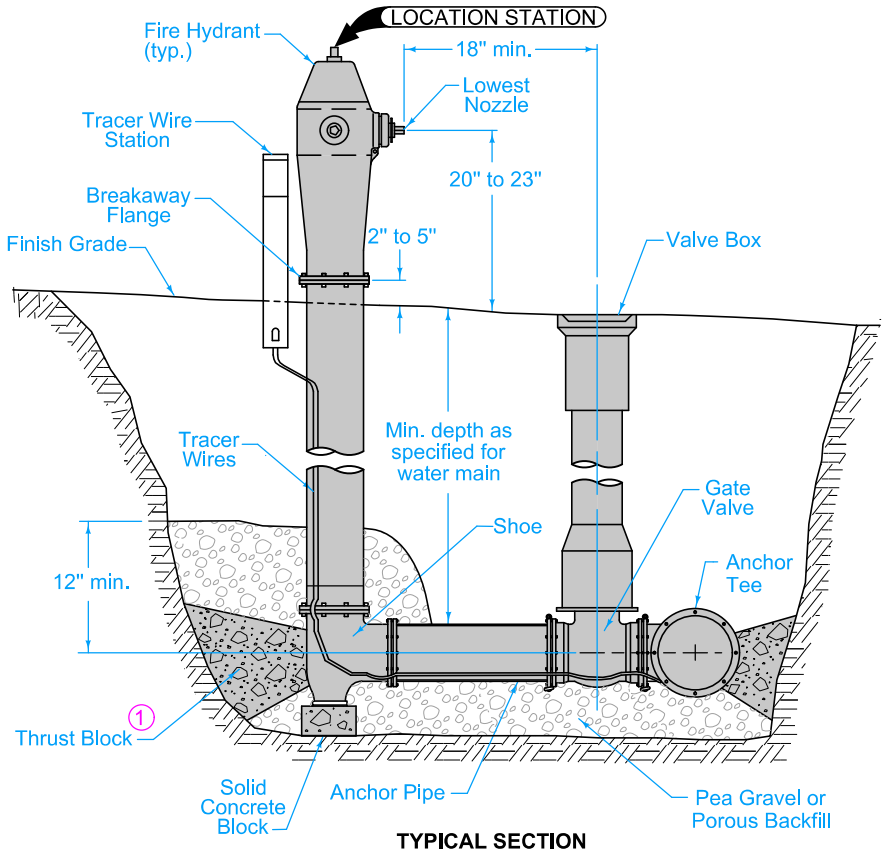

TYPICAL SECTION

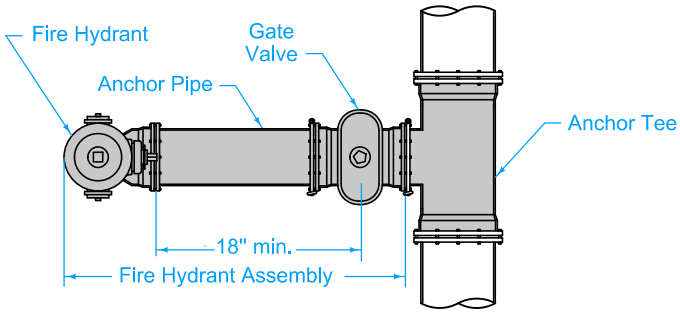

TYPICAL PLAN

Use ductile iron pipe with restrained mechanical joints for fire hydrant assembly and anchor tee.

1 Do not cover drain holes or tracer wire.

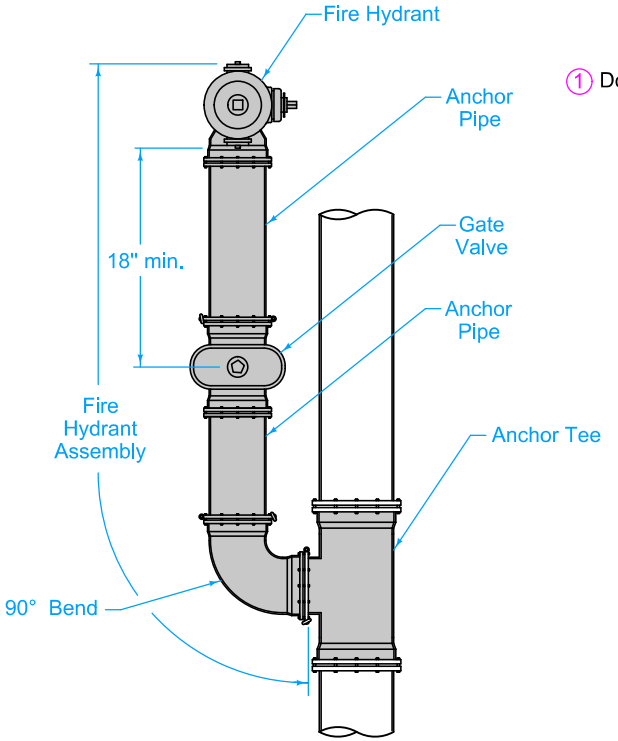

ALTERNATE PLAN

SUDAS	IOWA DOT	REVISION 2 04-18-17
FIGURE 5020.201	STANDARD ROAD PLAN	WM-201 SHEET 1 of 1

REVISIONS: Updated SUDAS and DOT logos.

Paul D. Wiegand — SUDAS DIRECTOR
Brian Smith — DESIGN METHODS ENGINEER

FIRE HYDRANT ASSEMBLY

FIGURE 5020.201 SHEET 1 OF 1