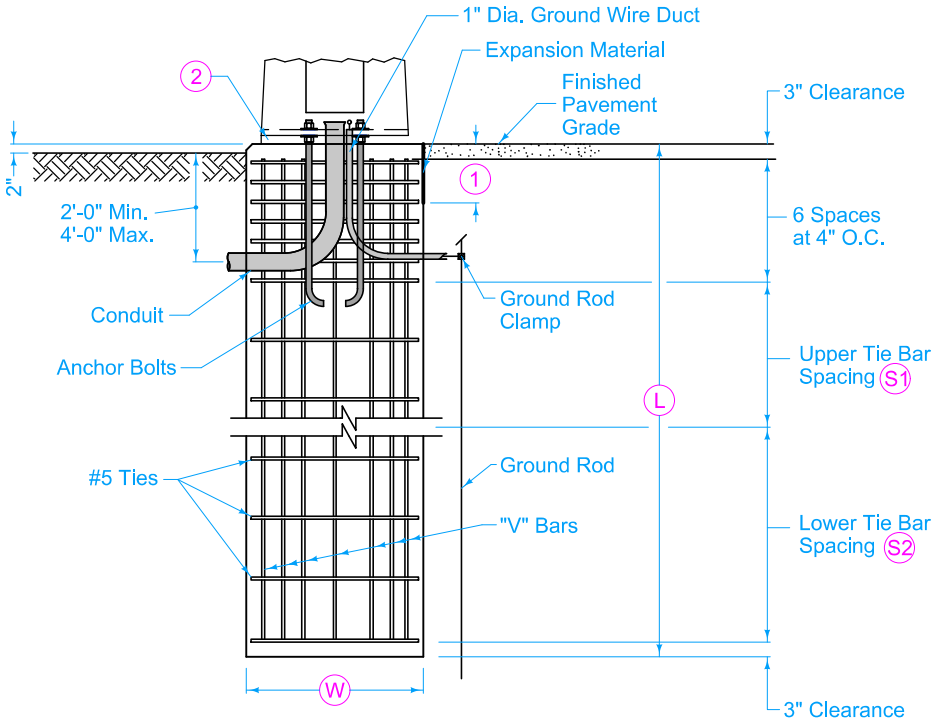

1. Shape top 11 inches with forms.
2. Install rodent guard or non-shrink grout with weep hole.

Max. Mast Arm Length	Foundation		"V" Bars			Tie Bars				
						Bar Count	Upper Spacing		Lower Spacing	
	W	L	Count	Size	Length		# Spaces	S1	# Spaces	S2
35'-0"	3'-0"	12'-0"	12	8	11'-6"	17	9	12"	N/A	N/A
45'-0"	3'-0"	14'-0"	12	8	13'-6"	19	11	12"	N/A	N/A
55'-0"	3'-0"	16'-0"	12	8	15'-6"	25	12	8"	5	12"
60'-0"	3'-0"	18'-0"	13	8	17'-6"	28	15	8"	5	12"
70'-0"	3'-6"	18'-0"	12	10	17'-6"	28	15	8"	5	12"
80'-0"	3'-6"	21'-0"	14	10	20'-6"	40	22	6"	10	8"
90'-0"	4'-0"	22'-0"	16	10	21'-6"	42	24	6"	10	8"
100'-0"	4'-0"	24'-0"	18	10	23'-6"	47	32	6"	7	8"

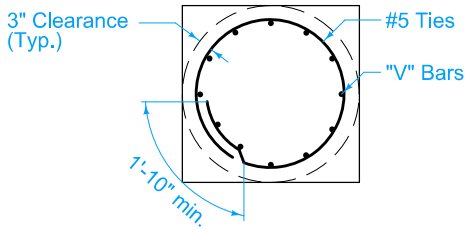

MAST ARM POLE FOUNDATION

FIGURE 8010.102 | SHEET 1 OF 2

SUDAS | IOWA DOT

REVISION: New 04-18-17

FIGURE 8010.102 | STANDARD ROAD PLAN | TS-102 | SHEET 1 of 2

REVISIONS: New.

Paul D. Wigand, SUDAS DIRECTOR | Brian Smith, DESIGN METHODS ENGINEER

TRAFFIC SIGNAL POLE FOUNDATION

1. Shape top 11 inches with forms.
2. Install rodent guard or non-shrink grout with weep hole.

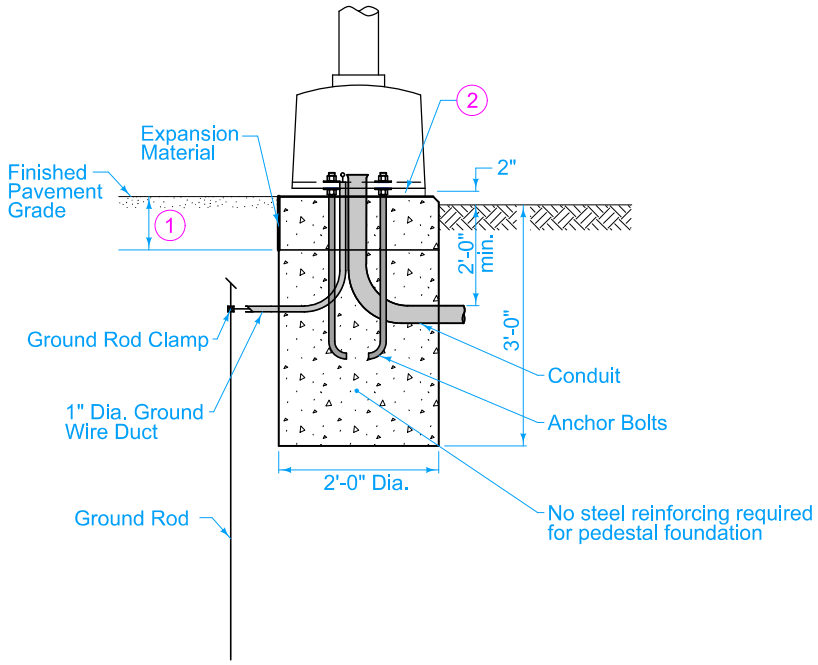

PEDESTAL POLE FOUNDATION

SUDAS	IOWA DOT	REVISION: New 04-18-17
FIGURE 8010.102	STANDARD ROAD PLAN	TS-102 SHEET 2 of 2

REVISIONS: New.

Paul D. Wigand, SUDAS DIRECTOR — Brian Smith, DESIGN METHODS ENGINEER

TRAFFIC SIGNAL POLE FOUNDATION

FIGURE 8010.102 | SHEET 2 OF 2