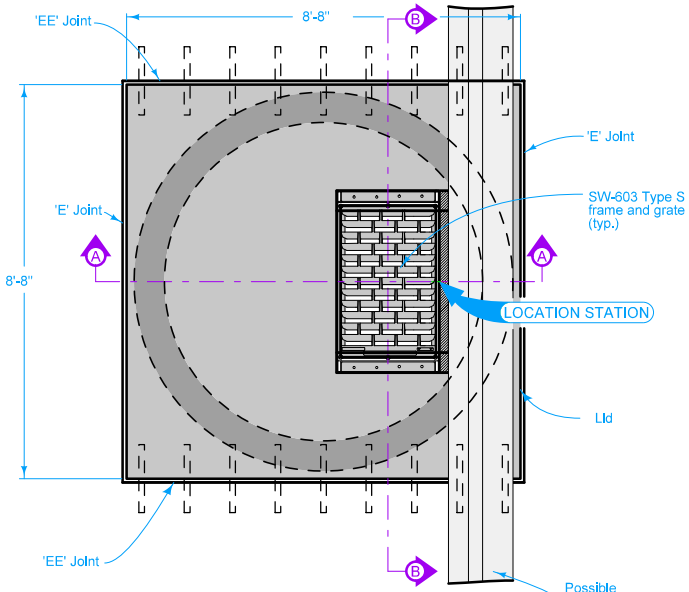

PLAN (SHALLOW)

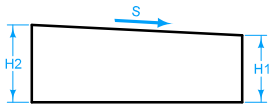

DETAIL 'A'

Dimensions		
"S" (%)	"H1" (In.)	"H2" (In.)
1	16.33	16.89
2	16.67	17.78
3	17.00	18.67
4	17.33	19.56
5	17.67	20.45
6	18.00	21.34

All plate and edge armor steel to be ASTM A 36, galvanized after fabrication.

Remove cover plate before constructing concrete barrier.

Cast frames Into Intake top so tops of grates are $\frac{1}{4}$" below Form Grade Elevation. Bolt intake frames together on both sides with four $\frac{1}{2}$" x 4" bolts.

For joint details, refer to PV-101.

1. Trowel smooth and place two layers of 30 pound roofing felt to prevent bond.
2. Match slope of top and grate to adjacent pavement.
3. 12 inch minimum above all pipes.

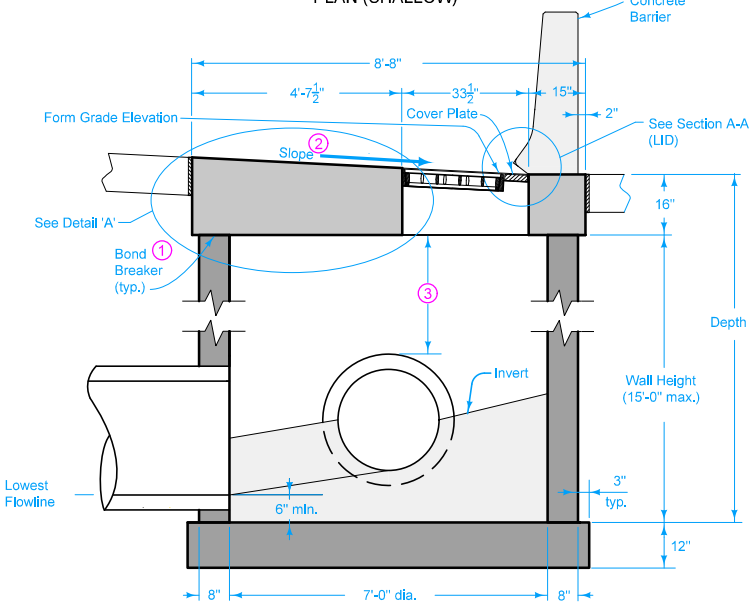

SECTION A-A (SHALLOW)

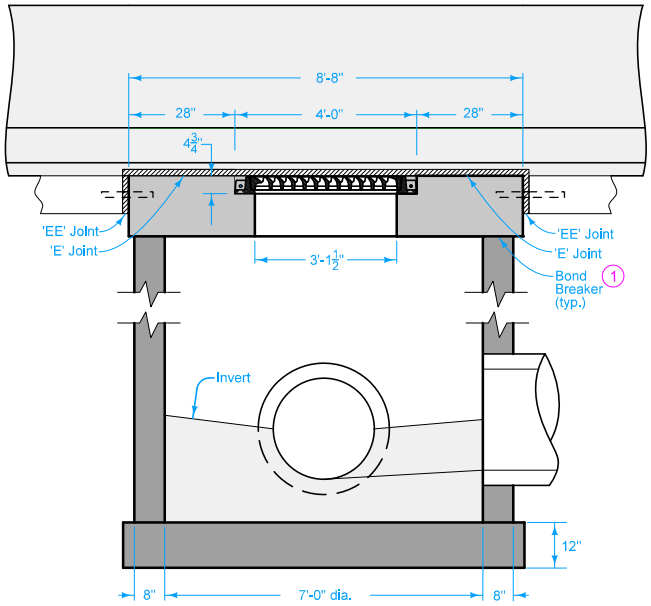

SECTION B-B (SHALLOW)

Shallow circular intake
H = 3'-0" to 15'-0"
7' barrel diameter

Deep circular option:
H = 15'-0" to 28'-0"
4' and 7' barrel diameters

Possible Contract Item:
Barrier Intake, SW-548

Possible Tabulation:
104-5B

IOWA DOT

REVISION	
4	04-21-15

STANDARD ROAD PLAN

SW-548

SHEET 1 of 6

REVISIONS: Matched slope of grate to adjacent pavement. Replaced DOT logo with new version.

Brian Smith
APPROVED BY DESIGN METHODS ENGINEER

SINGLE-GRATE BARRIER INTAKE, CIRCULAR

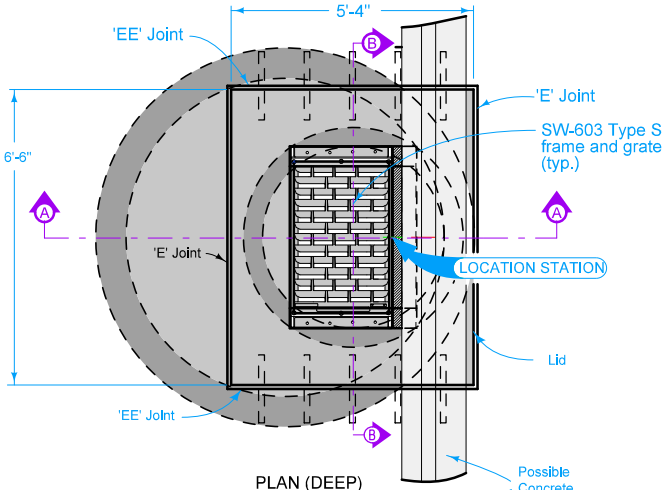

PLAN (DEEP)

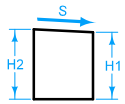

DETAIL 'B'

Dimensions		
"S" (%)	"H1" (In.)	"H2" (In.)
1	16.33	16.59
2	16.67	16.98
3	17.00	17.47
4	17.33	17.96
5	17.67	18.45
6	18.00	18.94

1. Trowel smooth and place two layers of 30-pound roofing felt to prevent bond.
2. Match slope of top and grate to adjacent pavement.

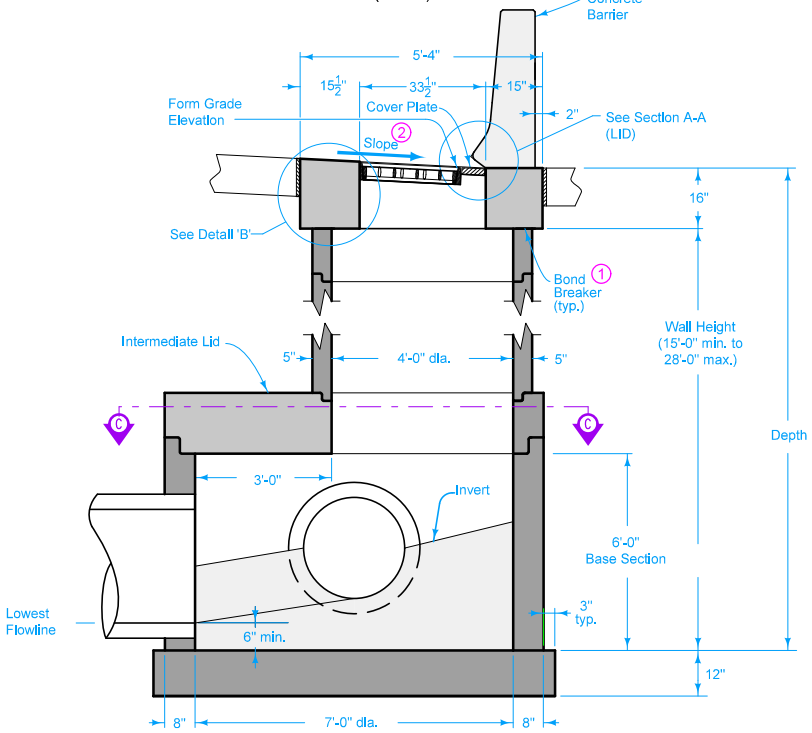

SECTION A-A (DEEP)

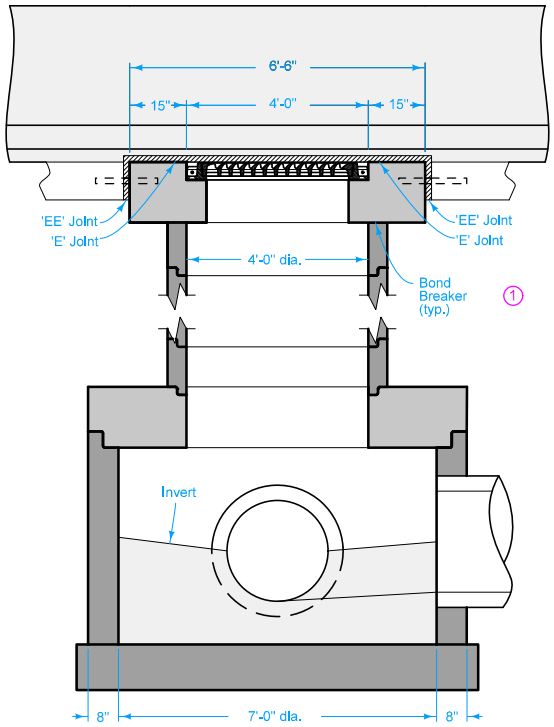

SECTION B-B (DEEP)

IOWA DOT

STANDARD ROAD PLAN

REVISION	
4	04-21-15

SW-548

SHEET 2 of 6

REVISIONS: Matched slope of grate to adjacent pavement. Replaced DOT logo with new version.

Brian Smith

APPROVED BY DESIGN METHODS ENGINEER

SINGLE-GRATE BARRIER INTAKE, CIRCULAR

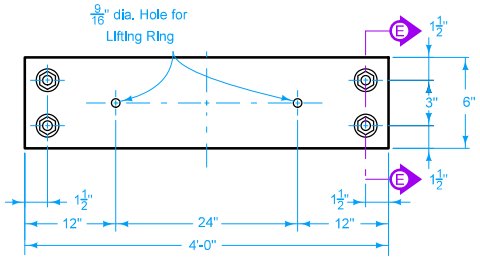

PLAN

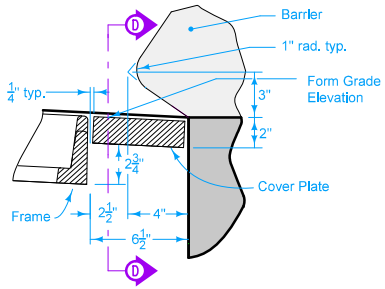

SECTION A-A
(LID)

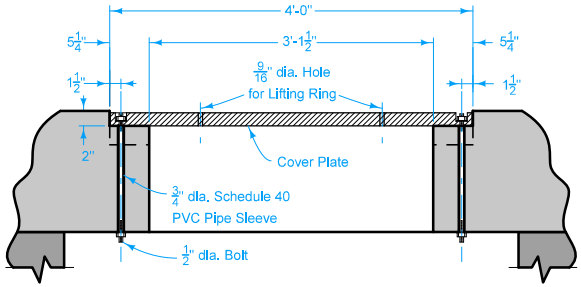

SECTION D-D

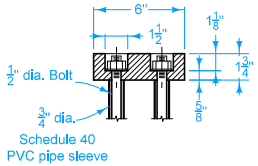

SECTION E-E

COVER PLATE

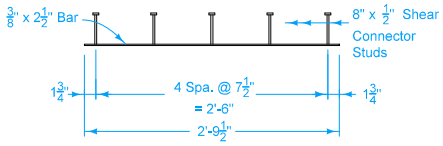

FRAME RING
(2 required)

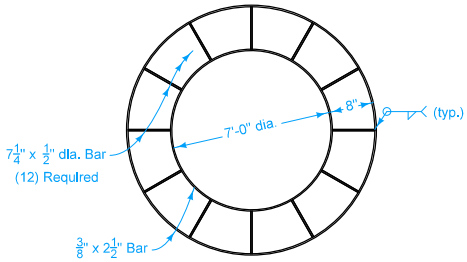

WALL (SHALLOW)

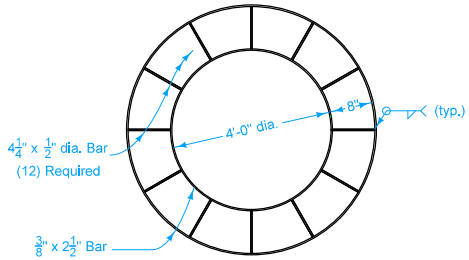

WALL (DEEP)

EDGE ARMOR

IOWA DOT

REVISION	
4	04-21-15

STANDARD ROAD PLAN

SW-548

SHEET 3 of 6

REVISIONS: Matched slope of grate to adjacent pavement. Replaced DOT logo with new version.

Brian Smith
APPROVED BY DESIGN METHODS ENGINEER

SINGLE-GRATE BARRIER INTAKE, CIRCULAR

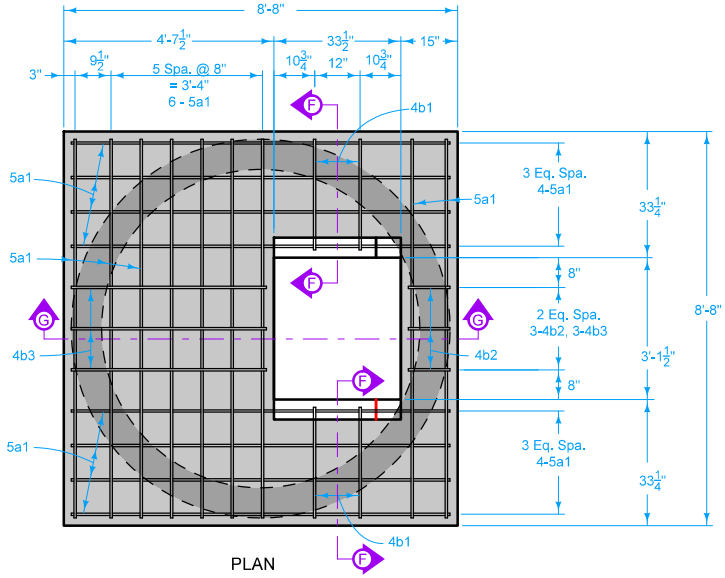

PLAN

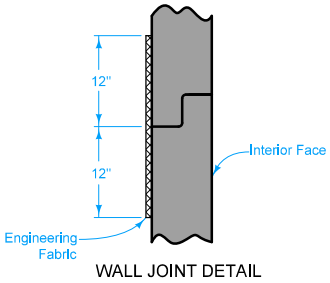

WALL JOINT DETAIL

LID REINFORCING BAR LIST					
EPOXY-COATED					
BAR	LOCATION	SHAPE	NO.	LENGTH	WEIGHT
5a1	Lid, Longitudinal & Transverse	—	34	8'-4"	296
4b1	Lid Hoop		4	6'-11"	18
4b2	Lid Hoop		3	4'-7"	9
4b3	Lid Hoop		3	11'-4"	23
EPOXY COATED REINFORCING STEEL - TOTAL					346

LID BENT BAR DETAILS

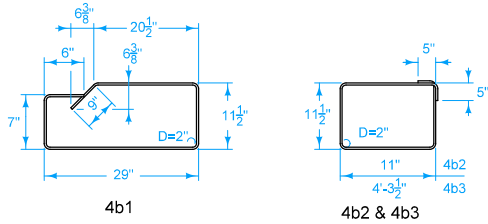

4b1 4b2 & 4b3

NOTE: ALL DIMENSIONS SHOWN OUT TO OUT. D = PIN DIAMETER

LID QUANTITY SUMMARY (SHALLOW)	
Concrete	3.2 CY*
Epoxy Coated Reinforcing Steel	346 LB

* Based on Minimum thickness = 16"

Maximum Pipe Diameter for Pipes at:	
90° Separation	180° Separation
36	48

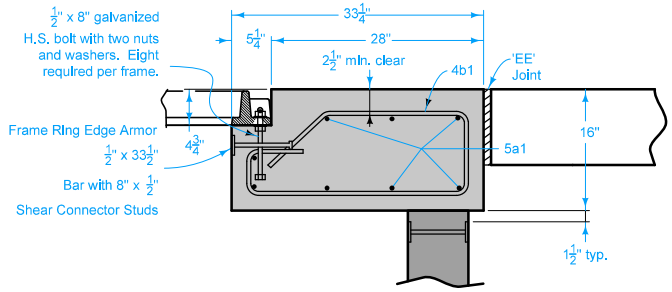

SECTION F-F

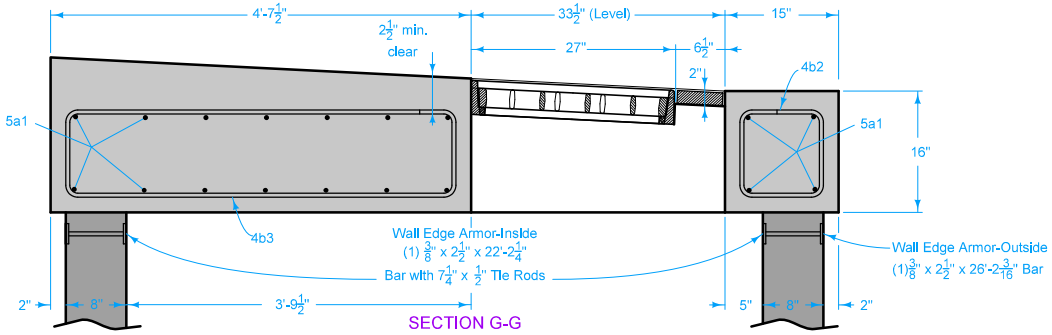

SECTION G-G

LID (SHALLOW)

IOWA DOT

STANDARD ROAD PLAN

REVISION	
4	04-21-15

SW-548

SHEET 4 of 6

REVISIONS: Matched slope of grate to adjacent pavement. Replaced DOT logo with new version.

Brian Smith
APPROVED BY DESIGN METHODS ENGINEER

SINGLE-GRATE BARRIER INTAKE, CIRCULAR

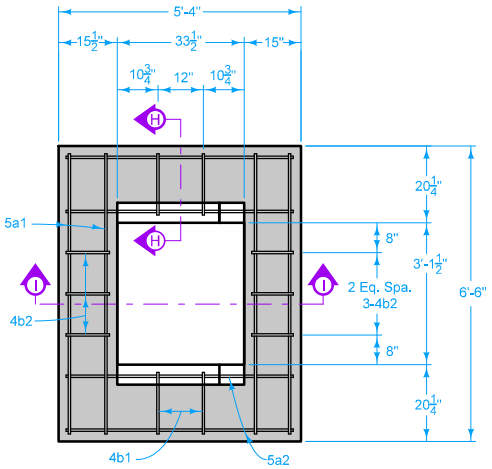

PLAN

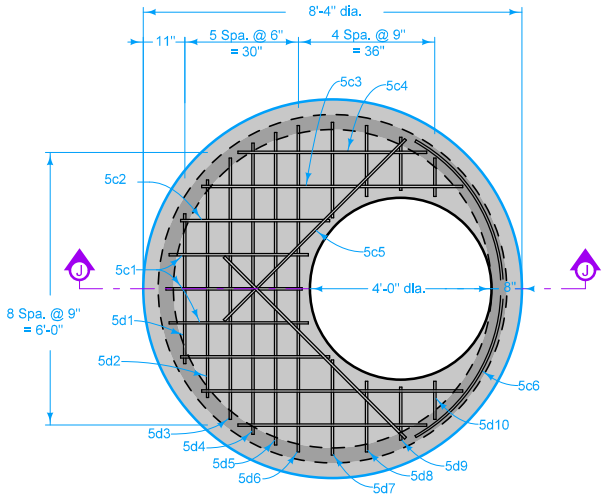

SECTION C-C
INTERMEDIATE LID

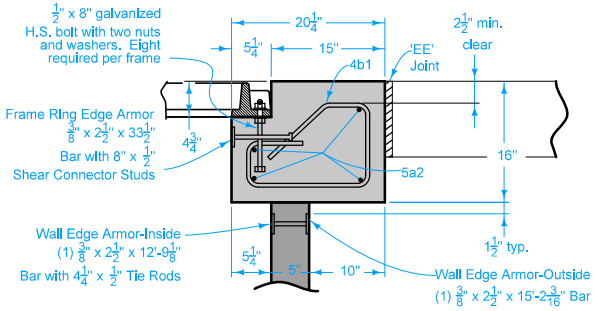

SECTION H-H

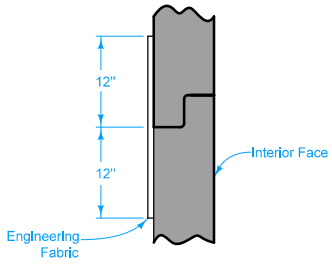

WALL JOINT DETAIL

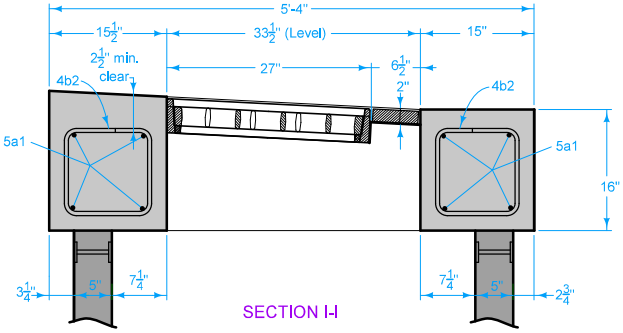

SECTION I-I

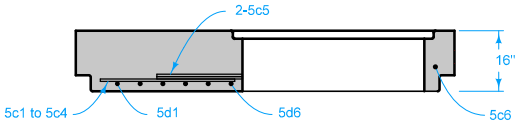

SECTION J-J

LID (DEEP)

LID REINFORCING BAR LIST

EPOXY-COATED

BAR	LOCATION	SHAPE	NO.	LENGTH	WEIGHT
5a1	Lid, Longitudinal	—	8	6'-2"	51
5a2	Lid, Transverse	—	8	5'-0"	42
4b1	Lid Hoop		4	4'-9"	13
4b2	Lid Hoop		6	4'-7"	18
5c1	Intermediate Lid	—	3	3'-0"	9
5c2	Intermediate Lid	—	2	3'-3"	7
5c3	Intermediate Lid	—	2	5'-9"	12
5c4	Intermediate Lid	—	2	4'-2"	9
5c5	Intermediate Lid	—	2	5'-8"	12
5c6	Intermediate Lid	⌒	1	8'-2"	9
5d1	Intermediate Lid	—	1	3'-5"	4
5d2	Intermediate Lid	—	1	4'-10"	5
5d3	Intermediate Lid	—	1	5'-9"	6
5d4	Intermediate Lid	—	1	6'-5"	7
5d5	Intermediate Lid	—	1	6'-10"	7
5d6	Intermediate Lid	—	1	7'-2"	7
5d7	Intermediate Lid	—	2	2'-1"	4
5d8	Intermediate Lid	—	2	1'-6"	3
5d9	Intermediate Lid	—	2	1'-2"	2
5d10	Intermediate Lid	—	2	0'-11"	2
	EPOXY COATED REINFORCING STEEL - TOTAL				229

LID BENT BAR DETAILS

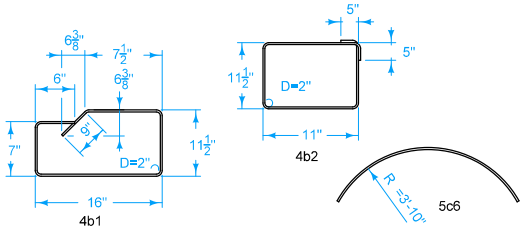

NOTE: ALL DIMENSIONS SHOWN OUT TO OUT. D=PIN DIAMETER

LID QUANTITY SUMMARY
(DEEP)

Concrete - Lid	1.2 CY
Concrete - Intermediate Lid	2.1 CY
Epoxy Coated Reinforcing Steel	229 LB

IOWA DOT

STANDARD ROAD PLAN

REVISION
4 04-21-15

SW-548

SHEET 5 of 6

REVISIONS: Matched slope of grate to adjacent pavement. Replaced DOT logo with new version.

Brian Smith
APPROVED BY DESIGN METHODS ENGINEER

SINGLE-GRATE BARRIER INTAKE, CIRCULAR

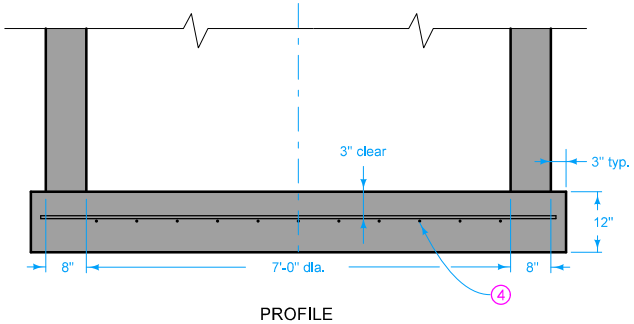

PROFILE

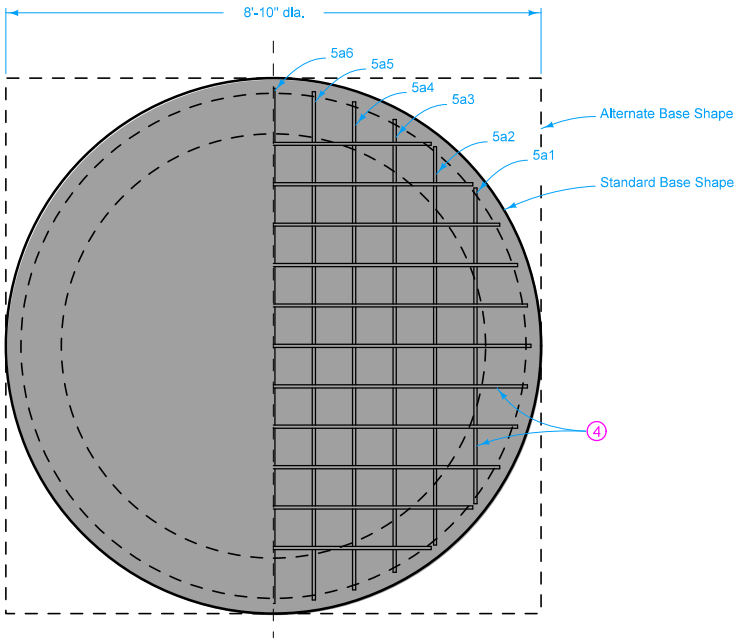

PLAN

BASE

BASE REINFORCING BAR LIST					
EPOXY-COATED					
BAR	LOCATION	SHAPE	NO.	LENGTH	WEIGHT
5a1	Base, Longit. & Transverse	——	4	5'-3"	22
5a2	Base, Longit. & Transverse	——	4	6'-7"	27
5a3	Base, Longit. & Transverse	——	4	7'-6"	31
5a4	Base, Longit. & Transverse	——	4	8'-0"	33
5a5	Base, Longit. & Transverse	——	4	8'-4"	35
5a6	Base, Longit. & Transverse	——	2	8'-6"	18
EPOXY COATED REINFORCING STEEL - TOTAL					166

BASE QUANTITY SUMMARY	
Concrete	2.3 CY *
Epoxy Coated Reinforcing Steel	166 LB *

* Based on Standard Base Shape

(4) #5 at 8 inch centers each direction or equivalent welded wire fabric.

(5) 4el bar length to be pipe diameter plus 12 inches. Place 4el bar inside of vertical reinforcing. Shift main reinforcing bars as required for pipe entrance. Filed cut bars to maintin 3 inch clearance from bottom. Maintain 2 inch clearance from face of walls. Four 4el bars required per pipe entrance.

IOWA DOT

STANDARD ROAD PLAN

REVISION	
4	04-21-15

SW-548

SHEET 6 of 6

REVISIONS: Matched slope of grate to adjacent pavement. Replaced DOT logo with new version.

Brian Smith

APPROVED BY DESIGN METHODS ENGINEER

SINGLE-GRATE BARRIER INTAKE, CIRCULAR