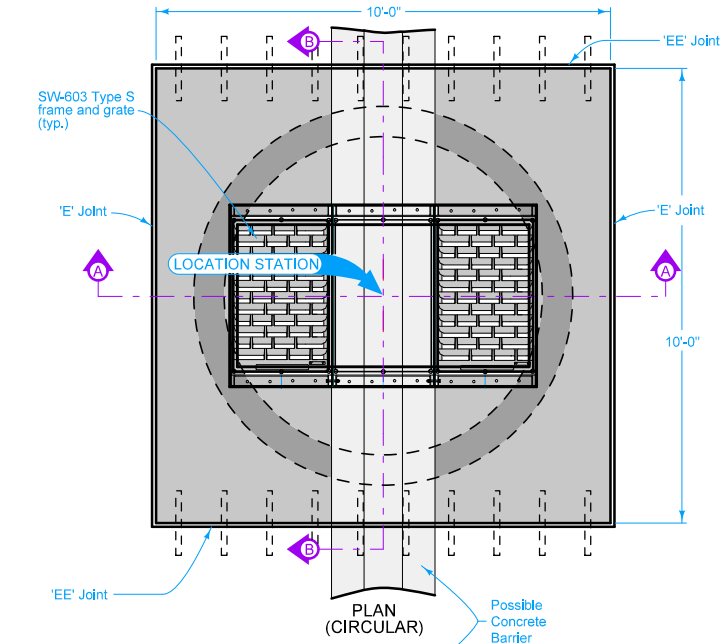

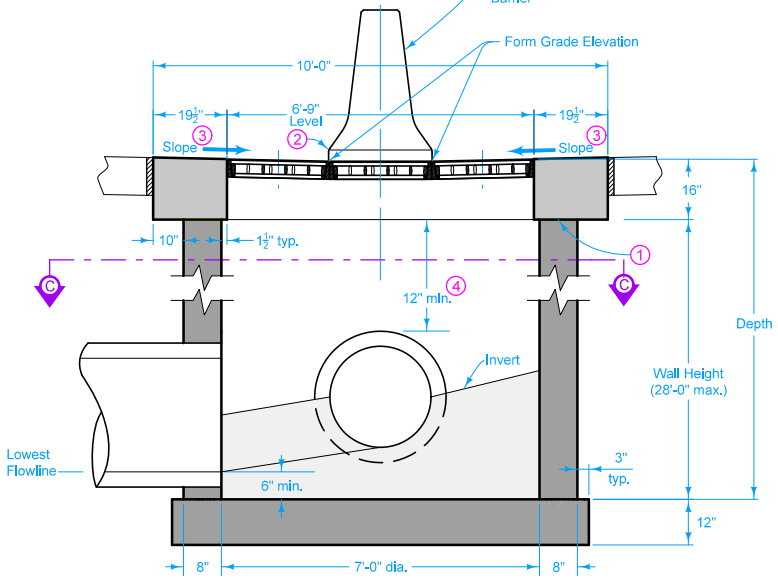

SECTION A-A
(CIRCULAR OPTION)

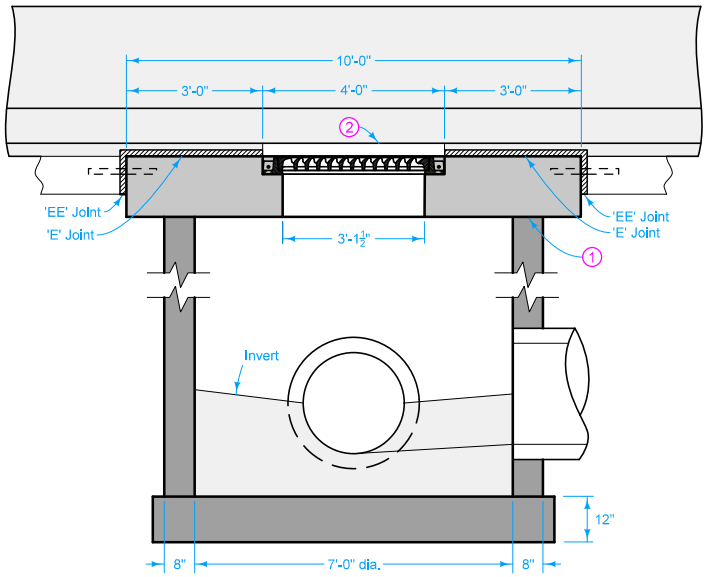

SECTION B-B
(CIRCULAR OPTION)

Unless specified otherwise, the contractor has the option to either install a precast circular structure or construct a rectangular structure.

All plate and edge armor steel to be ASTM A 36, galvanized after fabrication.

Remove center grate before constructing concrete barrier.

Cast frames into intake top so tops of grates are $\frac{1}{4}$" below Form Grade Elevation. Bolt intake frames together on both sides with four $\frac{1}{2}$" x 4" bolts.

For joint details, refer to PV-101.

1. Trowel smooth and place two layers of 30 pound roofing felt to prevent bond.
2. Leave 3 inch opening through barrier over the intake.
3. Match slope of top and grate to adjacent pavement.
4. 12 inch minimum wall height above all pipes.

Possible Contract Item:
Barrier Intake, SW-547

Possible Tabulation:
104-5B

IOWA DOT

STANDARD ROAD PLAN

REVISION	
4	04-21-15

SW-547

SHEET 1 of 7

REVISIONS: Matched slope of grate to adjacent pavement. Replaced DOT logo with new version.

Brian Smith
APPROVED BY DESIGN METHODS ENGINEER

TRIPLE-GRATE BARRIER INTAKE

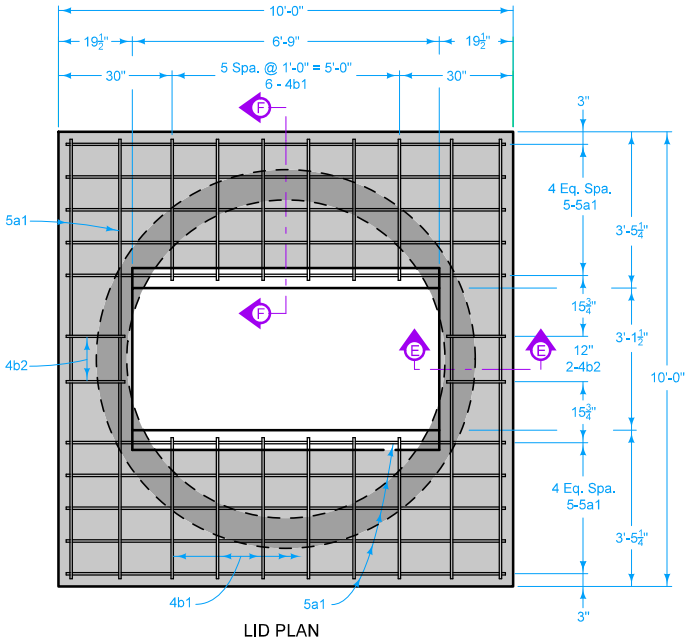

LID PLAN
(CIRCULAR OPTION)

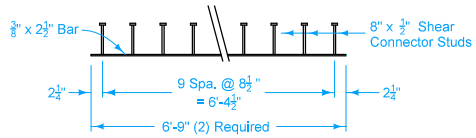

FRAME RING EDGE ARMOR

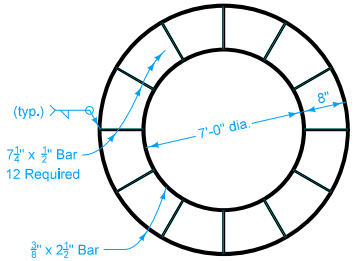

WALL EDGE ARMOR

LID REINFORCING BAR LIST - EPOXY COATED (CIRCULAR OPTION)					
BAR	LOCATION	SHAPE	NO.	LENGTH	WEIGHT
5a1	Lid, Longitudinal & Transverse	—	28	9'-8"	282
4b1	Lid Hoop		12	8'-3"	66
4b2	Lid Hoop		4	5'-4"	14
EPOXY COATED REINFORCING STEEL - TOTAL					362

LID BENT BAR DETAILS (CIRCULAR OPTION)

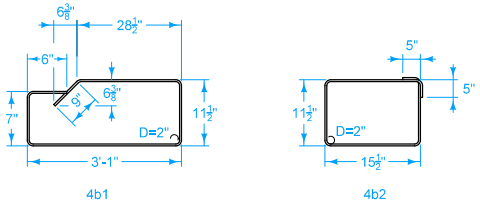

NOTE: ALL DIMENSIONS SHOWN OUT TO OUT. D = PIN DIAMETER

LID QUANTITY SUMMARY (CIRCULAR OPTION)	
Concrete	3.8 CY*
Epoxy Coated Reinforcing Steel	362 LB

* Based on Minimum thickness = 16"

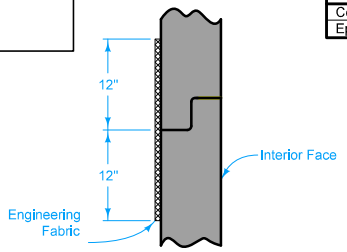

WALL JOINT DETAIL

Maximum Pipe Diameter for Pipes at:	
90° Separation	180° Separation
36"	48"

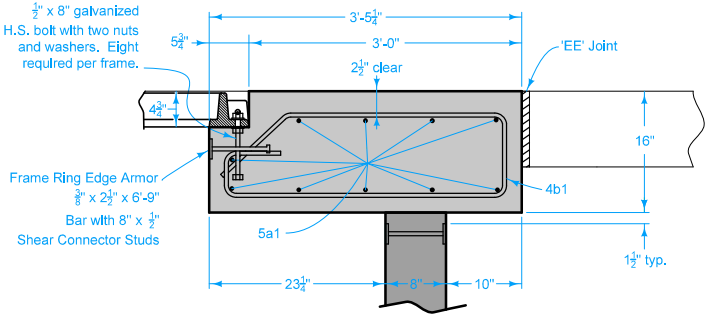

SECTION F-F

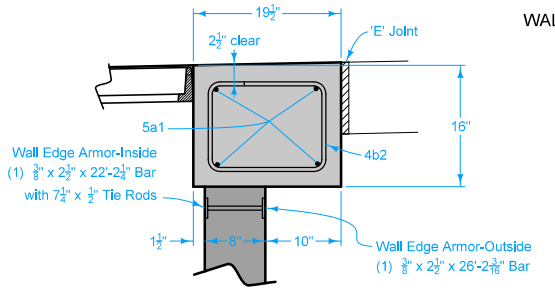

SECTION E-E

LID (CIRCULAR OPTION)

IOWA DOT

STANDARD ROAD PLAN

REVISION	
4	04-21-15

SW-547

SHEET 2 of 7

REVISIONS: Matched slope of grate to adjacent pavement. Replaced DOT logo with new version.

Brian Smith
APPROVED BY DESIGN METHODS ENGINEER

TRIPLE-GRATE BARRIER INTAKE

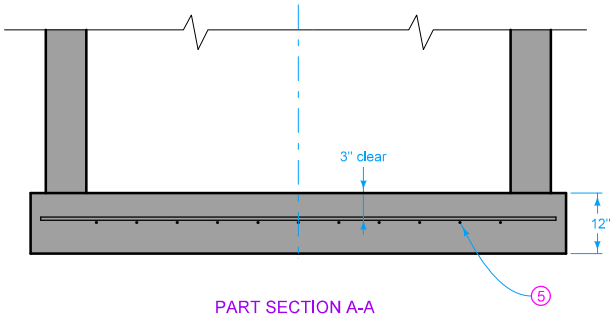

PART SECTION A-A

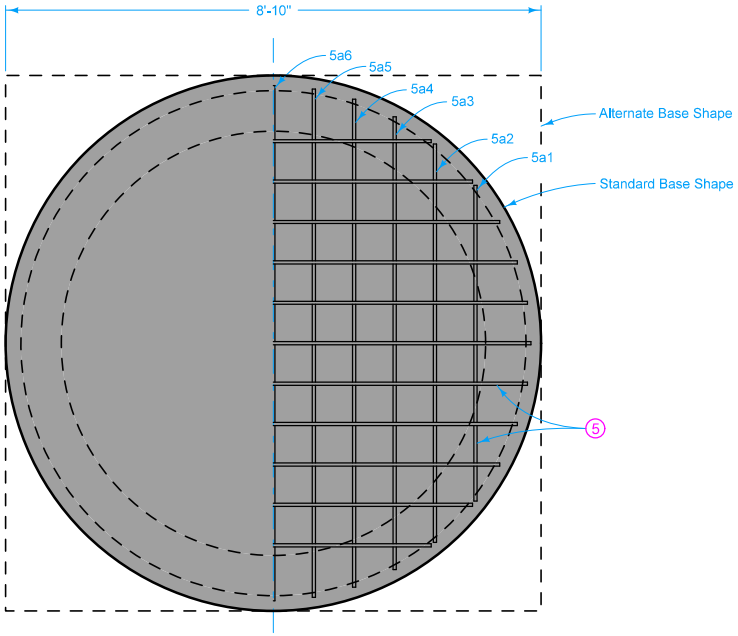

BASE PLAN
(CIRCULAR OPTION)

BASE (CIRCULAR OPTION)

BASE REINFORCING BAR LIST - EPOXY COATED (CIRCULAR OPTION)					
BAR	LOCATION	SHAPE	NO.	LENGTH	WEIGHT
5a1	Base, Longit. & Transverse	——	4	5'-3"	22
5a2	Base, Longit. & Transverse	——	4	6'-7"	27
5a3	Base, Longit. & Transverse	——	4	7'-6"	31
5a4	Base, Longit. & Transverse	——	4	8'-0"	33
5a5	Base, Longit. & Transverse	——	4	8'-4"	35
5a6	Base, Longit. & Transverse	——	2	8'-6"	18
EPOXY COATED REINFORCING STEEL - TOTAL					166

BASE QUANTITY SUMMARY (CIRCULAR OPTION)	
Concrete	2.3 CY*
Epoxy Coated Reinforcing Steel	166 LB*

* Based on Standard Base Shape

5 #5 at 8 inch centers each direction or equivalent welded wire fabric.

IOWA DOT

STANDARD ROAD PLAN

REVISION 4 04-21-15

SW-547

SHEET 3 of 7

REVISIONS: Matched slope of grate to adjacent pavement. Replaced DOT logo with new version.

Brian Smith
APPROVED BY DESIGN METHODS ENGINEER

TRIPLE-GRATE BARRIER INTAKE

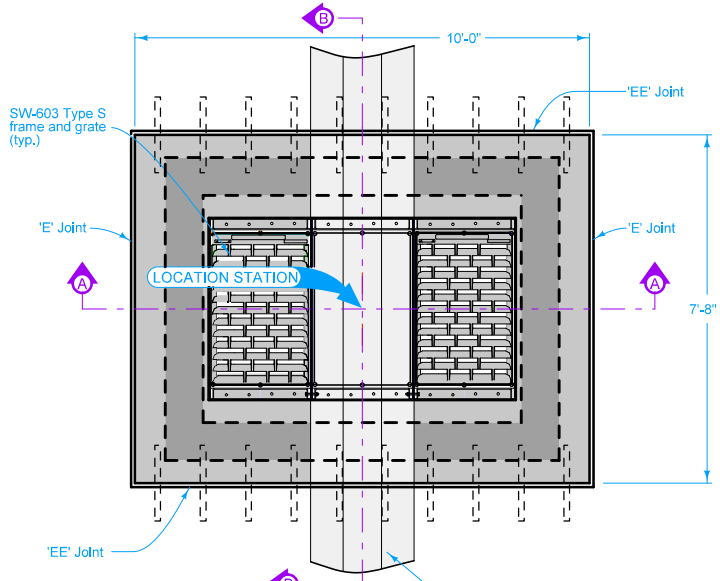

PLAN
(RECTANGULAR)

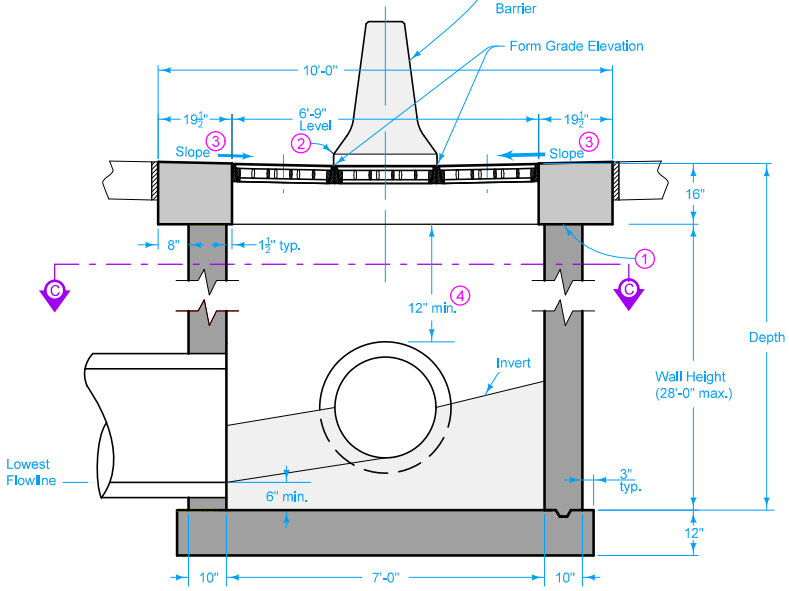

SECTION A-A
(RECTANGULAR OPTION)

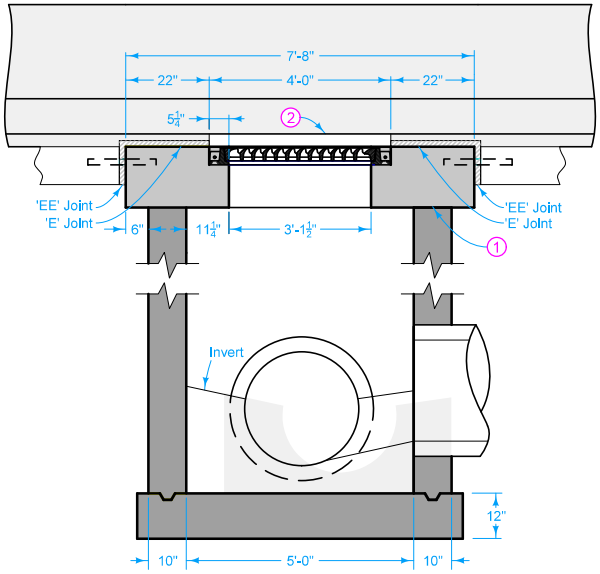

SECTION B-B
(RECTANGULAR OPTION)

1. Trowel smooth and place two layers of 30 pound roofing felt to prevent bond.
2. Leave 3 inch opening through barrier over the intake.
3. Match slope of top and grate to adjacent pavement.
4. 12 inch minimum wall height above all pipes.

IOWA DOT

STANDARD ROAD PLAN

REVISION	
4	04-21-15

SW-547

SHEET 4 of 7

REVISIONS: Matched slope of grate to adjacent pavement. Replaced DOT logo with new version.

Brian Smith
APPROVED BY DESIGN METHODS ENGINEER

TRIPLE-GRATE BARRIER INTAKE

LID REINFORCING BAR LIST - EPOXY COATED (RECTANGULAR OPTION)					
BAR	LOCATION	SHAPE	NO.	LENGTH	WEIGHT
5a1	Lid, Longitudinal		8	10'-2"	85
5a2	Lid, Transverse		10	12'-6"	130
5a3	Lid, Interior, Corners		4	3'-0"	13
4b1	Lid Hoop		14	5'-11"	55
4b2	Lid Hoop		8	5'-4"	29
	EPOXY COATED REINFORCING STEEL - TOTAL				312

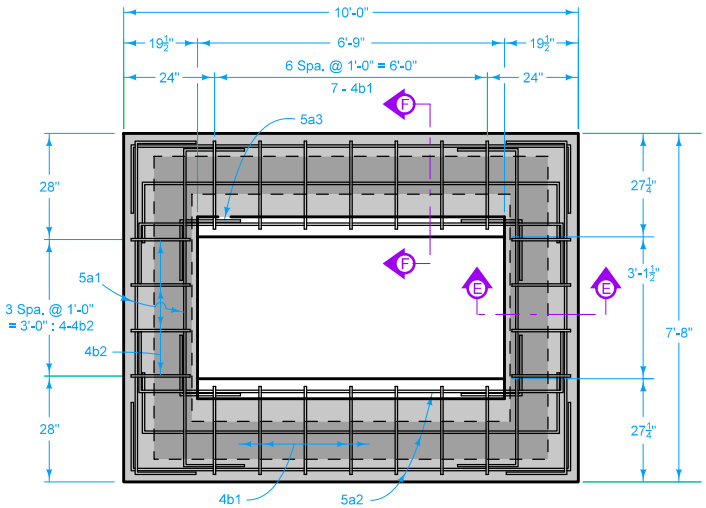

LID PLAN
(RECTANGULAR OPTION)

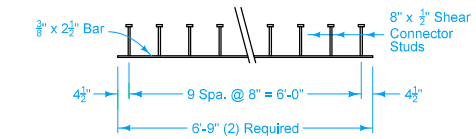

FRAME RING EDGE ARMOR

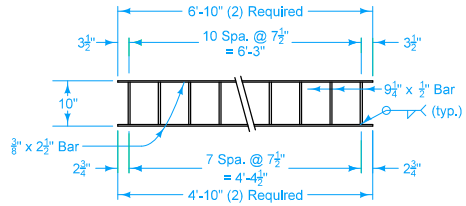

WALL EDGE ARMOR

LID BENT BAR DETAILS (RECTANGULAR OPTION)

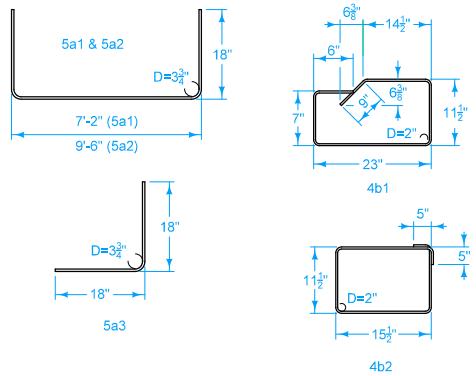

NOTE: ALL DIMENSIONS SHOWN OUT TO OUT. D = PIN DIAMETER

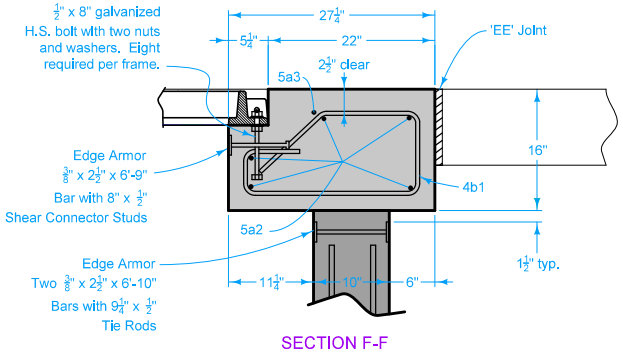

SECTION F-F

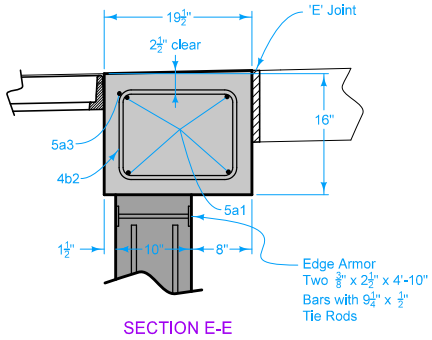

SECTION E-E

LID (RECTANGULAR OPTION)

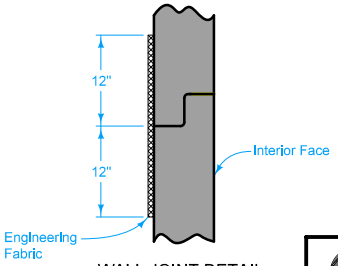

WALL JOINT DETAIL

LID QUANTITY SUMMARY (RECTANGULAR OPTION)	
Concrete	2.7 CY
Epoxy Coated Reinforcing Steel	312 LB

IOWA DOT

STANDARD ROAD PLAN

REVISION	
4	04-21-15

SW-547

SHEET 5 of 7

REVISIONS: Matched slope of grate to adjacent pavement. Replaced DOT logo with new version.

Brian Smith
APPROVED BY DESIGN METHODS ENGINEER

TRIPLE-GRATE BARRIER INTAKE

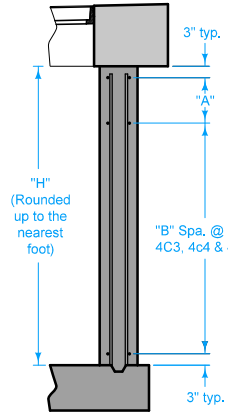

PART SECTION A-A
(Where H = 3' to 7')

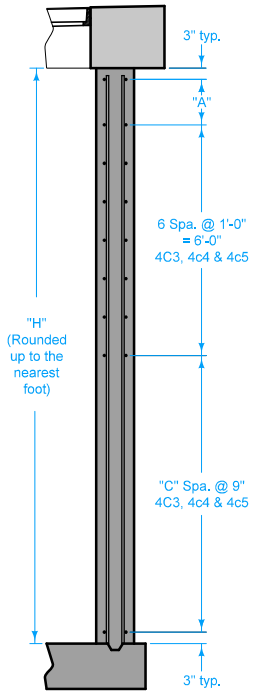

PART SECTION A-A
(Where H = 8' to 15')

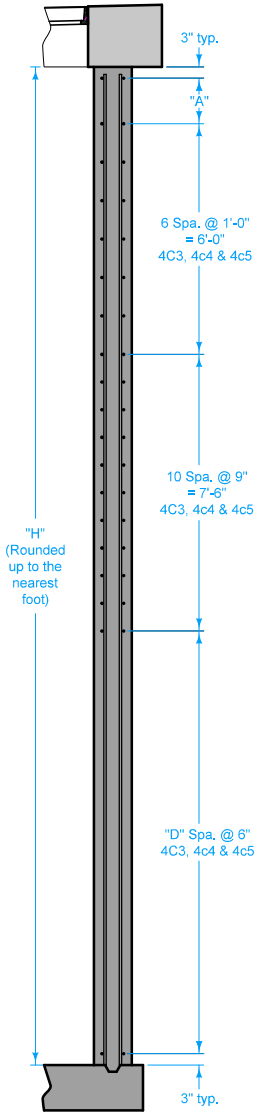

PART SECTION A-A
(Where H = 16' to 28')

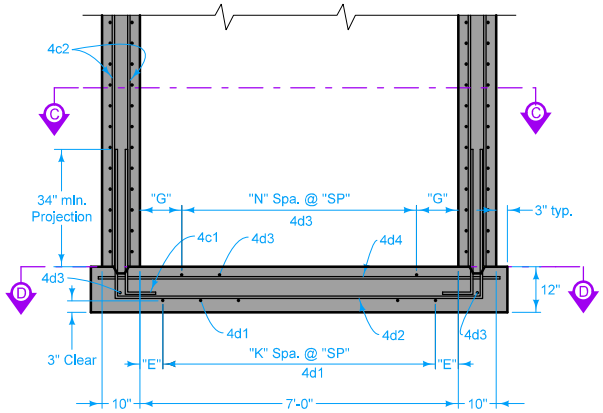

SECTION A-A

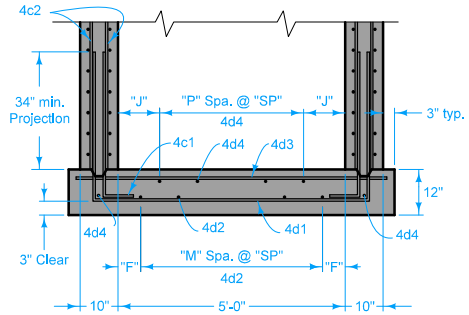

SECTION B-B

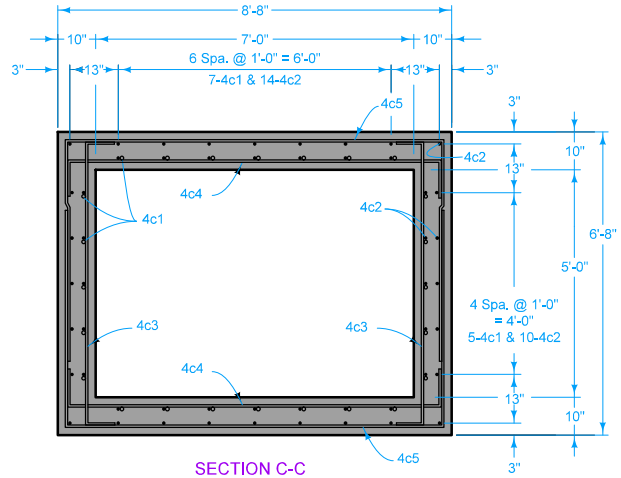

SECTION C-C

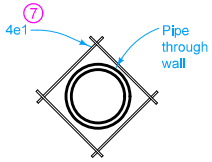

PIPE REINFORCING

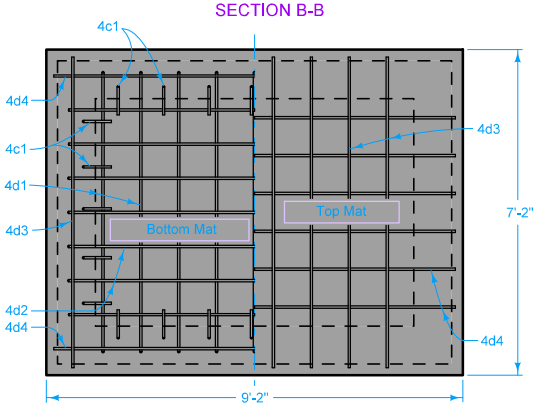

SECTION D-D
BASE REINFORCING

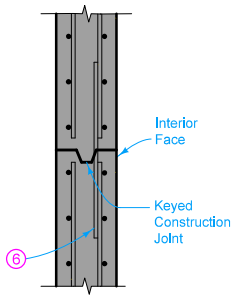

C.I.P. Wall
CONSTRUCTION JOINT

6 Install one set of 4r1 x 3'-0" dowel bars @ 12 inch spacing at any wall joints. Twenty-eight 4r1 bars required per joint, total weight = 56 lbs.

7 4e1 bar length to be pipe diameter plus 12 inches. Place 4e1 bar inside of vertical reinforcing. Shift main reinforcing bars as required for pipe entrance. Field cut bars to maintain 3 inch clearance from bottom and 2 inch clearance from face of walls. Eight 4e1 bars required per pipe entrance.

WALLS (RECTANGULAR OPTION)

IOWA DOT

STANDARD ROAD PLAN

REVISION	
4	04-21-15

SW-547

SHEET 6 of 7

REVISIONS: Matched slope of grate to adjacent pavement. Replaced DOT logo with new version.

Brian Smith
APPROVED BY DESIGN METHODS ENGINEER

TRIPLE-GRATE BARRIER INTAKE

VARIABLE DIMENSIONS AND QUANTITIES FOR RECTANGULAR OPTION

Dimensions						Bar List																																				Quantities				
	(8)					4c1		4c2		4c3 (9)					4c4 (9)					4c5 (9)					4d1				4d2				4d3				4d4				Concrete - Cu. Yds.				Steel
"H"	"A"	"E"	"F"	"G"	"J"	No.	L	No.	L	No. of Spaces			NO.	L	No. of Spaces			No.	L	No. of Spaces			NO.	L	SP	"K"	No.	L	SP	"M"	No.	L	SP	"N"	No.	L	SP	"P"	No.	L	Base	Lid	Walls	Total	(10)
(Ft.)	(In.)	(In.)	(In.)	(In.)	(In.)					"B"	"C"	"D"			"B"	"C"	"D"			"B"	"C"	"D"																							Total lbs.
3	6	2"	0"	7"	5"	24	4'-3"	--	–	2	--	–	8	7'-8"	2	–	–	8	9'-8"	2	--	–	8	17'-0"	10"	8	9	13'-5"	10"	6	7	15'-5"	10"	7	10	6'-10"	10"	5	8	8'-10"	2.4	2.7	2.5	7.7	810
4	6	2"	0"	7"	5"	24	4'-3"	52	3'-10"	3	--	–	10	7'-8"	3	–	–	10	9'-8"	3	--	–	10	17'-0"	10"	8	9	13'-5"	10"	6	7	15'-5"	10"	7	10	6'-10"	10"	5	8	8'-10"	2.4	2.7	3.4	8.5	989
5	6	2"	0"	7"	5"	24	4'-3"	52	4'-10"	4	--	–	12	7'-8"	4	–	–	12	9'-8"	4	--	–	12	17'-0"	10"	8	9	13'-5"	10"	6	7	15'-5"	10"	7	10	6'-10"	10"	5	8	8'-10"	2.4	2.7	4.2	9.4	1,068
6	6	2"	0"	7"	5"	24	4'-3"	52	5'-10"	5	--	–	14	7'-8"	5	–	–	14	9'-8"	5	--	–	14	17'-0"	10"	8	9	13'-5"	10"	6	7	15'-5"	10"	7	10	6'-10"	10"	5	8	8'-10"	2.4	2.7	5.1	10.2	1,150
7	6	2"	2"	6"	6"	24	4'-3"	52	6'-10"	6	--	–	16	7'-8"	6	–	–	16	9'-8"	6	--	–	16	17'-0"	8"	10	11	13'-5"	8"	7	8	15'-5"	8"	9	12	6'-10"	8"	6	9	8'-10"	2.4	2.7	5.9	11.0	1,273
8	9	2"	2"	6"	6"	24	4'-3"	52	7'-10"	6	1	–	18	7'-8"	6	1	–	18	9'-8"	6	1	–	18	17'-0"	8"	10	11	13'-5"	8"	7	8	15'-5"	8"	9	12	6'-10"	8"	6	9	8'-10"	2.4	2.7	6.8	11.9	1,353
9	12	2"	2"	6"	6"	24	4'-3"	52	8'-10"	6	2	–	20	7'-8"	6	2	–	20	9'-8"	6	2	–	20	17'-0"	8"	10	11	13'-5"	8"	7	8	15'-5"	8"	9	12	6'-10"	8"	6	9	8'-10"	2.4	2.7	7.6	12.7	1,434
10	6	2"	2"	6"	6"	24	4'-3"	52	9'-10"	6	4	–	24	7'-8"	6	4	–	24	9'-8"	6	4	–	24	17'-0"	8"	10	11	13'-5"	8"	7	8	15'-5"	8"	9	12	6'-10"	8"	6	9	8'-10"	2.4	2.7	8.4	13.6	1,562
11	9	2"	2"	6"	6"	24	4'-3"	52	10'-10"	6	5	–	26	7'-8"	6	5	–	26	9'-8"	6	5	–	26	17'-0"	8"	10	11	13'-5"	8"	7	8	15'-5"	8"	9	12	6'-10"	8"	6	9	8'-10"	2.4	2.7	9.3	14.4	1,641
12	12	2"	2"	6"	6"	24	4'-3"	52	11'-10"	6	6	–	28	7'-8"	6	6	–	28	9'-8"	6	6	–	28	17'-0"	8"	10	11	13'-5"	8"	7	8	15'-5"	8"	9	12	6'-10"	8"	6	9	8'-10"	2.4	2.7	10.1	15.3	1,722
13	6	2"	2"	6"	6"	24	4'-3"	52	12'-10"	6	8	–	32	7'-8"	6	8	–	32	9'-8"	6	8	–	32	17'-0"	8"	10	11	13'-5"	8"	7	8	15'-5"	8"	9	12	6'-10"	8"	6	9	8'-10"	2.4	2.7	11.0	16.1	1,849
14	9	0"	0"	3"	3"	24	4'-3"	52	13'-10"	6	9	–	34	7'-8"	6	9	–	34	9'-8"	6	9	–	34	17'-0"	6"	14	15	13'-5"	6"	10	11	15'-5"	6"	13	16	6'-10"	6"	12	15	8'-10"	2.4	2.7	11.8	17.0	2,050
15	12	0"	0"	3"	3"	24	4'-3"	52	14'-10"	6	10	–	36	7'-8"	6	10	–	36	9'-8"	6	10	–	36	17'-0"	6"	14	15	13'-5"	6"	10	11	15'-5"	6"	13	16	6'-10"	6"	12	15	8'-10"	2.4	2.7	12.7	17.8	2,129
16	12	0"	0"	3"	3"	24	4'-3"	52	15'-10"	6	10	2	40	7'-8"	6	10	2	40	9'-8"	6	10	2	40	17'-0"	6"	14	15	13'-5"	6"	10	11	15'-5"	6"	13	16	6'-10"	6"	12	15	8'-10"	2.4	2.7	13.5	18.6	2,256
17	12	0"	0"	3"	3"	24	4'-3"	52	16'-10"	6	10	4	44	7'-8"	6	10	4	44	9'-8"	6	10	4	44	17'-0"	6"	14	15	13'-5"	6"	10	11	15'-5"	6"	13	16	6'-10"	6"	12	15	8'-10"	2.4	2.7	14.4	19.5	2,383
18	12	0"	0"	3"	3"	24	4'-3"	52	17'-10"	6	10	6	48	7'-8"	6	10	6	48	9'-8"	6	10	6	48	17'-0"	6"	14	15	13'-5"	6"	10	11	15'-5"	6"	13	16	6'-10"	6"	12	15	8'-10"	2.4	2.7	15.2	20.3	2,509
19	12	0"	0"	3"	3"	24	4'-3"	52	18'-10"	6	10	8	52	7'-8"	6	10	8	52	9'-8"	6	10	8	52	17'-0"	6"	14	15	13'-5"	6"	10	11	15'-5"	6"	13	16	6'-10"	6"	12	15	8'-10"	2.4	2.7	16.0	21.2	2,636
20	12	0"	0"	3"	3"	24	4'-3"	52	19'-10"	6	10	10	56	7'-8"	6	10	10	56	9'-8"	6	10	10	56	17'-0"	6"	14	15	13'-5"	6"	10	11	15'-5"	6"	13	16	6'-10"	6"	12	15	8'-10"	2.4	2.7	16.9	22.0	2,763
21	12	0"	0"	3"	3"	24	4'-3"	52	20'-10"	6	10	12	60	7'-8"	6	10	12	60	9'-8"	6	10	12	60	17'-0"	6"	14	15	13'-5"	6"	10	11	15'-5"	6"	13	16	6'-10"	6"	12	15	8'-10"	2.4	2.7	17.7	22.9	2,888
22	12	0"	0"	3"	3"	24	4'-3"	52	21'-10"	6	10	14	64	7'-8"	6	10	14	64	9'-8"	6	10	14	64	17'-0"	6"	14	15	13'-5"	6"	10	11	15'-5"	6"	13	16	6'-10"	6"	12	15	8'-10"	2.4	2.7	18.6	23.7	3,015
23	12	0"	0"	3"	3"	24	4'-3"	52	22'-10"	6	10	16	68	7'-8"	6	10	16	68	9'-8"	6	10	16	68	17'-0"	6"	14	15	13'-5"	6"	10	11	15'-5"	6"	13	16	6'-10"	6"	12	15	8'-10"	2.4	2.7	19.4	24.6	3,141
24	12	0"	0"	3"	3"	24	4'-3"	52	23'-10"	6	10	18	72	7'-8"	6	10	18	72	9'-8"	6	10	18	72	17'-0"	6"	14	15	13'-5"	6"	10	11	15'-5"	6"	13	16	6'-10"	6"	12	15	8'-10"	2.4	2.7	20.3	25.4	3,269
25	12	0"	0"	3"	3"	24	4'-3"	52	24'-10"	6	10	20	76	7'-8"	6	10	20	76	9'-8"	6	10	20	76	17'-0"	6"	14	15	13'-5"	6"	10	11	15'-5"	6"	13	16	6'-10"	6"	12	15	8'-10"	2.4	2.7	21.1	26.3	3,395
26	12	0"	0"	3"	3"	24	4'-3"	52	25'-10"	6	10	22	80	7'-8"	6	10	22	80	9'-8"	6	10	22	80	17'-0"	6"	14	15	13'-5"	6"	10	11	15'-5"	6"	13	16	6'-10"	6"	12	15	8'-10"	2.4	2.7	22.0	27.1	3,521
27	12	0"	0"	3"	3"	24	4'-3"	52	26'-10"	6	10	24	84	7'-8"	6	10	24	84	9'-8"	6	10	24	84	17'-0"	6"	14	15	13'-5"	6"	10	11	15'-5"	6"	13	16	6'-10"	6"	12	15	8'-10"	2.4	2.7	22.8	27.9	3,647
28	12	0"	0"	3"	3"	24	4'-3"	52	27'-10"	6	10	26	88	7'-8"	6	10	26	88	9'-8"	6	10	26	88	17'-0"	6"	14	15	13'-5"	6"	10	11	15'-5"	6"	13	16	6'-10"	6"	12	15	8'-10"	2.4	2.7	23.7	28.8	3,774

BENT BAR DETAILS (RECTANGULAR OPTION)

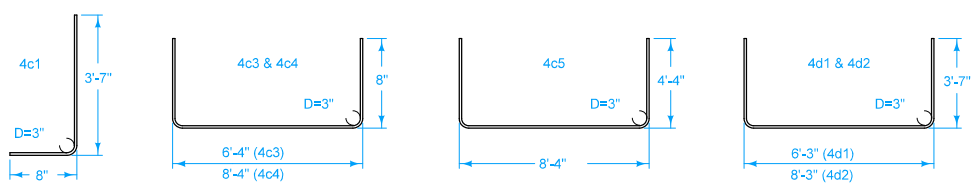

NOTE: ALL DIMENSIONS SHOWN OUT TO OUT. D = PIN DIAMETER

(8) A = First bar spacing at top of wall. Minimum spacing is 3 inches. Maximum spacing is 12 inches. Adjust as necessary.

(9) See Section A-A on sheet 2 for spacing.

(10) Quantity includes 312 lbs. for lid.

IOWA DOT

STANDARD ROAD PLAN

REVISION 4 04-21-15

SW-547

SHEET 7 of 7

REVISIONS: Matched slope of grate to adjacent pavement. Replaced DOT logo with new version.

Brian Smith

APPROVED BY DESIGN METHODS ENGINEER

TRIPLE-GRATE BARRIER INTAKE

REINFORCEMENT (RECTANGULAR OPTION)