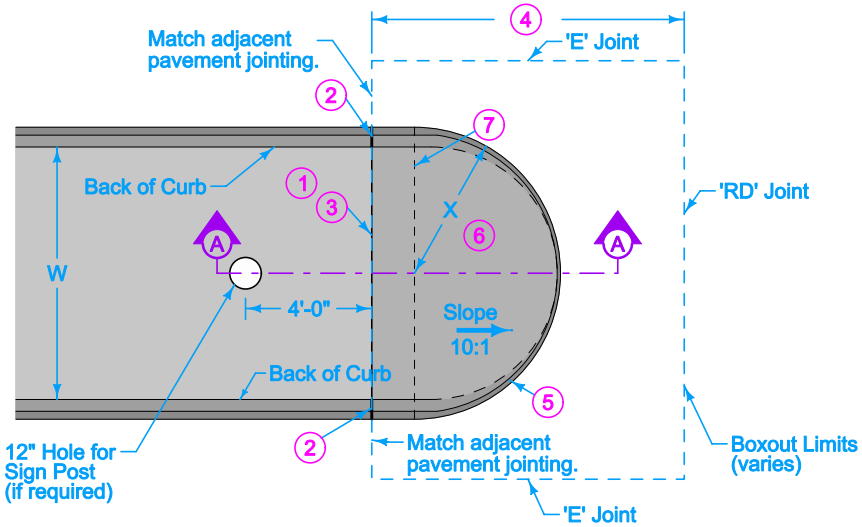

6" STANDARD
PLAN

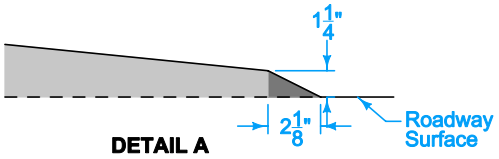

DETAIL A

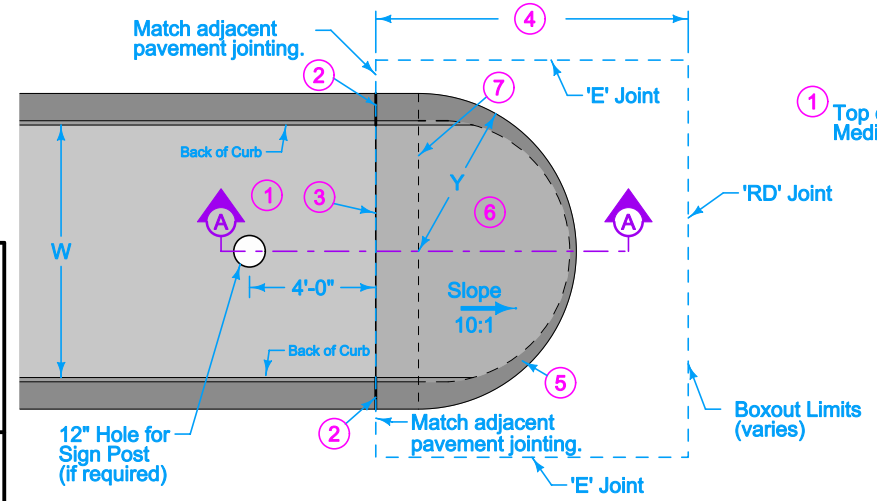

6" SLOPED
PLAN

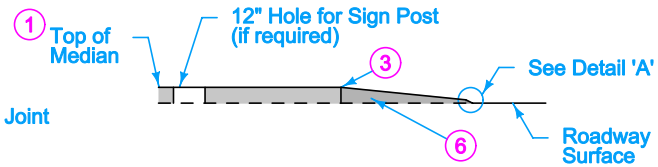

SECTION A-A

1. For details of paved median, see contract documents.
2. 'EE' Joint. Expansion joints located at the end of normal curb.
3. 'E'Joint. If median is paved, place expansion joints at the end of normal curb.
4. If boxout length is less than or equal to 12 feet, provide 'C' Joint. If boxout length is greater than 12 feet, provide 'RD' joint.
5. Special shaping of curb.
6. Quantities for ramped median nose area is included in roadway pavement quantities.
7. When X or Y is 4 feet or greater the expansion joints will be at the begining of the rounded median.

W = Width from back of curb to back of curb

X = W/2 + 7.5"

Y = W/2 + 12"

RAMPED MEDIAN NOSE
(Median Width 8'-0" or Less)

SUDAS	Iowa Department of Transportation	REVISION: New 04-19-11
FIGURE 7010.104	STANDARD ROAD PLAN	PV-104 SHEET 1 of 1

REVISIONS: New. Previously page 2 of PV-2.

Paul D. Wiegand — SUDAS DIRECTOR
Deanna Maifeld — DESIGN METHODS ENGINEER

RAMPED MEDIAN NOSE

FIGURE 7010.104 | SHEET 1 OF 1