Lighting

LI

SECTION

Lighting

LI

NO.	DATE	TITLE
LI-101	10-21-14	Light Pole Location
LI-103	10-21-14	Conduit and Precast Handholes
LI-104	10-21-14	Junction box (cast Iron)
LI-110	04-19-16	Lighting Tower
LI-120	10-21-14	Underdeck Lighting
LI-130	10-21-14	Temporary Floodlighting Luminaires
LI-141	10-21-14	Electrical Installation (Roadway Ducts)
LI-142	04-21-15	Electrical Installation (Bases)
LI-151	10-21-14	Control Cabinet (Pole-Mounted)
LI-152	10-21-14	Control Cabinet (Pad-Mounted)
LI-201	04-18-17	Light Pole Foundation
LI-210	10-21-14	Transformer Base (Cast Aluminum)
LI-211	10-20-15	Slip-Base for Light Poles

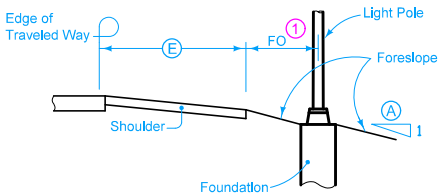

TYPE 1

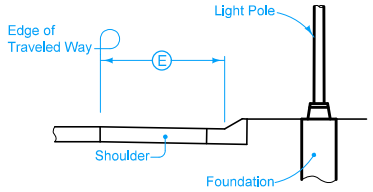

TYPE 2

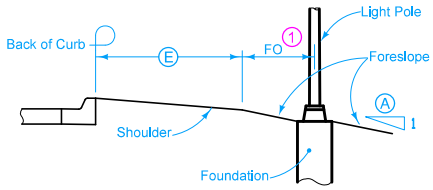

TYPE 3

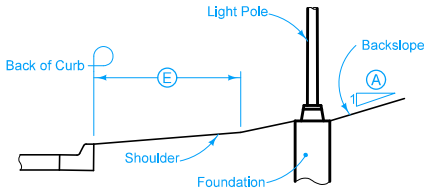

TYPE 4

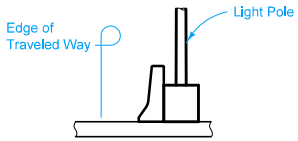

TYPE 5
Concrete Barrier Rail or Bridge Rail

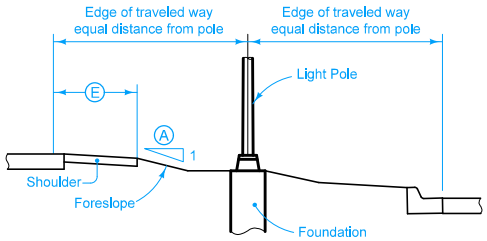

TYPE 6

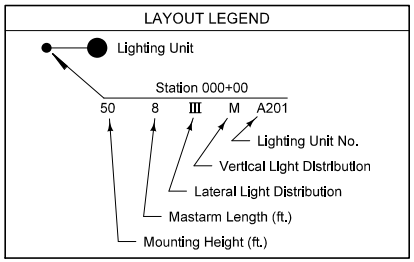

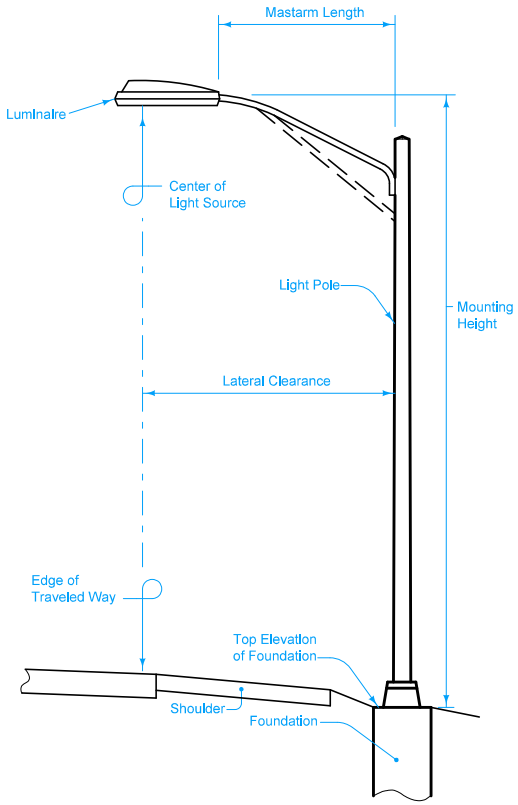

TYPICAL POLE INSTALLATION

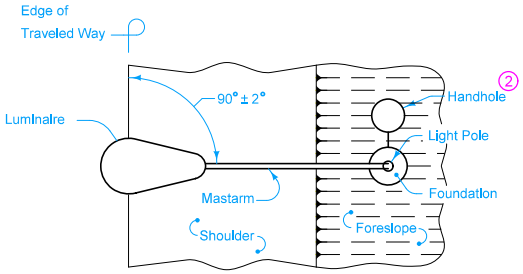

ORIENTATION OF MASTARM

Mounting Height (MH) is the dimension measured vertically from the center of end of mastarm to the top of foundation as shown. Allowable tolerance on MH for final installation is from +3 inches to -3 inches.

Overhang (OH) is the horizontal dimension from the edge of traveled way to the Luminaire center. Unless specifically designated otherwise, design OH is zero, with an allowable tolerance of ±6 inches.

Lateral clearance will be controlled by luminaire dimensions, and by specified overhang and mastarm dimensions. Unless directed otherwise by the Engineer, clearance of adjacent poles having identical mastarm lengths is not to vary by more than ±3 inches.

Orientation: If not specified otherwise, angular orientation of mastarm is 90° ± 2° to the respective centerlines or baselines, or to the respective edges of the pavement along acceleration and deceleration tapers.

Twin-Mastarm Angles: Included angle is to provide required orientation within the nearest 5 degrees increment. Anticipated angle will be shown on the detail plans.

Edge of traveled way is considered to be the edge line.

1 Foundation offset (FO) is measured to the centerline of foundation. If the foreslope is steeper then 6:1, FO should be between 2 and 3 feet. If the foreslope is 6:1 or flatter, the FO will vary based on specified mastarm length.

2 Slip-base only. May be placed behind pole. Meet the requirements of Article 2523.03, O, of the Standard Specifications.

Possible Contract Item:
Lighting Poles

Possible Tabulation:
108-1

IOWA DOT

REVISION	
New	10-21-14

STANDARD ROAD PLAN

LI-101

SHEET 1 of 1

REVISIONS: New. Replaces RM-31 and RM-32.

Brian Smith
APPROVED BY DESIGN METHODS ENGINEER

LIGHT POLE LOCATION

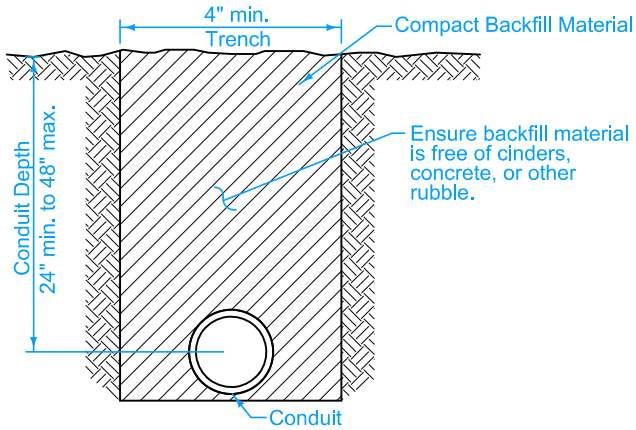

CONDUIT IN TRENCH

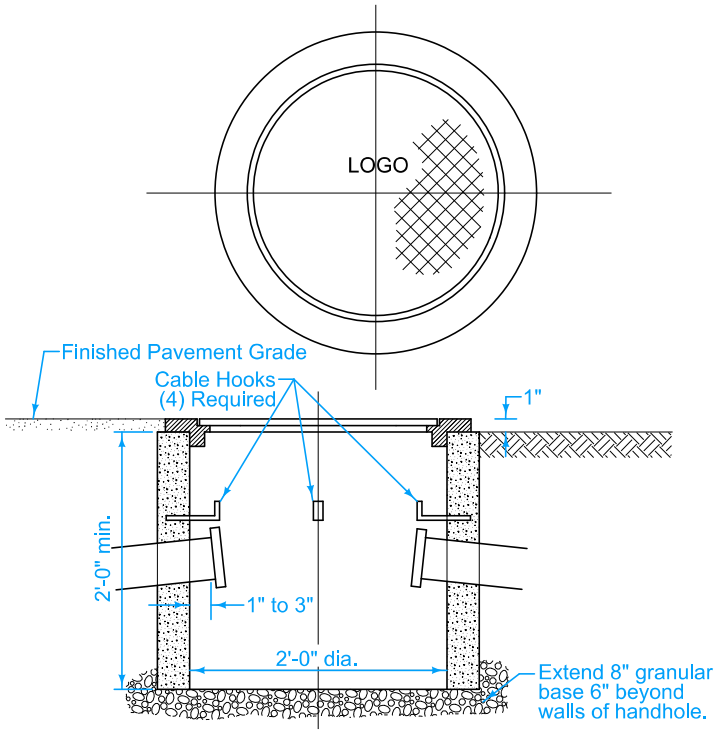

PRECAST CONCRETE HANDHOLE (TYPE I)

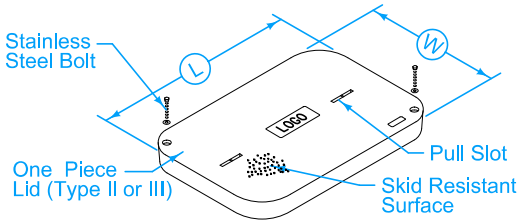

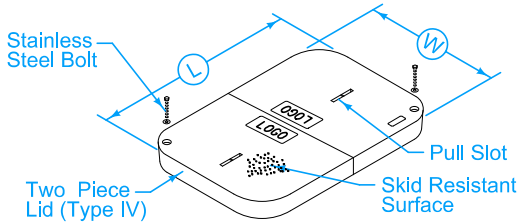

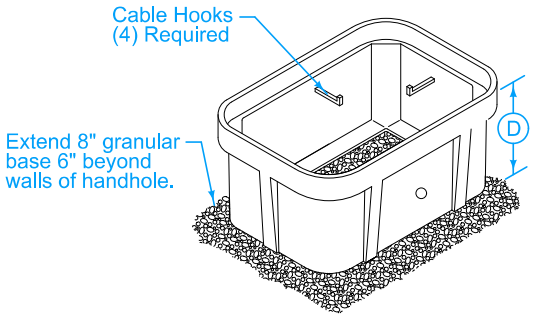

PRECAST CONCRETE COMPOSITE HANDHOLE

HANDHOLE DIMENSIONS TABLE (NOMINAL)			
TYPE	L	W	D
II	30"	17"	24"
III	36"	24"	30"
IV	48"	30"	36"

SUDAS | IOWA DOT

REVISION: New 10-21-14

FIGURE 8010.103 | STANDARD ROAD PLAN | LI-103

SHEET 1 of 1

REVISIONS: New.

Paul D. Wiegand, SUDAS DIRECTOR | Brian Smith, DESIGN METHODS ENGINEER

CONDUIT AND PRECAST HANDHOLES

FIGURE 8010.103 | SHEET 1 OF 1

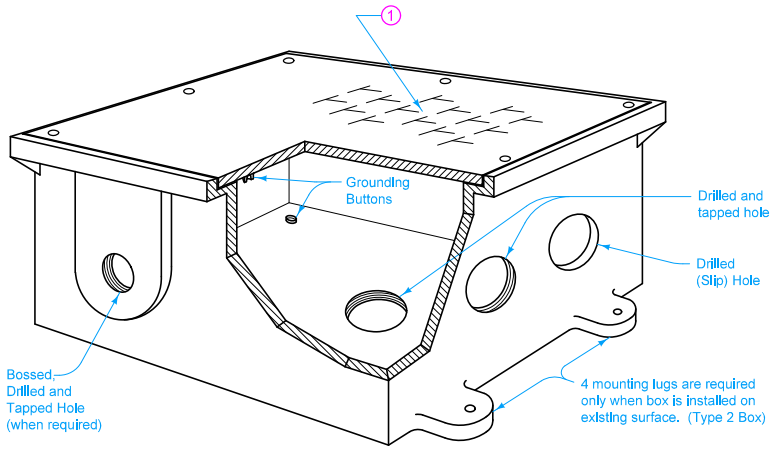

JUNCTION BOX

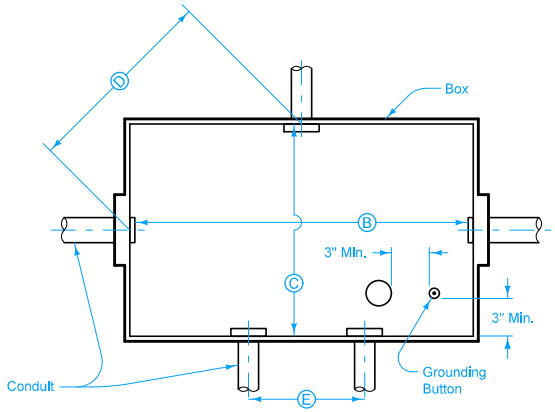

JUNCTION BOX REQUIREMENTS

For straight pulls	Min. 'B' = 8 diameters of larger conduit
For opposite wall	Min. 'C' = 6 diameters of larger conduit
For right angle turns	Min. 'D' = 8 diameters of larger conduit

Alternate design may be submitted to the Engineer for approval.

Approved galvanized steel covers may be substituted for cast iron.

Fit grounding buttons with 3/8" x 3/4" brass screws unless specified otherwise.

Type, size and location of holes will be shown on the plans.

Use slip holes only for junction box drains unless specified otherwise.

(1) In locations subject to pedestrian traffic, install junction box covers with approved anti-skid pattern.

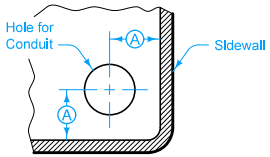

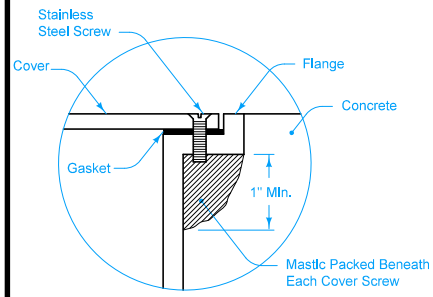

TYPE 1

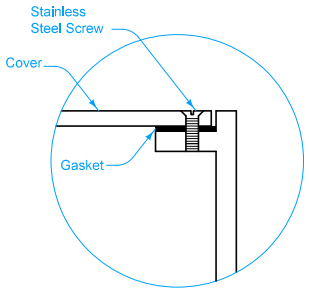

TYPE 2

CORNER DETAILS OF JUNCTION BOX

CONDUIT LOCATION FOR LOCK NUT AND BUSHING CLEARANCE - 'A'										
Conduit Size	$\frac{1}{2}$"	$\frac{3}{4}$"	1"	$1\frac{1}{4}$"	$1\frac{1}{2}$"	2"	$2\frac{1}{2}$"	3	$3\frac{1}{2}$"	4"
Minimum Clearance	1"	1"	$1\frac{1}{8}$"	$1\frac{3}{8}$"	$1\frac{1}{2}$"	$1\frac{3}{4}$"	$2\frac{1}{8}$"	$2\frac{1}{2}$"	$2\frac{7}{8}$"	$3\frac{1}{8}$"

MINIMUM SPACING BETWEEN CONDUIT CENTERS - 'E'										
Size	$\frac{1}{2}$"	$\frac{3}{4}$"	1"	$1\frac{1}{4}$"	$1\frac{1}{2}$"	2"	$2\frac{1}{2}$"	3"	$3\frac{1}{2}$"	4"
$\frac{1}{2}$"	$1\frac{1}{4}$"	$1\frac{3}{8}$"	$1\frac{5}{8}$"	$1\frac{7}{8}$"	2"	$2\frac{3}{8}$"	$2\frac{5}{8}$"	3"	$3\frac{1}{4}$"	$3\frac{5}{8}$"
$\frac{3}{4}$"		$1\frac{1}{2}$"	$1\frac{3}{4}$"	2"	$2\frac{1}{8}$"	$2\frac{1}{2}$"	$2\frac{3}{4}$"	$3\frac{1}{8}$"	$3\frac{3}{8}$"	$3\frac{3}{4}$"
1"			2"	$2\frac{1}{4}$"	$2\frac{3}{8}$"	$2\frac{3}{4}$"	3"	$3\frac{3}{8}$"	$3\frac{5}{8}$"	4"
$1\frac{1}{4}$"				$2\frac{1}{2}$"	$2\frac{5}{8}$"	3"	$3\frac{1}{4}$"	$3\frac{5}{8}$"	$3\frac{7}{8}$"	$4\frac{1}{4}$"
$1\frac{1}{2}$"					$2\frac{3}{4}$"	$3\frac{1}{8}$"	$3\frac{3}{8}$"	$3\frac{3}{4}$"	4"	$4\frac{3}{8}$"
2"						$3\frac{1}{2}$"	$3\frac{3}{4}$"	$4\frac{1}{4}$"	$4\frac{3}{8}$"	$4\frac{3}{4}$"
$2\frac{1}{2}$"							4"	$4\frac{3}{8}$"	$4\frac{5}{8}$"	5"
3"								$4\frac{3}{4}$"	5"	$5\frac{3}{8}$"
$3\frac{1}{2}$"									$5\frac{1}{4}$"	$5\frac{5}{8}$"
4"										6"

Contract Items:

Handholes and Junction Boxes

IOWA DOT

STANDARD ROAD PLAN

REVISION	
New	10-21-14

LI-104

SHEET 1 of 1

REVISIONS: New. Replaces RM-37.

Brian Smith

APPROVED BY DESIGN METHODS ENGINEER

JUNCTION BOX (CAST IRON)

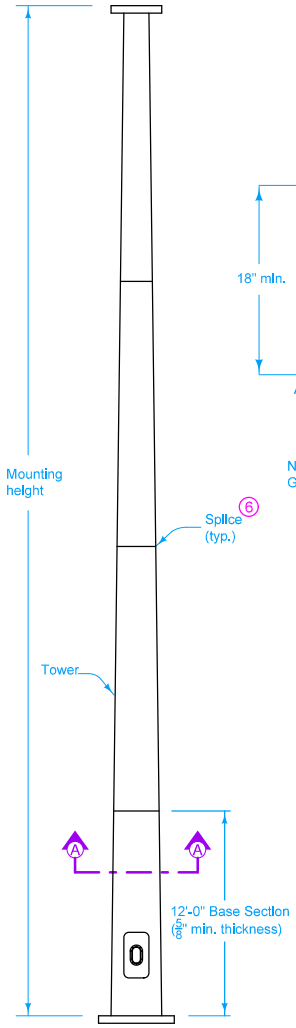

ELEVATION

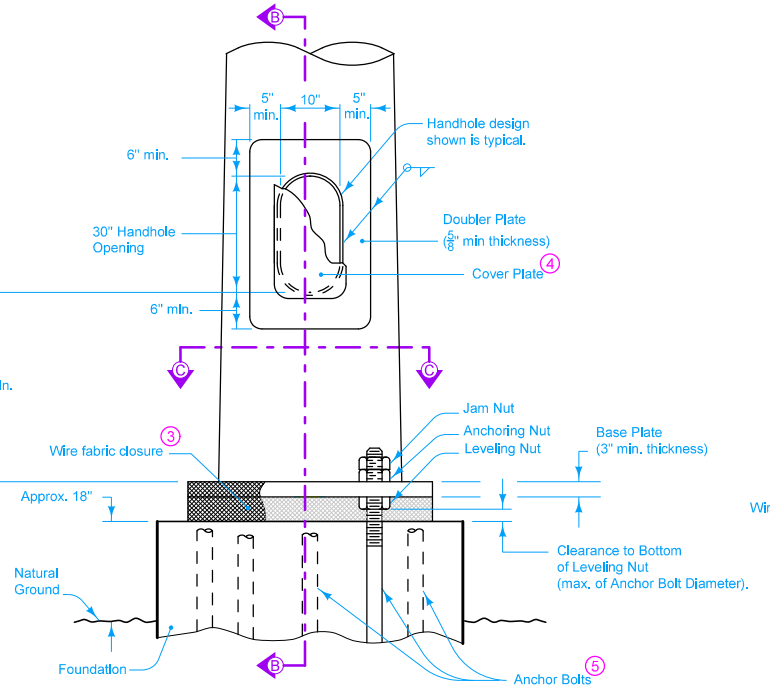

ELEVATION

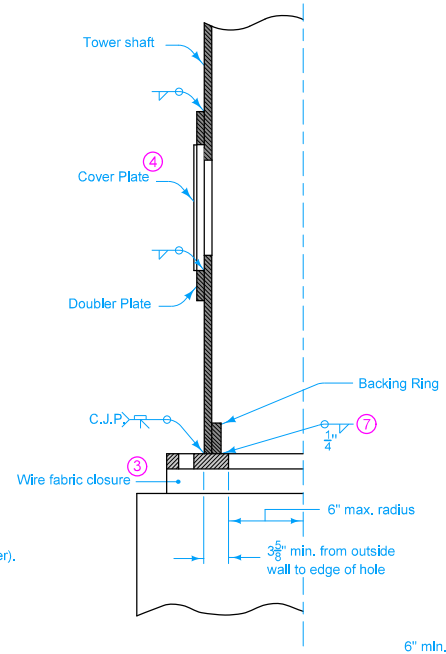

SECTION B-B

(Anchor Bolts not shown for clarity)

1. Place a minimum of eight anchor bolts for all towers. Place bolts as shown in Section C-C.
2. Tower may be fabricated with circular or polygonal cross-section.
3. Furnish wire fabric material to complying with Materials I.M. 443.01. Place wire fabric around base plate and extended to the concrete foundation. Fit fabric tight to the edge of the base plate and to the top surface of foundation to prevent rodent entry.
4. Provide two handles on cover plate. Project cover plate beyond the hole at least 1 inch in all directions.
5. Use Anchor Bolt material meeting the requirements of Materials I.M. 453.08.
6. Seal joints using a brown or colorless non-sag urethane caulking sealer marketed for outdoor use as approved by the Engineer.
7. Continuous backing ring or backing ring made continuous by a complete joint penetration weld.

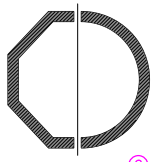

SECTION A-A 2

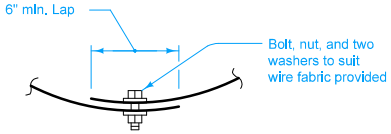

WIRE FABRIC CLOSURE 3

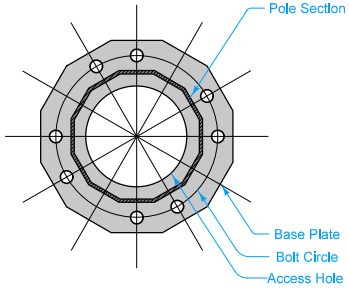

EIGHT ANCHOR BOLT PATTERN
FOR DODECAGON (12) TOWER SECTION

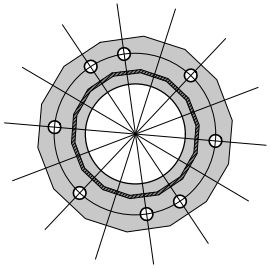

EIGHT ANCHOR BOLT PATTERN
FOR TETRADECAGON (14) TOWER SECTION

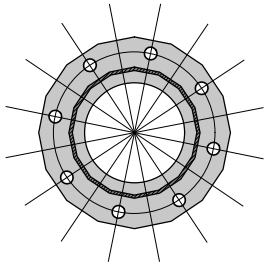

EIGHT ANCHOR BOLT PATTERN
FOR HEXADECAGON (16) TOWER SECTION

SECTION C-C 1

Possible Contract Item:

Lighting Tower

IOWA DOT

STANDARD ROAD PLAN

REVISION	
1	04-19-16

LI-110

SHEET 1 of 1

REVISIONS: Removed venting and caulking requirements for Doubler Plate. Changed on-sag urethane caulking from light grey to brown or colorless.

Brian Smith

APPROVED BY DESIGN METHODS ENGINEER

LIGHTING TOWER

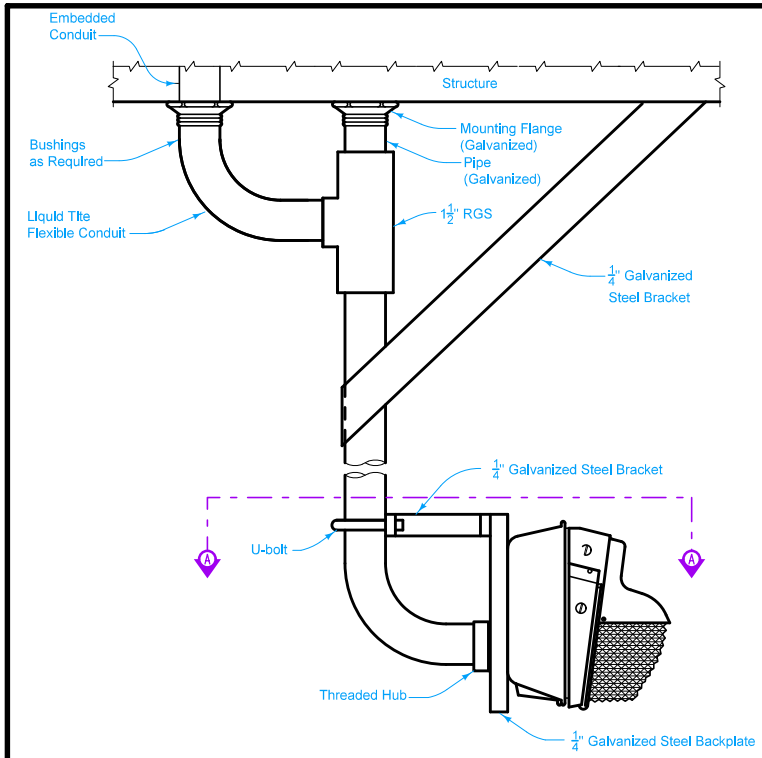

CASE A
TOP MOUNTED

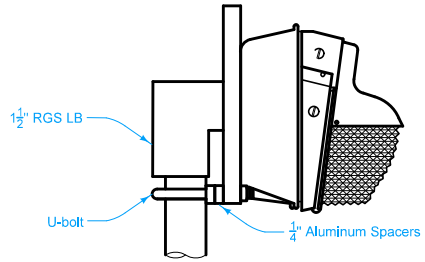

CASE B
STANCHION MOUNTED

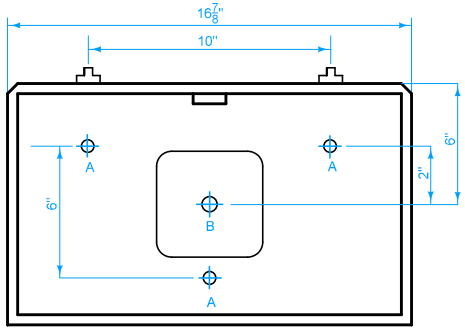

HOLE	DESCRIPTION
A	$\frac{7}{16}$" (Min.) Mounting Hole
B	Entry for 1½" conduit

SIMPLIFIED BACK VIEW

Alternate designs may be submitted to the Engineer for approval.

Furnish luminaires that provide ballast housings to be attached to, or integral with, luminaire housings.

LAYOUT LEGEND	
Underdeck Lighting	■

Possible Contract Item:
Underdeck Lighting

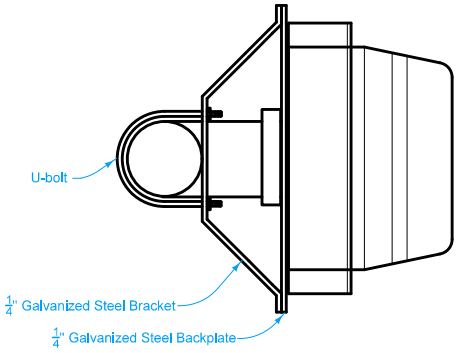

SECTION A-A

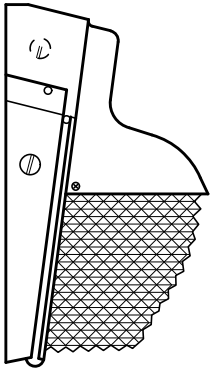

CASE C
WALL MOUNTED

IOWA DOT

STANDARD ROAD PLAN

REVISION	
New	10-21-14

LI-120

SHEET 1 of 1

REVISIONS: New. Replaces RM-41.

Brian Smith
APPROVED BY DESIGN METHODS ENGINEER

UNDERDECK LIGHTING

TRAILER MOUNTED LED LUMINAIRE

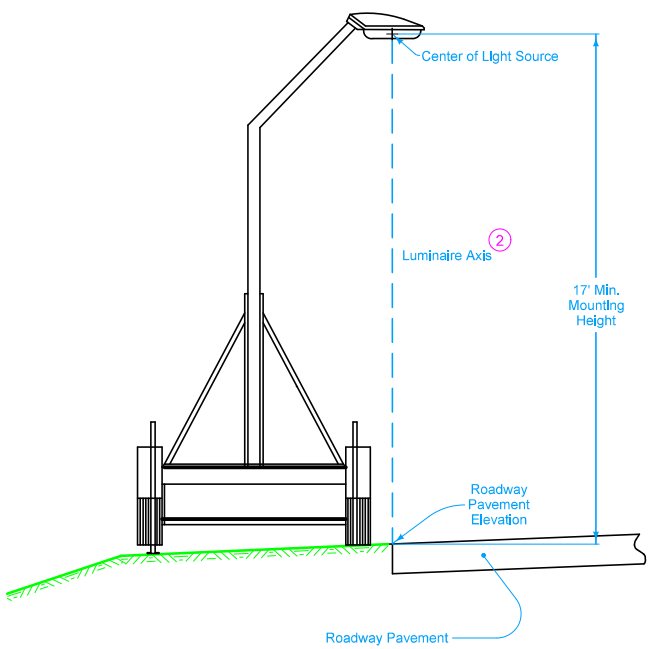

POLE MOUNTED LUMINAIRE

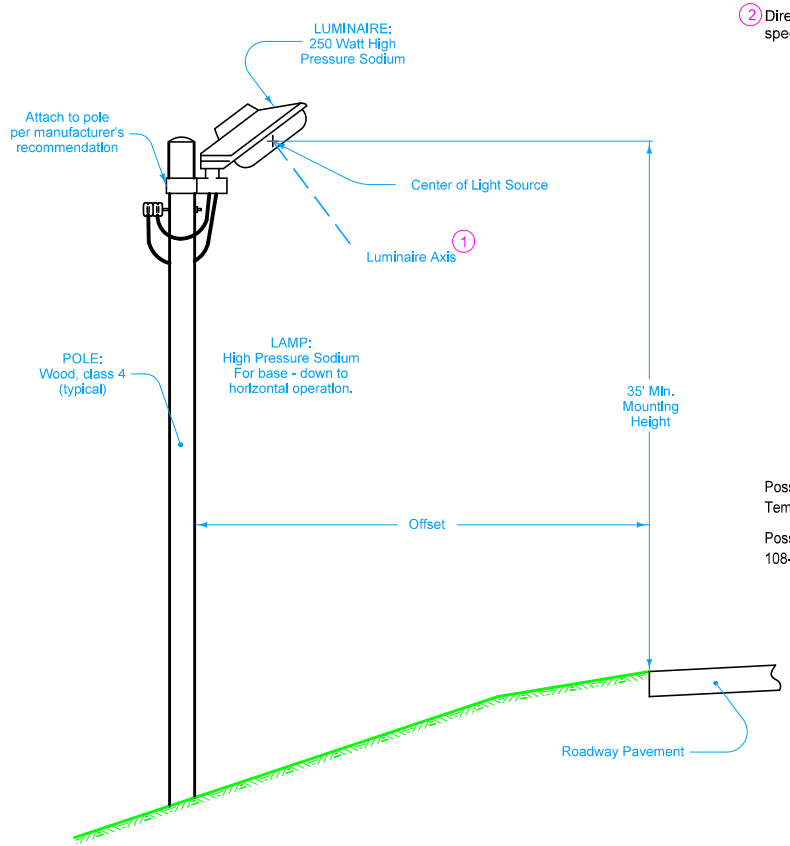

1 Direct luminaire axis to within the limits of the near traffic lane unless specified otherwise.

2 Direct luminaire axis to edge of pavement unless specified otherwise.

Possible Contract Item:
Temporary Floodlighting Luminaire

Possible Tabulation:
108-27

IOWA DOT

STANDARD ROAD PLAN

REVISION	
NEW	10-21-14

LI-130

SHEET 1 of 1

REVISIONS: New. Replaces RM-48.

Brian Smith
APPROVED BY DESIGN METHODS ENGINEER

TEMPORARY FLOODLIGHTING LUMINAIRES

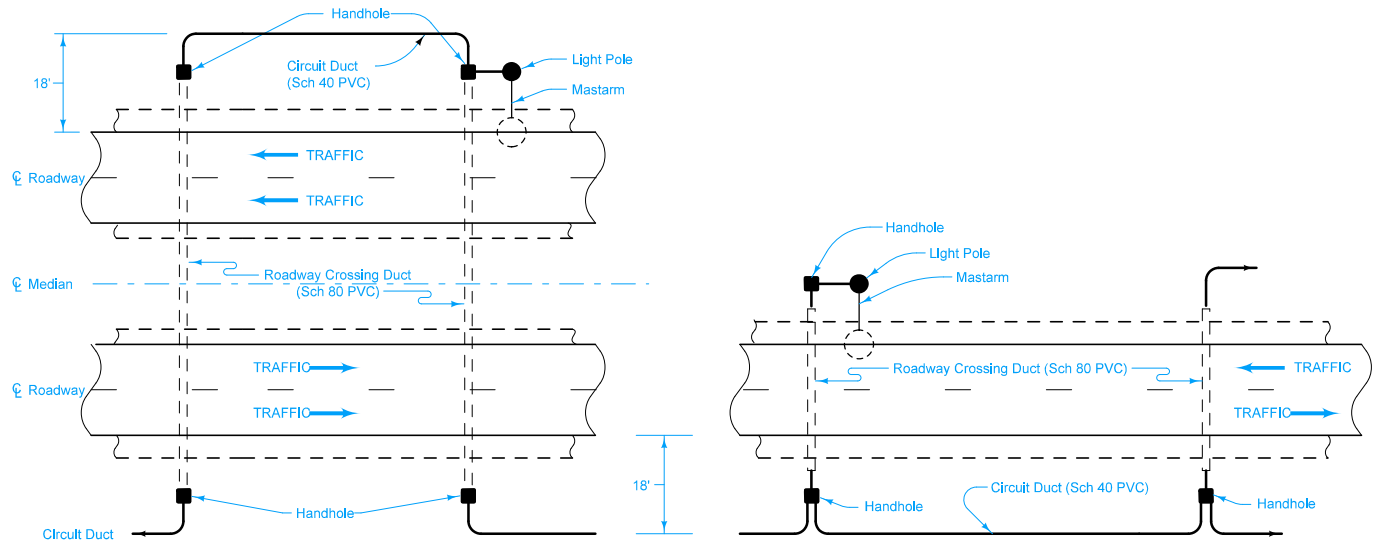

TYPICAL PLANS
CIRCUIT AND ROADWAY CROSSING DUCTS

(1) Connect to light pole foundation, handhole, or circuit duct as shown on project plans.

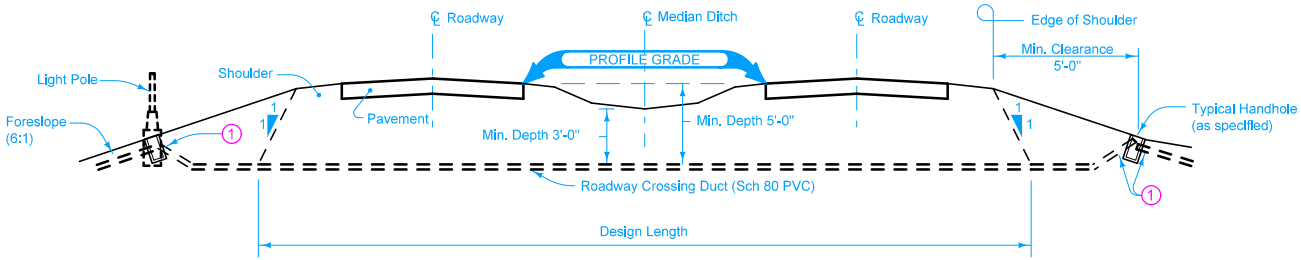

TYPICAL SECTION
WHERE FORESLOPES ARE 6:1 OR FLATTER

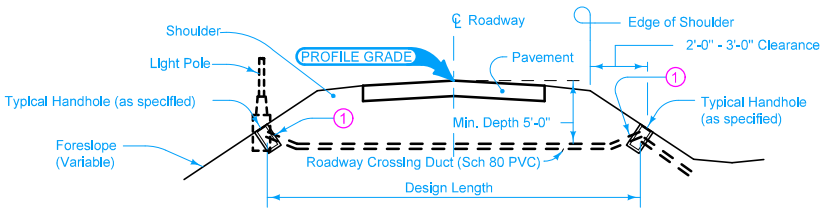

TYPICAL SECTION
WHERE FORESLOPES ARE STEEPER THAN 6:1

LAYOUT LEGEND
Crossing
Handhole
Lighting Unit

IOWA DOT

STANDARD ROAD PLAN

REVISION	
New	10-21-14

LI-141

SHEET 1 of 1

REVISIONS: New. Replaces RM-33.

Brian Smith
APPROVED BY DESIGN METHODS ENGINEER

ELECTRICAL INSTALLATION (ROADWAY DUCTS)

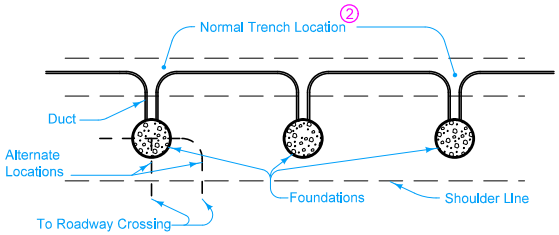

TYPICAL LAYOUTS ①
CONNECTIONS TO FOUNDATIONS

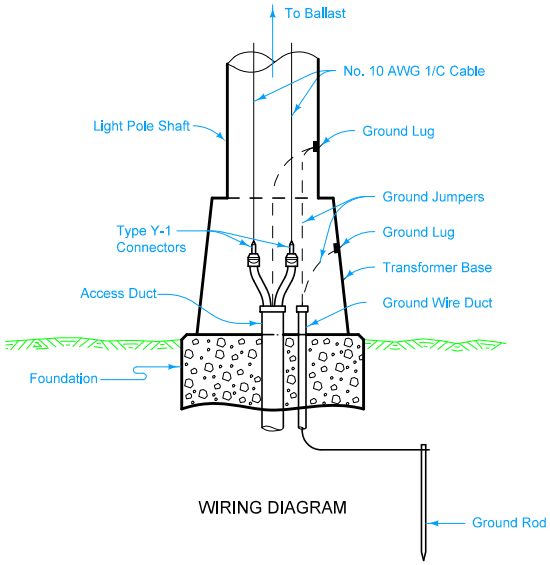

WIRING DIAGRAM

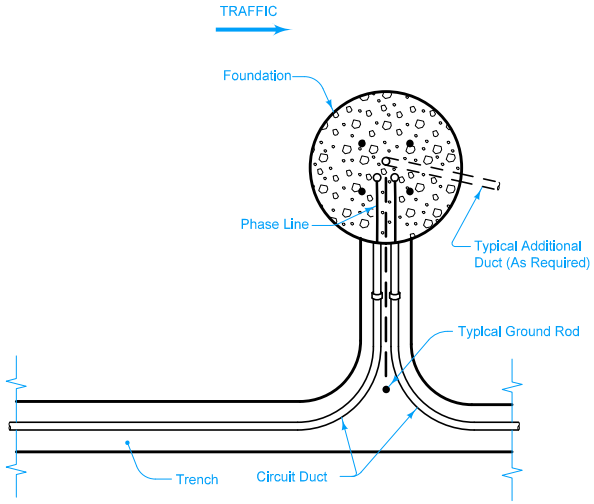

PLAN VIEW

Alternate designs may be submitted to the Engineer for approval.

Lighting circuits consist of single conductor phase lines with bare ground wires installed in continuous underground ducts.

Locate standard trenches for lighting distribution circuits 3 feet outside the line of the light pole foundations, except for roadway crossing, access to connection points, or other cases detailed on the project plans or approved by the Engineer.

The Engineer may allow variation from minimum depths for roadway crossings, access to connection points, soil conditions, or other special cases. Where rock is encountered, a minimum trench depth of 2 feet is required.

Ducts installed under pavement slabs, drives, and other similar locations detailed in the project plans are designated as "crossings" and distinguished from other underground circuit ductwork. Refer to LI-141 for additional details.

Use Y-1 connectors for all load taps in phase lines and use Y-3 connectors for all circuit branch taps, unless specified or detailed otherwise. When the method of in-line splicing is not specified on the project plans, the Engineer may approve the use of connector assemblies or field molded splices.

Provide 600 volt fuses as specified, 5 amperes for each Type Y-1 connector.

Seal all unused connector openings against entry of moisture as directed by the Engineer.

① Use a separate access duct for each connection to pole foundation.

② Refer to NEC requirements for trench depth.

TRANSFORMER BASE

IOWA DOT

STANDARD ROAD PLAN

REVISION	
1	04-21-15

LI-142

SHEET 1 of 2

REVISIONS: Changed reference from LS-401 to LI-141 In the General Notes.

Brian Smith
APPROVED BY DESIGN METHODS ENGINEER

ELECTRICAL INSTALLATION (BASES)

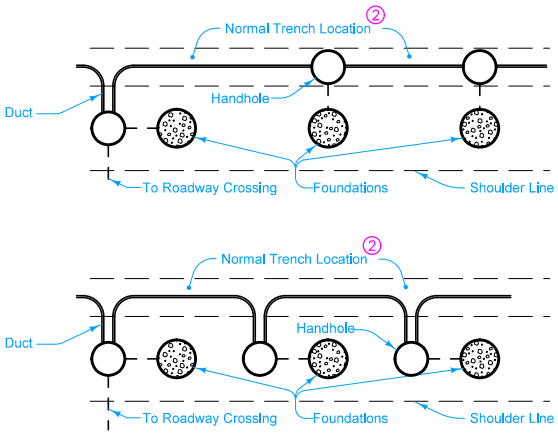

TYPICAL LAYOUTS ①③
CONNECTIONS TO FOUNDATIONS

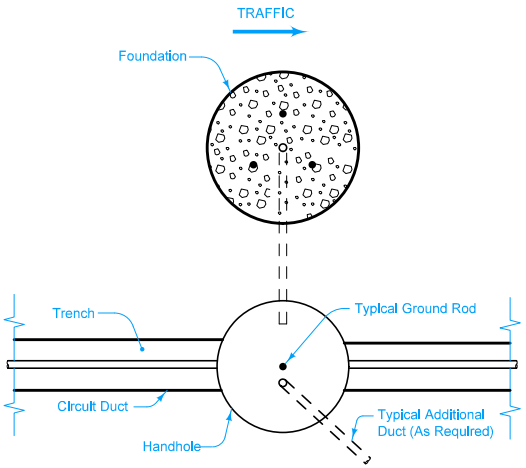

PLAN VIEW ③

① Use a separate access duct for each connection to pole foundation.

② Refer to NEC requirements for trench depth.

③ Handhole may be placed behind pole. Meet the requirements of Article 2523.03, O, of the Standard Specifications.

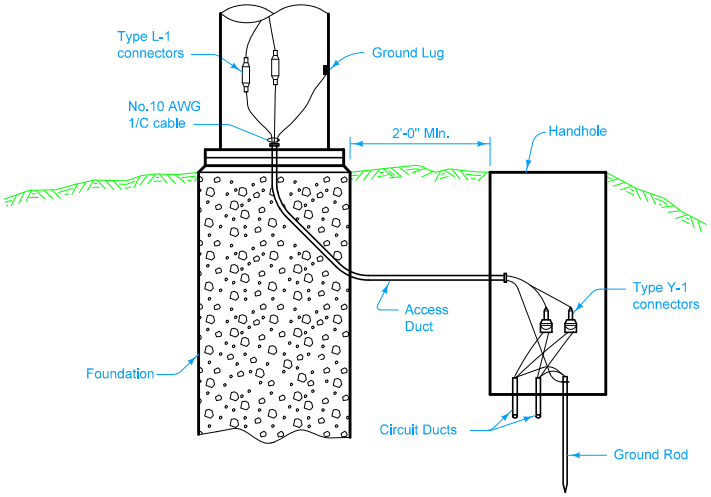

WIRING DIAGRAM

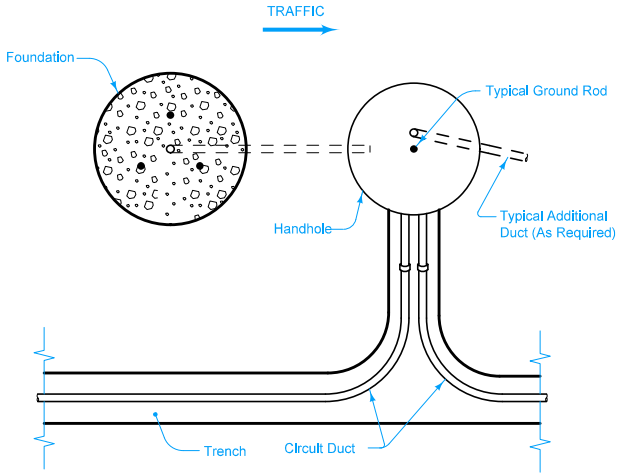

PLAN VIEW

SLIP BASE

IOWA DOT

STANDARD ROAD PLAN

REVISION	
1	04-21-15

LI-142

SHEET 2 of 2

REVISIONS: Changed reference from LS-401 to LI-141 in the general notes.

Brian Smith
APPROVED BY DESIGN METHODS ENGINEER

ELECTRICAL INSTALLATION (BASES)

A. Test Switch
B. Line Breaker
C. Contactor
D. Control Fuse
E. Lightning Arrestor
F. Primary Line
G. Primary Fused Cutout
H. Distribution Transformer
I. Meter
J. Photoelectric Control
K. Control Circuits
L. Line Circuits
M. Branch Circuit Breakers
N. Surge Protection Device

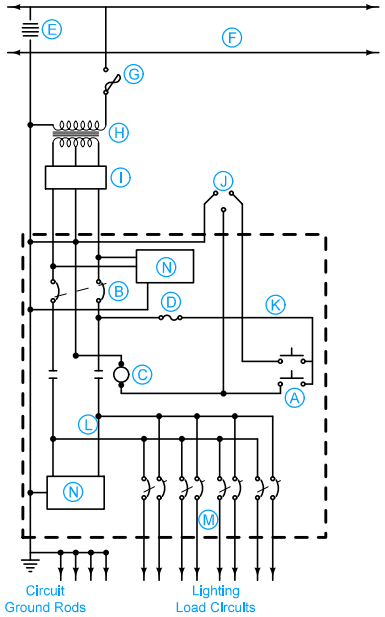

SCHEMATIC DIAGRAM

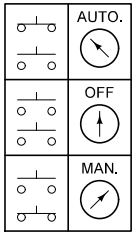

SWITCH OPERATION

A. Test Switch
B. Line Breaker (2P.)
C. Contactor (2P.)
D. Control Fuse
1 thru 4. Branch Circuit Breakers (2P.)
N Surge Protection Device

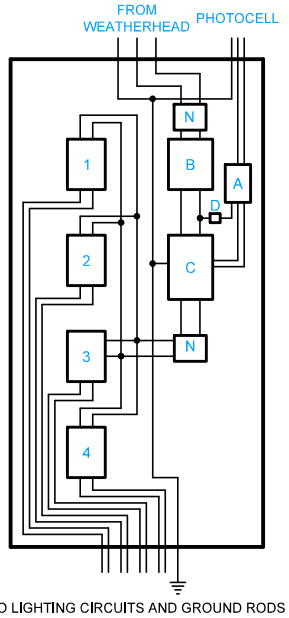

CONTROL PANEL WIRING DIAGRAM

Alternate designs may be submitted to the Engineer for approval.

(1) Locate handholes where shown on plans, as well as where control cabinets are at low points in the conduit system, which could result in the low points becoming flooded with water entering at other points in the conduit system.

Possible Contract Item:
Control Cabinet

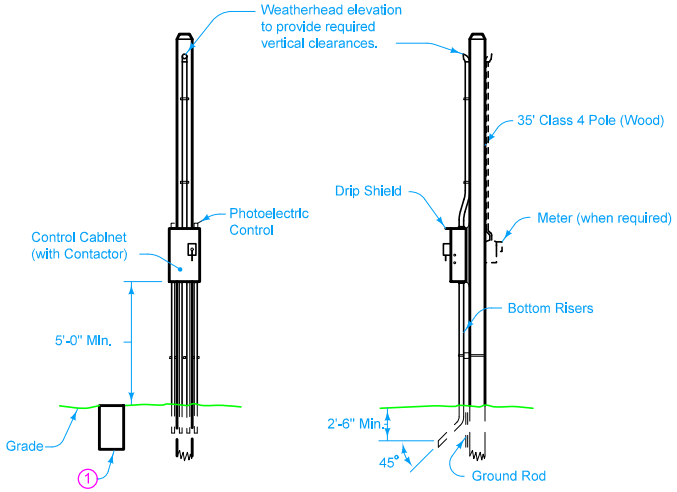

TYPICAL INSTALLATION

LAYOUT LEGEND
Control Cabinet (Pole-Mounted)

IOWA DOT

STANDARD ROAD PLAN

REVISION	
New	10-21-14

LI-151

SHEET 1 of 1

REVISIONS: New. Replaces RM-35.

Brian Smith
APPROVED BY DESIGN METHODS ENGINEER

CONTROL CABINET (POLE-MOUNTED)

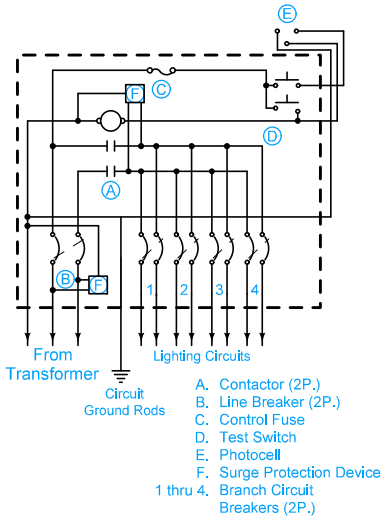

SCHEMATIC DIAGRAM

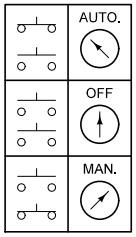

SWITCH OPERATION

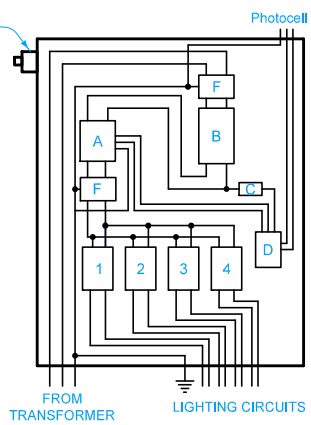

CONTROL PANEL WIRING DIAGRAM

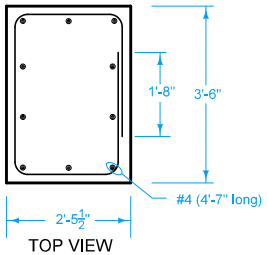

TOP VIEW

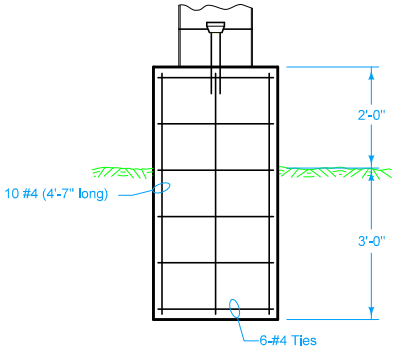

SIDE VIEW
CONTROLLER PAD

Alternate design may be submitted to the Engineer for approval.

All circuit ducts shown, including ground wire duct, are included in the estimated quantities for plastic conduit contained in the tabulations.

The estimated quantities for wire and cable contained in the tabulations include connections to the loadside terminals of the branch circuit breakers.

The No. 12, AWG grounding jumper for the photoelectric control is incidental to the length of ground wire.

(1) 1/2" x 4" long Bolts (2 required)

Possible Contract Item:
Control Cabinet

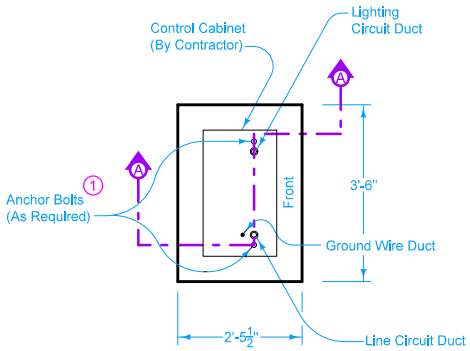

PLAN VIEW

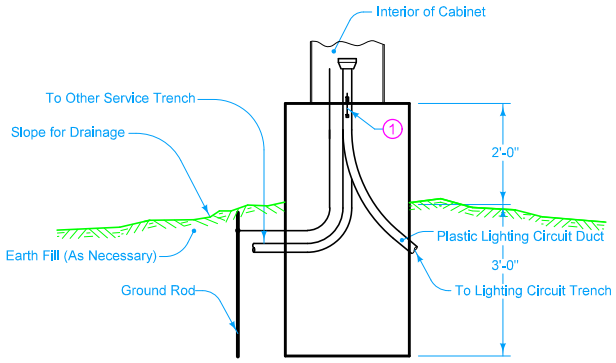

SECTION A-A

INSTALLATION DETAILS

ESTIMATED QUANTITIES (One Pad)	
Reinforcing Steel	79.5 lbs.
Structural Concrete	1.6 yd 3

LAYOUT LEGEND	
Control Cabinet (Pad-Mounted)	⊠

IOWA DOT

STANDARD ROAD PLAN

REVISION	
New	10-21-14

LI-152

SHEET 1 of 1

REVISIONS: New. Replaces RM-36.

Brian Smith
APPROVED BY DESIGN METHODS ENGINEER

CONTROL CABINET (PAD-MOUNTED)

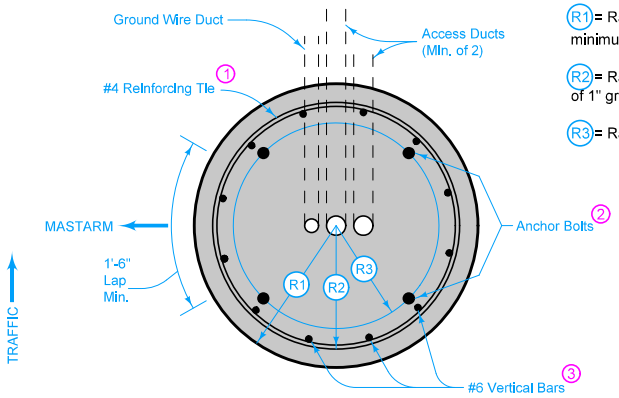

PLAN (TRANSFORMER BASE)

R1 = Radius of foundation. Minimum $13\frac{1}{2}$" and minimum of 2" greater than R2.

R2 = Radius of the reinforcing tie. Minimum of 1" greater than R3.

R3 = Radius of the anchor bolt circle.

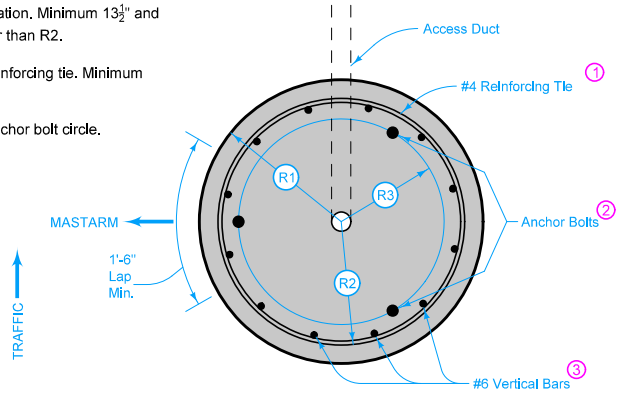

PLAN (SLIP BASE)

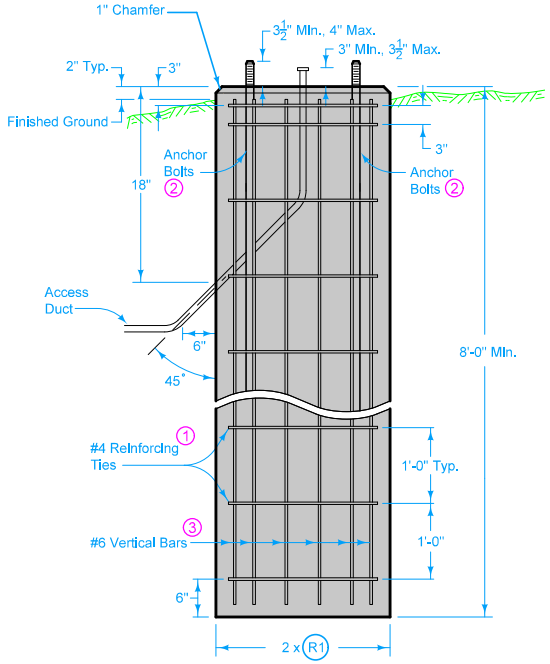

TYPICAL SECTION
TYPE A FOUNDATION

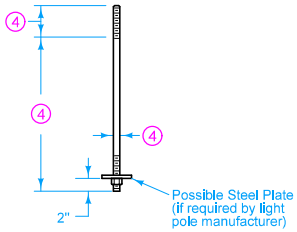

ANCHOR BOLT

The Type A Foundation is the normally required foundation construction. Where rock, shale, sandstone, broken or shattered rock, or other similar material is encountered, the Engineer may approve the use of the Type B or C Foundation. Dispose of all excavations in the area adjacent to the foundation and shape to the natural contour unless directed otherwise by the Engineer.

Minimum diameter of foundation is determined by the Anchor Bolt Circle required for the diameter of the pole being installed. Where dimensional requirements indicated cannot be met with normal foundations, enlarge the foundation as necessary to accomodate the required diameter at no additional cost to the Contracting Authority.

Provide minimum 2" clear for all reinforcement.

Cap open ends of conduit during construction to prevent infiltration of foreign material. After the cable is installed, seal the upper end of the ducts against entry of moisture by a method approved by the Engineer.

For access ducts, use a 2" nominal inside diameter duct.

For Transformer Base foundations, install a minimum of two access ducts, unless specified otherwise. Also install a 1" nominal inside diameter duct for the ground wire duct.

1. #4 bars lapped a minimum of 1'-6" as indicated. Ties may be welded to vertical bars.
2. Use full length galvanized anchor bolts: four for Transformer Base, three for Slip Base. Refer to the light pole manufacturer's requirements for anchor bolt, nut, and plate dimensions. Obtain a template from the light pole manufacturer for anchor bolt placement. Do not weld anchor bolts.
3. Place 12 equally spaced bars. Use #6 bars for 27 inch diameter drilled shaft. Use #7 bars for 30 inch diameter drilled shaft. Use #8 bars for 36 inch diameter drilled shaft.
4. Refer to light pole manufacturer's recommendations for Anchor Bolt dimensions.

IOWA DOT

REVISION 2 04-18-17

STANDARD ROAD PLAN

LI-201

SHEET 1 of 2

REVISIONS: Revised number and size of vertical bars. Eliminated hooked anchor bolts. Added new Type C foundation.

Brian Smith
APPROVED BY DESIGN METHODS ENGINEER

LIGHT POLE FOUNDATION

If the excavation for a Type B Foundation is left open for more than 1 calandar day, install temporary barrier rail if any part of the excavation is located within the clear zone. Temporary barrier rail layout requires the Engineer's approval. Temporary barrier rail is incidental to the Type B Foundation and will not be paid for separately.

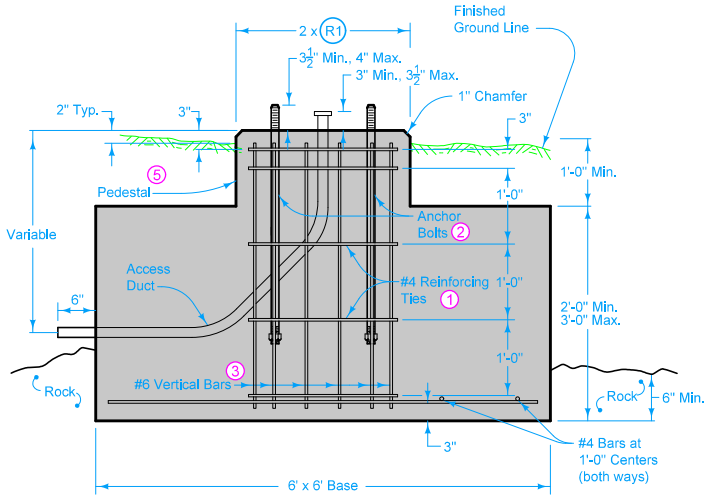

TYPICAL SECTION
TYPE B FOUNDATION

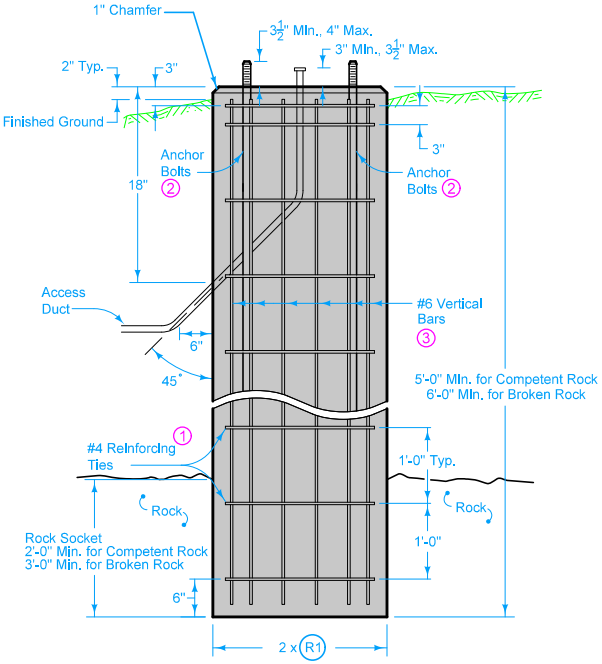

TYPICAL SECTION
TYPE C FOUNDATION

1. #4 bars lapped a minimum of 1'-6" as indicated. Ties may be welded to vertical bars.
2. Use full length galvanized anchor bolts: four for Transformer Base, three for Slip Base. Refer to the light pole manufacturer's requirements for anchor bolt, nut, and plate dimensions. Obtain a template from the light pole manufacturer for anchor bolt placement. Do not weld anchor bolts.
3. Place 12 equally spaced bars. Use #6 bars for 27 inch diameter drilled shaft. Use #7 bars for 30 inch diameter drilled shaft. Use #8 bars for 36 inch diameter drilled shaft.
5. Foundation base may be thickened and pedestal omitted at the contractor's option.

IOWA DOT

STANDARD ROAD PLAN

REVISION	
2	04-18-17

LI-201

SHEET 2 of 2

REVISIONS: Revised number and size of vertical bars. Eliminated hooked anchor bolts. Added new Type C foundation.

Brian Smith
APPROVED BY DESIGN METHODS ENGINEER

LIGHT POLE FOUNDATION

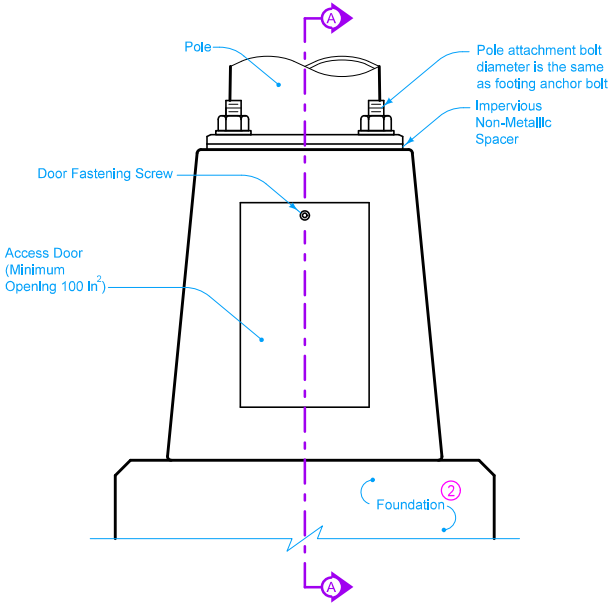

ELEVATION

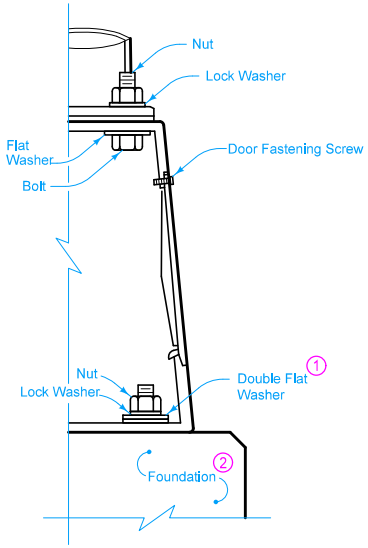

SECTION A-A

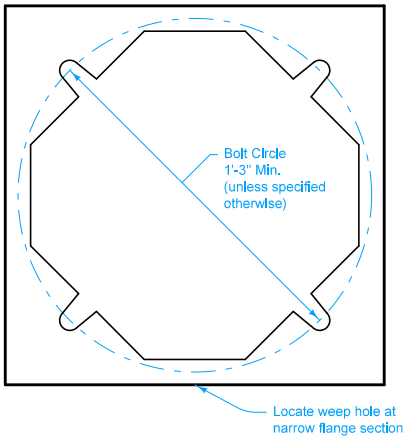

BOTTOM VIEW

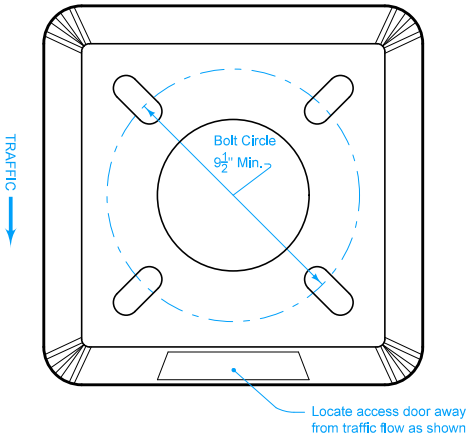

TOP VIEW

Furnish hardware fabricated using stainless steel.

When the design of the base flanges requires the use of tapered, mating washers, use washers of the design and material recommended by the manufacturer of the base.

1. Use double thickness flat washers only when tapered washer Is not required.
2. Refer to LI-201 for foundation details.

IOWA DOT

STANDARD ROAD PLAN

REVISION	
New	10-21-14

LI-210

SHEET 1 of 1

REVISIONS: New. Replaces RM-43.

Brian Smith

APPROVED BY DESIGN METHODS ENGINEER

TRANSFORMER BASE (CAST ALUMINUM)

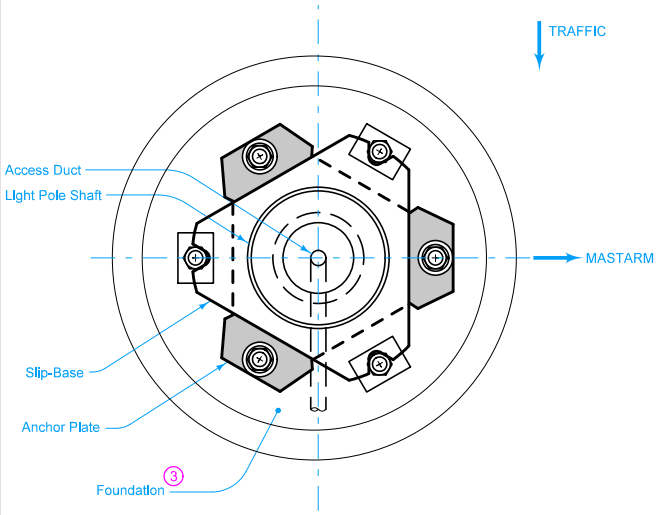

PLAN

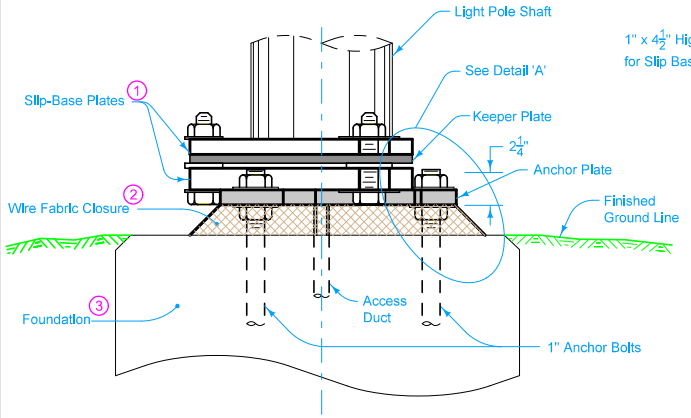

ELEVATION

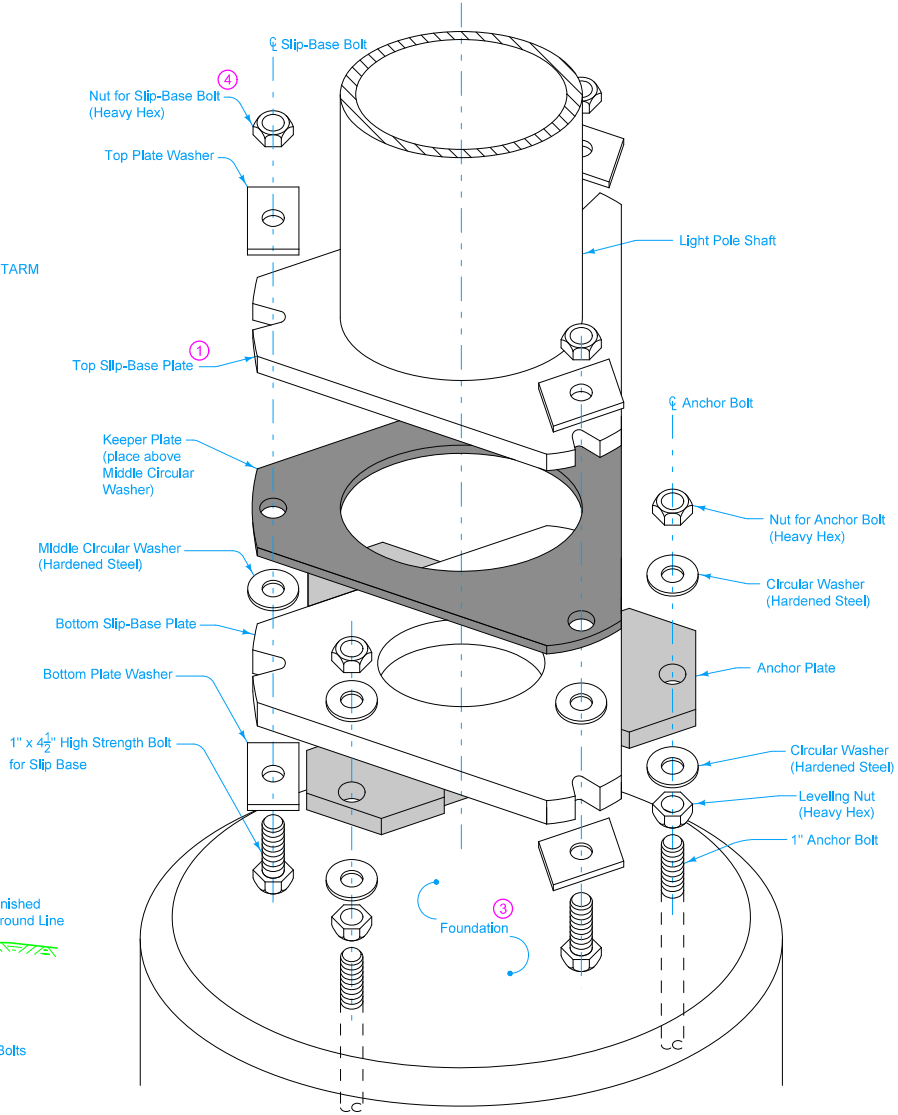

ASSEMBLY OF SLIP-BASE

1. Ensure the top Slip-Base Plate clears all Anchor Bolts.
2. Furnish wire fabric material complying with Materials I.M. 443.01. Place wire fabric around anchor bolt circle between concrete foundation and base plate. Fit the fabric tight to the bottom surface of the baseplate and the top surface of the foundation to prevent rodent entry.
3. Refer to LI-201 for foundation details.
4. Torque to 1000 in. lbs.

LIST OF FASTENER HARDWARE
1" anchor bolts: 3 total.
1" x $4\frac{1}{2}$" bolts for slip-base: 3 total.
Plate washers: 6 total; 3 top plate and 3 bottom plate.
Circular washers: 9 total; 3 middle washers, 3 washers for leveling nuts, and 3 washers for anchor bolt nuts.
Lock washers: 3 total.
Nuts: 9 total; 3 leveling nuts, 3 nuts for anchor bolts, and 3 nuts for slip-base bolts.

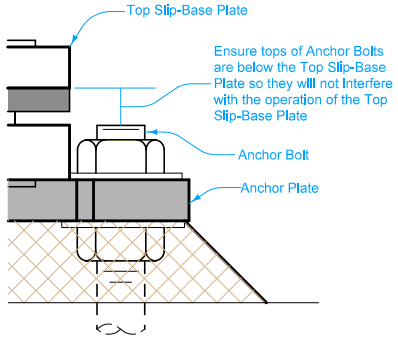

Detail 'A'

IOWA DOT

STANDARD ROAD PLAN

REVISION	
1	10-20-15

LI-211

SHEET 1 of 2

REVISIONS: Switched anchor plate and slip-base call outs in PLAN view on Sheet 1. Removed lock washers.

Brian Smith
APPROVED BY DESIGN METHODS ENGINEER

SLIP-BASE FOR LIGHT POLES

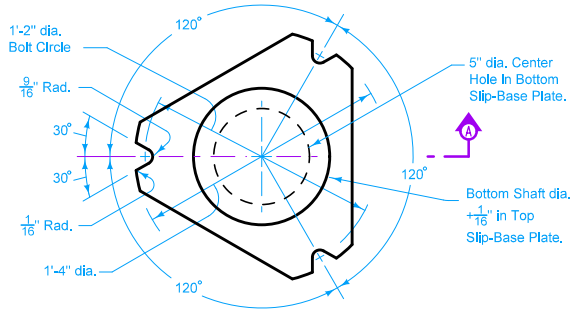

SLIP-BASE PLATE

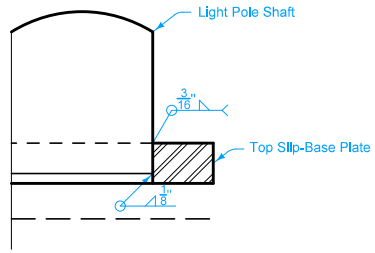

TYPICAL HALF SECTION 'A'
(Top Slip-Base Plate)

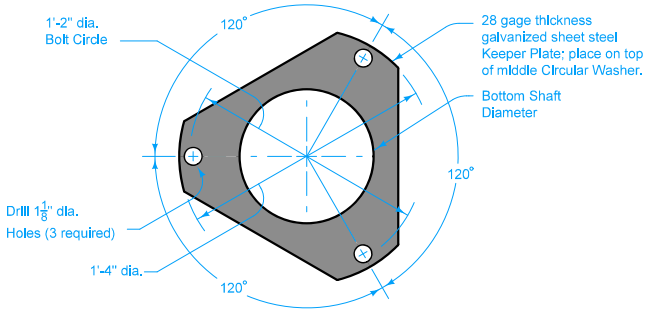

KEEPER PLATE

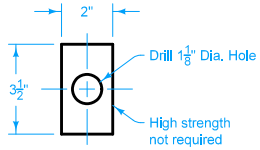

5/16" THICK
PLATE WASHER

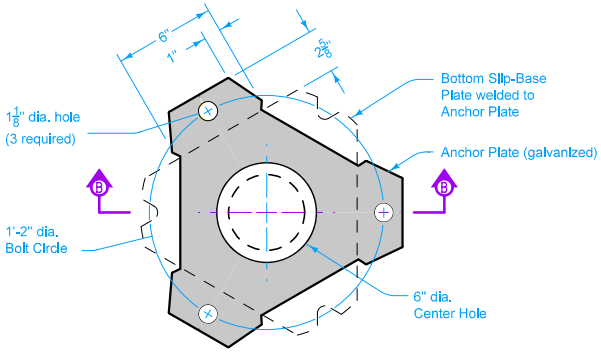

ANCHOR PLATE

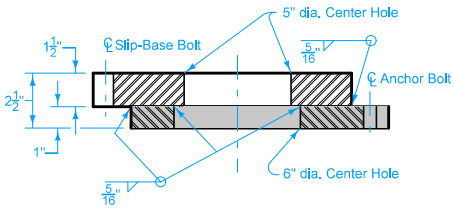

SECTION B-B
ANCHOR PLATE

IOWA DOT

STANDARD ROAD PLAN

REVISION	
1	10-20-15

LI-211

SHEET 2 of 2

REVISIONS: Switched anchor plate and slip-base call outs in PLAN view on Sheet 1. Removed lock washers.

Brian Smith
APPROVED BY DESIGN METHODS ENGINEER

SLIP-BASE FOR LIGHT POLES