BRIDGE REPLACEMENT - STEEL GIRDER
BRF-092-1(64)--38-78
POTTAWATTAMIE COUNTY

LETTING DATE 12/16/2014

LEGEND

INTERSTATE HIGHWAY
PRIMARY HIGHWAY-DIVIDED
PRIMARY HIGHWAY
PORTLAND CEMENT CONCRETE ROAD
ASPHALT ROAD
BITUMINOUS ROAD
GRAVEL ROAD
EARTHEN ROAD
INTERSTATE HIGHWAY 80
UNITED STATES HIGHWAY 65
STATE HIGHWAY 175
COUNTY HIGHWAY S27
RAILROAD
PIPELINE
AIRPORT
HYDROLOGY
BRIDGE
STATE BOUNDARY
COUNTY BOUNDARY
CORPORATE BOUNDARY
TOWNSHIP LINE
SECTION LINE
ROAD NAMES ABBEY ROAD
UNINCORPORATED PLACE ELWOOD

Iowa Department of Transportation
Highway Division

PLANS OF PROPOSED IMPROVEMENTS ON THE

PRIMARY ROAD SYSTEM

POTTAWATTAMIE COUNTY

BRIDGE REPLACEMENT - STEEL GIRDER

IA 92 OVER LITTLE SILVER CREEK, 0.3 MILE W. OF CO. RD. L-55

THE IOWA DEPARTMENT OF TRANSPORTATION STANDARD SPECIFICATIONS FOR HIGHWAY AND BRIDGE CONSTRUCTION, SERIES 2012, PLUS APPLICABLE GENERAL SUPPLEMENTAL SPECIFICATIONS, DEVELOPMENTAL SPECIFICATIONS, SUPPLEMENTAL SPECIFICATIONS AND SPECIAL PROVISIONS SHALL APPLY TO CONSTRUCTION WORK ON THIS PROJECT.

ENGLISH STANDARD BRIDGE PLANS		
STANDARD	ISSUED	REVISED

TOTAL SHEETS
?
PROJECT NUMBER
BRF-092-1(64)--38-78
R.O.W. PROJECT NUMBER
?
PROJECT IDENTIFICATION NUMBER
10-78-092-010

INDEX OF SHEETS

NO.	DESCRIPTION
1	TITLE SHEET
2	ESTIMATE SHEET - DESIGN 115
2-?	DESIGN 115
?	SOIL PROFILE SHEET
?	ESTIMATE SHEET FOR ROADWAY
?	ROADWAY SHEETS

REVISIONS

DESIGN NO. 115

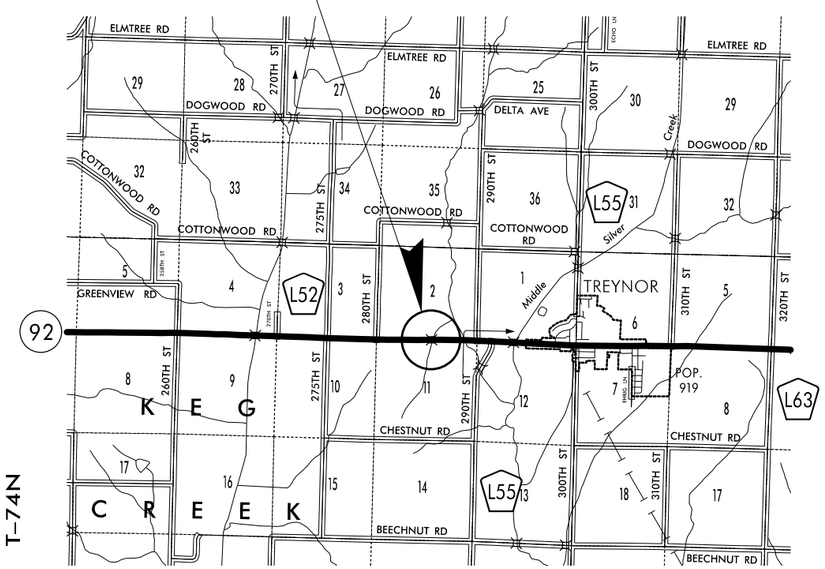

LOCATION MAP

PRELIMINARY
NOT FOR CONSTRUCTION

IOWA ONE CALL
1-800-292-8989
www.iowaonecall.com
811 Know what's below. Call before you dig.

60% PLANS
FOR
CONSTRUCTABILITY REVIEW

STANDARD ROAD PLANS

STANDARD ROAD PLANS ARE LISTED ON SHEET NUMBER _____

DESIGN DATA RURAL

REFER TO INDIVIDUAL SITUATION PLANS FOR TRAFFIC DATA INFORMATION

DESIGN DATA RURAL

2015	AADT	5,200	V.P.D.
2035	AADT	6,900	V.P.D.
202?	DHV	--	V.P.H.
TRUCKS		9	%
Total Design ESALs		--	

INDEX OF SEALS

SHEET NO.	NAME	TYPE
1	CURTIS J. CARTER	STRUCTURAL DESIGN
1	PATRICIA G. SCHWARZ	HYDRAULIC DESIGN
BRIDGE STANDARDS	NORMAN L. McDONALD	STRUCTURAL DESIGN

HYDRAULIC DESIGN

LICENSED PROFESSIONAL ENGINEER Patricia G. Schwarz 13170 IOWA

I hereby certify that this engineering document was prepared by me or under my direct personal supervision and that I am a duly licensed Professional Engineer under the laws of the State of Iowa.

Signature Patricia G. Schwarz Date
Printed or Typed Name
My license renewal date is December 31, _____
Pages or sheets covered by this seal: SHEETS ? THRU ? OF ?

STRUCTURAL DESIGN

LICENSED PROFESSIONAL ENGINEER Curtis J. Carter 20803 IOWA

I hereby certify that this engineering document was prepared by me or under my direct personal supervision and that I am a duly licensed Professional Engineer under the laws of the State of Iowa.

Signature Curtis J. Carter Date
Printed or Typed Name
My license renewal date is December 31, _____
Pages or sheets covered by this seal: SHEETS ? THRU ? OF ?

PROJECT DIRECTORY NAME: 7809201010

ESTIMATED BRIDGE QUANTITIES

ITEM NO.	ITEM CODE	ITEM	UNIT	TOTAL	AS BUILT QUAN.
1	2104-2710020	EXCAVATION, CLASS 10, CHANNEL	CY	0.0	
2	2401-6745625	REMOVAL OF EXISTING BRIDGE	LS	0.00	
3	2402-2720000	EXCAVATION, CLASS 20	CY	0	
4	2402-2721000	EXCAVATION, CLASS 21	CY	0	
5	2403-0100000	STRUCTURAL CONCRETE (MISCELLANEOUS)	CY	0.0	
6	2404-7775000	REINFORCING STEEL	LB	0	
7	2404-7775005	REINFORCING STEEL, EPOXY COATED	LB	0	
8	2404-7775009	REINFORCING STEEL, STAINLESS STEEL	LB	0	
9	2408-7800000	STRUCTURAL STEEL	LB	0	
10	2412-0000100	LONGITUDINAL GROOVING IN CONCRETE	SY	0.0	
11	2414-6424110	CONCRETE BARRIER RAILING	LF	0.0	
12	2501-0201057	PILES, STEEL, HP 10 X 57	LF	0	
13	2507-2638650	BRIDGE WING ARMORING - EROSION STONE	SY	0.0	
14	2507-3250005	ENGINEERING FABRIC	SY	0.0	
15	2507-6800061	REVETMENT, CLASS E	TON	0.0	
16	2507-8029000	EROSION STONE	TON	0.0	
17	2526-8285000	CONSTRUCTION SURVEY	LS	0.00	
18	2599-9999003	ULTRA HIGH PERFORMANCE CONCRETE	CY	0.0	
19	2599-9999009	PILES, STEEL, HP 16 X 141	LF	0.0	
20	2599-9999010	BRIDGE ABUTMENT	LS	0.00	
21	2599-9999010	BRIDGE APPROACH, REINFORCED, AS PER PLAN	LS	0.00	
22	2599-9999010	BRIDGE PIER	LS	0.00	
23	2599-9999010	SUPERSTRUCTURE MODULE, M50-EXTERIOR	LS	0.00	
24	2599-9999010	SUPERSTRUCTURE MODULE, M50-INTERIOR	LS	0.00	
25	2599-9999010	SUPERSTRUCTURE MODULE, M90-EXTERIOR	LS	0.00	
26	2599-9999010	SUPERSTRUCTURE MODULE, M90-INTERIOR	LS	0.00	
27	2599-9999010	UHPC JOINT MOCKUP	LS	0.00	
28	2599-9999018	DECK GRINDING	SY	0.0	

PENDING DETAILS FOR FINAL PLANS:

--DECK DRAIN DETAILS
--LIFTING LOOP / LIFTING POCKET DETAILS FOR PRECAST
--PIER COMPRESSION BLOCK / ANCHOR BOLT DETAILS
--PRECAST APPROACH SLAB DETAILS
--UHPC JOINT MOCKUP DETAILS
--DECK GRINDING DETAILS / NOTES
--TABLE OF PRECAST PICK WEIGHTS
--DESIGN NOTES FOR ACCELERATED CONSTRUCTION SCHEDULE
--DESIGN NOTES FOR MULTIPLE PIER OPTIONS
--DESIGN NOTES FOR MULTIPLE ABUTMENT OPTIONS
--DESIGN NOTES FOR MULTIPLE APPROACH OPTIONS
--SPECIAL PROVISIONS FOR ACCELERATED CONSTRUCTION SCHEDULE
--SPECIAL PROVISIONS FOR UHPC
--SPECIAL PROVISIONS FOR PRECAST BRIDGE ELEMENTS
--SPECIAL PROVISIONS FOR ALTERNATE SITE CASTING

DESIGN FOR 20° SKEW (R.A.)

234'-0 x 44'-0 ROLLED STEEL BEAM BRIDGE

91'-0 & 51'-0 END SPANS 92'-0 INTERIOR SPAN

ESTIMATED QUANTITIES

STA. 528+80.00 IA 92 ?, 2004

POTTAWATTAMIE COUNTY

IOWA DEPARTMENT OF TRANSPORTATION - HIGHWAY DIVISION

DESIGN SHEET NO. 1 OF ? FILE NO. 30846 DESIGN NO. 115

ESTIMATE REFERENCE INFORMATION

ITEM NO.	ITEM CODE	DESCRIPTION
1	2104-2710020	EXCAVATION, CLASS 10, CHANNEL - -
2	2401-6745625	REMOVAL OF EXISTING BRIDGE - -
3	2402-2720000	EXCAVATION, CLASS 20 - -
4	2402-2721000	EXCAVATION, CLASS 21 - -
5	2403-0100000	STRUCTURAL CONCRETE (MISCELLANEOUS) - -
6	2404-7775000	REINFORCING STEEL - -
7	2404-7775005	REINFORCING STEEL, EPOXY COATED - -
8	2404-7775009	REINFORCING STEEL, STAINLESS STEEL - -
9	2408-7800000	STRUCTURAL STEEL - -
10	2412-0000100	LONGITUDINAL GROOVING IN CONCRETE - -
11	2414-6424110	CONCRETE BARRIER RAILING - -
12	2501-0201057	PILES, STEEL, HP 10 X 57 - -
13	2507-2638650	BRIDGE WING ARMORING - EROSION STONE - -
14	2507-3250005	ENGINEERING FABRIC - -
15	2507-6800061	REVETMENT, CLASS E - -
16	2507-8029000	EROSION STONE - -
17	2526-8285000	CONSTRUCTION SURVEY - -
18	2599-9999003	ULTRA HIGH PERFORMANCE CONCRETE - -
19	2599-9999009	PILES, STEEL, HP 16 X 141 - -
20	2599-9999010	BRIDGE ABUTMENT - -
21	2599-9999010	BRIDGE APPROACH, REINFORCED, AS PER PLAN - -
22	2599-9999010	BRIDGE PIER - -
23	2599-9999010	SUPERSTRUCTURE MODULE, M50-EXTERIOR - -
24	2599-9999010	SUPERSTRUCTURE MODULE, M50-INTERIOR - -
25	2599-9999010	SUPERSTRUCTURE MODULE, M90-EXTERIOR - -
26	2599-9999010	SUPERSTRUCTURE MODULE, M90-INTERIOR - -
27	2599-9999018	DECK GRINDING - -

INDEX OF BRIDGE SHEETS

SHEET DESCRIPTIONS	SHEET NUMBER
ESTIMATED QUANTITIES	2
GENERAL NOTES	4
SITUATION PLAN	6
SITE PLAN	7
SUBSTRUCTURE LAYOUT	8
PHASE PLAN	9
MODULE CASTING	10
PIER DETAILS	11
PIER 'TYPE A'	12
PIER 'TYPE B'	14
ABUTMENT DETAILS	16
ABUTMENT 'TYPE A'	17
ABUTMENT 'TYPE B'	21
TRANSVERERSE SECTIONS	25
LONGITUDINAL SECTIONS	26
SLAB ELEVATION TABLES	29
HAUNCH DATA TABLES	30
CAMBER / HAUNCH DETAILS	31
DECK GRINDING DETAILS	32
FRAMING PLAN & DETAILS	33
BEARING DETAILS	37
M90 MODULES	39
M50 MODULES	45
BARRIER RAIL DETAILS	51
SUBDRAIN DETAILS	53
BACKFILL DETAILS	54
WING ARMORING DETAILS	55
APPROACH PLAN & DETAILS	56

DESIGN FOR 20° SKEW (R.A.)

234'-0 x 44'-0 ROLLED STEEL BEAM BRIDGE

91'-0 & 51'-0 END SPANS 92'-0 INTERIOR SPAN

ESTIMATE REFERENCE INFO

STA. 528+80.00 IA 92 ?, 2004

POTTAWATTAMIE COUNTY

IOWA DEPARTMENT OF TRANSPORTATION - HIGHWAY DIVISION

DESIGN SHEET NO. 2 OF ? FILE NO. 30846 DESIGN NO. 115

GENERAL NOTES:

THIS DESIGN IS FOR REPLACEMENT OF THE EXISTING 150'-0 X 28'-0 CONTINUOUS CONCRETE GIRDER BRIDGE (DESIGN 5152) WITH A 240'-0 X 44'-0 MODULAR ROLLED STEEL BEAM BRIDGE.

THE ROADWAY WILL BE CLOSED TO THROUGH-TRAFFIC DURING CONSTRUCTION. IT IS THE INTENT OF THIS PROJECT TO COMPLETE CONSTRUCTION ON AN ACCELERATED SCHEDULE AND LIMIT THE ROAD CLOSURE TO A MAXIMUM OF 21 CALENDAR DAYS.

THIS BRIDGE IS DESIGNED FOR HL-93 LOADING, PLUS 20 LBS. PER SQUARE FOOT OF ROADWAY FOR FUTURE WEARING SURFACE.

THE LUMP SUM BID FOR "REMOVAL OF EXISTING BRIDGE" SHALL INCLUDE REMOVAL OF THE EXISTING BRIDGE IN ACCORDANCE WITH SECTION 2401 OF THE STANDARD SPECIFICATIONS. PLANS OF THE EXISTING STRUCTURE WILL BE MADE AVAILABLE TO THE CONTRACTOR. CONTACT THE OFFICE OF CONTRACTS - HIGHWAY DIVISION - IOWA D.O.T. - AMES.

THE BRIDGE CONTRACTOR WILL BE THE ONLY CONTRACTOR AT THE SITE AND IS RESPONSIBLE FOR THE COMPLETION OF ALL WORK AS DETAILED AND NOTED IN THESE PLANS.

UTILITY COMPANIES WHOSE FACILITIES ARE SHOWN ON THE PLANS OR ARE KNOWN TO BE WITHIN THE CONSTRUCTION LIMITS SHALL BE NOTIFIED BY THE BRIDGE CONTRACTOR OF THE STARTING DATE.

CLASS 20 EXCAVATION QUANTITIES ARE BASED ON THE ASSUMPTION THAT THE BERM CONSTRUCTION IS COMPLETED PRIOR TO STARTING CONSTRUCTION OF THE ABUTMENTS AND PIERS.

IT SHALL BE THE BRIDGE CONTRACTOR'S RESPONSIBILITY TO PROVIDE SITES FOR EXCESS EXCAVATED MATERIAL. NO PAYMENT FOR OVERHAUL WILL BE ALLOWED FOR MATERIAL HAULED TO THESE SITES.

THE BRIDGE CONTRACTOR SHALL PREBORE HOLES FOR ABUTMENT PILES. HOLES SHALL BE BORED TO THE ELEVATIONS SHOWN ON THE "LONGITUDINAL SECTION ALONG CENTERLINE ROADWAY" ON DESIGN SHEET [[XX]]. PILES SHALL BE DRIVEN THROUGH THE HOLES TO AT LEAST THE SPECIFIED DESIGN BEARING.

MINIMUM CLEAR DISTANCE FROM FACE OF CONCRETE TO NEAR REINFORCING BAR IS TO BE 2" UNLESS OTHERWISE NOTED OR SHOWN.

THESE BRIDGE PLANS LABEL ALL REINFORCING STEEL WITH ENGLISH NOTATION (5a1 IS $\frac{5}{8}$ INCH DIAMETER BAR). ENGLISH REINFORCING STEEL RECEIVED IN THE FIELD MAY DISPLAY THE FOLLOWING "BAR DESIGNATION". THE "BAR DESIGNATION" IS THE STAMPED IMPRESSION ON THE REINFORCING BARS, AND IS EQUIVALENT TO THE BAR DIAMETER IN MILLIMETERS.

ENGLISH SIZE	3	4	5	6	7	8	9	10	11
BAR DESIGNATION	10	13	16	19	22	25	29	32	36

ALL REINFORCING BARS AND BARS NOTED AS DOWELS SUPPLIED FOR THIS STRUCTURE SHALL BE DEFORMED REINFORCEMENT UNLESS OTHERWISE NOTED OR SHOWN.

KEYWAY DIMENSIONS SHOWN ON THE PLANS ARE BASED ON NOMINAL DIMENSIONS UNLESS STATED OTHERWISE. THE BEVEL USED ON THE KEYWAY SHALL BE LIMITED TO 10° FROM VERTICAL.

THIS STRUCTURE SHALL BE BUILT WITH WEATHERING STEEL. ALL STRUCTURAL STEEL, EXCEPT AS NOTED, SHALL CONFORM TO ASTM A709 GRADE 50W. PAINTING REQUIREMENTS FOR THIS STRUCTURE SHALL BE IN ACCORDANCE WITH ARTICLE 2408.02, Q, OF THE STANDARD SPECIFICATIONS.

NO TORCHWORK, CUTTING, GRINDING OR DRILLING OF HOLES ON THE STRUCTURAL STEEL OF THE BRIDGE SHALL BE PERFORMED WHEN THE AIR TEMPERATURE AND STEEL TEMPERATURE ARE BELOW 40°F.

CONCRETE BARRIER RAILS PLACED USING THE SLIPFORM METHOD WILL REQUIRE THE USE OF CLASS BR CONCRETE IN ACCORDANCE WITH ARTICLE 2513.03, A, 2, OF THE STANDARD SPECIFICATIONS. CAST-IN-PLACE BARRIER RAILS SHALL USE CLASS C MIX. CLASS D CONCRETE IS NOT PERMITTED FOR CONCRETE BARRIER RAILS (CAST-IN-PLACE OR SLIPFORMED METHOD).

THE CONTRACTOR SHALL CONSTRUCT NEW BRIDGE APPROACH PAVEMENT AS NOTED AND SHOWN. THE PRICE BID FOR "BRIDGE APPROACH SECTION, REINFORCED AS PER PLAN" SHALL BE FULL COMPENSATION FOR FURNISHING AND INSTALLING P.C. CONCRETE APPROACH PAVEMENT, INCLUDING EXCAVATION REINFORCING STEEL AND JOINT MATERIAL REQUIRED.

ACCELERATED BRIDGE CONST. NOTES:

THE ACCELERATED BRIDGE CONSTRUCTION (ABC) CONCEPT FOR THIS PROJECT WAS SELECTED IN PART TO FURTHER DEVELOP IOWA D.O.T.'S EXPERIENCE WITH DESIGN AND CONSTRUCTION OF SIMPLE-SPAN, MODULAR ROLLED STEEL BEAM BRIDGES USING ULTRA-HIGH-PERFORMANCE CONCRETE (UHPC) JOINT CLOSURES. THE FOLLOWING ABC TECHNOLOGIES SHALL BE CONSIDERED REQUISITE IN THE DESIGN AND CONSTRUCTION OF THIS PROJECT:

- SIMPLE-SPAN MADE CONTINUOUS STRUCTURAL STEEL DESIGN
- PRECAST DECKED BEAM MODULAR CONSTRUCTION
- ULTRA HIGH PERFORMANCE CONCRETE (UHPC) LONGITUDINAL JOINT CLOSURES

IN ADDITION TO THE REQUISITE ABC TECHNOLOGIES NOTED ABOVE, THE DESIGN PLANS DETAIL THE FOLLOWING OPTIONAL ABC TECHNOLOGIES:

- PRECAST PILE CAPS
- BEAM-ON-PILE ABUTMENT FRAMING

THE CONTRACTOR MAY DEVELOP ALTERNATE CONSTRUCTION PROPOSALS, IN ACCORDANCE WITH SECTION 1105.15 OF THE STANDARD SPECIFICATIONS, ALLOWING THE STATE TO BENEFIT FROM REDUCED COST, WHILE MAINTAINING THE SAME OR REDUCED CONSTRUCTION SCHEDULE. TO BE CONSIDERED FOR APPROVAL ALTERNATE CONSTRUCTION PROPOSALS DEVELOPED BY THE CONTRACTOR MUST INCLUDE THE REQUISITE ABC TECHNOLOGIES NOTED IN THE PLANS AND MUST MEET OR EXCEED THE PERFORMANCE, RELIABILITY, QUALITY AND CONSTRUCTABILITY OF THE DETAILS INCLUDED IN THE PLANS. PROPOSED DESIGN MODIFICATIONS THAT AFFECT THE STRUCTURAL BEHAVIOR AND/OR PERFORMANCE OF THE STRUCTURE MUST BE DESIGNED AND SEALED BY A PROFESSIONAL ENGINEER LICENSED IN THE STATE OF IOWA.

REQUIRED SUBMITTALS:

SHOP DRAWINGS -

SHOP DRAWINGS SHALL BE SUBMITTED FOR THE FOLLOWING ITEMS SHOWN IN THE TABLE BELOW. (NOTE ADDITIONAL SHOP DRAWINGS MAY BE REQUIRED IN ACCORDANCE WITH ARTICLE 1105.03 OF THE STANDARD SPECIFICATIONS.)

SUBMITTAL REQUIREMENTS FOR SHOP DRAWINGS SHALL BE IN ACCORDANCE WITH ARTICLE 1105.03, OF THE STANDARD SPECIFICATIONS, FOR HIGHWAY AND BRIDGE CONSTRUCTION OF THE IOWA DEPARTMENT OF TRANSPORTATION.

	STRUCTURAL STEEL FRAMING COMPONENTS
	STEEL BEARING COMPONENTS
	DECK DRAINS

OTHER SUBMITTALS -

THE CONTRACTOR SHALL PROVIDE SUBMITTALS FOR THE FOLLOWING ITEMS SHOWN IN THE TABLE BELOW.

REQUIREMENTS FOR THE FOLLOWING SUBMITTALS SHALL BE IN ACCORDANCE WITH THE DESIGN PLANS.

	WELD PROCEDURE PRE - APPROVALS
	MODULE LIFTING PLAN
	CONSTRUCTION SCHEDULE
	PIER CAP TEMP. SUPPORT PLAN (AS REQUIRED)

SPECIFICATIONS:

DESIGN: AASHTO LRFD 5th Ed, SERIES OF 2010, EXCEPT AS NOTED IN THE CURRENT IOWA BRIDGE DESIGN MANUAL.

CONSTRUCTION: IOWA DEPARTMENT OF TRANSPORTATION STANDARD SPECIFICATIONS FOR HIGHWAY AND BRIDGE CONSTRUCTION, SERIES 2012, PLUS APPLICABLE GENERAL SUPPLEMENTAL SPECIFICATIONS, DEVELOPMENTAL SPECIFICATIONS, INCLUDING DS-12001 "COLORED SEALER COATING FOR STRUCTURAL CONCRETE" AND DS-12039 "INSTALLING ADHESIVE-BONDED ANCHORS AND DOWELS FOR TRAFFIC RAILING", SUPPLEMENTAL SPECIFICATIONS, AND SPECIAL PROVISIONS, INCLUDING SP-120077 "VIBRATION MONITORING" SHALL APPLY TO CONSTRUCTION WORK ON THIS PROJECT.

DESIGN STRESSES:

DESIGN STRESSES FOR THE FOLLOWING MATERIALS ARE IN ACCORDANCE WITH THE AASHTO LRFD BRIDGE DESIGN SPECIFICATIONS, 5th Ed, SERIES OF 2010.

REINFORCING STEEL IN ACCORDANCE WITH LRFD AASHTO SECTION 5, GRADE 60.

CONCRETE IN ACCORDANCE WITH LRFD AASHTO SECTION 5, f'c = 4.0 KSI, EXCEPT PRESTRESSED BEAM CONCRETE AS NOTED.

ULTRA - HIGH - PERF. CONC.

STRUCTURAL STEEL IN ACCORDANCE WITH LRFD AASHTO SECTION 6. ASTM A709 GRADE 36 AND GRADE 50 (AASHTO M270 GRADE 36 AND GRADE 50).

BRIDGE DECK DIMENSIONS TABLE

NO.	ITEM	UNIT	QUANTITY
1	DECK LENGTH	L.F.	
2	MINIMUM DECK WIDTH	L.F.	
3	MAXIMUM DECK WIDTH	L.F.	
4	DECK AREA	S.F.	

1. DECK LENGTH IS MEASURED FROM FACE-TO-FACE OF PAVING NOTCHES ALONG THE CENTERLINE OF THE ROADWAY.
2, 3. DECK WIDTHS ARE MEASURED FROM OUT-TO-OUT OF DECK PERPENDICULAR TO THE CENTERLINE OF ROADWAY.
4. DECK AREA IS TO BE BASED ON THE FACE-TO-FACE PAVING NOTCH DISTANCE AND OUT-TO-OUT DECK DIMENSIONS.

TRAFFIC CONTROL PLAN

NOTE: THE STRUCTURE IS BEING CONSTRUCTED ON A RELOCATION AND NEW BRIDGE WILL NOT OPEN TO TRAFFIC UNTIL COMPLETION OF CONSTRUCTION. REFER TO THE TRAFFIC CONTROL PLAN SHOWN ELSEWHERE IN THESE PLANS.

POLLUTION PREVENTION PLAN

NOTE: POLLUTION PREVENTION PLAN SHOWN ELSEWHERE IN THESE PLANS.

DESIGN FOR 20° SKEW (R.A.)

234'-0 x 44'-0 ROLLED STEEL BEAM BRIDGE

91'-0 & 51'-0 END SPANS 92'-0 INTERIOR SPAN

GENERAL NOTES

STA. 528+80.00 IA 92 ?, 2004

POTTAWATTAMIE COUNTY

IOWA DEPARTMENT OF TRANSPORTATION - HIGHWAY DIVISION

DESIGN SHEET NO. 3 OF ? FILE NO. 30846 DESIGN NO. 115

DESIGN FOR 20° SKEW (R.A.)

234'-0 x 44'-0 ROLLED
STEEL BEAM BRIDGE

91'-0 & 51'-0 END SPANS 92'-0 INTERIOR SPAN

GENERAL NOTES - CONTINUED

STA. 528+80.00 IA 92 ?, 2004

POTTAWATTAMIE COUNTY

IOWA DEPARTMENT OF TRANSPORTATION - HIGHWAY DIVISION

DESIGN SHEET NO. 4 OF ? FILE NO. 30846 DESIGN NO. 115

BENCH MARK NO. 501 STA. 529+82.22, -20.2127 FND X NE CORNER BRIDGE, ELEV. 1103.648

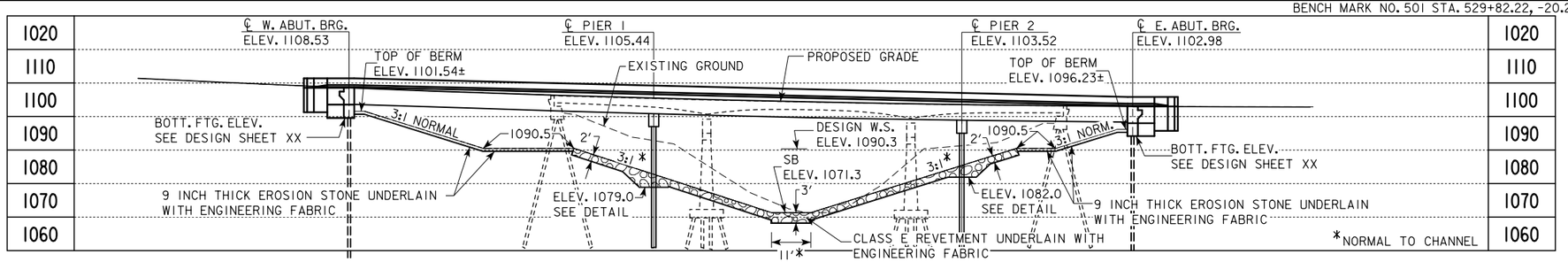

NOTES:

1. TOP OF BRIDGE DECK CROWN 0.03 BELOW PROFILE GRADE.
2. CONTINUE THE EROSION STONE BERM SLOPE PROTECTION ALONG THE BENCH TO THE TOP OF REVETMENT.
3. STA. 529+00.06 150' X 28' CONT. CONC. GIRDER BRIDGE (DESIGN NO. 5152) TO BE REMOVED.
4. ANY ENCOUNTERED REMNANTS OF OLD BRIDGE WOOD SUBSTRUCTURE TO BE REMOVED AS NECESSARY TO COMPLETE THE WORK.

LONGITUDINAL SECTION ALONG ℄ APPROACH ROADWAY

NOTES TO FINAL DESIGNER:

1. CHECK WITH JIM SCHOENROCK TO VERIFY UTILITIES.
2. TL-4 BARRIER RAIL.
3. PILE BENT PIERS PROPOSED.

G1= -5.870% G2= +4.980%

VPI STA = 530+15.00 VC = 760.00'
VPI ELEV = 1092.60

PROPOSED PROFILE GRADE IA 92

HYDRAULIC DATA

DRAINAGE AREA = 16.6 SQ. MI.
STREAM SLOPE = 10.6 FT./MI.
AVG. LOW WATER STAGE = 1072.3

Q_{50} = 4530 CFS
STAGE = 1090.3
BACKWATER = 0.03 FT.
AVG. BRIDGE VELOCITY = 3.7 FPS

Q_{100} = 5460 CFS
STAGE = 1091.3
BACKWATER = 0.06 FT.

Q_{200} = 6290 CFS
STAGE = 1092.0
CALCULATED DESIGN SCOUR = 1068.3

Q_{500} = 7330 CFS
STAGE = 1092.7
CALCULATED CHECK SCOUR = 1068.3

ROADWAY OVERTOP 1102.84
STA. 530+46.17

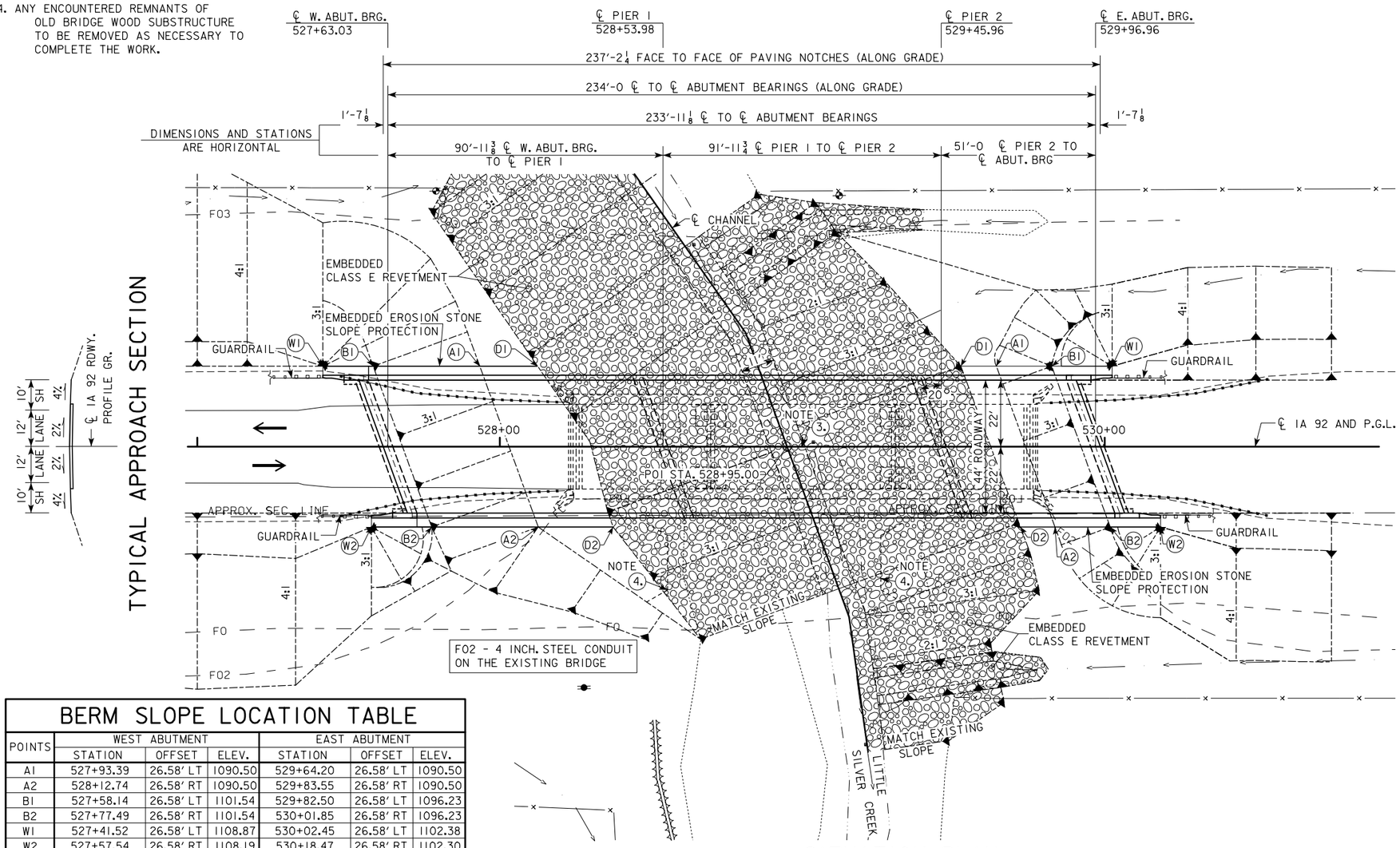

TYPICAL APPROACH SECTION

SITUATION PLAN

UTILITIES LEGEND:

-POWER POLE - MIDAMERICAN ENERGY COMPANY
FO -FIBER OPTIC - AT&T TRANSMISSION
FO2 -FIBER OPTIC -MCI
FO3 -FIBER OPTIC - FRONTIER COMMUNICATIONS OF IOWA
NOT SHOWN- FIBER OPTIC -LIGHTCORE (DIGITAL TELEPORT-A)

LOCATION

IA 92 OVER LITTLE SILVER CREEK
T-74N R-42W
SECTION 2&11
KEG CREEK TOWNSHIP
POTTAWATTAMIE COUNTY
FHWA NO. 43821
BRIDGE MAINT. NO. 7816.6S092
LATITUDE 41.232779°
LONGITUDE -95.634139°

BERM SLOPE LOCATION TABLE

POINTS	WEST ABUTMENT			EAST ABUTMENT		
	STATION	OFFSET	ELEV.	STATION	OFFSET	ELEV.
A1	527+93.39	26.58' LT	1090.50	529+64.20	26.58' LT	1090.50
A2	528+12.74	26.58' RT	1090.50	529+83.55	26.58' RT	1090.50
B1	527+58.14	26.58' LT	1101.54	529+82.50	26.58' LT	1096.23
B2	527+77.49	26.58' RT	1101.54	530+01.85	26.58' RT	1096.23
W1	527+41.52	26.58' LT	1108.87	530+02.45	26.58' LT	1102.38
W2	527+57.54	26.58' RT	1108.19	530+18.47	26.58' RT	1102.30
D1	528+12.51	26.58' LT	1090.50	529+52.44	26.58' LT	1090.50
D2	528+37.49	26.58' RT	1090.50	529+72.15	26.58' RT	1090.50

BERM SLOPE ELEVATIONS REFLECT THE GRADING SURFACE

DESIGN FOR 20° SKEW (R.A.)

234'-0 x 44'-0 ROLLED STEEL BEAM BRIDGE

91'-0 & 51'-0 END SPANS 92'-0 INTERIOR SPAN

SITUATION PLAN

STA. 528+80.00 IA 92 ?, 2004

POTTAWATTAMIE COUNTY

IOWA DEPARTMENT OF TRANSPORTATION - HIGHWAY DIVISION

DESIGN SHEET NO. 5 OF ? FILE NO. 30846 DESIGN NO. 115

DESIGN TEAM CJC / PES | POTTAWATTAMIE COUNTY | PROJECT NUMBER BRF-092-1(64)--38-78 | SHEET NUMBER 6

BENCH MARK NO. 501 STA. 529+82.22, -20.2127 FND X NE CORNER BRIDGE, ELEV. 1103.648

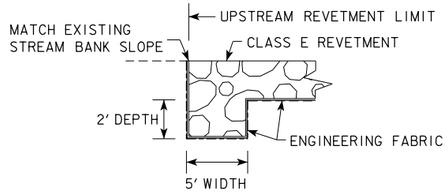

SECTION THROUGH KEY-IN TRENCH

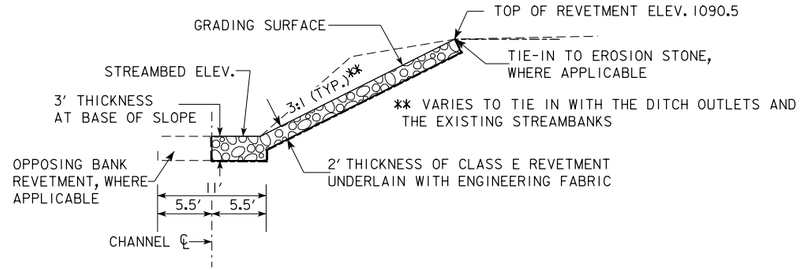

TYPICAL CROSS SECTION
EMBEDDED RIPRAP BANK PROTECTION

ESTIMATED BERM ARMORING QUANTITIES

LOCATION	REVETMENT CL. E (TON)	EROSION STONE (TON)	ENGINEERING FABRIC (SY)	EXCAVATION (CY)
BERM/BANK LINING - WEST	1527.2	155.1	1771.8	1050.3
BERM/BANK LINING - EAST	1500.9	81.4	1599.4	988.3
TOTALS	3028.1	236.5	3371.2	2038.6

EXCAVATION QUANTITY CALCULATED FROM GRADING SURFACE.

PIER SCOUR MITIGATION NOTES:

PIER SCOUR MITIGATION RIPRAP PROVIDED. LOCAL PIER SCOUR NOT INCLUDED IN DESIGN/CHECK SCOUR ELEVATIONS.

NBIS INSPECTION SHOULD VERIFY INTEGRITY OF RIPRAP.

CARRY PIER SCOUR MITIGATION RIPRAP 4 FEET BEYOND THE EDGE OF PILING UPSTREAM AND DOWNSTREAM.

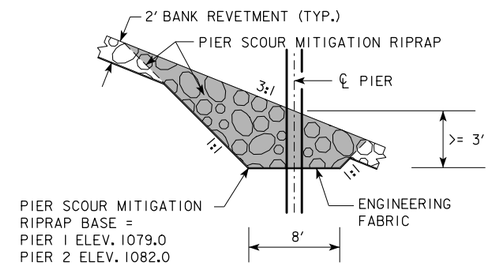

TYPICAL PILE BENT RIPRAP
CROSS SECTION

CHANNEL GRADING CONTROL POINTS:

CH1 = 529+21.79, 100.94' RT, STREAMBED ELEV. = 1071.09
CH2 = 529+15.52, 56.38' RT, STREAMBED ELEV. = 1071.18
CH3 = 528+81.32, 37.59' LT, STREAMBED ELEV. = 1071.38
CH4 = 528+29.70, 111.31' LT, STREAMBED ELEV. = 1071.56

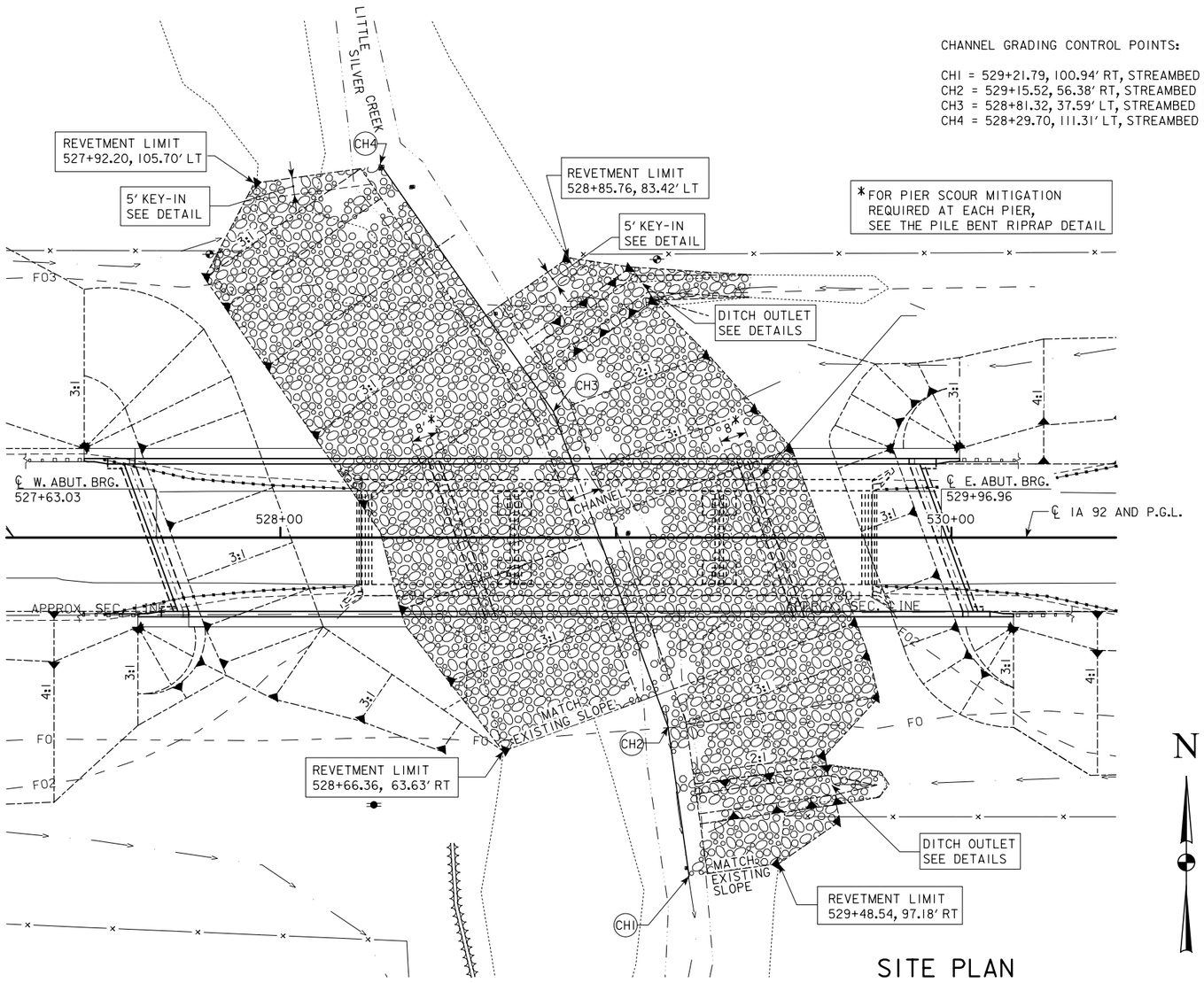

SITE PLAN

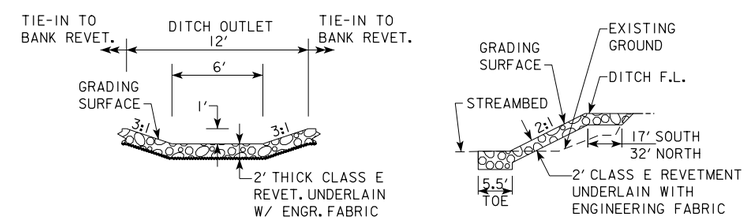

TYPICAL SECTIONS AT DITCH OUTLET

DESIGN FOR 20° SKEW (R.A.)

234'-0 x 44'-0 ROLLED STEEL BEAM BRIDGE

91'-0 & 51'-0 END SPANS 92'-0 INTERIOR SPAN

SITUATION PLAN - SITE

STA. 528+80.00 IA 92 ?, 2004

POTTAWATTAMIE COUNTY

IOWA DEPARTMENT OF TRANSPORTATION - HIGHWAY DIVISION

DESIGN SHEET NO. 6 OF ? FILE NO. 30846 DESIGN NO. 115

DESIGN TEAM CJC / PES | POTTAWATTAMIE COUNTY | PROJECT NUMBER BRF-092-1(64)--38-78 | SHEET NUMBER 7

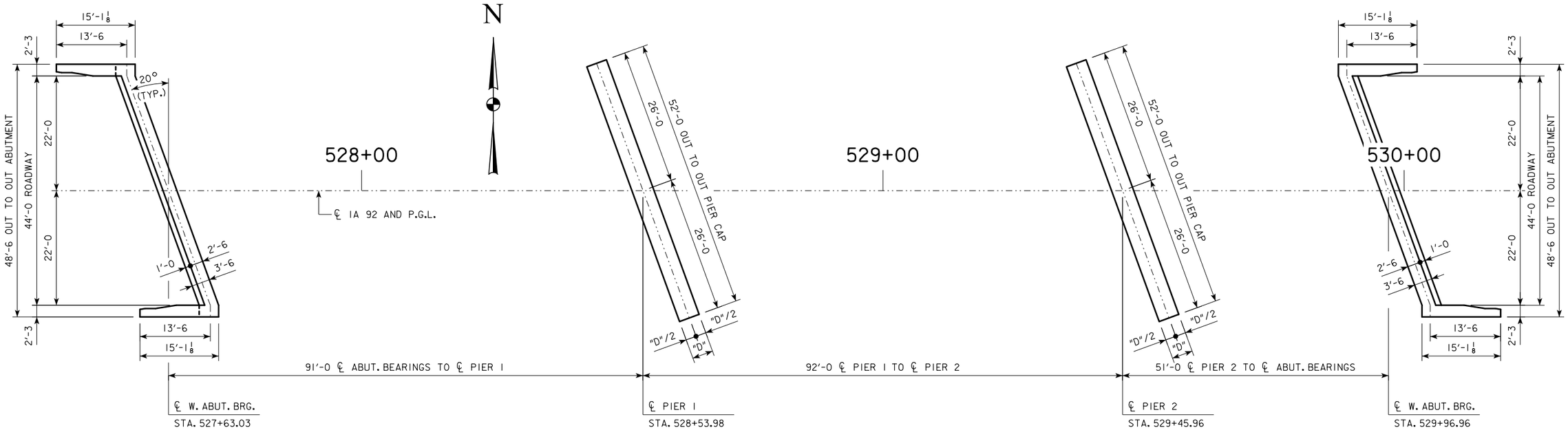

STAKING DIAGRAM

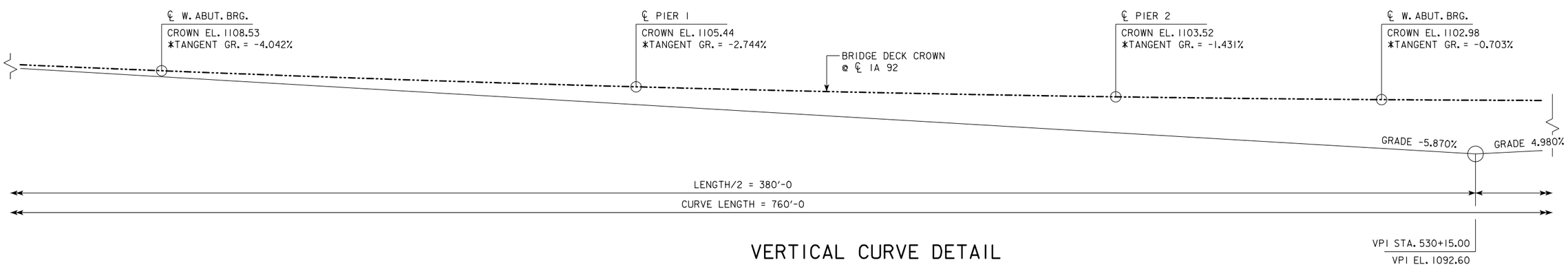

VERTICAL CURVE DETAIL

*: TANGENT GRADE DATA INCLUDED FOR INFORMATION ONLY

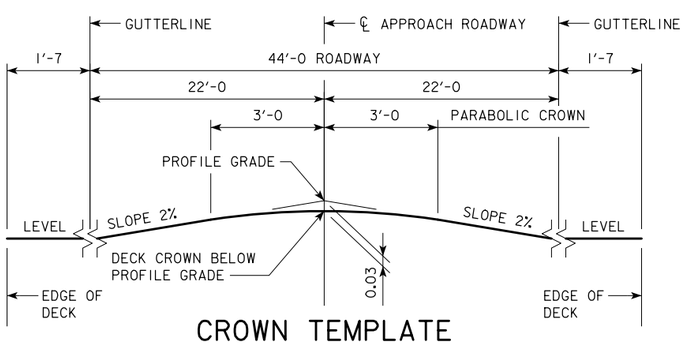

CROWN TEMPLATE

(AT ℄ APPROACH ROADWAY)

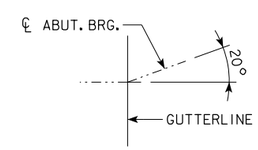

SKEW BREAKBACK DETAIL

DESIGN FOR 20° SKEW (R.A.)

234'-0 x 44'-0 ROLLED STEEL BEAM BRIDGE

91'-0 & 51'-0 END SPANS 92'-0 INTERIOR SPAN

GEOMETRIC CONTROL PLAN

STA. 528+80.00 IA 92 ?, 2004

POTTAWATTAMIE COUNTY

IOWA DEPARTMENT OF TRANSPORTATION - HIGHWAY DIVISION

DESIGN SHEET NO. 7 OF ? FILE NO. 30846 DESIGN NO. 115

DESIGN TEAM CJC / PES	POTTAWATTAMIE COUNTY	PROJECT NUMBER BRF-092-1(64)--38-78	SHEET NUMBER 8

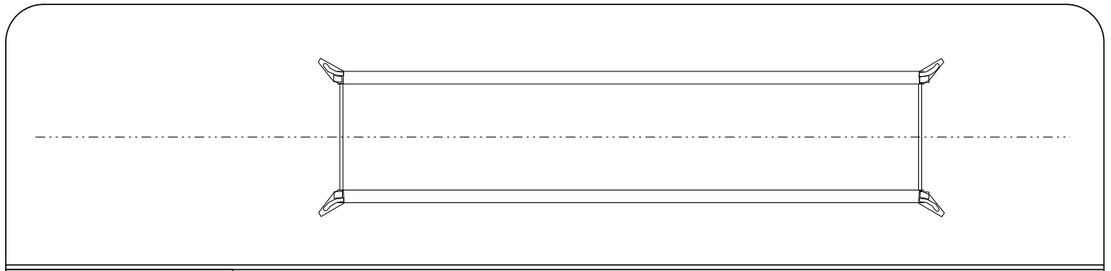

PHASE I

- CLOSE EXISTING BRIDGE TO TRAFFIC

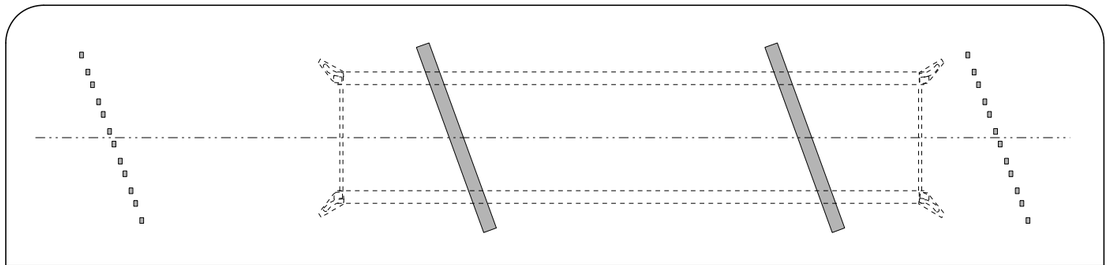

PHASE II

- DEMOLISH EXISTING BRIDGE
- INSTALL PILING
- INSTALL ABUTMENT & PIER BEAM SEATS

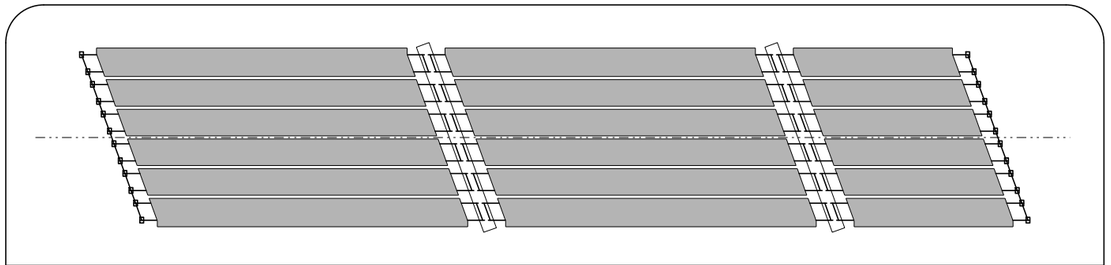

PHASE III

- INSTALL DECKED BEAM MODULES

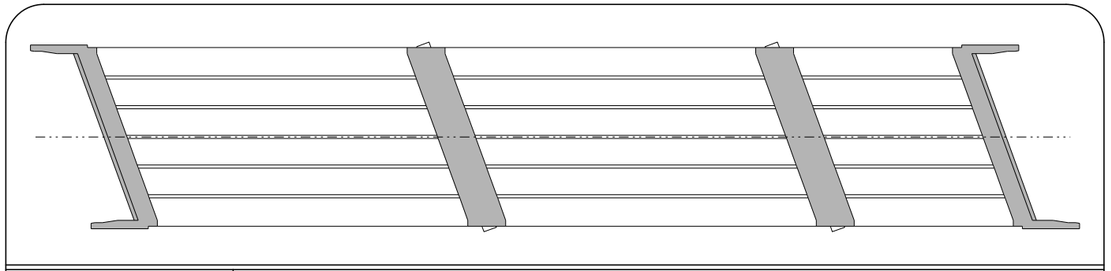

PHASE IV

- CONSTRUCT ABUTMENTS
- CONSTRUCT MONOLITHIC DECK CLOSURE AT PIERS

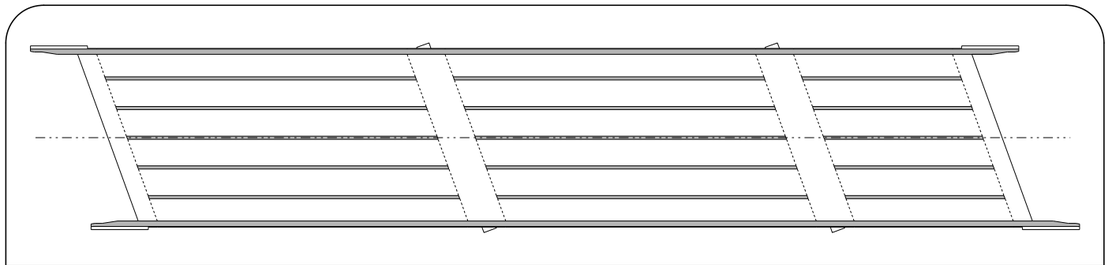

PHASE V

- CONSTRUCT LONGITUDINAL DECK CLOSURES
- CONSTRUCT BARRIER RAIL
- CONSTRUCT APPROACHES (NOT SHOWN)

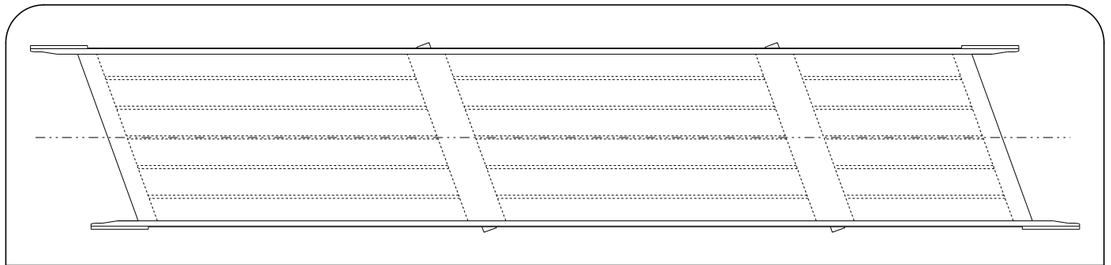

PHASE VI

- OPEN NEW BRIDGE TO TRAFFIC

CONSTRUCTION PHASING DIAGRAM

DESIGN FOR 20° SKEW (R.A.)

234'-0 x 44'-0 ROLLED STEEL BEAM BRIDGE

91'-0 & 51'-0 END SPANS 92'-0 INTERIOR SPAN

CONSTRUCTION PHASING DIAGRAM

STA. 528+80.00 IA 92 ?, 2004

POTTAWATTAMIE COUNTY

IOWA DEPARTMENT OF TRANSPORTATION - HIGHWAY DIVISION

DESIGN SHEET NO. 8 OF ? FILE NO. 30846 DESIGN NO. 115

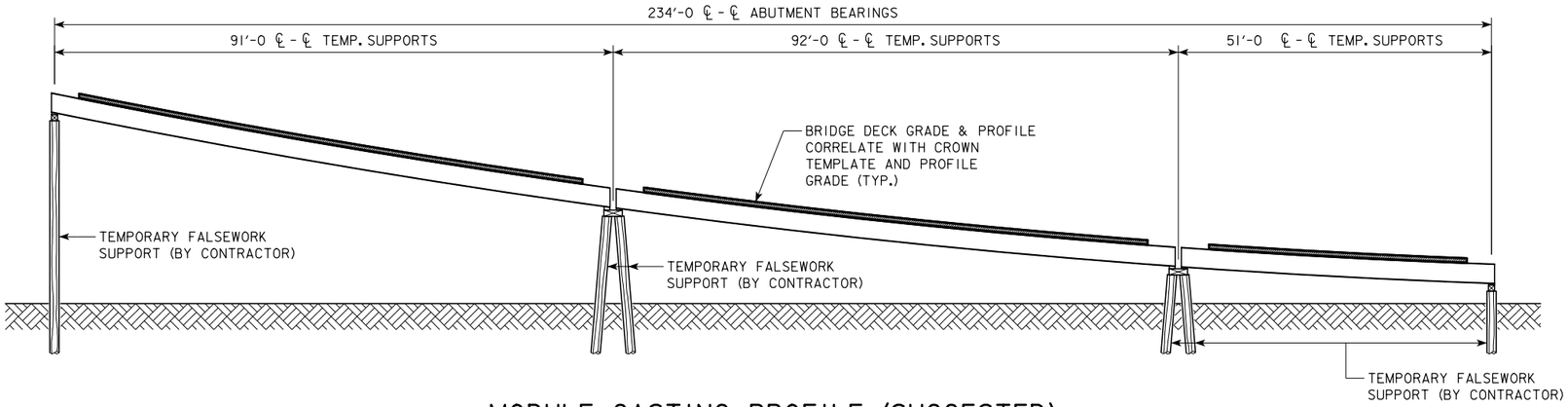

MODULE CASTING PROFILE (SUGGESTED)

(PROFILE GRADE VERTICAL SCALE EXAGGERATED 5X FOR ILLUSTRATION)
(TEMPORARY SUPPORTS SHOWN FOR ILLUSTRATION ONLY)

REFER TO "GEOMETRIC CONTROL PLAN" FOR PROFILE GRADE AND CROEN TEMPLATE DATA

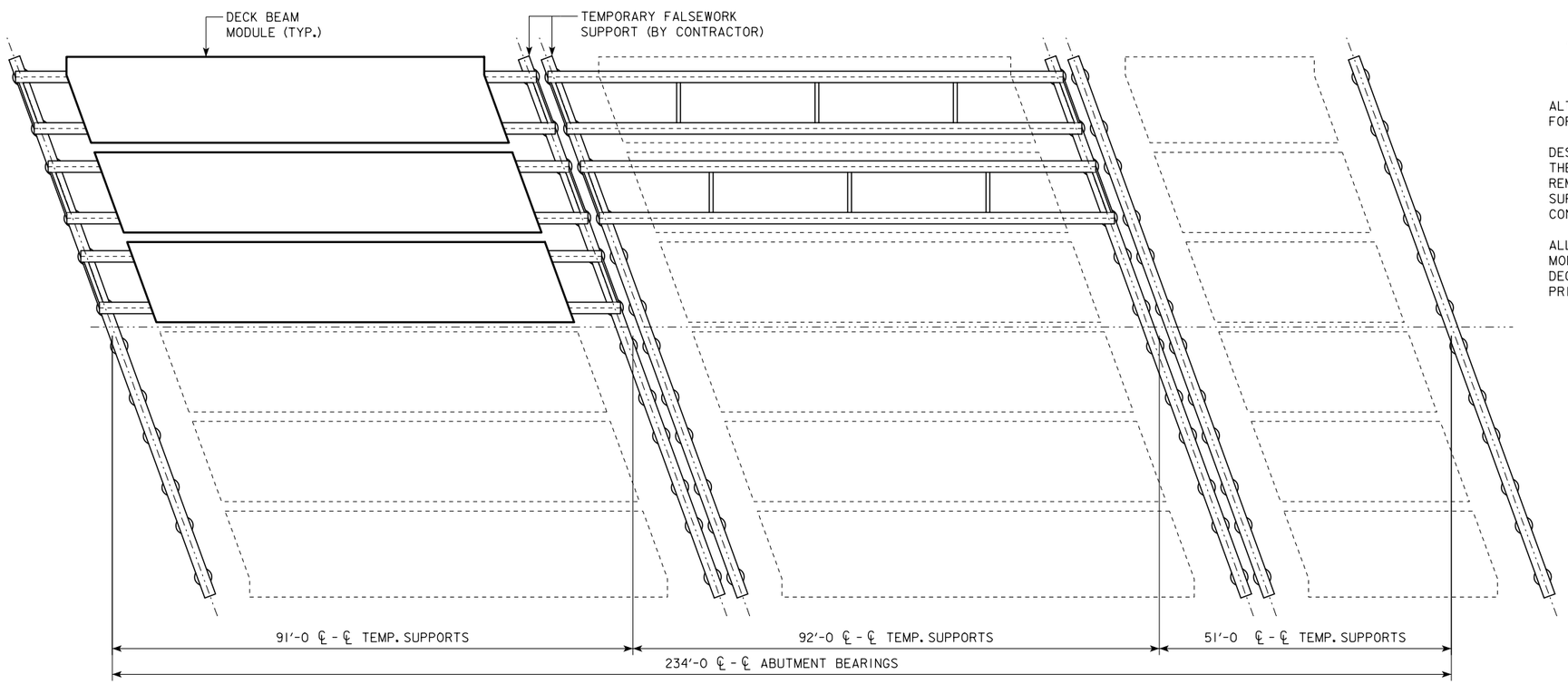

MODULE CASTING PLAN (SUGGESTED)

(TEMPORARY SUPPORTS SHOWN FOR ILLUSTRATION ONLY)

MODULE CASTING NOTES:

THE CONTRACTOR SHALL BE REQUIRED TO SUBMIT A MODULE CASTING PLAN FOR REVIEW AND APPROVAL BY THE ENGINEER. THE MODULE CASTING PLAN SHALL INCLUDE, BUT SHALL NOT BE LIMITED TO THE FOLLOWING:

- CASTING SITE LOCATION
- GENERAL SEQUENCE OF CASTING OPERATIONS
- DESCRIPTION OF TEMPORARY SUPPORTS
- QUALITY CONTROL AND GEOMETRIC CONTROL MEASURES PROPOSED TO FACILITATE PROPER FIT IN THE FINAL CONSTRUCTED CONDITION
- PROPOSED SCHEDULE INCLUDING MINIMUM WAITING PERIODS FOR CURING, FORM STRIPPING, TRANSPORTING, AND LOADING OF PRECAST COMPONENTS

THE CONTRACTOR IS STRONGLY ENCOURAGED COMBINE FRAMING / CASTING OPERATIONS FOR AS MANY ADJACENT MODULES AS PRACTICABLE, UNDER TEMPORARY SUPPORT CONDITIONS THAT CORRESPOND WITH THE RELATIVE POSITION (LOCATION AND ELEVATION) OF THE DESIGN BRIDGE SEATS. IOWA D.O.T. HAS SUCCESSFULLY COMPLETED A SIMILAR MODULAR BRIDGE PROJECT IN THE PAST (POTTAWATTAMIE DESIGN III) WHERE CONSTRUCTION OF THE ENTIRE SUPERSTRUCTURE WAS SYNCHRONIZED AND THE MODULAR DECK SECTIONS WERE PLACED CONCURRENTLY WITH A PAVING MACHINE.

THE FOLLOWING IS A SUGGESTED CASTING PROCEDURE FOR CONSTRUCTION OF THE DECKED MODULES:

- POSITION ALL STRUCTURAL STEEL FRAMING COMPONENTS FOR ALL MODULES TO CORRESPOND WITH THE RELATIVE LOCATION(S) AND ELEVATION(S) OF THE FINAL CONSTRUCTED CONDITION. SUPPORT STRUCTURAL STEEL FRAMING COMPONENTS ONLY AT DESIGNATED BEARING LOCATIONS TO ALLOW FOR ACCURATE DEFLECTION OF THE MODULAR UNITS DURING PRECASTING OF THE DECK SECTIONS.
- POSITION TRANSVERSE DECK REINFORCING STEEL FOR OPTIMIZED BAR STAGGER BETWEEN ADJACENT MODULES.
- PLACE CONCRETE FOR ALL MODULES IN ONE COMBINED POUR, USING FORMED BLOCKOUTS AT THE LOCATIONS OF DESIGN CONSTRUCTION JOINTS. CONTROL FINISHED CONCRETE SURFACE TO ACCOUNT FOR THE DESIGN DECK THICKNESS, SKEW, CROWN PROFILE, AND PROFILE GRADE.
- IMPLEMENT OTHER QUALITY CONTROL / QUALITY ASSURANCE MEASURES AS NECESSARY TO ENSURE PROPER FIT OF DECKED MODULAR COMPONENTS IN THE FINAL CONSTRUCTED CONDITION.

ALTERNATE CASTING PROCEDURES MAY BE SUBMITTED BY THE CONTRACTOR FOR REVIEW.

DESIGN AND SAFETY OF ANY TEMPORARY SUPPORTS REQUIRED SHALL BE THE RESPONSIBILITY OF THE CONTRACTOR. TEMPORARY SUPPORTS SHALL REMAIN THE PROPERTY OF THE CONTRACTOR AND ALL TEMPORARY SUPPORTS WITHIN DOT RIGHT-OF-WAY SHALL BE REMOVED BY THE CONTRACTOR PRIOR TO COMPLETION OF THE PROJECT.

ALL COSTS ASSOCIATED WITH CONSTRUCTION OF PRECAST DECKED MODULES, INCLUDING TEMPORARY SUPPORT AND TRANSPORTATION OF DECKED MODULES, AS REQUIRED, SHALL BE INCIDENTAL TO THE INDIVIDUAL PRICE BIDS FOR "SUPERSTRUCTURE MODULE".

DESIGN FOR 20° SKEW (R.A.)

234'-0 x 44'-0 ROLLED STEEL BEAM BRIDGE

91'-0 & 51'-0 END SPANS 92'-0 INTERIOR SPAN

MODULE CASTING DETAILS

STA. 528+80.00 IA 92 ?, 2004

POTTAWATTAMIE COUNTY

IOWA DEPARTMENT OF TRANSPORTATION - HIGHWAY DIVISION

DESIGN SHEET NO. 9 OF ? FILE NO. 30846 DESIGN NO. 115

BENCH MARK NO. 501 STA. 529+82.22, -20.2127 FND X NE CORNER BRIDGE, ELEV. 1103.648

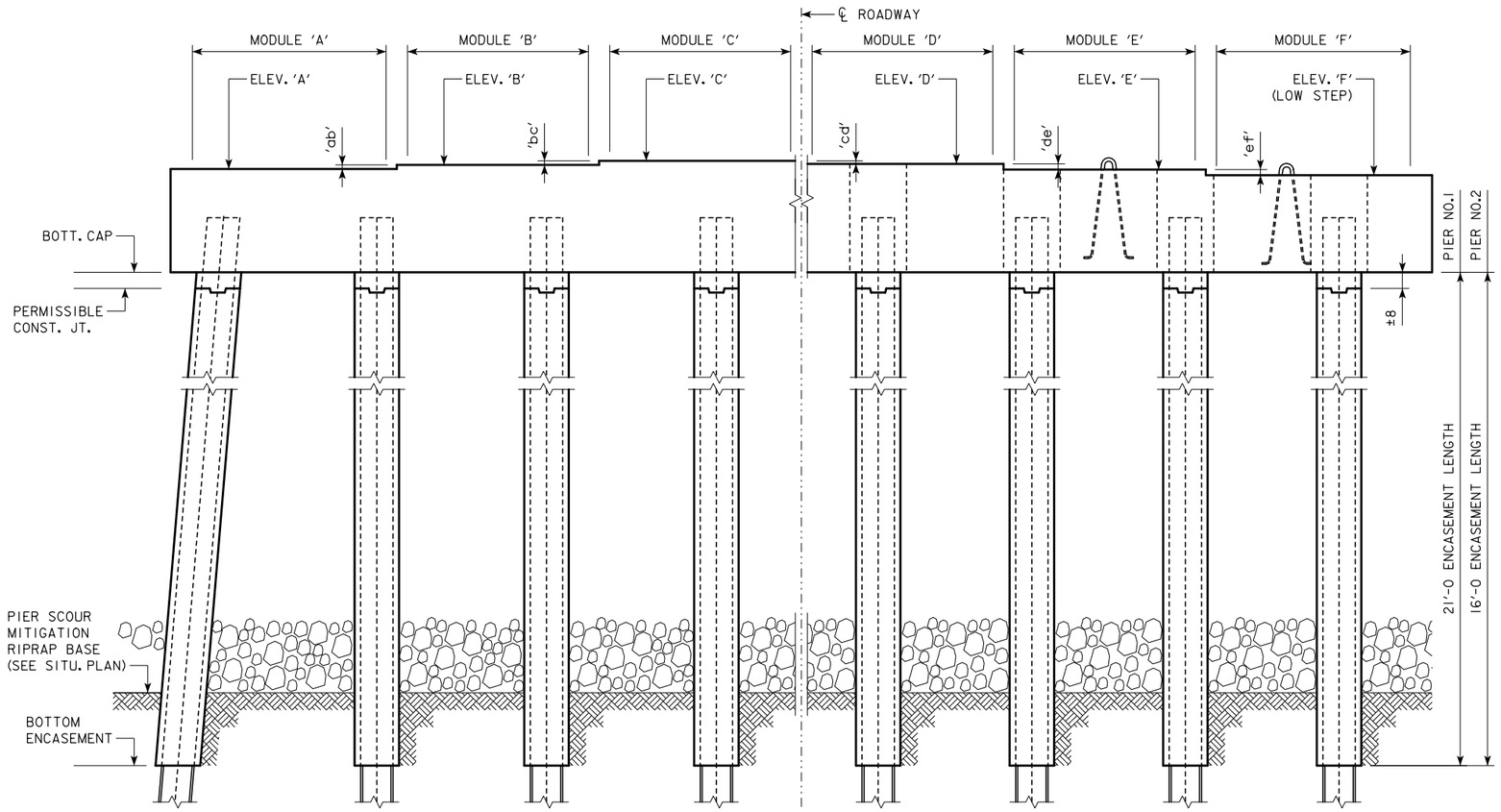

HALF ELEVATION - 'TYPE A' PIER
(CAST-IN-PLACE CAP; CAST-IN-PLACE PILE ENCASEMENT)
(LOOKING EAST)

HALF ELEVATION - 'TYPE B' PIER
(PRECAST CAP; CAST-IN-PLACE PILE ENCASEMENT)
(LOOKING EAST)

PIER NOTES:

BRIDGE PIERS FOR THIS PROJECT SHALL CONSIST OF 'TYPE A' OR 'TYPE B' PIERS AS DETAILED IN THESE PLANS. THE SELECTED PIER TYPE SHALL BE THE SAME FOR PIER 1 AND PIER 2.

PILE DESIGN AND CONSTRUCTION CONTROL REQUIREMENTS SHALL BE THE SAME FOR 'TYPE A' AND 'TYPE B' PIER PILES. REFER TO PILE NOTES AND PIER PILE TABLES.

CONSTRUCTION OF PILE ENCASEMENT(S) SHALL BE PERMITTED AFTER PLACEMENT OF THE PIER CAPS. THE CONTRACTOR SHALL BE REQUIRED TO SUBMIT A TEMPORARY SUPPORT PLAN FOR PIER CAPS THAT ARE CONSTRUCTED PRIOR TO FULL MATURITY OF THE PILE ENCASEMENT CONCRETE, SUBJECT TO REVIEW AND APPROVAL BY THE ENGINEER. FIELD WELDING OF BRACKETS TO THE PILES SHALL BE DISCOURAGED AS A MEANS OF TEMPORARY PIER CAP SUPPORT.

MINIMUM CLEAR DISTANCE FROM FACE OF CONCRETE TO NEAR REINFORCING BAR IS TO BE 2 INCHES UNLESS OTHERWISE NOTED OR SHOWN.

REINFORCING IS TO BE SECURELY WIRED IN PLACE BEFORE CONCRETE IS POURED.

THE LUMP SUM PRICE BID FOR "BRIDGE PIER" SHALL INCLUDE ALL COSTS OF MATERIALS AND LABOR FOR CONSTRUCTION OF PIER CAPS AND PILE ENCASEMENT, INCLUDING EXCAVATION, CAST-IN-PLACE AND PRECAST STRUCTURAL CONCRETE, PORTLAND CEMENT GROUT, REINFORCING STEEL, STRUCTURAL STEEL, AND TEMPORARY SUPPORTS, AS REQUIRED.

MATERIALS AND LABOR FOR PIER PILES SHALL BE INCLUDED IN THE PRICE BID FOR "PILES, STEEL, HP 16 X 141".

PILE NOTES:

THE CONTRACT LENGTH OF THE PIER PILES IS BASED ON THE DESIGN PARAMETERS LISTED IN THE "PIER PILE DESIGN (LRFD)" TABLE.

THE REQUIRED NOMINAL AXIAL BEARING RESISTANCE FOR ABUTMENT PILES AT END OF DRIVE (EOD) IS BASED ON THE PARAMETERS LISTED IN THE "PIER PILE CONST. CONTROL (LRFD)" TABLE.

PIER PILES SHALL BE DRIVEN UNTIL DESIGN BEARING IS ACHIEVED AND THE PILES EXCEED THE MINIMUM PENETRATION DEPTH NOTED IN THE PLANS. THESE REQUIREMENTS SUPERSEDE THE REQUIREMENTS NOTED IN SECTION 2501.03,0,2 OF THE STANDARD SPECIFICATIONS. CONSTRUCTION CONTROL REQUIRES A WEAP ANALYSIS WITH BEARING GRAPH.

PIER PILE DESIGN (LRFD)

DESIGN PARAMETER	PIER 1	PIER 2
SOIL CLASSIFICATION	XXXX	XXXX
GEOTECH. RESIST. FACTOR, "PHI" - SOIL	XXXX	XXXX
GEOTECH. RESIST. FACTOR, "PHI" - ROCK	XXXX	XXXX
TOTAL FACTORED AXIAL LOAD, "PU" (KIPS)	XXXX	XXXX
NO. PILES	8	8
PILE TYPE (STEEL HP-SECTION)	HP 16 X 141	HP 16 X 141
CONTRACT LENGTH (FT)	XXXX	XXXX

PIER PILE CONST. CONTROL (LRFD)

DESIGN PARAMETER	PIER 1	PIER 2
SOIL CLASSIFICATION	XXXX	XXXX
GEOTECH. RESIST. FACTOR, "PHI" - SOIL	XXXX	XXXX
GEOTECH. RESIST. FACTOR, "PHI" - ROCK	XXXX	XXXX
NOMINAL AXIAL BEARING RESISTANCE (TONS)	XXXX	XXXX

PIER ELEVATIONS

LOCATION	PIER 1	PIER 2
LOW STEP	XXX.xx	XXX.xx
BOTTOM CAP	XXX.xx	XXX.xx
BOTTOM ENCASEMENT	XXX.xx	XXX.xx

BEAM SEAT ELEV.

LOCATION	PIER 1	PIER 2
ELEV. 'A'	XXX.xx	XXX.xx
ELEV. 'B'	XXX.xx	XXX.xx
ELEV. 'C'	XXX.xx	XXX.xx
ELEV. 'D'	XXX.xx	XXX.xx
ELEV. 'E'	XXX.xx	XXX.xx
ELEV. 'F'	XXX.xx	XXX.xx

CAP STEP HEIGHT

STEP	PIER 1	PIER 2
'ab'	XXX.xx	XXX.xx
'bc'	XXX.xx	XXX.xx
'cd'	XXX.xx	XXX.xx
'de'	XXX.xx	XXX.xx
'ef'	XXX.xx	XXX.xx

NOTE: BEAM SEAT ELEVATIONS AND CAP STEPS HEIGHT ARE THE SAME FOR 'TYPE A' AND 'TYPE B' PIERS

EST. QUANTITIES - TWO BRIDGE PIERS

ITEM	UNIT	PIER 1	PIER 2	TOTAL
BRIDGE PIER	LS	1.0	1.0	2.0
PILES, STEEL, HP 16 x 141	LF	XXX	XXX	XXX

DESIGN FOR 20° SKEW (R.A.)

234'-0 x 44'-0 ROLLED STEEL BEAM BRIDGE

91'-0 & 51'-0 END SPANS 92'-0 INTERIOR SPAN

PIER DETAILS - GENERAL

STA. 528+80.00 IA 92 ?, 2004

POTTAWATTAMIE COUNTY

IOWA DEPARTMENT OF TRANSPORTATION - HIGHWAY DIVISION

DESIGN SHEET NO. 10 OF ? FILE NO. 30846 DESIGN NO. 115

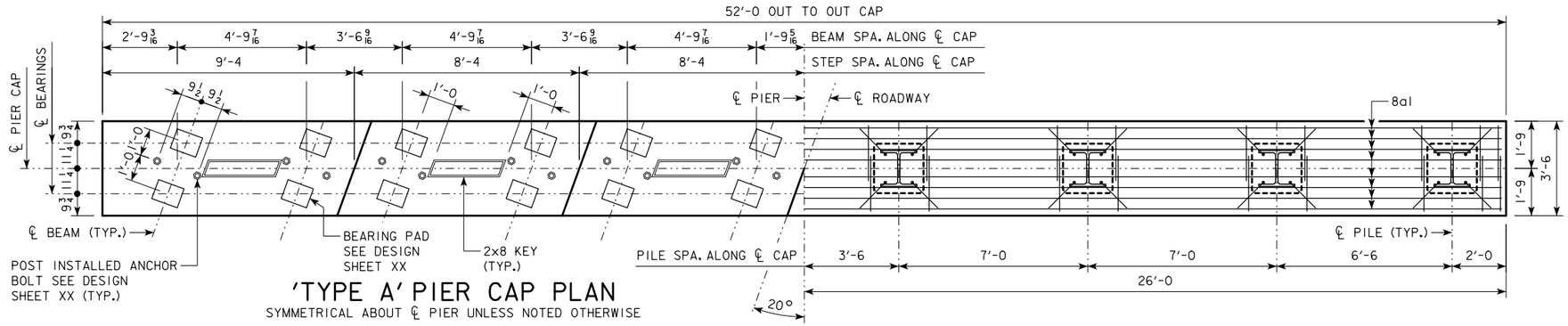

'TYPE A' PIER CAP PLAN

SYMMETRICAL ABOUT ℄ PIER UNLESS NOTED OTHERWISE

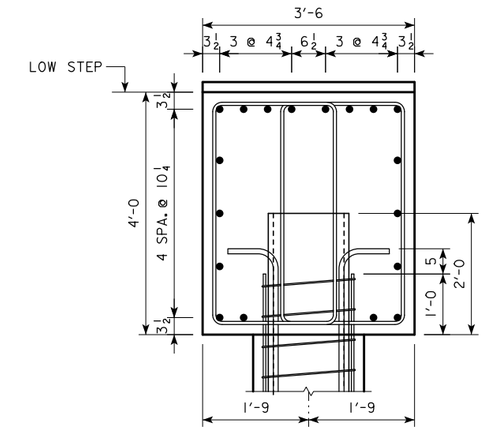

SECTION A-A

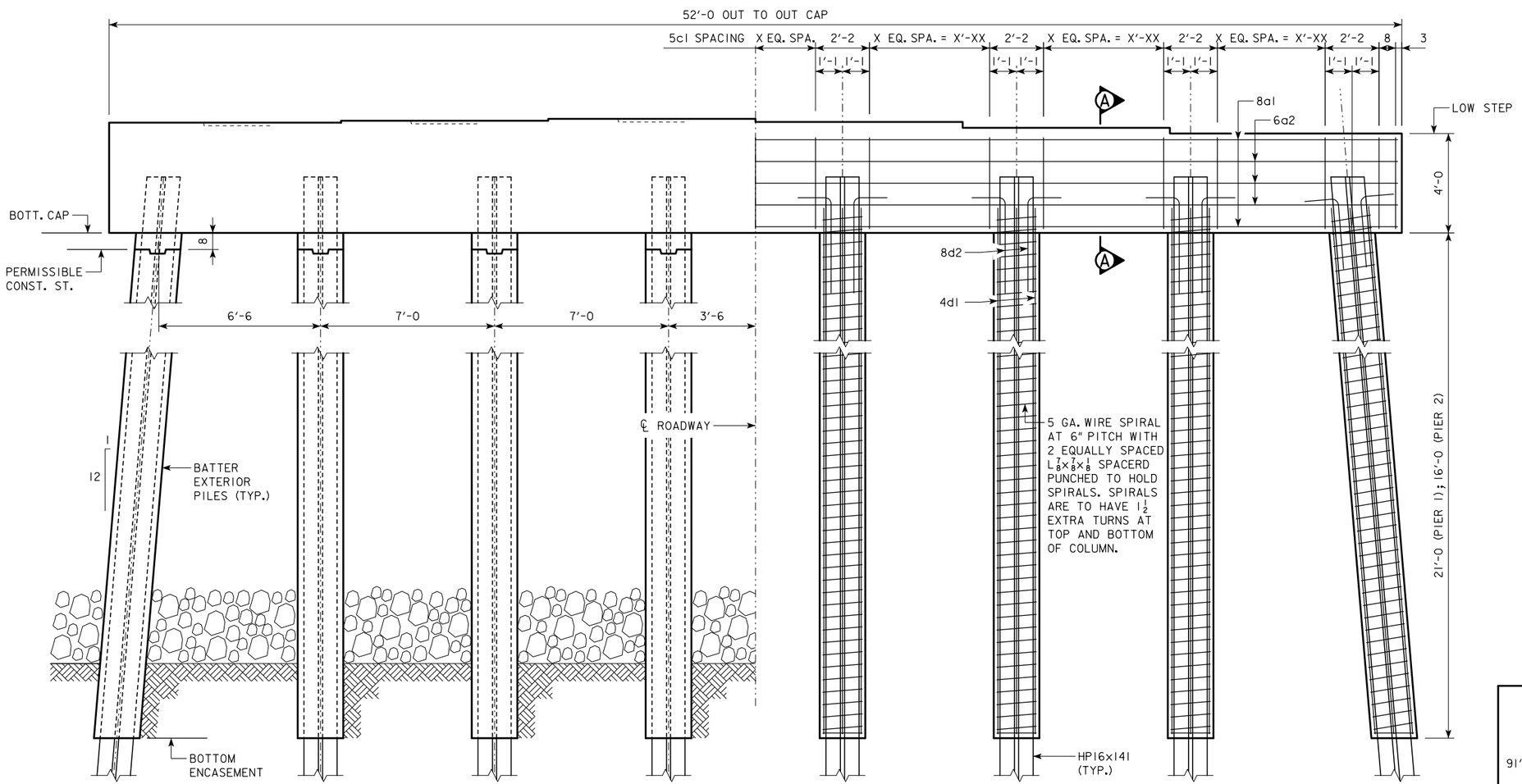

'TYPE A' PIER ELEVATION

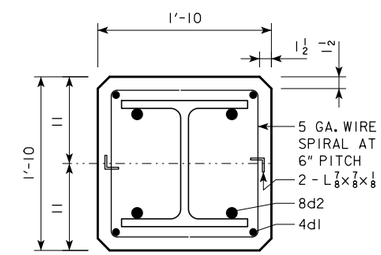

SECTION THROUGH PILE ENCASEMENT

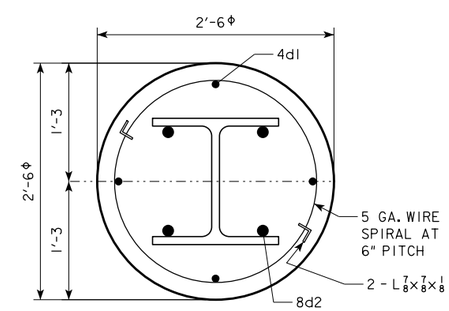

PERMISSIBLE ALTERNATE PILE ENCASEMENT

DESIGN FOR 20° SKEW (R.A.)

234'-0 x 44'-0 ROLLED STEEL BEAM BRIDGE

91'-0 & 51'-0 END SPANS — 92'-0 INTERIOR SPAN

PIER DETAILS - 'TYPE A'

STA. 528+80.00 IA 92 — ?, 2004

POTTAWATTAMIE COUNTY

IOWA DEPARTMENT OF TRANSPORTATION - HIGHWAY DIVISION

DESIGN SHEET NO. 11 OF ? FILE NO. 30846 DESIGN NO. 115

DESIGN TEAM CJC / PES	POTTAWATTAMIE COUNTY	PROJECT NUMBER BRF-092-1(64)--38-78	SHEET NUMBER 12

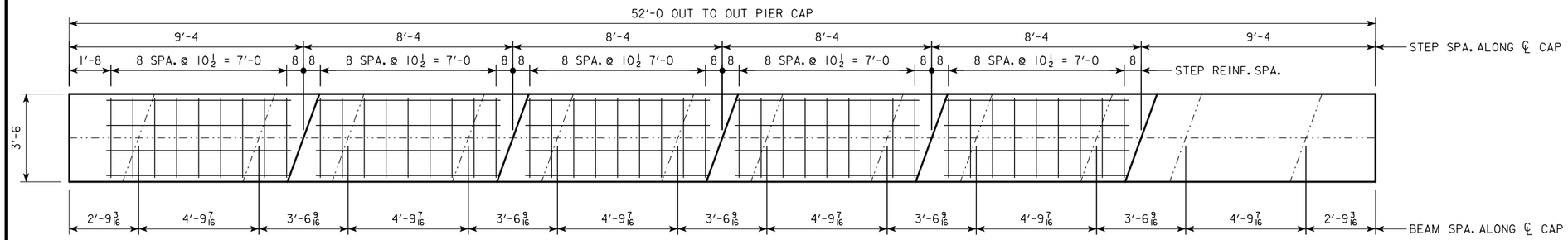

CAP STEP REINFORCING PLAN

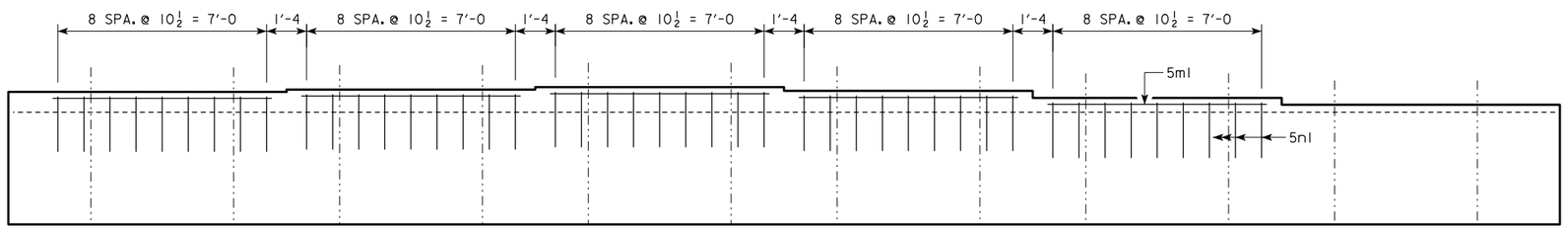

CAP STEP REINFORCING PART SECTION

REINF. STEEL, - 'TYPE A' PIER

	BAR	LOCATION	SHAPE	PIER 1 NO.	PIER 1 LENGTH	PIER 1 WEIGHT	PIER 2 NO.	PIER 2 LENGTH	PIER 2 WEIGHT
EPOXY COATED	8a1	PIER CAP LONGIT., TOP & BOTT.	—	12	41'-8	1335	12	41'-8	1335
	6a2	PIER CAP LONGIT., SIDES	—	6	41'-8	376	6	41'-8	376
	5c1	PIER CAP HOOPS	□		13'-4			13'-4	
	8d2	PILE ANCHOR HOOKS	⌐	32	5'-2	441	32	5'-2	441
	5m1	CAP STEPS LONGIT.	—	20	7'-4	153	20	7'-4	153
	5n1	CAP STEPS TRANSV.	⌐	45	6'-10	321	45	6'-10	321
			TOTAL (LBS.)						
NON COATED	4d1	PILE ENCASEMENT LONGITUDINAL	—	32	21'-11	468	32	16'-11	362
		PILE ENCASEMENT SPIRAL	⬭	8			8		
		SPIRAL SPACERS L 7/8×7/8×1/8 (0.7 LB./FT.)	—	16			16		
			TOTAL (LBS.)						

BENT BAR DETAILS

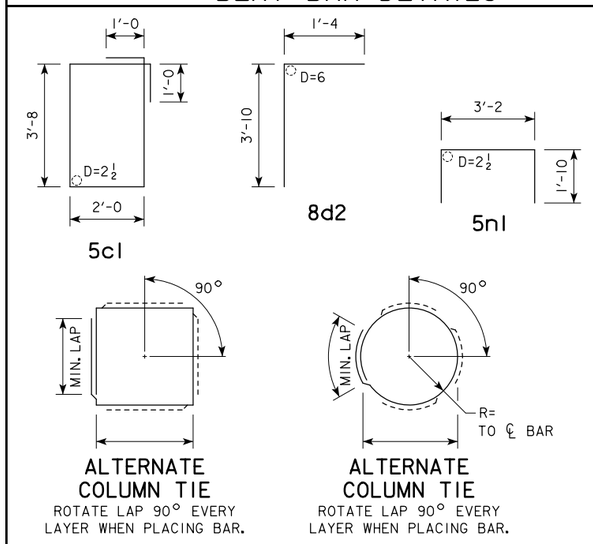

NOTE : ALL DIMENSIONS ARE OUT TO OUT. D = PIN DIAMETER.

*STRUCT. CONC. SUMMARY - 'TYPE A' PIER

LOCATION	PIER 1	PIER 2	TOTAL (CY)
CAP & STEPS	29.4	29.4	58.8
PILE ENCASEMENT	20.9	15.9	36.8
TOTAL (CY)	50.3	45.3	95.6

*EXCAVATION SUMMARY - 'TYPE A' PIER

TYPE	PIER 1	PIER 2	TOTAL (CY)
EXCAVATION, CLASS XX	X.X	X.X	X.X
TOTAL (CY)	XX.X	XX.X	XX.X

* DENOTED QUANTITY ITEMS FOR REINFORCING STEEL, STRUCTURAL CONCRETE AND EXCAVATION ARE INCIDENTAL TO THE LUMP SUM PRICE BID FOR "BRIDGE PIER".

DESIGN FOR 20° SKEW (R.A.)

234'-0 x 44'-0 ROLLED STEEL BEAM BRIDGE

91'-0 & 51'-0 END SPANS — 92'-0 INTERIOR SPAN

PIER DETAILS - 'TYPE A'

STA. 528+80.00 IA 92 — ?, 2004

POTTAWATTAMIE COUNTY

IOWA DEPARTMENT OF TRANSPORTATION - HIGHWAY DIVISION

DESIGN SHEET NO. 12 OF ? FILE NO. 30846 DESIGN NO. 115

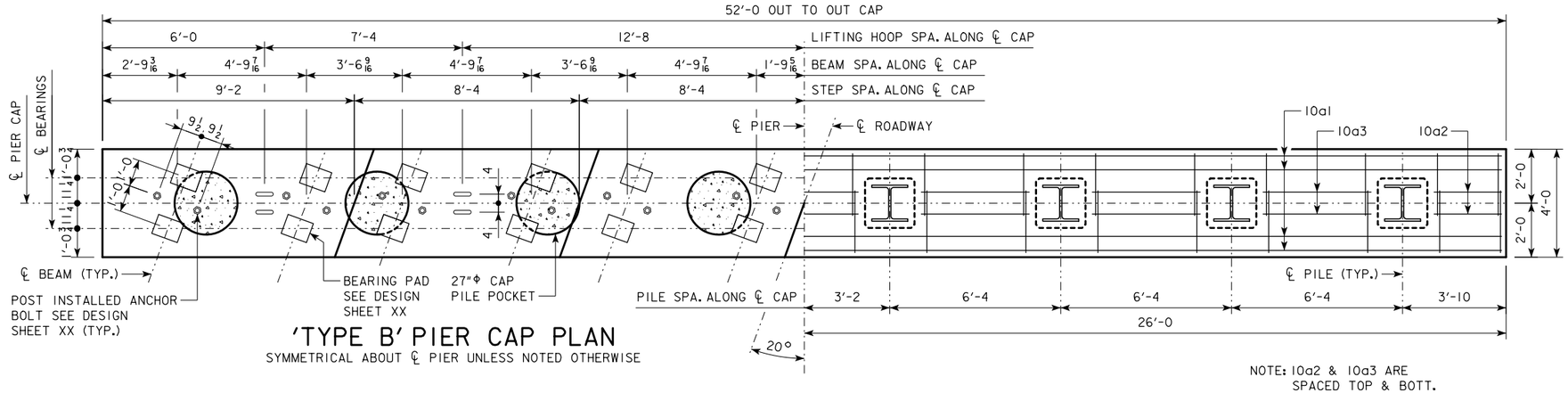

'TYPE B' PIER CAP PLAN

SYMMETRICAL ABOUT ℄ PIER UNLESS NOTED OTHERWISE

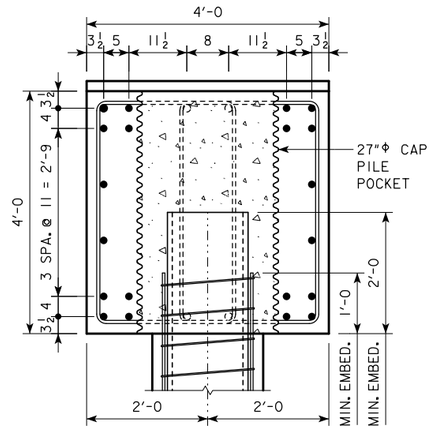

SECTION A-A

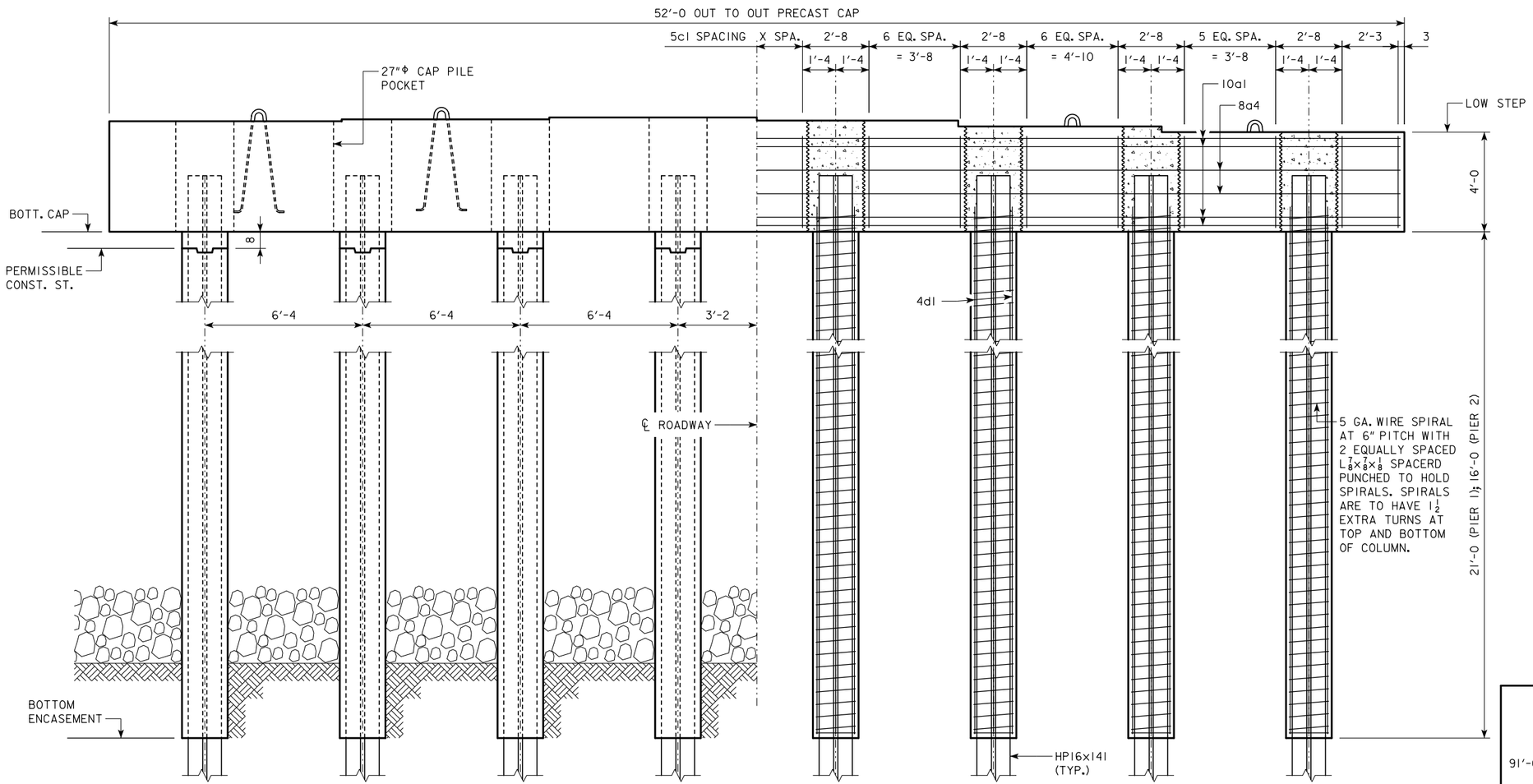

'TYPE B' PIER ELEVATION

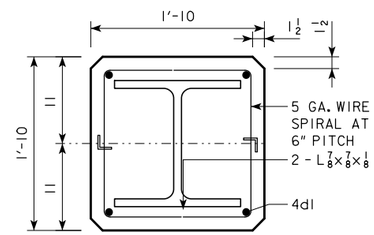

SECTION THROUGH PILE ENCASEMENT

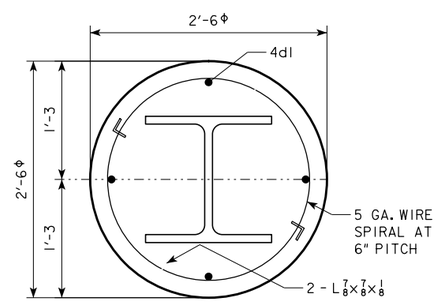

PERMISSIBLE ALTERNATE PILE ENCASEMENT

DESIGN FOR 20° SKEW (R.A.)

234'-0 x 44'-0 ROLLED STEEL BEAM BRIDGE

91'-0 & 51'-0 END SPANS — 92'-0 INTERIOR SPAN

PIER DETAILS - 'TYPE B'

STA. 528+80.00 IA 92 — ?, 2004

POTTAWATTAMIE COUNTY

IOWA DEPARTMENT OF TRANSPORTATION - HIGHWAY DIVISION

DESIGN SHEET NO. 13 OF ? FILE NO. 30846 DESIGN NO. 115

DESIGN TEAM CJC / PES	POTTAWATTAMIE COUNTY	PROJECT NUMBER BRF-092-1(64)--38-78	SHEET NUMBER 14

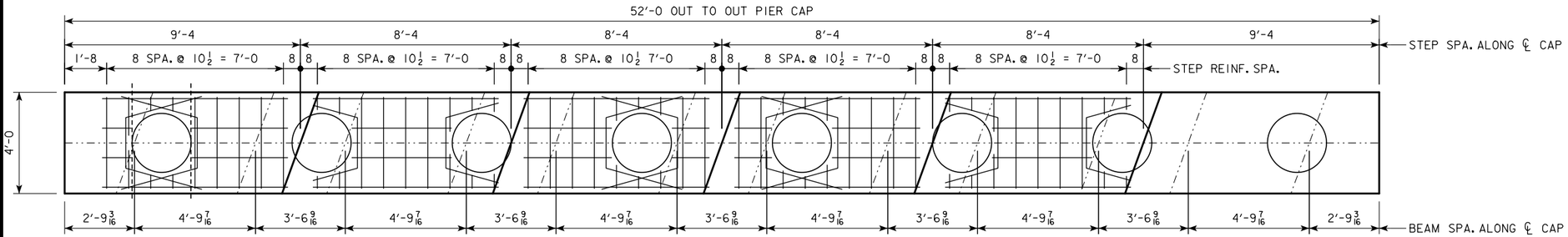

CAP STEP REINFORCING PLAN

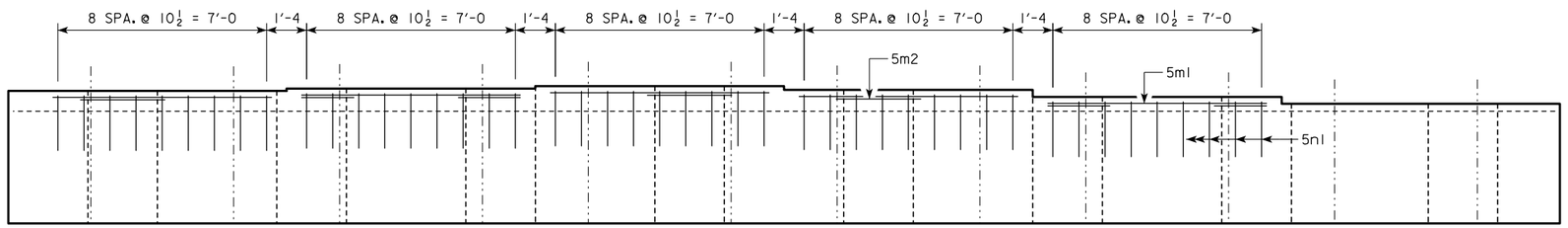

CAP STEP REINFORCING PART SECTION

NOTE: TRIM 5m2 BAR AS NECESSARY TO PROVIDE CLEARANCE.

STRUCT. STEEL - 'TYPE B' PIER

LOCATION	PIER 1	PIER 2	TOTAL (CY)
CAP & STEPS	X.X	X.X	X.X
TOTAL (CY)	XX.X	XX.X	XX.X

REINF. STEEL, - 'TYPE B' PIER

	BAR	LOCATION	SHAPE	PIER 1 NO.	PIER 1 LENGTH	PIER 1 WEIGHT	PIER 2 NO.	PIER 2 LENGTH	PIER 2 WEIGHT
EPOXY COATED	10a1	PIER CAP LONGIT., TOP & BOTT.	—	16	41'-8	2869	16	41'-8	2869
	10a2	PIER CAP LONGIT., TOP & BOTT.	—	8	2'-6	86	8	2'-6	86
	10a3	PIER CAP LONGIT., TOP & BOTT.	—	28	4'-0	482	28	4'-0	482
	6a4	PIER CAP LONGIT., SIDES	—	4	41'-8	250	4	41'-8	250
	5c1	PIER CAP HOOPS	□		13'-4			13'-4	
	5m1	CAP STEPS LONGIT.	—	20	7'-4	153	20	7'-4	153
	5m2	CAP STEPS LONGIT.		10	8'-3	86	10	8'-3	86
	5n1	CAP STEPS TRANSV.	⌐	45	6'-10	321	45	6'-10	321
				TOTAL (LBS.)					
NON COATED									
	4d1	PILE ENCASEMENT LONGITUDINAL	—	32	21'-11	468	32	16'-11	362
		PILE ENCASEMENT SPIRAL	⬭	8			8		
		SPIRAL SPACERS L 7/8×7/8×1/8 (0.7 LB./FT.)	—	16			16		
				TOTAL (LBS.)					

BENT BAR DETAILS

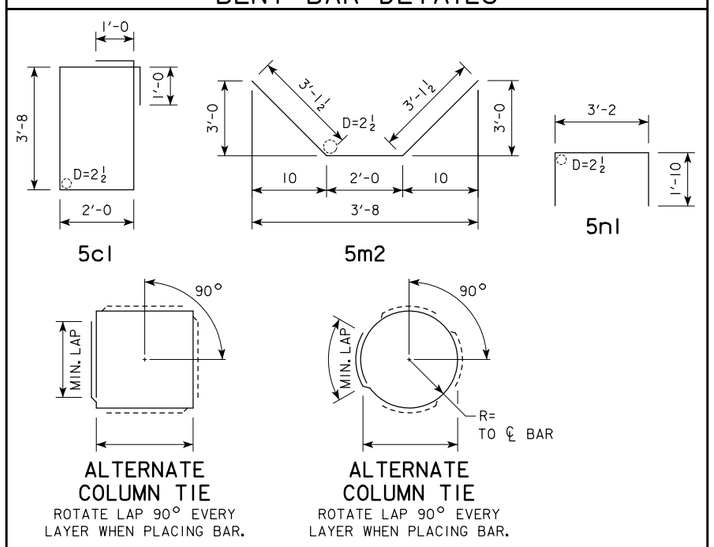

NOTE : ALL DIMENSIONS ARE OUT TO OUT. D = PIN DIAMETER.

*STRUCT. CONC. SUMMARY - 'TYPE B' PIER

LOCATION	PIER 1	PIER 2	TOTAL (CY)
CAP & STEPS	33.6	33.6	67.2
PILE ENCASEMENT	20.9	15.9	36.8
TOTAL (CY)	54.5	49.5	104.0

*EXCAVATION SUMMARY - 'TYPE B' PIER

TYPE	PIER 1	PIER 2	TOTAL (CY)
EXCAVATION, CLASS XX	X.X	X.X	X.X
TOTAL (CY)	XX.X	XX.X	XX.X

* DENOTED QUANTITY ITEMS FOR REINFORCING STEEL, STRUCTURAL CONCRETE AND EXCAVATION ARE INCIDENTAL TO THE LUMP SUM PRICE BID FOR "BRIDGE PIER".

DESIGN FOR 20° SKEW (R.A.)

234'-0 x 44'-0 ROLLED STEEL BEAM BRIDGE

91'-0 & 51'-0 END SPANS — 92'-0 INTERIOR SPAN

PIER DETAILS - 'TYPE B'

STA. 528+80.00 IA 92 — ?, 2004

POTTAWATTAMIE COUNTY

IOWA DEPARTMENT OF TRANSPORTATION - HIGHWAY DIVISION

DESIGN SHEET NO. 14 OF ? FILE NO. 30846 DESIGN NO. 115

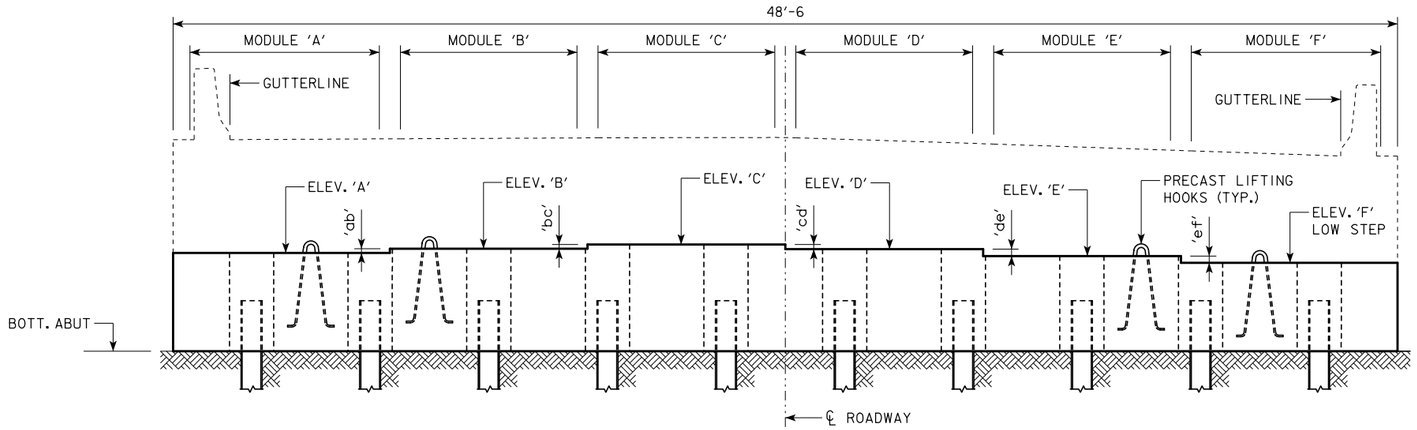

REAR ELEVATION - TYPE 'A' ABUTMENT

(PRECAST OR CAST-IN-PLACE FOOTING; CAST-IN-PLACE BACKWALL)
(WEST ABUTMENT SHOWN; EAST ABUTMENT SIMILAR)

'TYPE A'					
BEAM SEAT ELEV.			CAP STEP HEIGHT		
LOCATION	PIER 1	PIER 2	STEP	PIER 1	PIER 2
ELEV. A	XXX.xx	XXX.xx	'ab'	XXX.xx	XXX.xx
ELEV. B	XXX.xx	XXX.xx	'bc'	XXX.xx	XXX.xx
ELEV. C	XXX.xx	XXX.xx	'cd'	XXX.xx	XXX.xx
ELEV. D	XXX.xx	XXX.xx	'de'	XXX.xx	XXX.xx
ELEV. E	XXX.xx	XXX.xx	'ef'	XXX.xx	XXX.xx
ELEV. F	XXX.xx	XXX.xx			

ABUTMENT NOTES:

BRIDGE PIERS FOR THIS PROJECT SHALL CONSIST OF 'TYPE A' OR 'TYPE B' PIERS AS DETAILED IN THESE PLANS. THE SELECTED PIER TYPE SHALL BE THE SAME FOR PIER 1 AND PIER 2.

PILE DESIGN AND CONSTRUCTION CONTROL REQUIREMENTS SHALL BE THE SAME FOR 'TYPE A' AND 'TYPE B' PIER PILES. REFER TO PILE NOTES AND PIER PILE TABLES.

CONSTRUCTION OF PILE ENCASEMENT(S) SHALL BE PERMITTED AFTER PLACEMENT OF THE PIER CAPS. THE CONTRACTOR SHALL BE REQUIRED TO SUBMIT A TEMPORARY SUPPORT PLAN FOR PIER CAPS THAT ARE CONSTRUCTED PRIOR TO FULL MATURITY OF THE PILE ENCASEMENT CONCRETE, SUBJECT TO REVIEW AND APPROVAL BY THE ENGINEER. FIELD WELDING OF BRACKETS TO THE PILES SHALL BE DISCOURAGED AS A MEANS OF TEMPORARY PIER CAP SUPPORT.

MINIMUM CLEAR DISTANCE FROM FACE OF CONCRETE TO NEAR REINFORCING BAR IS TO BE 2 INCHES UNLESS OTHERWISE NOTED OR SHOWN.

REINFORCING IS TO BE SECURELY WIRED IN PLACE BEFORE CONCRETE IS POURED.

THE LUMP SUM PRICE BID FOR "BRIDGE PIER" SHALL INCLUDE ALL COSTS OF MATERIALS AND LABOR FOR CONSTRUCTION OF PIER CAPS AND PILE ENCASEMENT, INCLUDING EXCAVATION, CAST-IN-PLACE AND PRECAST STRUCTURAL CONCRETE, PORTLAND CEMENT GROUT, REINFORCING STEEL, STRUCTURAL STEEL, AND TEMPORARY SUPPORTS, AS REQUIRED.

MATERIALS AND LABOR FOR PIER PILES SHALL BE INCLUDED IN THE PRICE BID FOR "PILES, STEEL, HP 16 X ___".

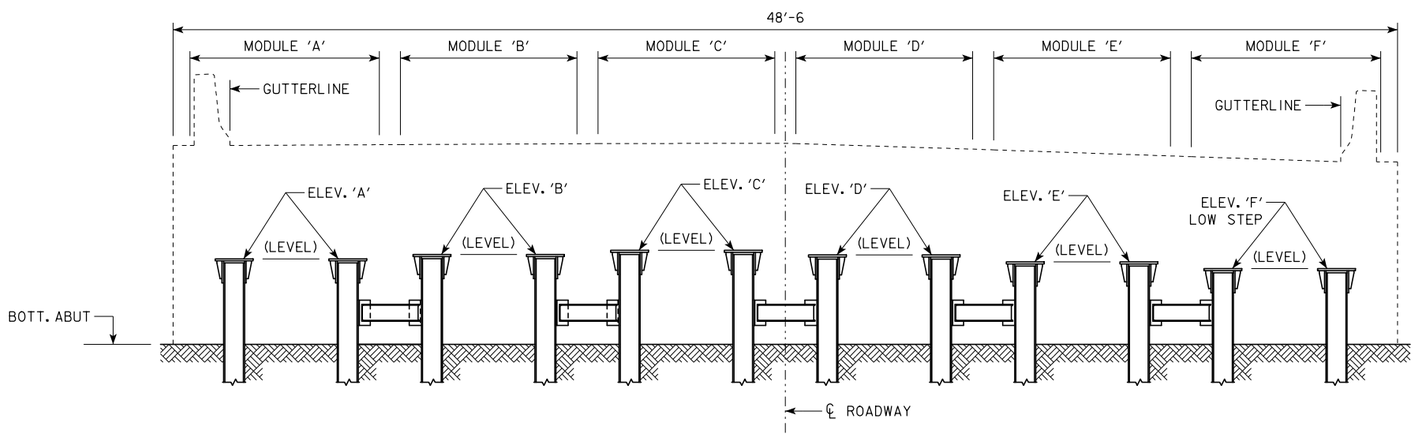

REAR ELEVATION - TYPE 'B' ABUTMENT

(CAST-IN-PLACE INTEGRAL ABUTMENT BACKWALL / DIAPHRAGM)
(WEST ABUTMENT SHOWN; EAST ABUTMENT SIMILAR)

'TYPE B'		
BEAM SEAT ELEV.		
LOCATION	PIER 1	PIER 2
ELEV. A	XXX.xx	XXX.xx
ELEV. B	XXX.xx	XXX.xx
ELEV. C	XXX.xx	XXX.xx
ELEV. D	XXX.xx	XXX.xx
ELEV. E	XXX.xx	XXX.xx
ELEV. F	XXX.xx	XXX.xx

EST. QUANTITIES - TWO BRIDGE ABUT.				
ITEM	UNIT	PIER 1	PIER 2	TOTAL
BRIDGE ABUTMENT	LS	1.0	1.0	2.0
PILES, STEEL, HP 10 x 57	LF	XXX	XXX	XXX

DESIGN FOR 20° SKEW (R.A.)

234'-0 x 44'-0 ROLLED STEEL BEAM BRIDGE

91'-0 & 51'-0 END SPANS 92'-0 INTERIOR SPAN

ABUTMENT DETAILS - GENERAL

STA. 528+80.00 IA 92 ?, 2004

POTTAWATTAMIE COUNTY

IOWA DEPARTMENT OF TRANSPORTATION - HIGHWAY DIVISION

DESIGN SHEET NO. 15 OF ? FILE NO. 30846 DESIGN NO. 115

EAST ABUTMENT PRECAST FOOTING PLAN

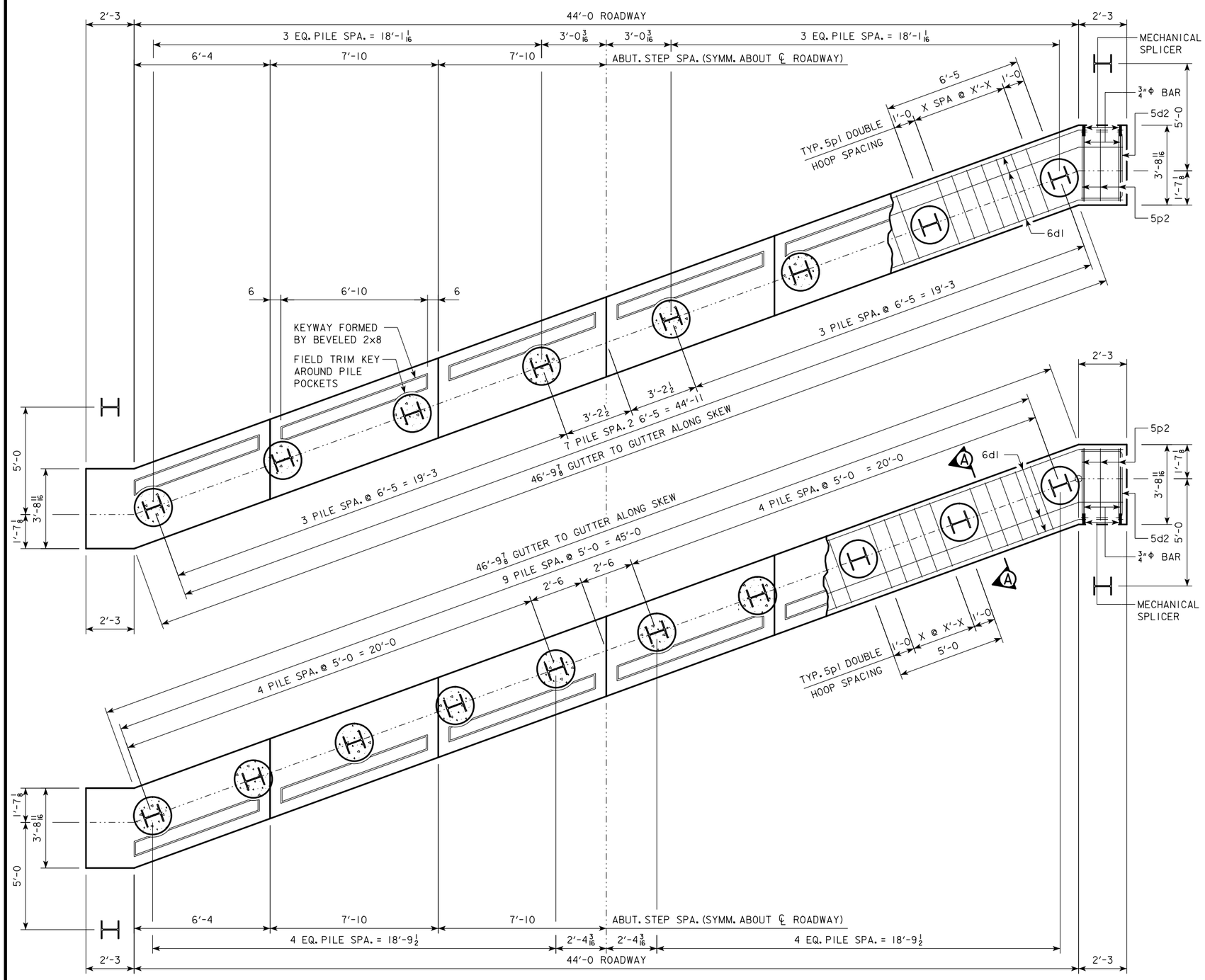

WEST ABUTMENT PRECAST FOOTING PLAN

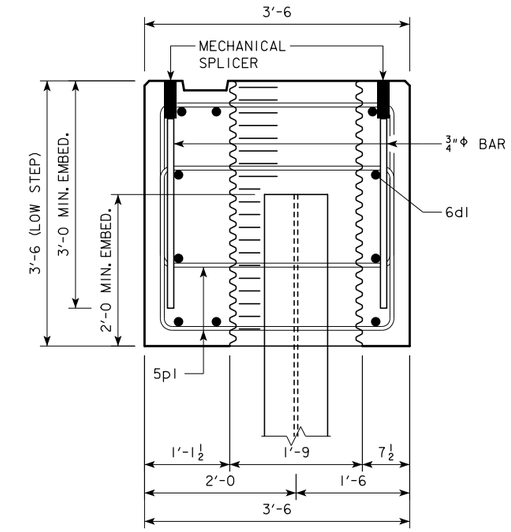

PART SECTION A-A

PILE NOTES:

THE CONTRACT LENGTH OF THE ABUTMENT PILES IS BASED ON THE DESIGN PARAMETERS LISTED IN THE "ABUTMENT PILE DESIGN (LRFD)" TABLE.

THE REQUIRED NOMINAL AXIAL BEARING RESISTANCE FOR ABUTMENT PILES AT END OF DRIVE (EOD) IS BASED ON THE PARAMETERS LISTED IN THE "ABUTMENT PILE CONST. CONTROL (LRFD)" TABLE.

THE PILE CONTRACT LENGTH SHALL BE DRIVEN AS PER PLAN OR UNTIL PILES REACH REFUSAL. CONSTRUCTION CONTROL REQUIRES A WEAP ANALYSIS WITH BEARING GRAPH.

ABUTMENT PILE DESIGN (LRFD)

DESIGN PARAMETER	W. ABUT.	E. ABUT.
SOIL CLASSIFICATION	XXXX	XXXX
GEOTECH. RESIST. FACTOR, "PHI" - SOIL	XXXX	XXXX
GEOTECH. RESIST. FACTOR, "PHI" - ROCK	XXXX	XXXX
TOTAL FACTORED AXIAL LOAD, "PU" (KIPS)	XXXX	XXXX
NO. PILES	12	12
PILE TYPE (STEEL HP-SECTION)	HP 10 X 57	HP 10 X 57
CONTRACT LENGTH (FT)	XXXX	XXXX

ABUTMENT PILE CONST. CONTROL (LRFD)

DESIGN PARAMETER	S. ABUT.	N. ABUT.
SOIL CLASSIFICATION	XXXX	XXXX
GEOTECH. RESIST. FACTOR, "PHI" - SOIL	XXXX	XXXX
GEOTECH. RESIST. FACTOR, "PHI" - ROCK	XXXX	XXXX
NOMINAL AXIAL BEARING RESISTANCE (TONS)	XXXX	XXXX

DESIGN FOR 20° SKEW (R.A.)

234'-0 x 44'-0 ROLLED STEEL BEAM BRIDGE

91'-0 & 51'-0 END SPANS — 92'-0 INTERIOR SPAN

ABUTMENT DETAILS - 'TYPE A'

STA. 528+80.00 IA 92 — ?, 2004

POTTAWATTAMIE COUNTY

IOWA DEPARTMENT OF TRANSPORTATION - HIGHWAY DIVISION

DESIGN SHEET NO. 16 OF ? FILE NO. 30846 DESIGN NO. 115

BENCH MARK NO. 501 STA. 529+82.22, -20.2127 FND X NE CORNER BRIDGE, ELEV. 1103.648

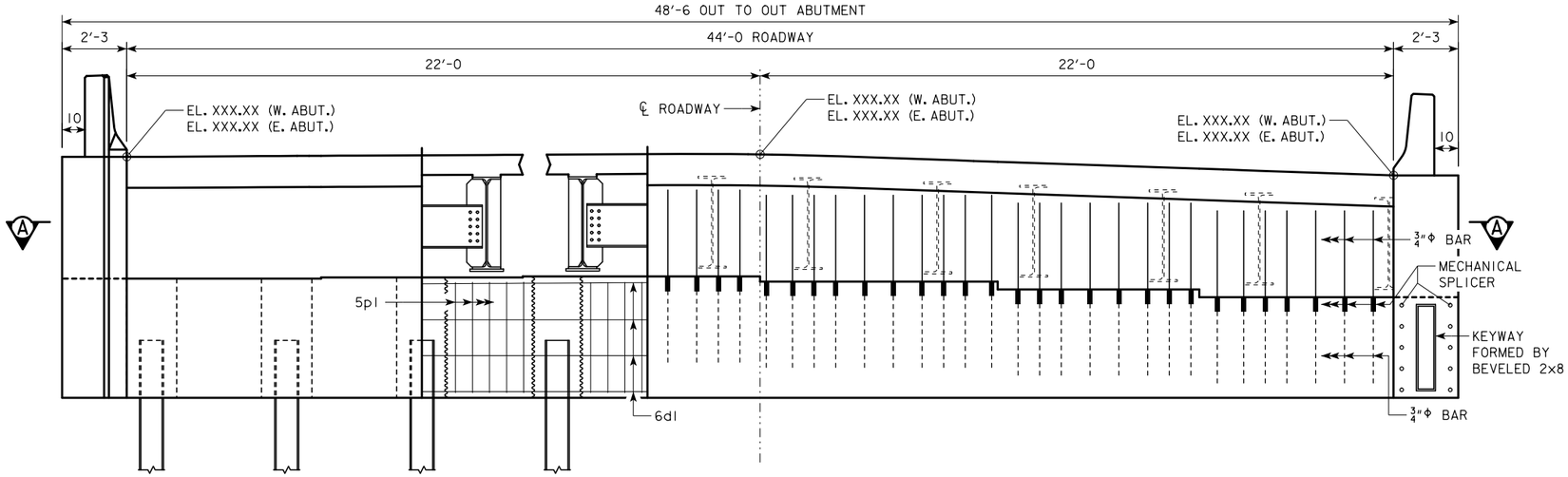

REAR ELEVATION

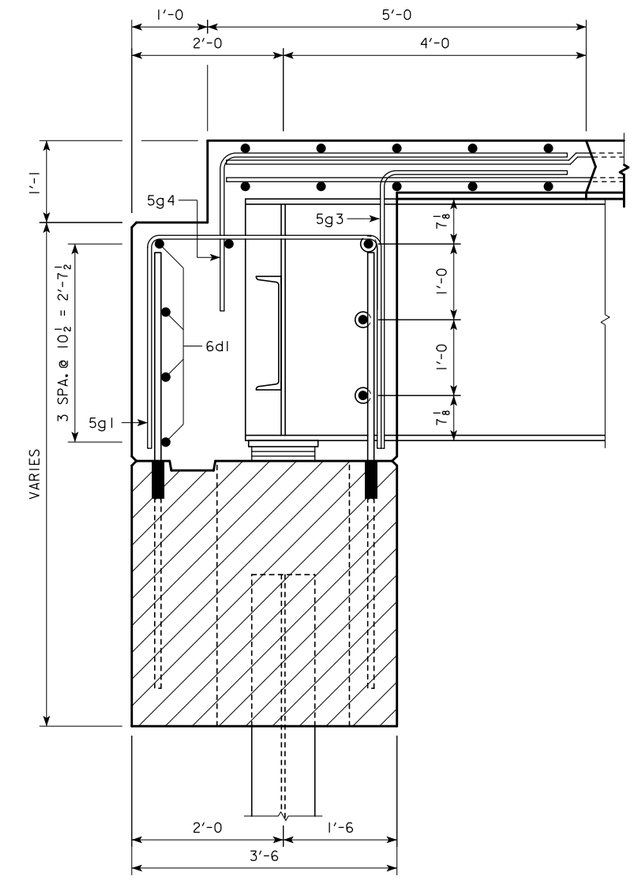

PART SECTION B-B

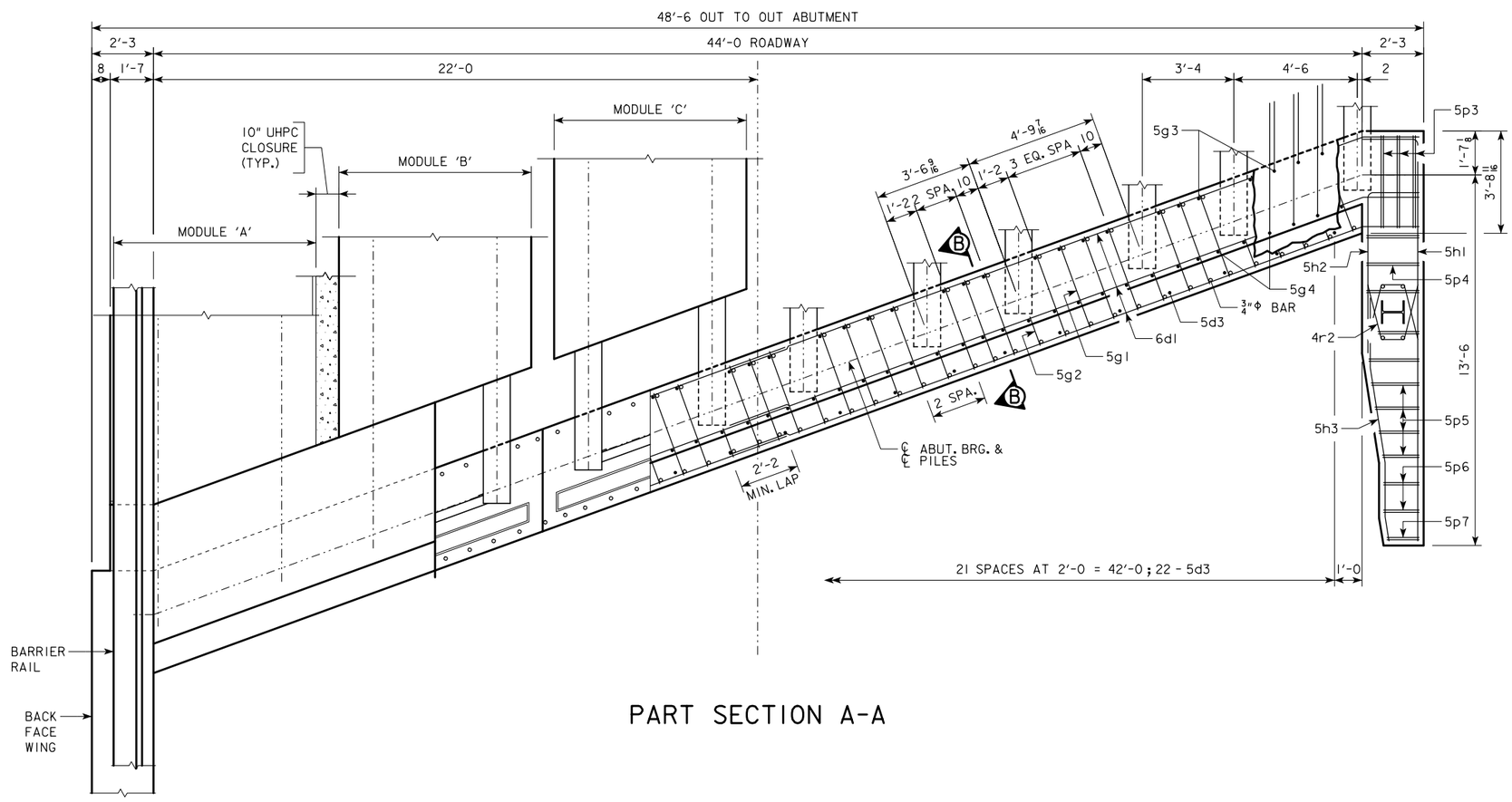

PART SECTION A-A

DESIGN FOR 20° SKEW (R.A.)

234'-0 x 44'-0 ROLLED STEEL BEAM BRIDGE

91'-0 & 51'-0 END SPANS — 92'-0 INTERIOR SPAN

ABUTMENT DETAILS - 'TYPE A'

STA. 528+80.00 IA 92 — ?, 2004

POTTAWATTAMIE COUNTY

IOWA DEPARTMENT OF TRANSPORTATION - HIGHWAY DIVISION

DESIGN SHEET NO. 17 OF ? FILE NO. 30846 DESIGN NO. 115

DESIGN TEAM CJC / PES	POTTAWATTAMIE COUNTY	PROJECT NUMBER BRF-092-1(64)--38-78	SHEET NUMBER 18

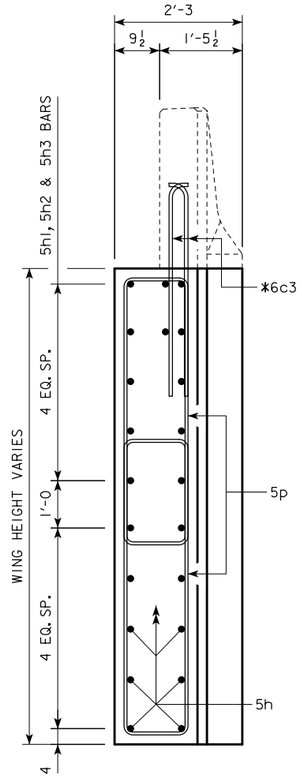

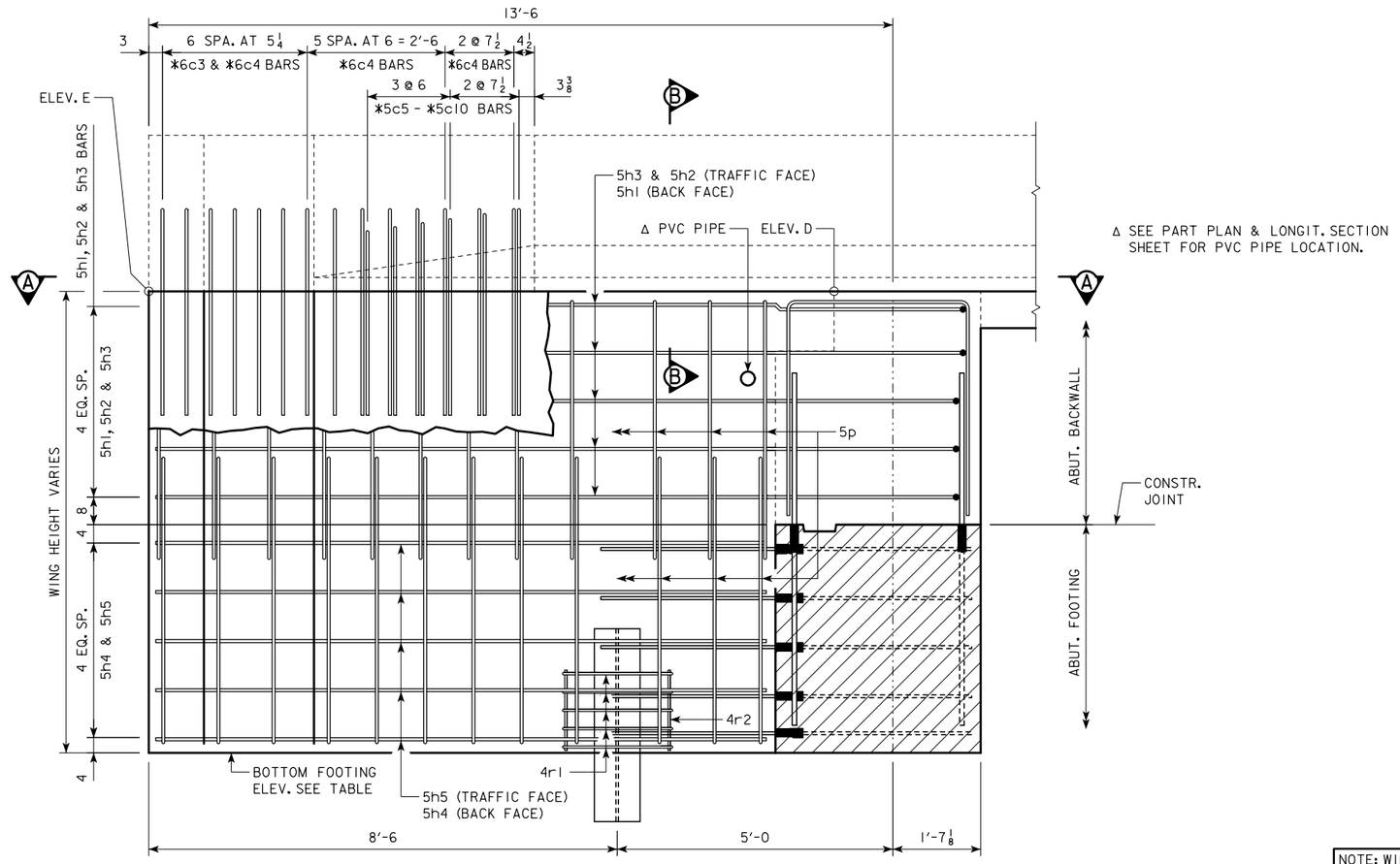

ABUTMENT WING - ELEVATION VIEW

NOTE: WING CONCRETE AND REINFORCING STEEL IS INCLUDED WITH ABUTMENT QUANTITIES

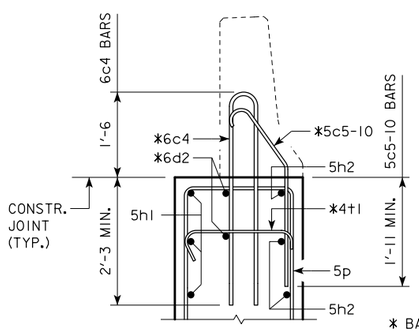

SECTION B-B

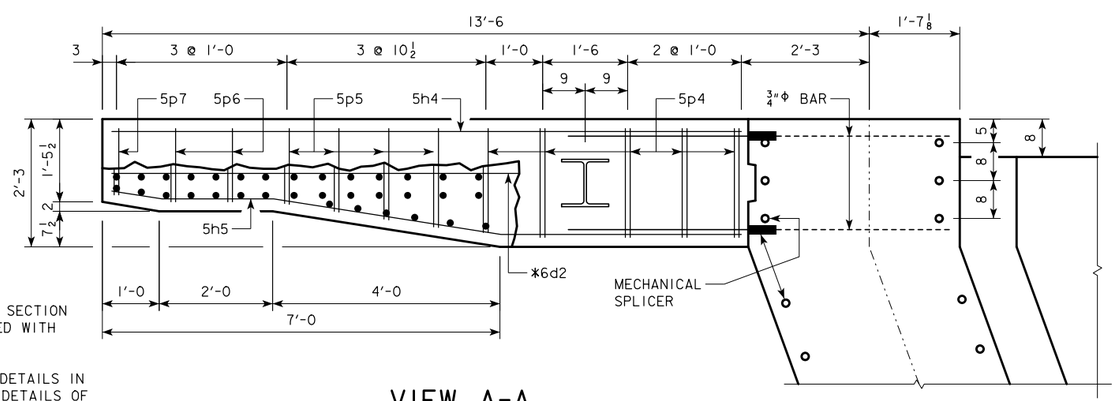

VIEW A-A

* BARRIER RAIL END SECTION BARS TO BE PLACED WITH ABUTMENT WING.

SEE END SECTION DETAILS IN THESE PLANS FOR DETAILS OF BARRIER RAIL END SECTION. REINFORCING BARS 6c3, 6c4, 5c5-10, 6d2 & 4+1 ARE INCLUDED IN THE SUPERSTRUCTURE QUANTITIES.

TABLE OF WING ELEVATIONS

	BOTT. FOOT.	ELEV. 'D'	ELEV. 'E'
NORTHWEST WING	1100.17	1108.49	1109.02
SOUTHWEST WING	1100.17	1107.84	1108.34
NORTHEAST WING	1094.88	1102.62	1102.53
SOUTHEAST WING	1094.88	1102.51	1102.45

DESIGN FOR 20° SKEW (R.A.)

234'-0 x 44'-0 ROLLED STEEL BEAM BRIDGE

91'-0 & 51'-0 END SPANS — 92'-0 INTERIOR SPAN

ABUTMENT DETAILS - 'TYPE A'

STA. 528+80.00 IA 92 — ?, 2004

POTTAWATTAMIE COUNTY

IOWA DEPARTMENT OF TRANSPORTATION - HIGHWAY DIVISION

DESIGN SHEET NO. 18 OF ? FILE NO. 30846 DESIGN NO. 115

BENT BAR DETAILS

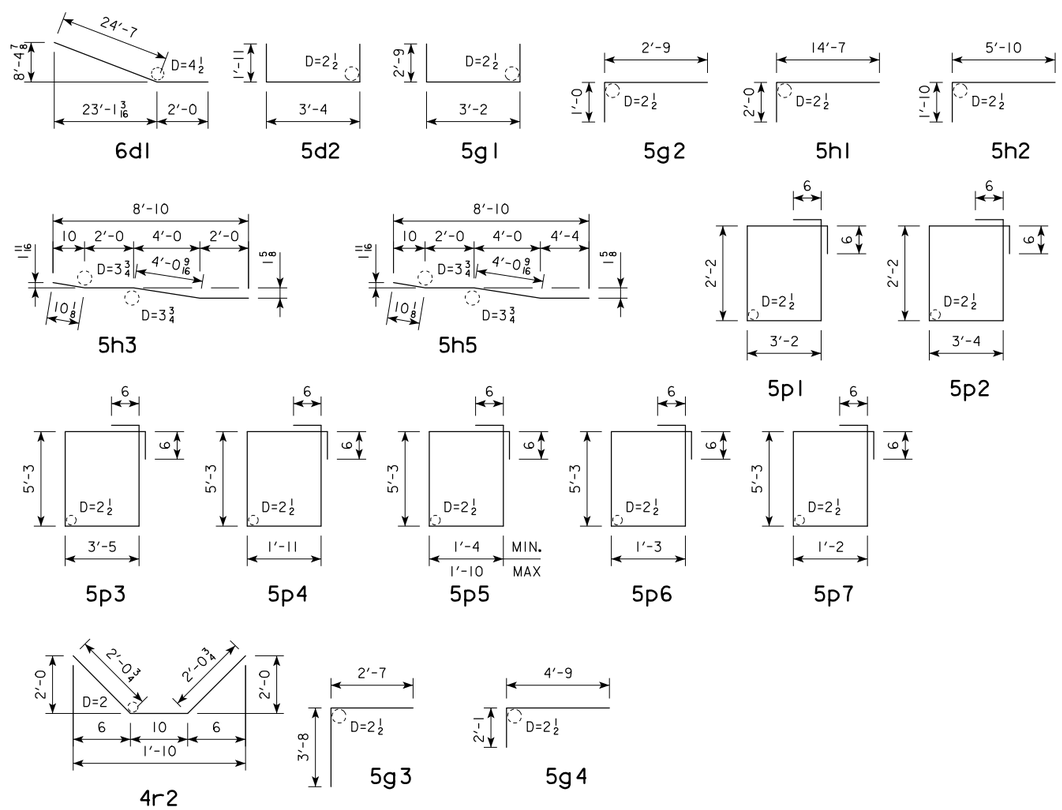

NOTE: ALL DIMENSIONS ARE OUT TO OUT. D= PIN DIAMETER.

REINF. STEEL, EPOXY COATED - ONE ABUT.

BAR	LOCATION	SHAPE	NO.	LENGTH	WEIGHT
6d1	ABUTMENT LONGITUDINAL		36	26'-7	1437
5d2	ABUTMENT FOOTING ENDS		8	7'-2	60
5g1	ABUTMENT BACKWALL HOOP		35	8'-8	316
5g2	ABUTMENT BACK FACE HOOK BEHIND BEAMS		11	3'-9	43
5h1	ABUTMENT WING LONGITUDINAL BACK FACE		10	16'-7	173
5h2	ABUTMENT WING LONGITUDINAL TRAFFIC FACE		10	7'-8	80
5h3	ABUTMENT WING LONGITUDINAL TRAFFIC FACE		10	8'-11	93
5h4	ABUTMENT WING LONGITUDINAL BACK FACE		10	11'-1	116
5h5	ABUTMENT WING LONGITUDINAL TRAFFIC FACE		10	11'-3	117
5p1	ABUTMENT FOOTING HOOPS		45	11'-8	548
5p2	ABUTMENT FOOTING HOOPS AT ENDS		12	12'-0	150
5p3	ABUTMENT END HOOPS		12	18'-8	234
5p4	ABUTMENT WING HOOPS		20	15'-4	320
5p5	ABUTMENT WING HOOPS		16	VARIES	246
5p6	ABUTMENT WING HOOPS		8	14'-0	117
5p7	ABUTMENT WING HOOPS		4	13'-10	58
			TOTAL (LBS.)		4,107

REINF. STEEL, NON-COATED - ONE ABUT.

BAR	LOCATION	SHAPE	NO.	LENGTH	WEIGHT
4r1	WING PILE REINFORCING		20	5'-0	67
4r2	PILE REINFORCING VERTICAL TIE		8	1'-9	9
			TOTAL (LBS.)		76

REINF. STEEL, STAINLESS STEEL - ONE ABUT.

BAR	LOCATION	SHAPE	NO.	LENGTH	WEIGHT
5d3	APPROACH TIE DOWEL		22	3'-6	80
5g3	ABUTMENT FRONT FACE HOOK		39	6'-3	254
5g4	PAVING NOTCH DIAGONAL		50	6'-10	356
DECK CLOSURE - SEE DESIGN SHT. NO. XX					963
				TOTAL (LBS.)	1,653

STRUCT. CONC. (MISC.) - TWO ABUTMENTS

LOCATION	WEST ABUT.	EAST ABUT.	TOTAL (CY)
ABUTMENT FOOTING	26.6	24.8	51.4
ABUTMENT BACKWALL & WINGS	42.5	41.5	84.0
TOTAL (CY)	69.1	66.3	135.4

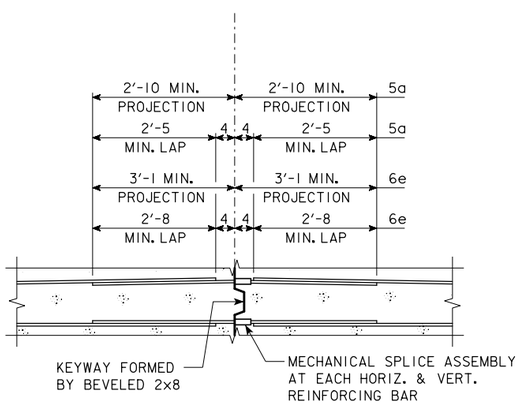

MECHANICAL SPLICE DETAIL

MECHANICAL SPLICE ASSEMBLIES:

THE 5a1 AND 5a2 ABUTMENT BACKWALL BARS AND 6e6, 6e7 & 6e8 ABUTMENT DIAPHRAGM BARS SHALL BE SPLICED AT THE LOCATIONS SHOWN USING MECHANICAL SPLICE ASSEMBLIES. MECHANICAL SPLICE ASSEMBLIES CONSIST OF MECHANICAL SPLICERS AND REINFORCING SPLICE BARS AS REQUIRED TO FACILITATE THE USE OF THE MECHANICAL SPLICER. THE MECHANICAL SPLICE ASSEMBLY USED SHALL MEET THE REQUIREMENTS OF MATERIALS IM 451 APPENDIX E. REINFORCING SPLICE BARS SHALL BE A MINIMUM OF $\frac{3}{4}$ INCH DIAMETER.

ALL MECHANICAL SPLICE ASSEMBLIES TO BE USED SHALL BE EPOXY COATED.

THE COST OF ALL SPLICE ASSEMBLIES IS TO BE INCLUDED IN THE PRICE BID FOR "REINFORCING STEEL EPOXY COATED" AND NO SEPARATE PAYMENT WILL BE MADE. THE WEIGHT OF MECHANICAL SPLICE ASSEMBLIES IS NOT INCLUDED IN THE QUANTITY SHOWN FOR "REINFORCING STEEL EPOXY COATED". A TOTAL OF 6 EPOXY COATED SPLICE ASSEMBLIES WILL BE REQUIRED.

EST. QUANTITIES - TWO ABUTMENTS

ITEM	UNIT	WEST ABUT.	EAST ABUT.	TOTAL
EXCAVATION, CLASS 20	CY	XX.X	XX.X	XX.X
STRUCTURAL CONCRETE (MISC.)	CY	XX.X	XX.X	XX.X
REINF. STEEL, EPOXY COATED	LB	XX.X	XX.X	XX.X
REINF. STEEL, STAINLESS STEEL	LB	XX.X	XX.X	XX.X
STRUCTURAL STEEL	LB	XX.X	XX.X	XX.X
PILES, STEEL, HP 10 X 57	LF	XX.X	XX.X	XX.X
PREBORED HOLES	LF	XX.X	XX.X	XX.X

DESIGN FOR 20° SKEW (R.A.)

234'-0 x 44'-0 ROLLED STEEL BEAM BRIDGE

91'-0 & 51'-0 END SPANS 92'-0 INTERIOR SPAN

ABUTMENT DETAILS - 'TYPE A'

STA. 528+80.00 IA 92 ?, 2004

POTTAWATTAMIE COUNTY

IOWA DEPARTMENT OF TRANSPORTATION - HIGHWAY DIVISION

DESIGN SHEET NO. 19 OF ? FILE NO. 30846 DESIGN NO. 115

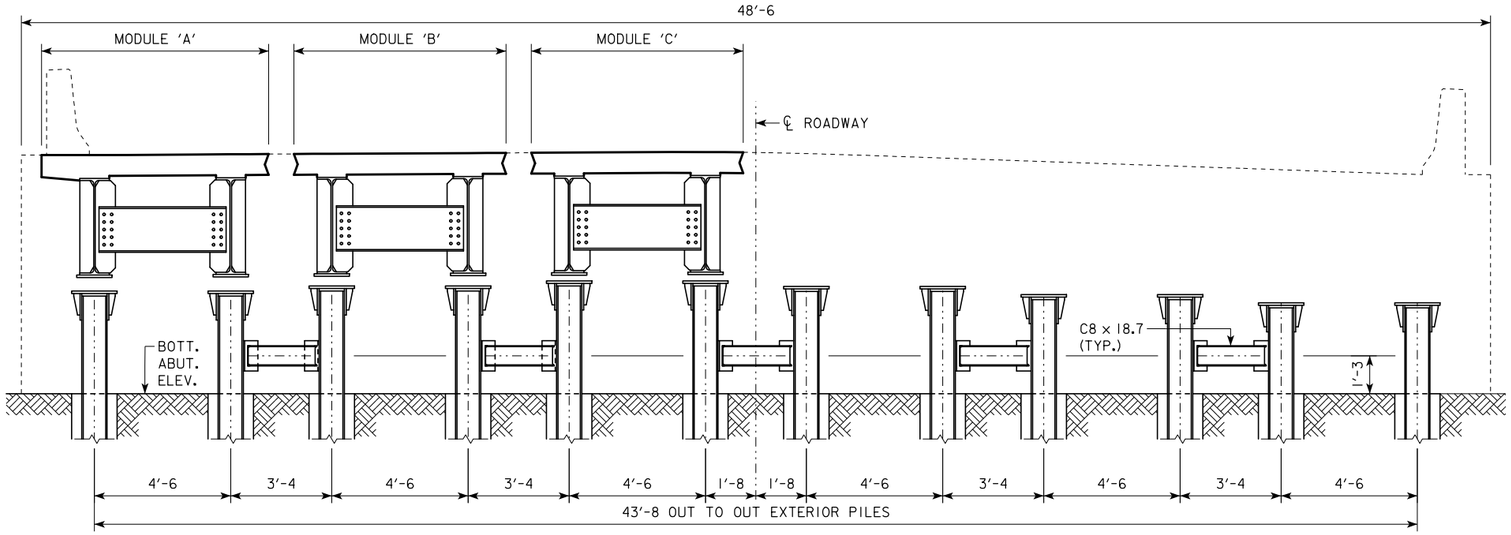

ABUTMENT PILE REAR ELEVATION

(WEST ABUTMENT SHOWN; EAST ABUTMENT SIMILAR)
(WING PILES NOT SHOWN)

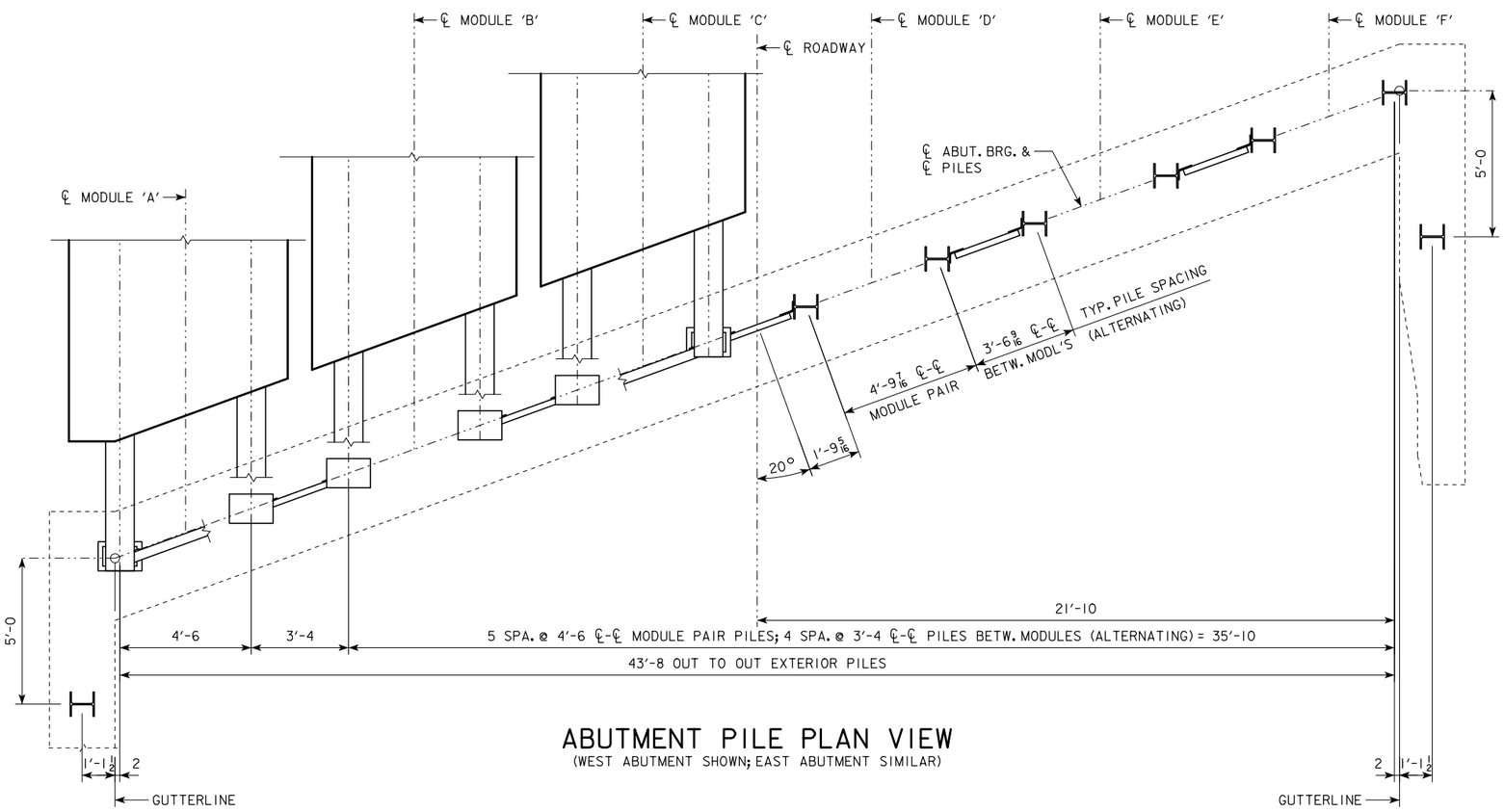

ABUTMENT PILE PLAN VIEW

(WEST ABUTMENT SHOWN; EAST ABUTMENT SIMILAR)

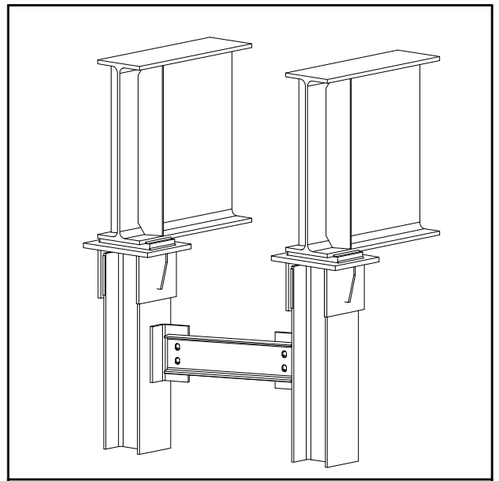

BEAM SEAT ISOMETRIC DETAIL

PILE NOTES:

THE CONTRACT LENGTH OF THE ABUTMENT PILES IS BASED ON THE DESIGN PARAMETERS LISTED IN THE "ABUTMENT PILE DESIGN (LRFD)" TABLE.

THE REQUIRED NOMINAL AXIAL BEARING RESISTANCE FOR ABUTMENT PILES AT END OF DRIVE (EOD) IS BASED ON THE PARAMETERS LISTED IN THE "ABUTMENT PILE CONST. CONTROL (LRFD)" TABLE.

THE PILE CONTRACT LENGTH SHALL BE DRIVEN AS PER PLAN OR UNTIL PILES REACH REFUSAL. CONSTRUCTION CONTROL REQUIRES A WEAP ANALYSIS WITH BEARING GRAPH.

ABUTMENT PILE DESIGN (LRFD)

DESIGN PARAMETER	W. ABUT.	E. ABUT.
SOIL CLASSIFICATION	XXXX	XXXX
GEOTECH. RESIST. FACTOR, "PHI" - SOIL	XXXX	XXXX
GEOTECH. RESIST. FACTOR, "PHI" - ROCK	XXXX	XXXX
TOTAL FACTORED AXIAL LOAD, "PU" (KIPS)	XXXX	XXXX
NO. PILES	14	14
PILE TYPE (STEEL HP-SECTION)	HP 10 X 57	HP 10 X 57
CONTRACT LENGTH (FT)	XXXX	XXXX

ABUTMENT PILE CONST. CONTROL (LRFD)

DESIGN PARAMETER	S. ABUT.	N. ABUT.
SOIL CLASSIFICATION	XXXX	XXXX
GEOTECH. RESIST. FACTOR, "PHI" - SOIL	XXXX	XXXX
GEOTECH. RESIST. FACTOR, "PHI" - ROCK	XXXX	XXXX
NOMINAL AXIAL BEARING RESISTANCE (TONS)	XXXX	XXXX

DESIGN FOR 20° SKEW (R.A.)

234'-0 x 44'-0 ROLLED STEEL BEAM BRIDGE

91'-0 & 51'-0 END SPANS 92'-0 INTERIOR SPAN

ABUTMENT DETAILS - 'TYPE B'

STA. 528+80.00 IA 92 ?, 2004

POTTAWATTAMIE COUNTY

IOWA DEPARTMENT OF TRANSPORTATION - HIGHWAY DIVISION

DESIGN SHEET NO. 20 OF ? FILE NO. 30846 DESIGN NO. 115

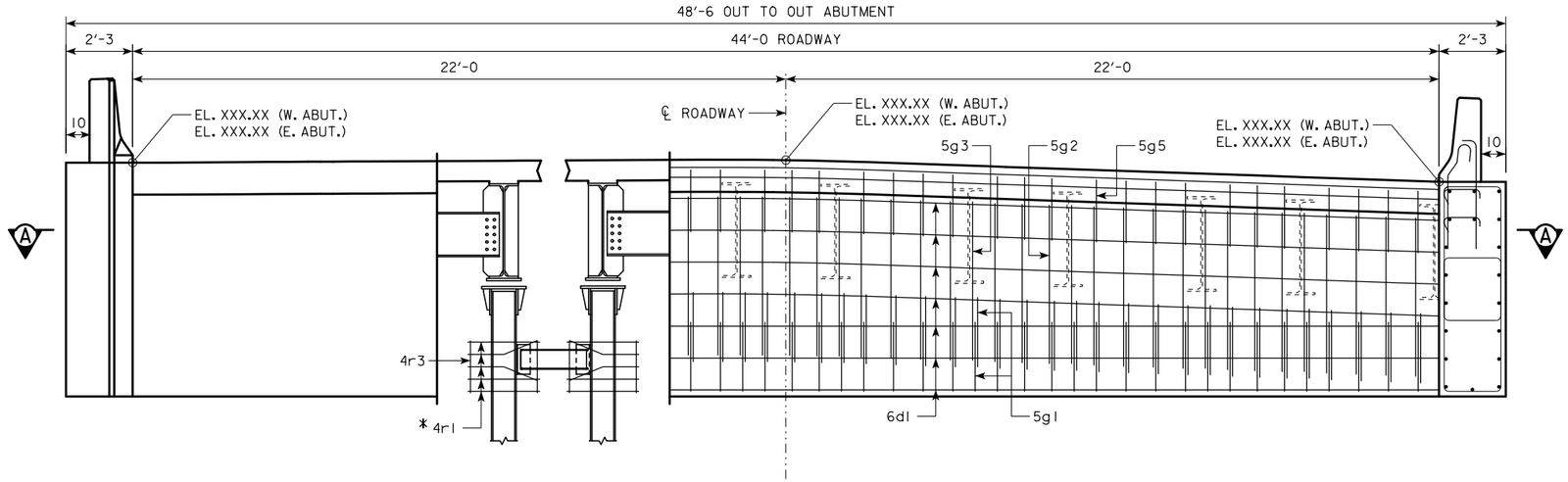

* FIELD BEND TO CLEAR PILE BRACING.

REAR ELEVATION

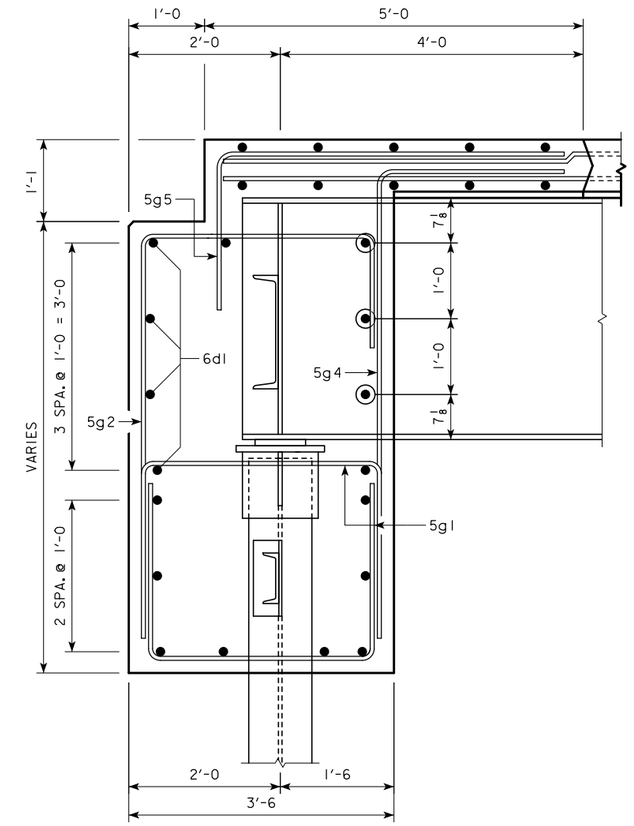

PART SECTION B-B

(PILE REINF. (4r BARS) NOT SHOWN FOR CLARITY)

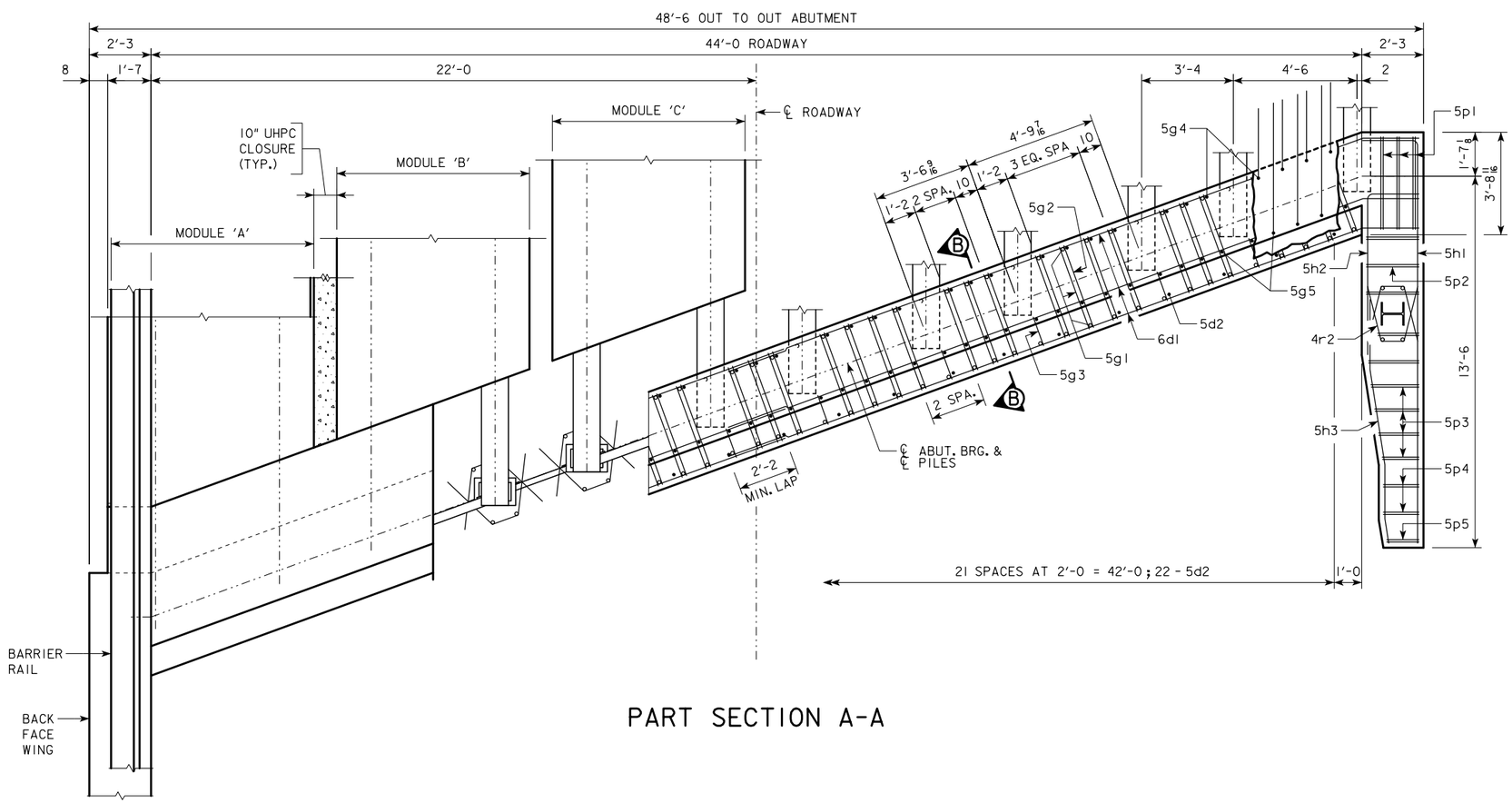

PART SECTION A-A

DESIGN FOR 20° SKEW (R.A.)

234'-0 x 44'-0 ROLLED STEEL BEAM BRIDGE

91'-0 & 51'-0 END SPANS 92'-0 INTERIOR SPAN

ABUTMENT DETAILS - 'TYPE B'

STA. 528+80.00 IA 92 ?, 2004

POTTAWATTAMIE COUNTY

IOWA DEPARTMENT OF TRANSPORTATION - HIGHWAY DIVISION

DESIGN SHEET NO. 21 OF ? FILE NO. 30846 DESIGN NO. 115

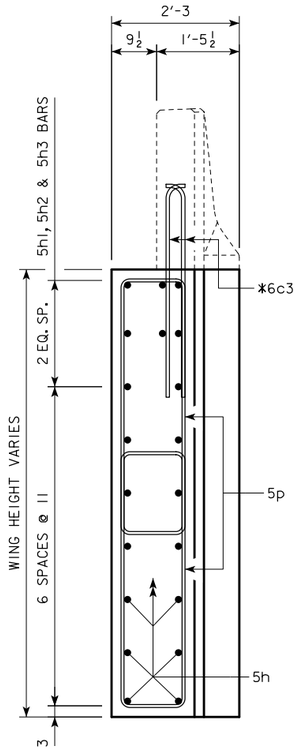

END ELEVATION

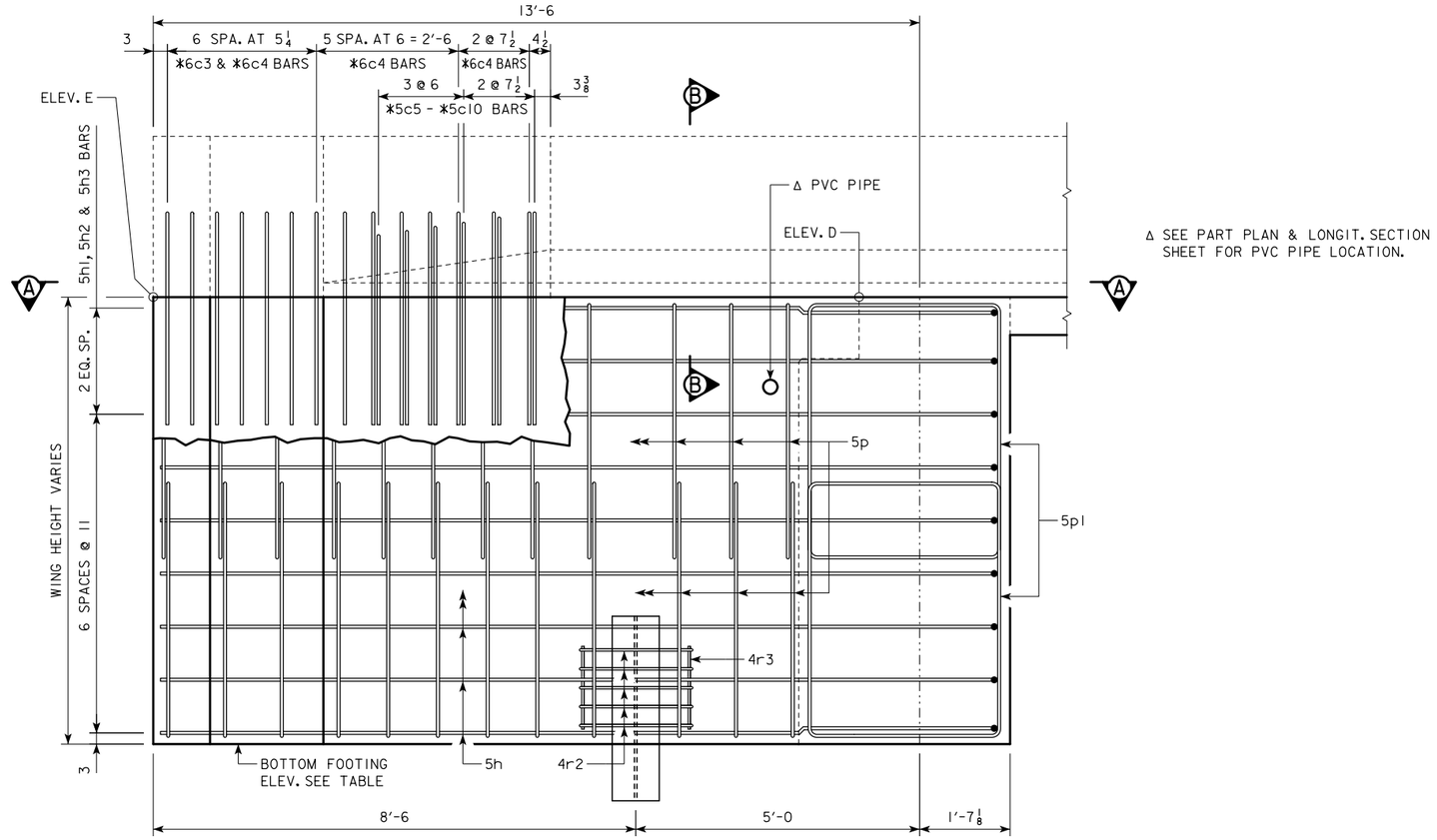

ABUTMENT WING - ELEVATION VIEW

NOTE: WING CONCRETE AND REINFORCING STEEL IS INCLUDED WITH ABUTMENT QUANTITIES

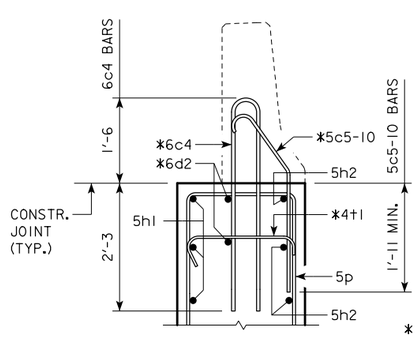

SECTION B-B

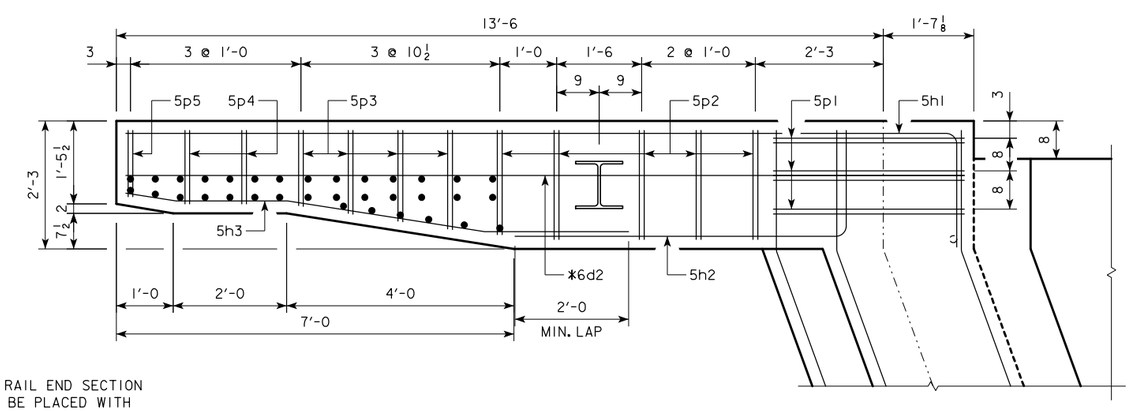

TABLE OF WING ELEVATIONS			
	BOTT. FOOT.	ELEV. 'D'	ELEV. 'E'
NORTHWEST WING	1100.67	1108.49	1109.02
SOUTHWEST WING	1100.67	1107.84	1108.34
NORTHEAST WING	1095.38	1102.62	1102.53
SOUTHEAST WING	1095.38	1102.51	1102.45

* BARRIER RAIL END SECTION BARS TO BE PLACED WITH ABUTMENT WING.

SEE END SECTION DETAILS IN THESE PLANS FOR DETAILS OF BARRIER RAIL END SECTION. REINFORCING BARS 6c3, 6c4, 5c5-10, 6d2 & 4t1 ARE INCLUDED IN THE SUPERSTRUCTURE QUANTITIES.

DESIGN FOR 20° SKEW (R.A.)

234'-0 x 44'-0 ROLLED STEEL BEAM BRIDGE

91'-0 & 51'-0 END SPANS 92'-0 INTERIOR SPAN

ABUTMENT DETAILS - 'TYPE B'

STA. 528+80.00 IA 92 ?, 2004

POTTAWATTAMIE COUNTY

IOWA DEPARTMENT OF TRANSPORTATION - HIGHWAY DIVISION

DESIGN SHEET NO. 22 OF ? FILE NO. 30846 DESIGN NO. 115

BENT BAR DETAILS

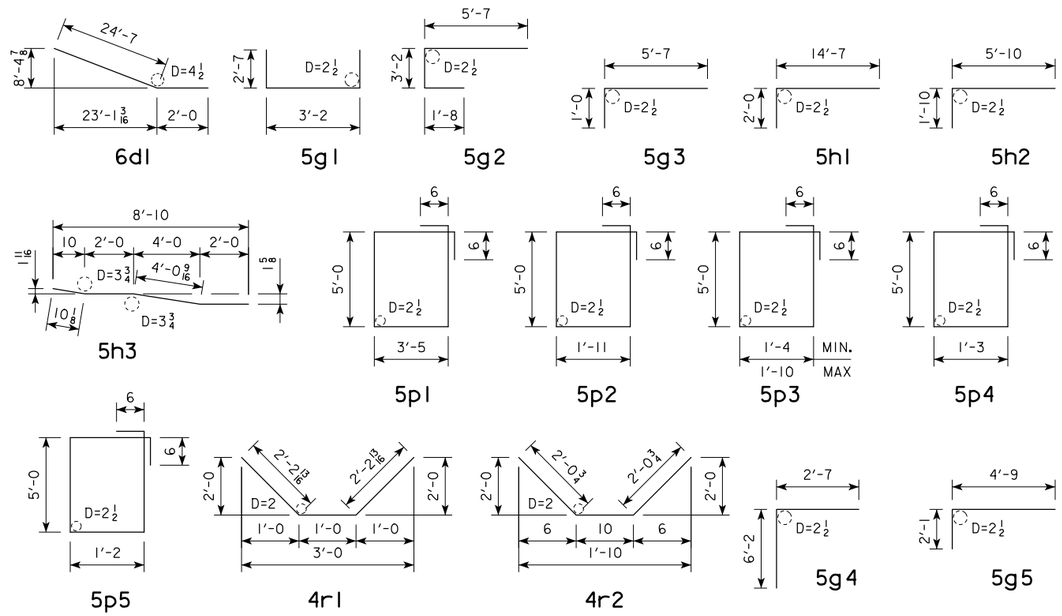

NOTE: ALL DIMENSIONS ARE OUT TO OUT. D= PIN DIAMETER.

REINF. STEEL, EPOXY COATED - ONE ABUT.

BAR	LOCATION	SHAPE	NO.	LENGTH	WEIGHT
6d1	ABUTMENT LONGITUDINAL		34	26'-7	1358
5g1	ABUTMENT BOTTOM HOOP		100	8'-4	869
5g2	ABUTMENT BACK FACE HOOK		39	10'-5	424
5g3	ABUTMENT BACK FACE HOOK BEHIND BEAMS		11	6'-7	76
5h1	ABUTMENT WING LONGITUDINAL BACK FACE		18	16'-7	311
5h2	ABUTMENT WING LONGITUDINAL TRAFFIC FACE		18	7'-8	144
5h3	ABUTMENT WING LONGITUDINAL TRAFFIC FACE		18	8'-11	167
5p1	ABUTMENT END HOOPS		12	18'-2	227
5p2	ABUTMENT WING HOOPS		20	14'-10	309
5p3	ABUTMENT WING HOOPS		16	VARIES	236
5p4	ABUTMENT WING HOOPS		8	13'-6	113
5p5	ABUTMENT WING HOOPS		4	13'-4	56
				TOTAL (LBS.)	4,290

REINF. STEEL, NON-COATED - ONE ABUT.

BAR	LOCATION	SHAPE	NO.	LENGTH	WEIGHT
4r1	ABUTMENT PILE REINFORCING		120	5'-6	441
4r2	WING PILE REINFORCING		20	5'-0	67
4r3	PILE REINFORCING VERTICAL TIE		56	1'-9	65
				TOTAL (LBS.)	573

REINF. STEEL, STAINLESS STEEL - ONE ABUT.

BAR	LOCATION	SHAPE	NO.	LENGTH	WEIGHT
5d2	APPROACH TIE DOWEL		22	3'-6	80
5g4	ABUTMENT FRONT FACE HOOK		39	8'-9	356
5g5	PAVING NOTCH DIAGONAL		50	6'-10	356
DECK CLOSURE - SEE DESIGN SHT. NO. XX					963
				TOTAL (LBS.)	1,755

STRUCT. CONC. (MISC.) - TWO ABUTMENTS

LOCATION	WEST ABUT.	EAST ABUT.	TOTAL (CY)
ABUTMENT & WINGS	64.9	61.7	126.6
TOTAL (CY)	64.9	61.7	126.6

EST. QUANTITIES - TWO ABUTMENTS

ITEM	UNIT	WEST ABUT.	EAST ABUT.	TOTAL
EXCAVATION, CLASS 20	CY	XX.X	XX.X	XX.X
STRUCTURAL CONCRETE (MISC.)	CY	XX.X	XX.X	XX.X
REINF. STEEL, EPOXY COATED	LB	XX.X	XX.X	XX.X
REINF. STEEL, STAINLESS STEEL	LB	XX.X	XX.X	XX.X
STRUCTURAL STEEL	LB	XX.X	XX.X	XX.X
PILES, STEEL, HP 10 X 57	LF	XX.X	XX.X	XX.X
PREBORED HOLES	LF	XX.X	XX.X	XX.X

DESIGN FOR 20° SKEW (R.A.)

234'-0 x 44'-0 ROLLED STEEL BEAM BRIDGE

91'-0 & 51'-0 END SPANS 92'-0 INTERIOR SPAN

ABUTMENT DETAILS - 'TYPE B'

STA. 528+80.00 IA 92 ?, 2004

POTTAWATTAMIE COUNTY

IOWA DEPARTMENT OF TRANSPORTATION - HIGHWAY DIVISION

DESIGN SHEET NO. 23 OF ? FILE NO. 30846 DESIGN NO. 115

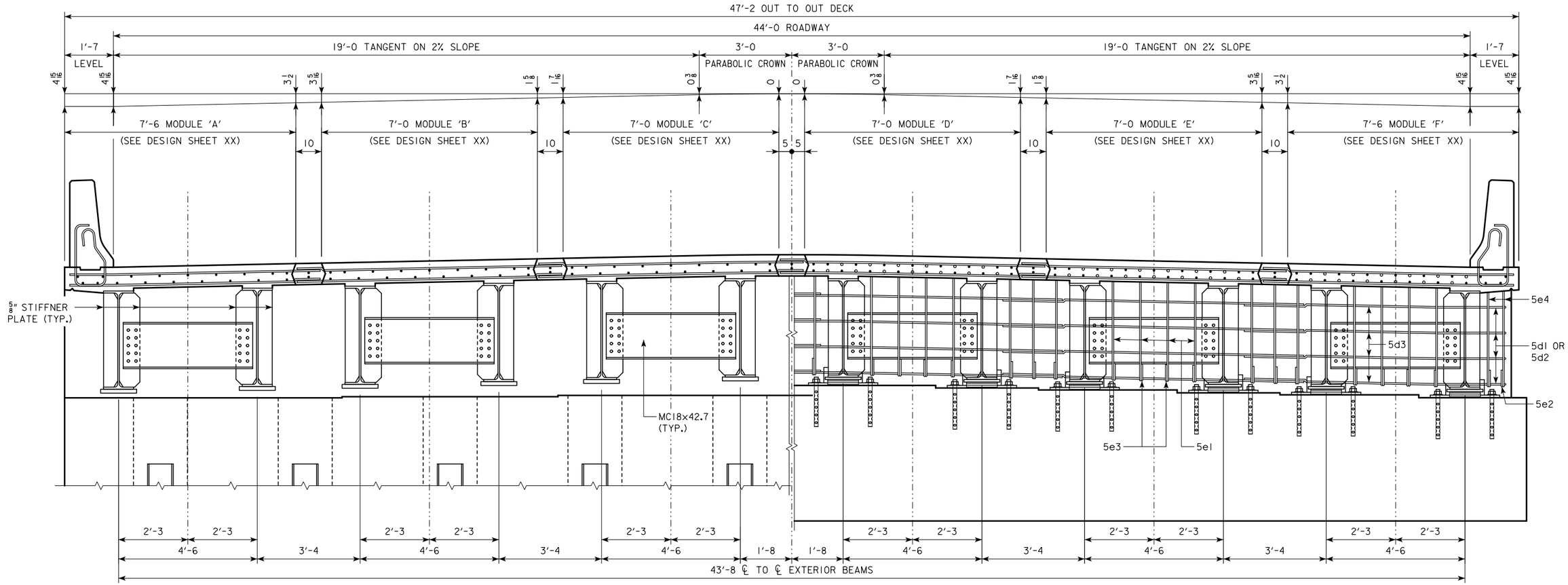

HALF SECTION NEAR TYPE 'A' ABUTMENT

HALF SECTION NEAR PIER

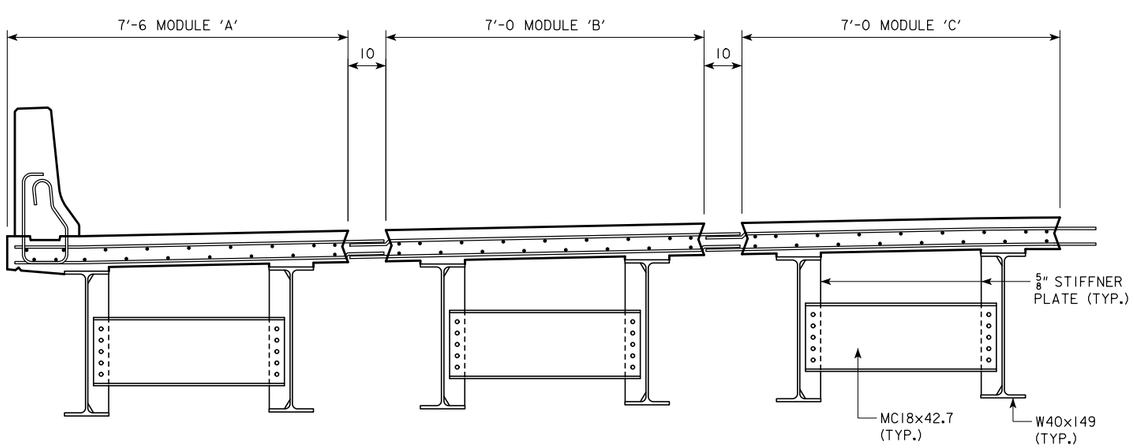

HALF SECTION NEAR MIDSPAN

DESIGN FOR 20° SKEW (R.A.)

234'-0 x 44'-0 ROLLED STEEL BEAM BRIDGE

91'-0 & 51'-0 END SPANS 92'-0 INTERIOR SPAN

SUPERSTRUCTURE DETAILS

STA. 528+80.00 IA 92 ?, 2004

POTTAWATTAMIE COUNTY

IOWA DEPARTMENT OF TRANSPORTATION - HIGHWAY DIVISION

DESIGN SHEET NO. 24 OF ? FILE NO. 30846 DESIGN NO. 115

DESIGN TEAM CJC / PES	POTTAWATTAMIE COUNTY	PROJECT NUMBER BRF-092-1(64)--38-78	SHEET NUMBER 25

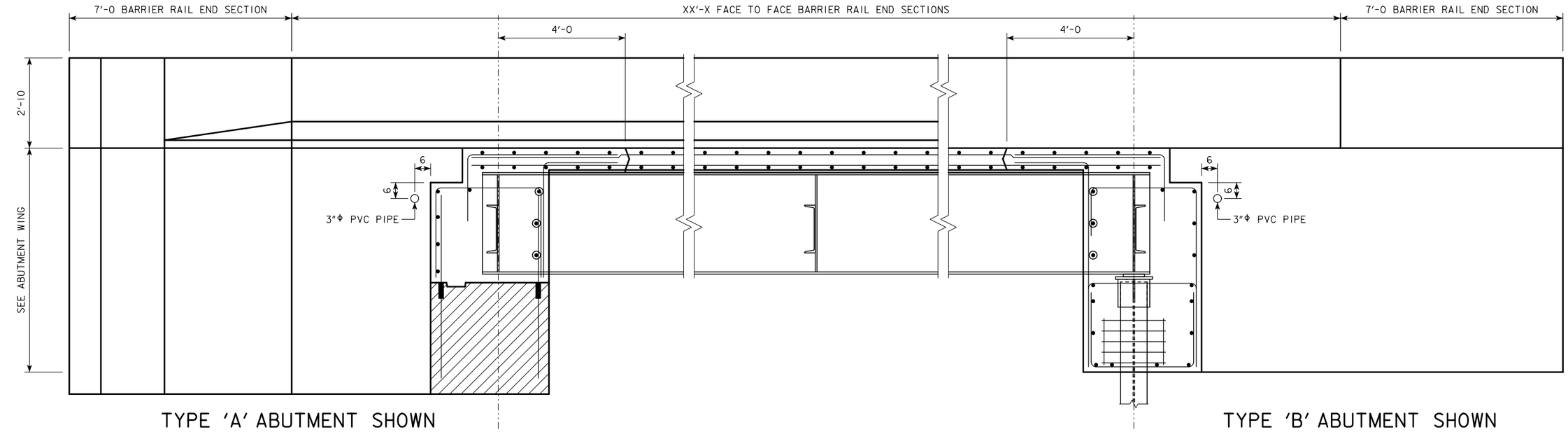

TYPE 'A' ABUTMENT SHOWN

TYPE 'B' ABUTMENT SHOWN

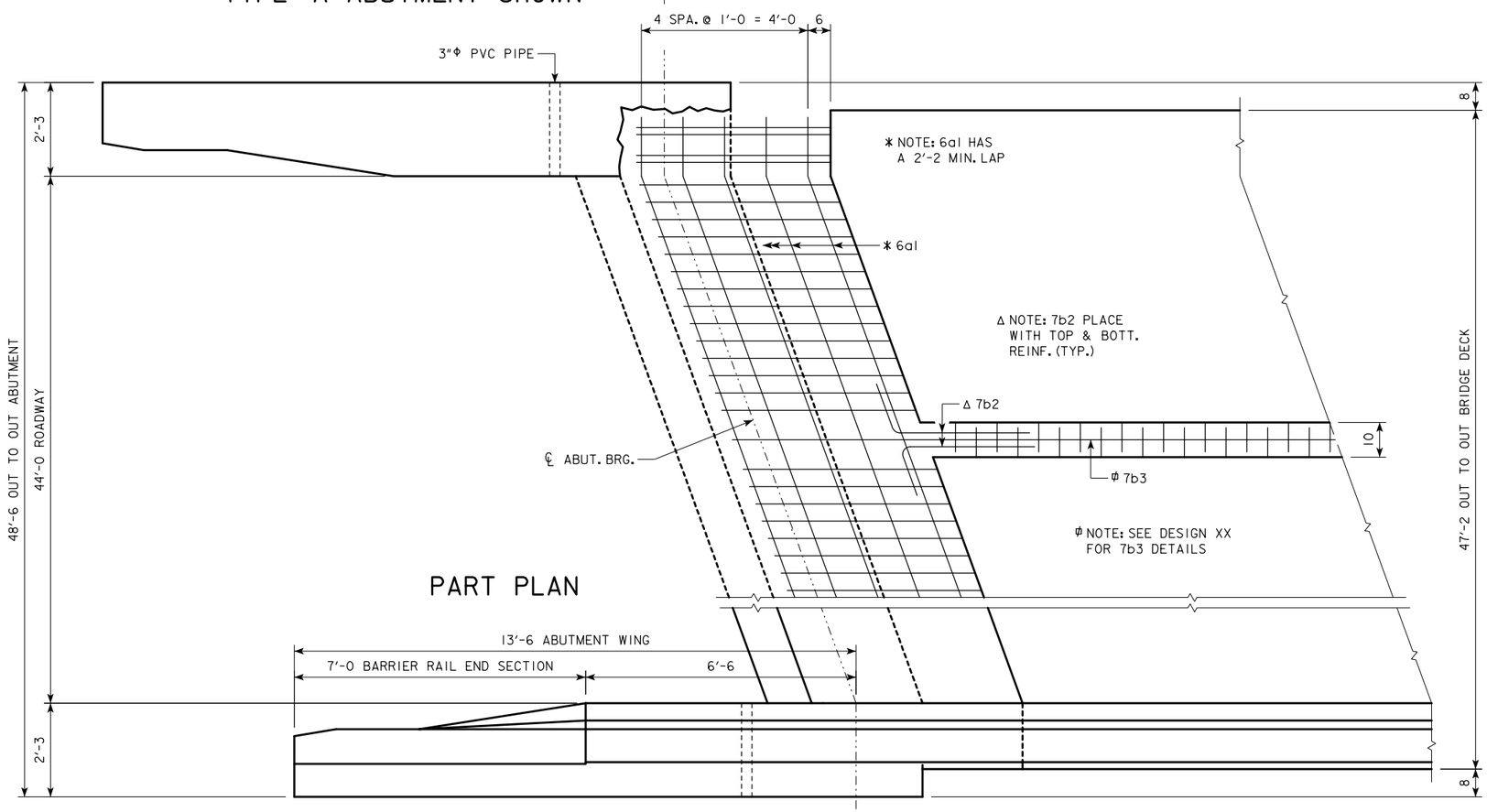

PART PLAN

REINF. STEEL, STAINLESS - ONE DECK CLOSURE AT ABUT.

BAR	LOCATION	SHAPE	NO.	LENGTH	WEIGHT
6a1	DECK, TRANSV. AT PIER CLOSURE		20	25'-11	779
7b2	LONGIT. JOINT ANCHOR		20	4'-6	184
				TOTAL (LBS.)	963

BENT BAR DETAILS

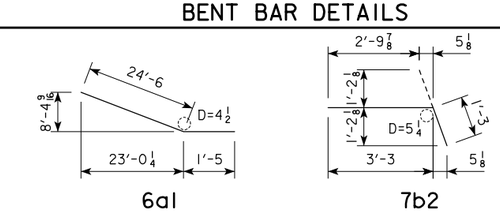

NOTE: ALL DIMENSIONS ARE OUT TO OUT. D= PIN DIAMETER.

DESIGN FOR 20° SKEW (R.A.)

234'-0 x 44'-0 ROLLED STEEL BEAM BRIDGE

91'-0 & 51'-0 END SPANS 92'-0 INTERIOR SPAN

SUPERSTRUCTURE DETAILS

STA. 528+80.00 IA 92 ?, 2004

POTTAWATTAMIE COUNTY

IOWA DEPARTMENT OF TRANSPORTATION - HIGHWAY DIVISION

DESIGN SHEET NO. 25 OF ? FILE NO. 30846 DESIGN NO. 115

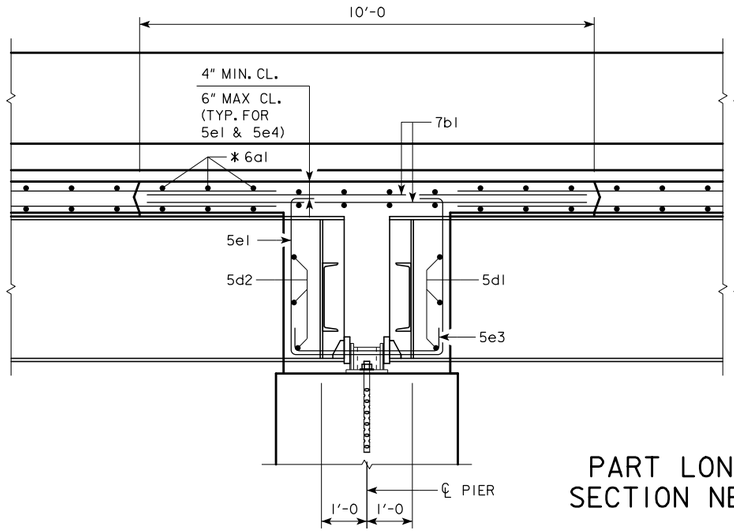

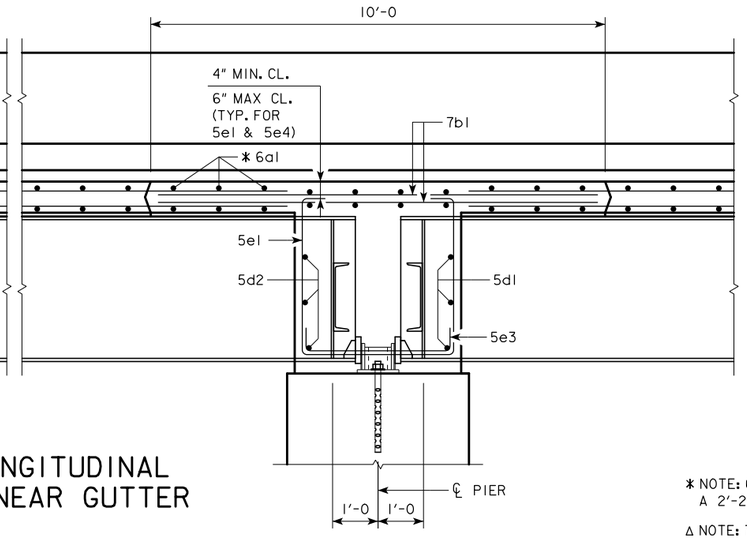

PART LONGITUDINAL
SECTION NEAR GUTTER

* NOTE: 6a1 HAS A 2'-2 MIN. LAP

Δ NOTE: 7b2 PLACE WITH TOP & BOTT. REINF. (TYP.)

Φ NOTE: SEE DESIGN XX FOR 7b3 DETAILS

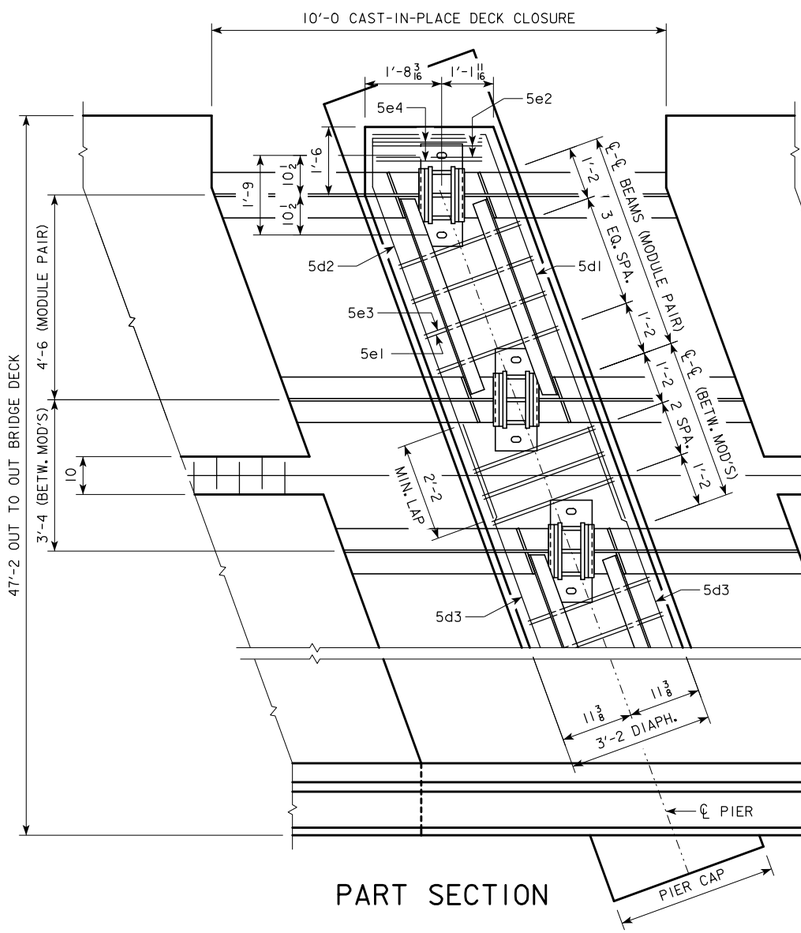

PART SECTION

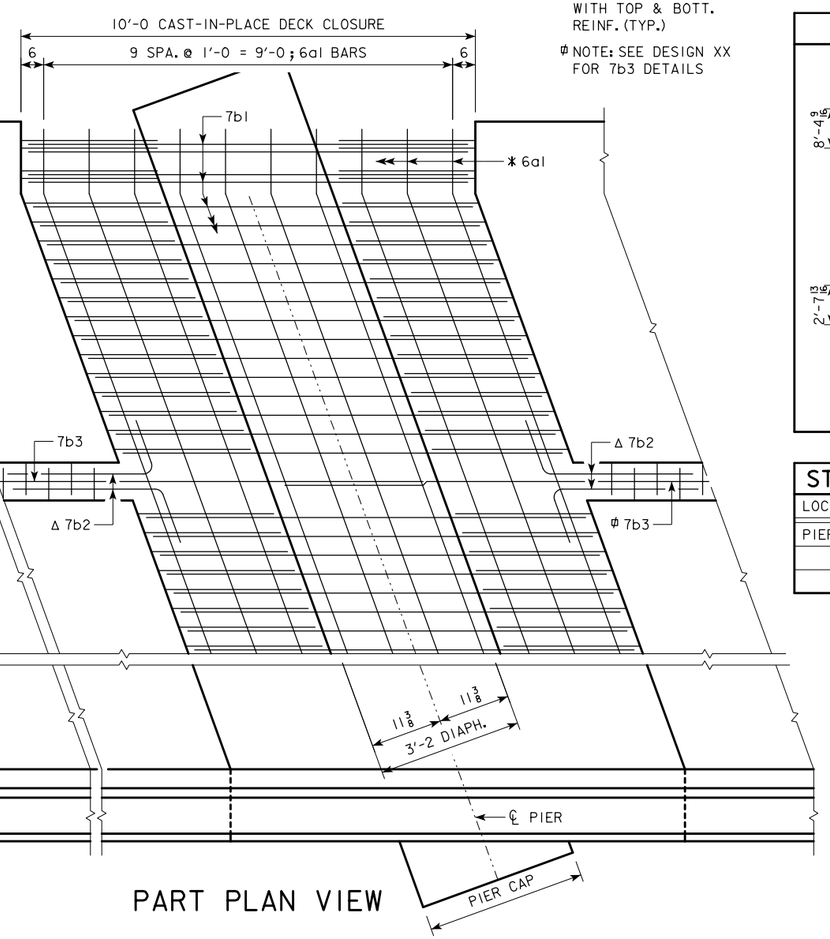

PART PLAN VIEW

REINF. STEEL, EPOXY COATED - ONE PIER DIAPH.

BAR	LOCATION	SHAPE	NO.	LENGTH	WEIGHT
5d1	PIER DIAPH. TRANSV., ENDS		6	11'-6	72
5d2	PIER DIAPH. LONGIT., BETW. MODULE PAIR		6	11'-5	71
5d3	PIER DIAPH. LONGIT., BETW. ADJ. MODULES		24	10'-5	261
5e1	PIER DIAPH. HOOP		39		
5e2	PIER DIAPH. TIES ENDS		4		
5e3	PIER DIAPH. TIES		39		
5e4	PIER DIAPH. HOOP, ENDS		4		
			TOTAL (LBS.)		

REINF. STEEL, STAINLESS - ONE DECK CLOSURE AT PIER

BAR	LOCATION	SHAPE	NO.	LENGTH	WEIGHT
6a1	DECK, TRANSV. AT PIER CLOSURE		40	25'-11	1,557
7b1	DECK, LONGIT. AT PIER CLOSURE		180	9'-8	3,557
7b2	LONGIT. JOINT ANCHOR		40	4'-6	368
			TOTAL (LBS.)		5,482

BENT BAR DETAILS

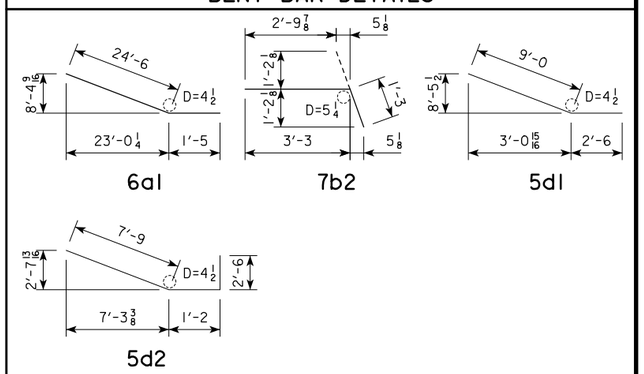

STRUCT. CONCRETE - PIER DIAPH. / DECK CLOSURE

LOCATION	PIER NO. 1	PIER NO. 2	TOTAL (CY)
PIER DIAPH. / DECK CLOSURE	32.5	32.5	65.0
TOTAL (CY)	32.5	32.5	65.0

DESIGN FOR 20° SKEW (R.A.)

234'-0 x 44'-0 ROLLED STEEL BEAM BRIDGE

91'-0 & 51'-0 END SPANS 92'-0 INTERIOR SPAN

SUPERSTRUCTURE DETAILS

STA. 528+80.00 IA 92 ?, 2004

POTTAWATTAMIE COUNTY

IOWA DEPARTMENT OF TRANSPORTATION - HIGHWAY DIVISION

DESIGN SHEET NO. 26 OF ? FILE NO. 30846 DESIGN NO. 115

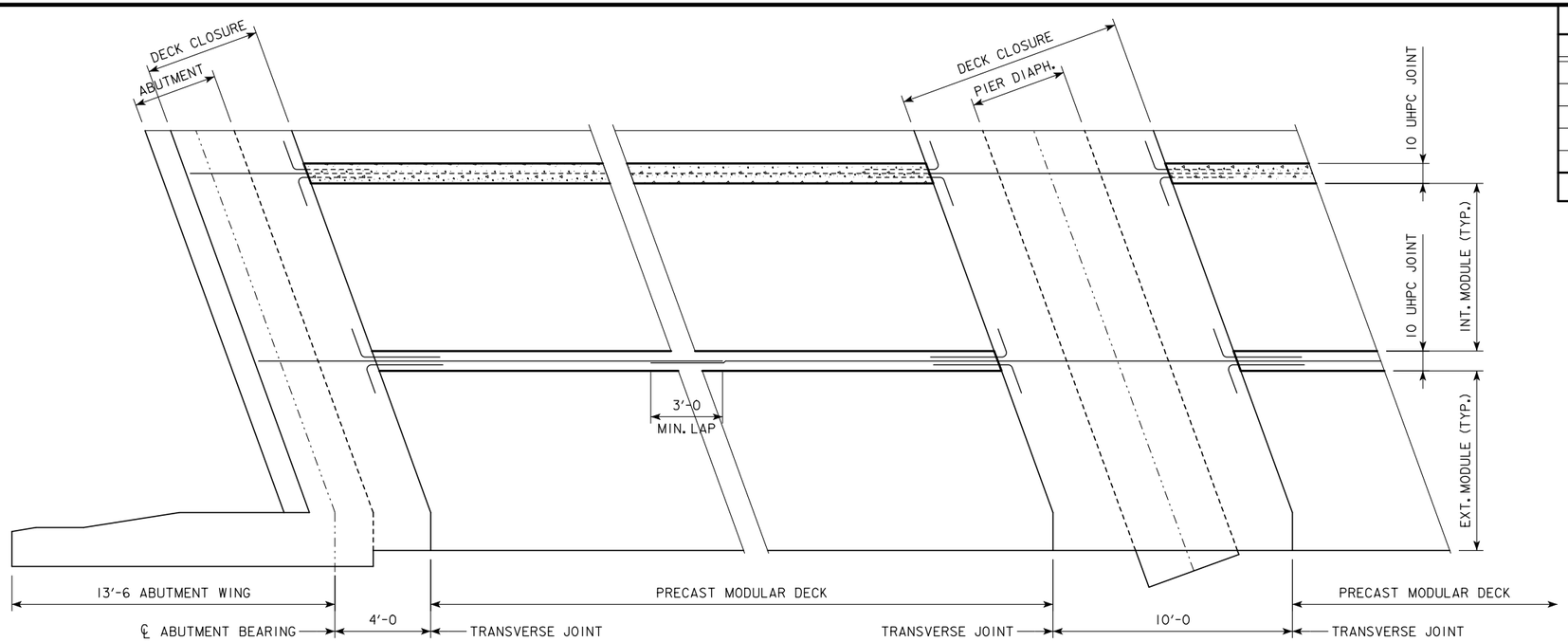

PART PLAN VIEW
SHOWING LONGITUDINAL JOINT DETAILS

REINFORCING BAR LIST

BAR	LOCATION	SHAPE	NO.	LENGTH	WEIGHT
				TOTAL (LBS.)	

ULTRA HIGH PERFORMANCE CONC. SUMMARY

ITEM		TOTAL (CY)
LONGITUDINAL JOINT CLOSURES - SPAN 1	(5 @ XX CY)	XX.X
LONGITUDINAL JOINT CLOSURES - SPAN 2	(5 @ XX CY)	XX.X
LONGITUDINAL JOINT CLOSURES - SPAN 3	(5 @ XX CY)	XX.X
	TOTAL (CY)	XX.X

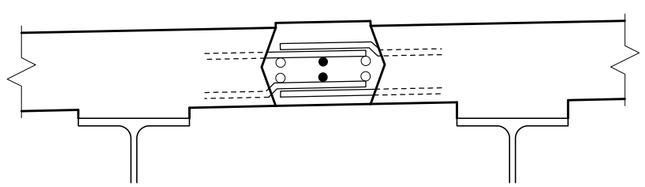

TYPICAL SECTION
AT LONGITUDINAL JOINT

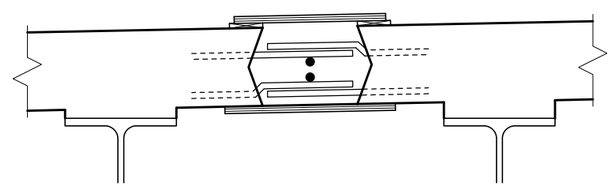

SECTION A-A
SUGGESTED LONGITUDINAL
JOINT FORMING DETAIL

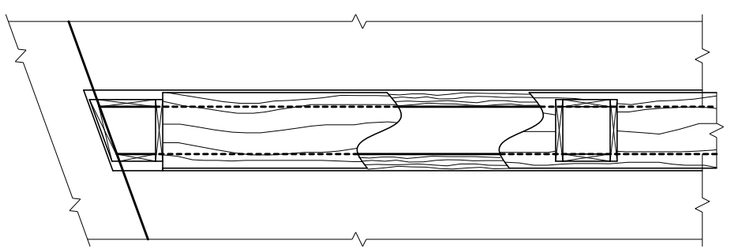

SUGGESTED LONGITUDINAL
JOINT FORMING PLAN

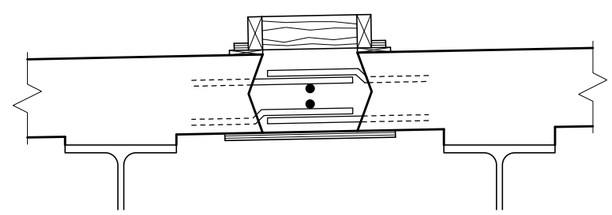

SECTION B-B
SUGGESTED LONGITUDINAL
JOINT CHIMNEY DETAIL

DESIGN FOR 20° SKEW (R.A.)

234'-0 x 44'-0 ROLLED STEEL BEAM BRIDGE

91'-0 & 51'-0 END SPANS 92'-0 INTERIOR SPAN

SUPERSTRUCTURE DETAILS

STA. 528+80.00 IA 92 ?, 2004

POTTAWATTAMIE COUNTY

IOWA DEPARTMENT OF TRANSPORTATION - HIGHWAY DIVISION

DESIGN SHEET NO. 27 OF ? FILE NO. 30846 DESIGN NO. 115

DESIGN FOR 20° SKEW (R.A.)

234'-0 x 44'-0 ROLLED STEEL BEAM BRIDGE

91'-0 & 51'-0 END SPANS 92'-0 INTERIOR SPAN

DECK GRINDING DETAILS

STA. 528+80.00 IA 92 ?, 2004

POTTAWATTAMIE COUNTY

IOWA DEPARTMENT OF TRANSPORTATION - HIGHWAY DIVISION

DESIGN SHEET NO. 28 OF ? FILE NO. 30846 DESIGN NO. 115

BENCH MARK NO. 501 STA. 529+82.22, -20.2127 FND X NE CORNER BRIDGE, ELEV. 1103.648

TOP OF SLAB ELEVATIONS

LOCATION		℄ WEST ABUT. BRG.										℄ PIER NO. 1 BEAM BRGS.											℄ PIER NO. 2 BEAM BRGS.							℄ EAST ABUT. BRG.
		LINE 1	LINE 2	LINE 3	LINE 4	LINE 5	LINE 6	LINE 7	LINE 8	LINE 9	LINE 10	LINE 11	LINE 12	LINE 13	LINE 14	LINE 15	LINE 16	LINE 17	LINE 18	LINE 19	LINE 20	LINE 21	LINE 22	LINE 23	LINE 24	LINE 25	LINE 26	LINE 27	LINE 28	LINE 29
N. GUTTERLINE		1108.45	1108.08	1107.72	1107.38	1107.05	1106.72	1106.41	1106.11	1105.83	1105.55	1105.29	1105.23	1104.98	1104.74	1104.51	1104.30	1104.09	1103.90	1103.72	1103.55	1103.39	1103.25	1103.22	1103.10	1102.98	1102.88	1102.79	1102.70	1102.63
MODULE 'A'	N. BEAM	1108.45	1108.08	1107.72	1107.38	1107.05	1106.72	1106.41	1106.11	1105.83	1105.55	1105.29	1105.23	1104.98	1104.74	1104.52	1104.30	1104.10	1103.90	1103.72	1103.55	1103.40	1103.25	1103.22	1103.10	1102.98	1102.88	1102.79	1102.71	1102.63
	S. BEAM	1108.47	1108.11	1107.75	1107.41	1107.08	1106.76	1106.45	1106.15	1105.87	1105.59	1105.33	1105.27	1105.03	1104.79	1104.56	1104.35	1104.15	1103.96	1103.78	1103.61	1103.46	1103.32	1103.28	1103.16	1103.05	1102.95	1102.86	1102.78	1102.71
MODULE 'B'	N. BEAM	1108.49	1108.12	1107.77	1107.43	1107.10	1106.78	1106.47	1106.18	1105.90	1105.62	1105.36	1105.31	1105.06	1104.83	1104.60	1104.39	1104.19	1104.00	1103.83	1103.66	1103.51	1103.36	1103.33	1103.21	1103.11	1103.01	1102.92	1102.84	1102.77
	S. BEAM	1108.51	1108.15	1107.80	1107.46	1107.13	1106.81	1106.51	1106.22	1105.94	1105.67	1105.41	1105.35	1105.11	1104.87	1104.65	1104.44	1104.25	1104.06	1103.88	1103.72	1103.57	1103.43	1103.40	1103.28	1103.18	1103.08	1102.99	1102.91	1102.85
MODULE 'C'	N. BEAM	1108.53	1108.17	1107.82	1107.48	1107.15	1106.84	1106.54	1106.25	1105.97	1105.70	1105.44	1105.38	1105.14	1104.91	1104.69	1104.48	1104.29	1104.10	1103.93	1103.77	1103.62	1103.48	1103.45	1103.33	1103.23	1103.13	1103.05	1102.97	1102.90
	S. BEAM	1108.55	1108.19	1107.84	1107.50	1107.18	1106.87	1106.57	1106.28	1106.00	1105.73	1105.48	1105.42	1105.18	1104.95	1104.74	1104.53	1104.34	1104.15	1103.98	1103.82	1103.67	1103.54	1103.51	1103.39	1103.29	1103.20	1103.11	1103.04	1102.97
ROADWAY ℄		1108.53	1108.17	1107.83	1107.49	1107.17	1106.86	1106.56	1106.27	1105.99	1105.72	1105.47	1105.42	1105.18	1104.95	1104.73	1104.53	1104.33	1104.15	1103.98	1103.82	1103.67	1103.54	1103.51	1103.40	1103.29	1103.20	1103.12	1103.04	1102.98
MODULE 'D'	N. BEAM	1108.50	1108.14	1107.79	1107.46	1107.14	1106.83	1106.53	1106.24	1105.96	1105.70	1105.44	1105.39	1105.15	1104.92	1104.71	1104.50	1104.31	1104.13	1103.96	1103.80	1103.65	1103.52	1103.49	1103.38	1103.28	1103.18	1103.10	1103.03	1102.97
	S. BEAM	1108.35	1107.99	1107.65	1107.32	1107.00	1106.69	1106.39	1106.10	1105.83	1105.57	1105.32	1105.26	1105.03	1104.80	1104.59	1104.38	1104.19	1104.01	1103.85	1103.69	1103.55	1103.41	1103.39	1103.28	1103.17	1103.08	1103.00	1102.93	1102.87
MODULE 'E'	N. BEAM	1108.23	1107.88	1107.54	1107.21	1106.89	1106.58	1106.28	1106.00	1105.73	1105.47	1105.22	1105.16	1104.93	1104.70	1104.49	1104.29	1104.10	1103.92	1103.76	1103.60	1103.46	1103.33	1103.30	1103.19	1103.09	1103.00	1102.93	1102.86	1102.80
	S. BEAM	1108.08	1107.73	1107.39	1107.06	1106.74	1106.43	1106.14	1105.86	1105.59	1105.33	1105.08	1105.03	1104.80	1104.57	1104.36	1104.17	1103.98	1103.80	1103.64	1103.49	1103.35	1103.22	1103.19	1103.08	1102.99	1102.90	1102.82	1102.75	1102.70
MODULE 'F'	N. BEAM	1107.96	1107.61	1107.27	1106.95	1106.63	1106.33	1106.04	1105.76	1105.49	1105.23	1104.98	1104.93	1104.70	1104.48	1104.27	1104.07	1103.89	1103.71	1103.55	1103.40	1103.26	1103.13	1103.11	1103.00	1102.91	1102.82	1102.74	1102.68	1102.62
	S. BEAM	1107.81	1107.46	1107.12	1106.80	1106.49	1106.18	1105.89	1105.62	1105.35	1105.09	1104.85	1104.80	1104.57	1104.35	1104.14	1103.95	1103.76	1103.59	1103.43	1103.28	1103.15	1103.02	1102.99	1102.89	1102.80	1102.71	1102.64	1102.58	1102.52
S. GUTTERLINE		1107.80	1107.45	1107.12	1106.79	1106.48	1106.18	1105.89	1105.61	1105.34	1105.09	1104.84	1104.79	1104.56	1104.34	1104.14	1103.94	1103.76	1103.59	1103.43	1103.28	1103.14	1103.02	1102.99	1102.89	1102.79	1102.71	1102.64	1102.57	1102.52

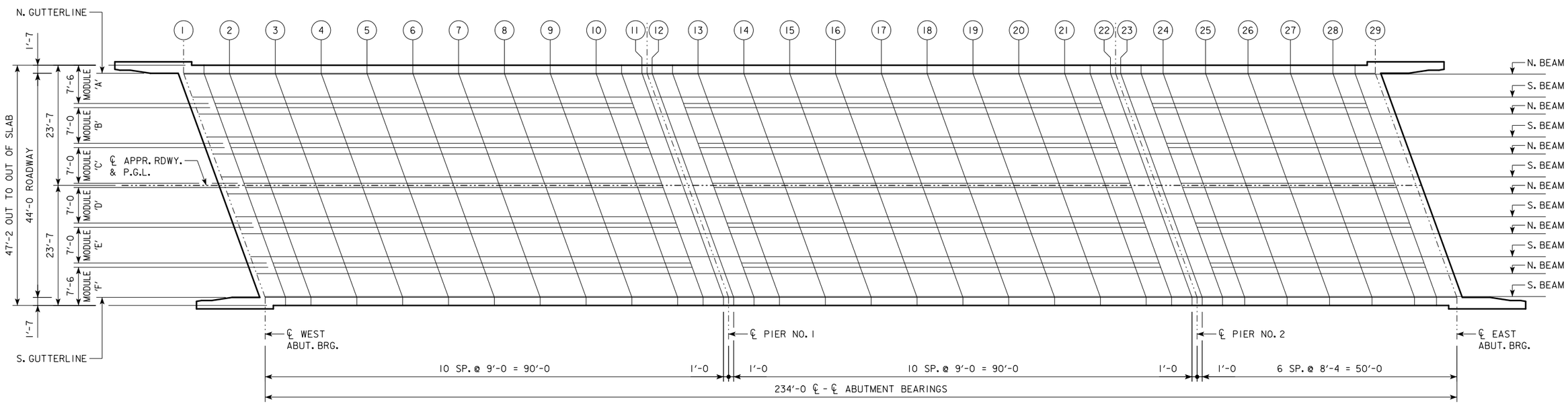

LOCATION OF TOP OF SLAB ELEVATIONS

N

DESIGN FOR 20° SKEW (R.A.)

234'-0 x 44'-0 ROLLED STEEL BEAM BRIDGE

91'-0 & 51'-0 END SPANS 92'-0 INTERIOR SPAN

TOP OF SLAB ELEVATIONS

STA. 528+80.00 IA 92 ?, 2004

POTTAWATTAMIE COUNTY

IOWA DEPARTMENT OF TRANSPORTATION - HIGHWAY DIVISION

DESIGN SHEET NO. 29 OF ? FILE NO. 30846 DESIGN NO. 115

TABLE OF BEAM LINE HAUNCH ELEVATIONS

LOCATION		℄ WEST ABUT. BRG.										℄ PIER NO. 1 BEAM BRGS.											℄ PIER NO. 2 BEAM BRGS.							℄ EAST ABUT. BRG.
		1	2	3	4	5	6	7	8	9	10	11	12	13	14	15	16	17	18	19	20	21	22	23	24	25	26	27	28	29
MODULE 'A'	N. BEAM																													
	S. BEAM																													
MODULE 'B'	N. BEAM																													
	S. BEAM																													
MODULE 'C'	N. BEAM																													
	S. BEAM																													
MODULE 'D'	N. BEAM																													
	S. BEAM																													
MODULE 'E'	N. BEAM																													
	S. BEAM																													
MODULE 'F'	N. BEAM																													
	S. BEAM																													

MISCELLANEOUS DATA TABLE

			℄ WEST ABUT. BRG.										℄ PIER NO. 1 BEAM BRGS.											℄ PIER NO. 2 BEAM BRGS.							℄ EAST ABUT. BRG.
	BEAM LINE		1	2	3	4	5	6	7	8	9	10	11	12	13	14	15	16	17	18	19	20	21	22	23	24	25	26	27	28	29
ANTICIPATED DEFLECTION DUE TO SLAB (IN.)	ALL																														
CROSS SLOPE ADJUSTMENTS (IN.)	ALL EXCEPT C(S) & D(N)																														
	C(S) & D(N)																														
ALLOWABLE FIELD HAUNCH (IN. & FT.)	MAX.	ALL																													
	MIN.	ALL																													

DESIGN FOR 20° SKEW (R.A.)

234'-0 x 44'-0 ROLLED STEEL BEAM BRIDGE

91'-0 & 51'-0 END SPANS 92'-0 INTERIOR SPAN

HAUNCH ELEVATIONS

STA. 528+80.00 IA 92 ?, 2004

POTTAWATTAMIE COUNTY

IOWA DEPARTMENT OF TRANSPORTATION - HIGHWAY DIVISION

DESIGN SHEET NO. 30 OF ? FILE NO. 30846 DESIGN NO. 115

DESIGN TEAM CJC / PES POTTAWATTAMIE COUNTY PROJECT NUMBER BRF-092-1(64)--38-78 SHEET NUMBER 31

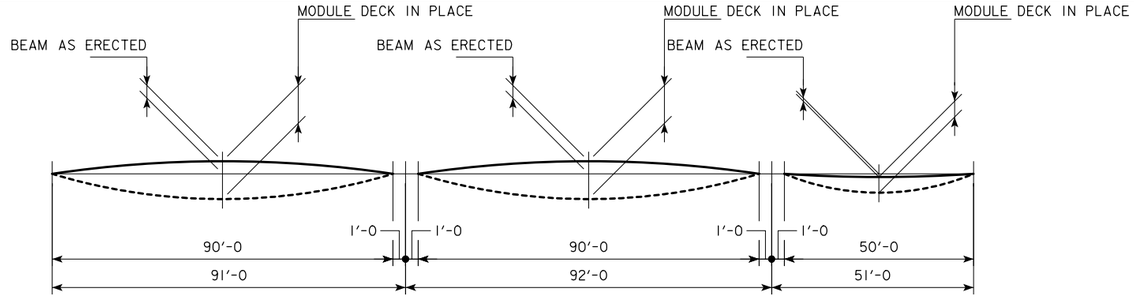

BEAM CAMBER DATA - ALL BEAM LINES

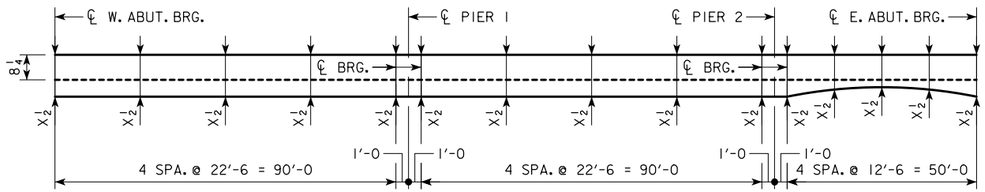

SLAB THICKNESS AT BEAMS
LINES A(N), B(N), C(N), D(S), E(S), F(S)

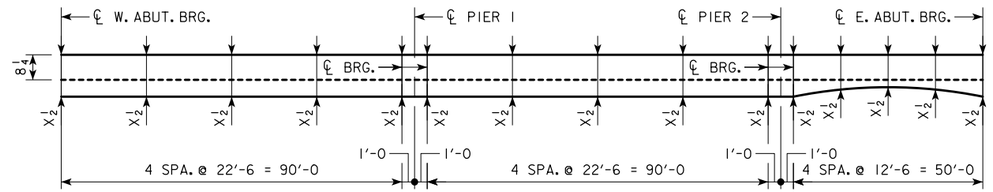

SLAB THICKNESS AT BEAMS
LINE D(N)

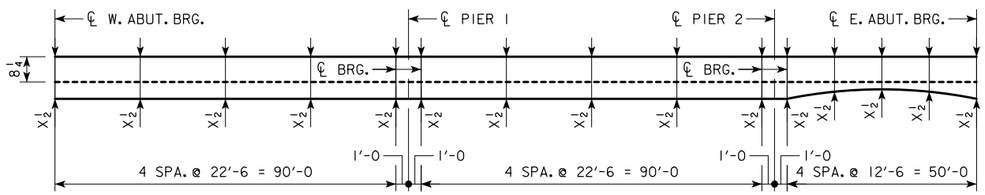

SLAB THICKNESS AT BEAMS
LINE A(S)

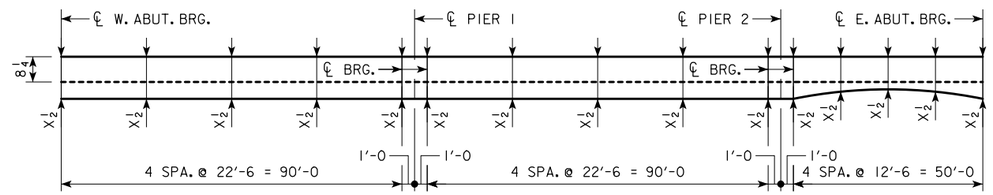

SLAB THICKNESS AT BEAMS
LINE E(N)

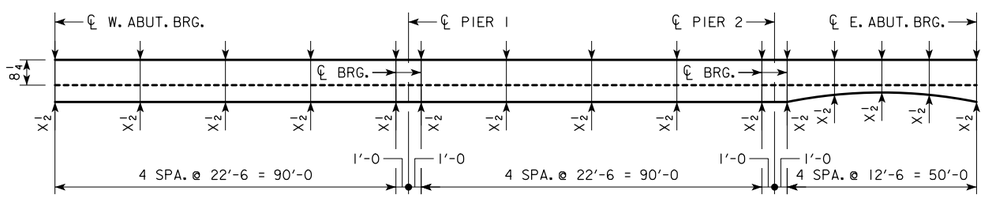

SLAB THICKNESS AT BEAMS
LINE B(S)

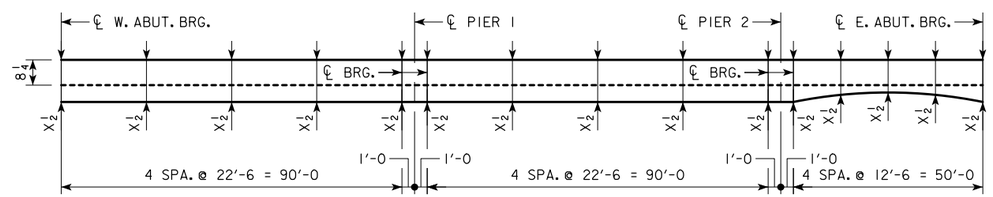

SLAB THICKNESS AT BEAMS
LINE F(N)

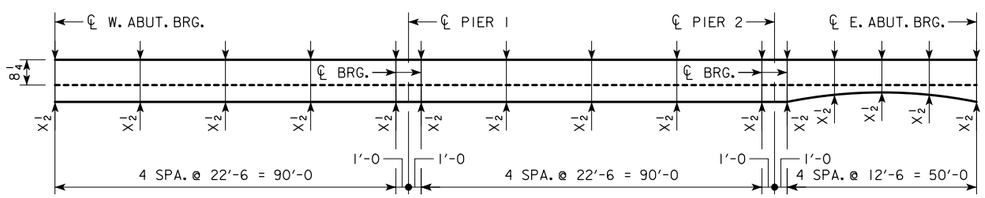

SLAB THICKNESS AT BEAMS
LINE C(S)

DESIGN FOR 20° SKEW (R.A.)

234'-0 x 44'-0 ROLLED STEEL BEAM BRIDGE

91'-0 & 51'-0 END SPANS 92'-0 INTERIOR SPAN

CAMBER & HAUNCH DIAGRAMS

STA. 528+80.00 IA 92 ?, 2004

POTTAWATTAMIE COUNTY

IOWA DEPARTMENT OF TRANSPORTATION - HIGHWAY DIVISION

DESIGN SHEET NO. 31 OF ? FILE NO. 30846 DESIGN NO. 115

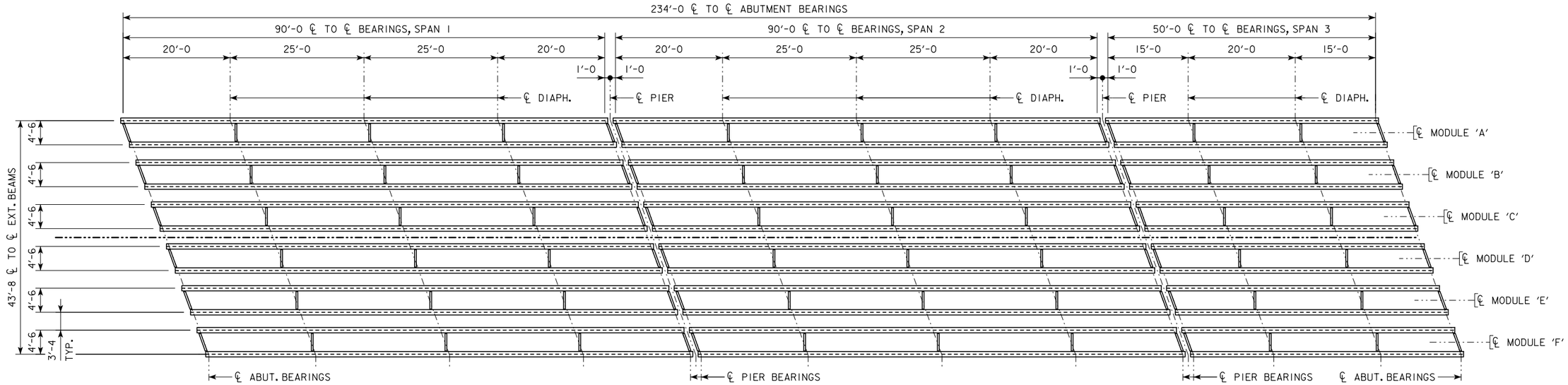

FRAMING PLAN

(SEE "FRAMING PLAN - M90 MODULE" & "FRAMING PLAN - M50 MODULE" FOR ADDITIONAL DETAILS)

N

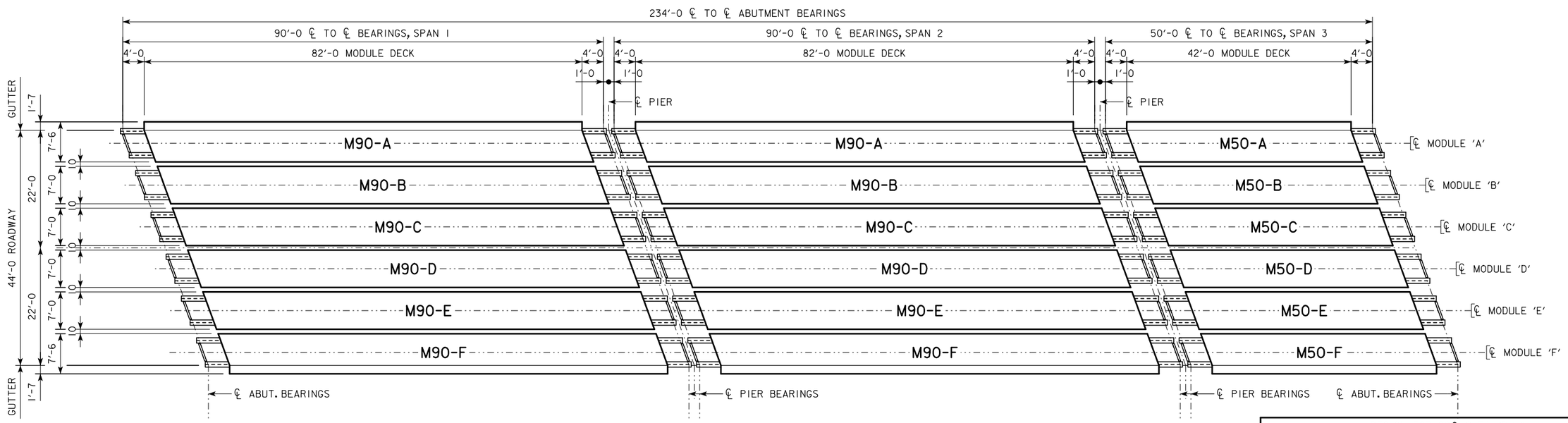

MODULE PLAN

DESIGN FOR 20° SKEW (R.A.)

234'-0 x 44'-0 ROLLED STEEL BEAM BRIDGE

91'-0 & 51'-0 END SPANS — 92'-0 INTERIOR SPAN

FRAMING & MODULE PLAN

STA. 528+80.00 IA 92 — ?, 2004

POTTAWATTAMIE COUNTY

IOWA DEPARTMENT OF TRANSPORTATION - HIGHWAY DIVISION

DESIGN SHEET NO. 32 OF ? FILE NO. 30846 DESIGN NO. 115

DESIGN TEAM CJC / PES	POTTAWATTAMIE COUNTY	PROJECT NUMBER BRF-092-1(64)--38-78	SHEET NUMBER 33

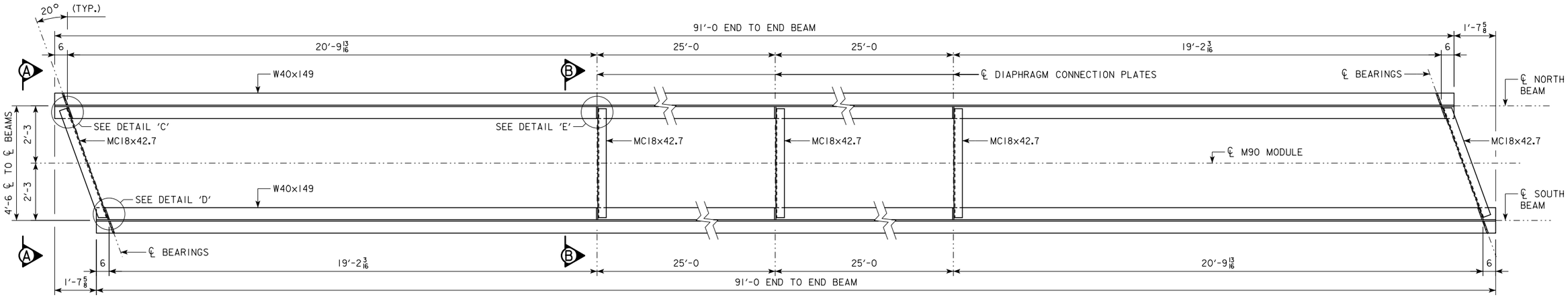

FRAMING PLAN - M90 MODULE (TYP.)

(W40x149 TOP FLANGE NOT SHOWN FOR CLARITY)

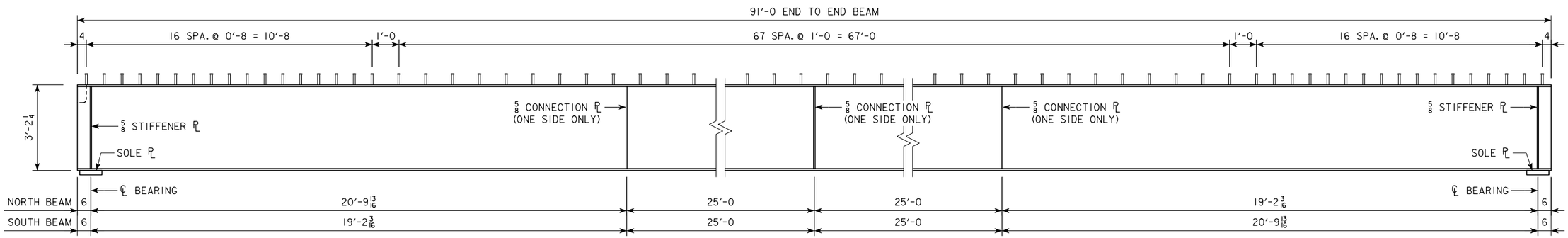

M90 BEAM DETAIL - W40x149

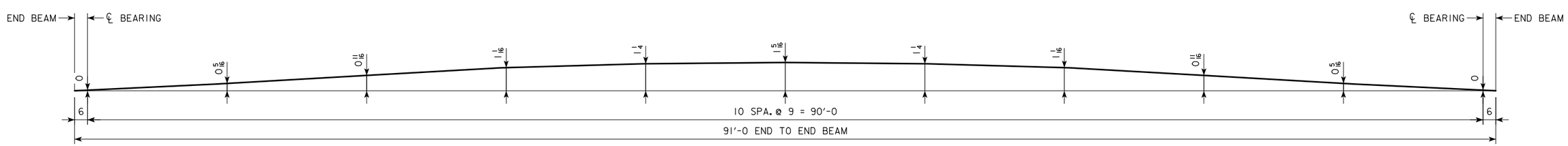

M90 CAMBER DIAGRAM - W40x149

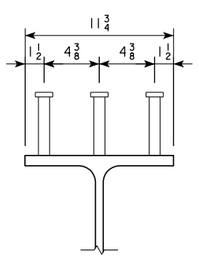

NOTE: ALL STUDS TO BE 5" x 7/8"Φ

SHEAR STUD DETAIL (TYP.)

REFER TO DESIGN SHEET XX FOR SECTION A-A & B-B

REFER TO DESIGN SHEET XX FOR DETAILS C, D & E

STRUCT. STEEL - (1) M90 MODULE

LOCATION	QTY. (LB)
BEAMS	27,118
DIAPHRAGMS	936
STIFFENERS & CONNECTION PLATES	372
FASTENERS & STUDS	XX.X
TOTAL (LB)	XX.X

DESIGN FOR 20° SKEW (R.A.)

234'-0 x 44'-0 ROLLED STEEL BEAM BRIDGE

91'-0 & 51'-0 END SPANS 92'-0 INTERIOR SPAN

FRAMING PLAN - M90 MODULE

STA. 528+80.00 IA 92 ?, 2004

POTTAWATTAMIE COUNTY

IOWA DEPARTMENT OF TRANSPORTATION - HIGHWAY DIVISION

DESIGN SHEET NO. 33 OF ? FILE NO. 30846 DESIGN NO. 115

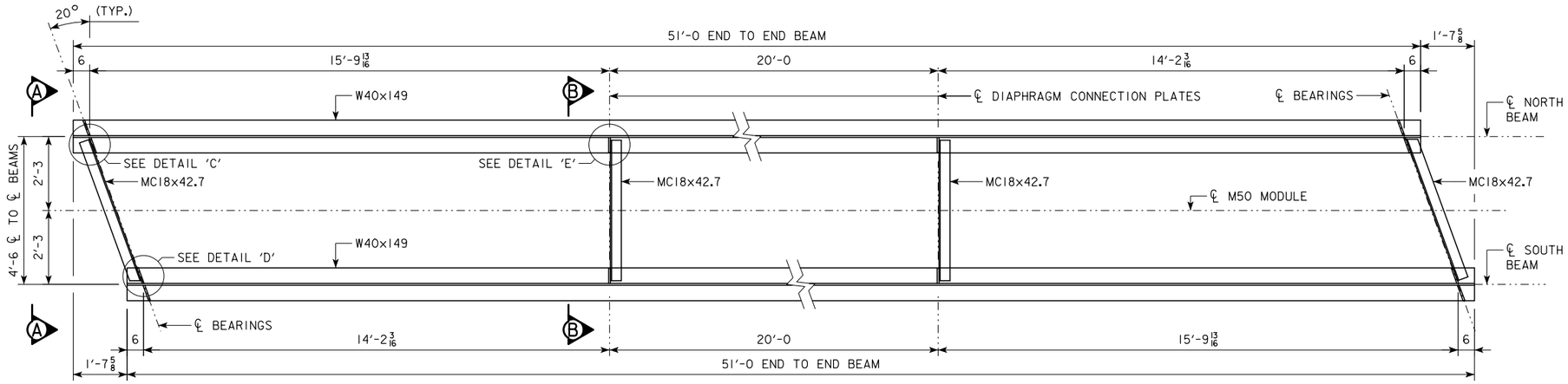

FRAMING PLAN - M50 MODULE (TYP.)

(W40x149 TOP FLANGE NOT SHOWN FOR CLARITY)

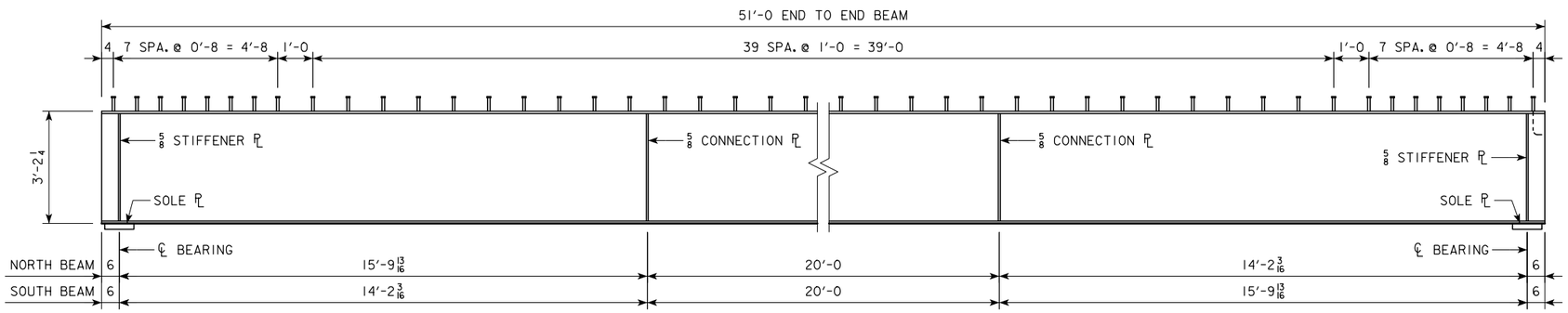

M50 BEAM DETAILS - W40x149

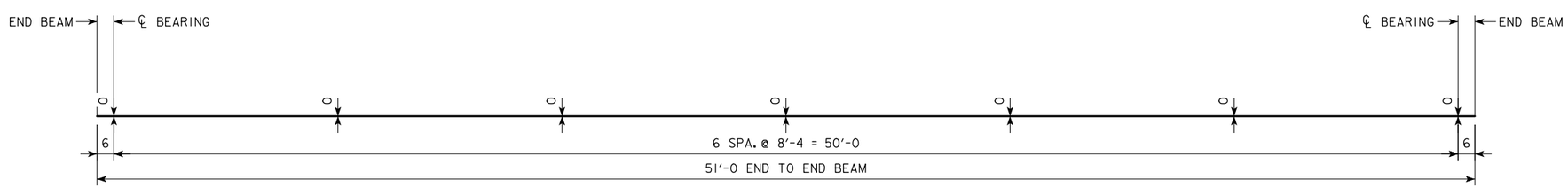

M50 CAMBER DIAGRAM - W40x149

(BEAM DESIGNED FOR ZERO CAMBER)

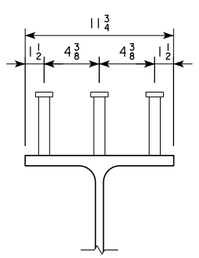

NOTE: ALL STUDS TO BE 5" x 7/8"Φ

SHEAR STUD DETAIL (TYP.)

REFER TO DESIGN SHEET XX FOR SECTION A-A & B-B

REFER TO DESIGN SHEET XX FOR DETAILS C, D & E

STRUCT. STEEL - (1) M50 MODULE

LOCATION	QTY. (LB)
BEAMS	15,198
DIAPHRAGMS	754
STIFFENERS & CONNECTION PLATES	301
FASTENERS & STUDS	XX.X
TOTAL (LB)	XX.X

DESIGN FOR 20° SKEW (R.A.)

234'-0 x 44'-0 ROLLED STEEL BEAM BRIDGE

91'-0 & 51'-0 END SPANS 92'-0 INTERIOR SPAN

FRAMING PLAN - M50 MODULE

STA. 528+80.00 IA 92 ?, 2004

POTTAWATTAMIE COUNTY

IOWA DEPARTMENT OF TRANSPORTATION - HIGHWAY DIVISION

DESIGN SHEET NO. 34 OF ? FILE NO. 30846 DESIGN NO. 115

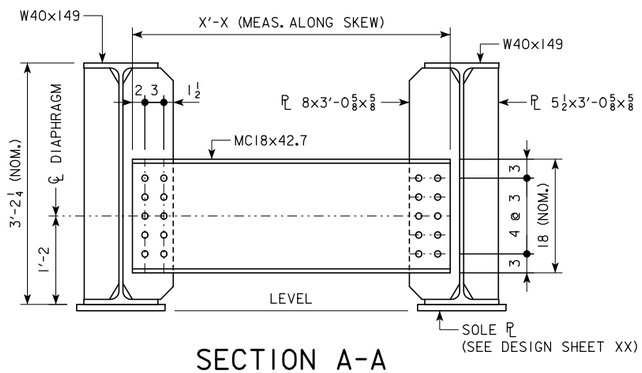

SECTION A-A
(TYP. AT ABUT. AND PIER DIAPHRAGMS)

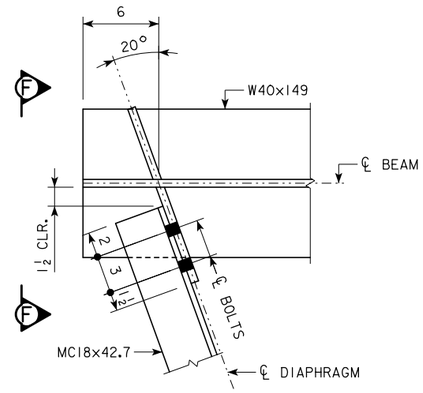

DETAIL 'C'
(TYP. AT ABUT. AND PIER DIAPHRAGMS)

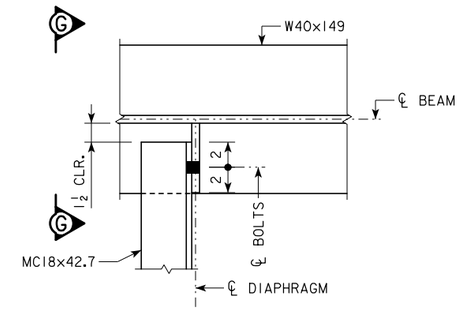

DETAIL 'E'

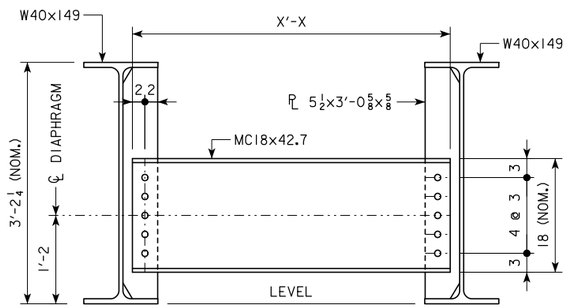

SECTION B-B
(TYP. AT INTERMEDIATE DIAPHRAGMS)

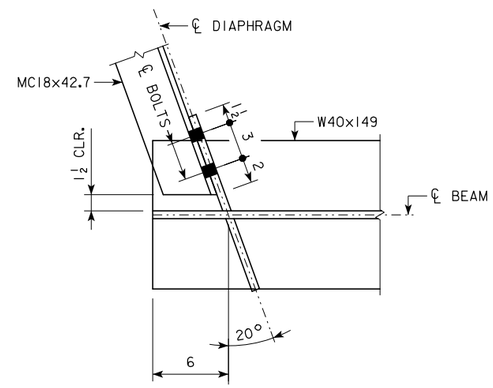

DETAIL 'D'

GRADE DECREASES

CAULK CORNERS BETWEEN FLANGE DEFLECTOR AND EXTERIOR GIRDER. CAULKING MATERIAL SHALL BE NEUTRAL CURE AND NON-SAG SILICONE. THREE PRODUCTS MEETING THESE CRITERIA ARE DOW 888, CSL 342 JOINT SEALANT, AND CRAFCO ROAD SAVER SILICONE.

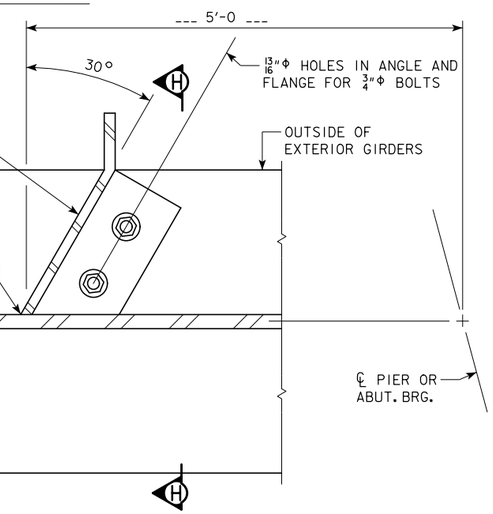

FLANGE DEFLECTOR DETAILS
(? REQUIRED PER BRIDGE)

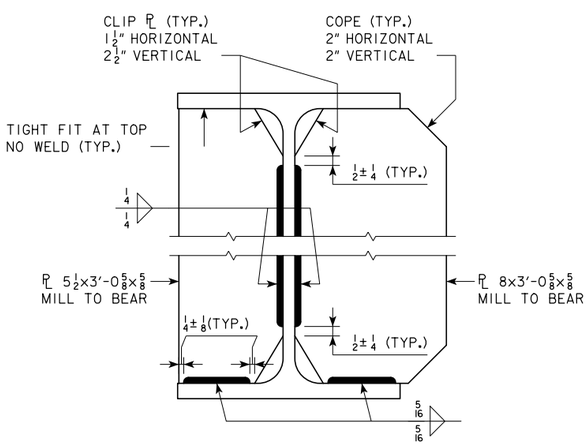

SECTION F-F

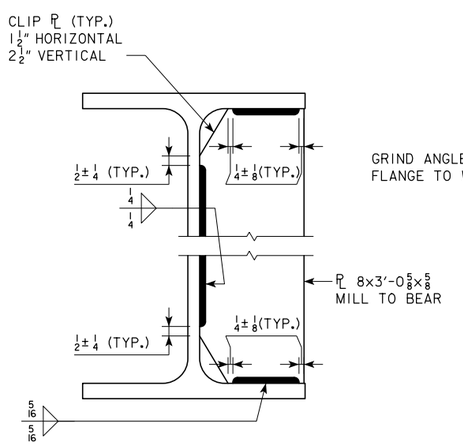

SECTION G-G

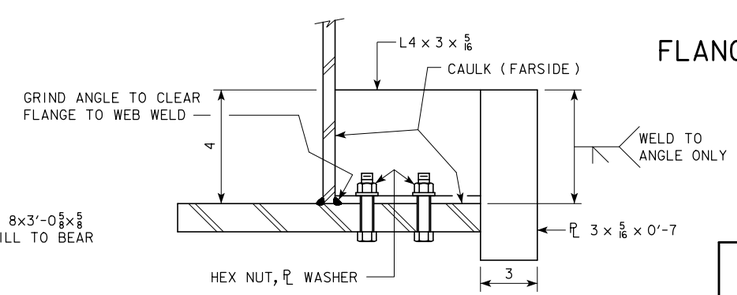

SECTION H-H

FLANGE DEFLECTORS ARE REQUIRED ON THE OUTSIDE OF THE EXTERIOR GIRDERS AT THE ? ABUTMENTS AND THE ? SIDE OF ALL PIERS.

NOTE:
THIS SHEET IS PRIMARILY FOR THE USE OF FABRICATOR'S WORKMEN AND IOWA DEPARTMENT OF TRANSPORTATION INSPECTORS IN INTERPRETING PLAN DETAILS. IT COVERS THE LOCATIONS OF WELD TERMINI THAT ARE NOT SPECIFIED BY TYPICAL WELD SYMBOLS.

DESIGN FOR 20° SKEW (R.A.)

234'-0 x 44'-0 ROLLED STEEL BEAM BRIDGE

91'-0 & 51'-0 END SPANS 92'-0 INTERIOR SPAN

FRAMING DETAILS

STA. 528+80.00 IA 92 ?, 2004

POTTAWATTAMIE COUNTY

IOWA DEPARTMENT OF TRANSPORTATION - HIGHWAY DIVISION

DESIGN SHEET NO. 35 OF ? FILE NO. 30846 DESIGN NO. 115

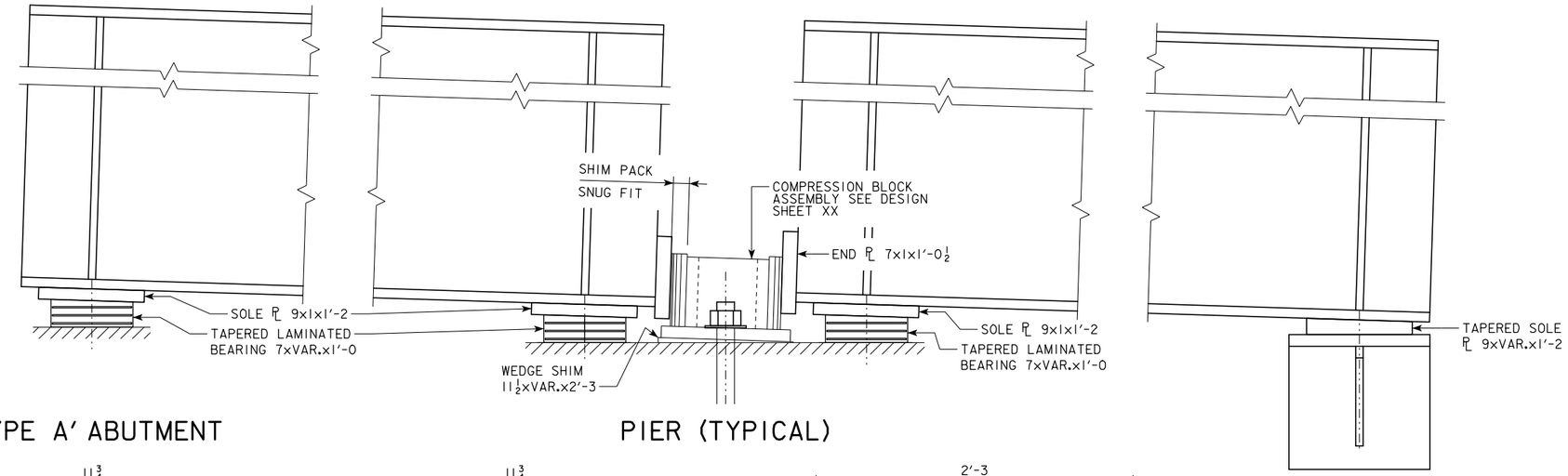

'TYPE A' ABUTMENT

PIER (TYPICAL)

'TYPE A' ABUT. BRG.		
	TAPER DIMENSIONS	
LOCATION	'w' DIM.	'e' DIM.
W. ABUTMENT	X.XX	X.XX
E. ABUTMENT	X.XX	X.XX

PIER BEARING		
	TAPER DIMENSIONS	
LOCATION	'w' DIM.	'e' DIM.
PIER 1 WEST BRG.	X.XX	X.XX
PIER 1 EAST BRG.	X.XX	X.XX
PIER 2 WEST BRG.	X.XX	X.XX
PIER 2 EAST BRG.	X.XX	X.XX

PIER WEDGE SHIM		
	TAPER DIMENSIONS	
LOCATION	'w' DIM.	'e' DIM.
PIER 1	X.XX	X.XX
PIER 2	X.XX	X.XX

'TYPE B' ABUT. BRG.		
	TAPER DIMENSIONS	
LOCATION	'w' DIM.	'e' DIM.
W. ABUTMENT	X.XX	X.XX
E. ABUTMENT	X.XX	X.XX

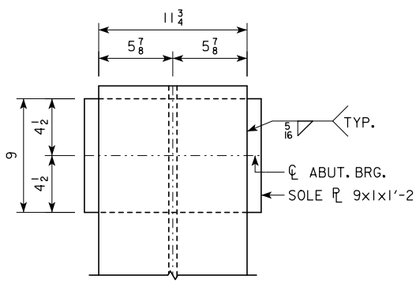

BEAM END DETAIL
'TYPE A' ABUTMENT

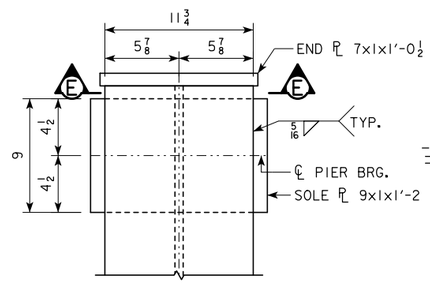

BEAM END DETAIL
AT PIER (TYP.)

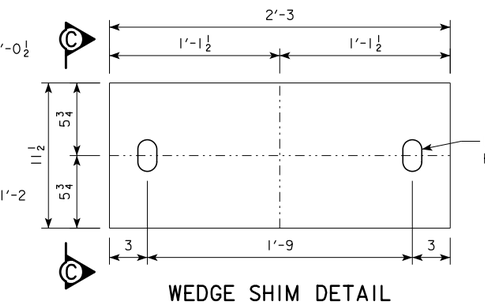

WEDGE SHIM DETAIL
AT PIER (TYP.)

'TYPE B' ABUTMENT

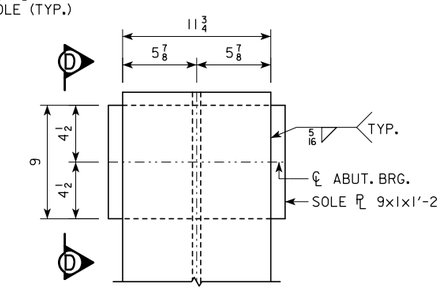

BEAM END DETAIL
'TYPE B' ABUTMENT

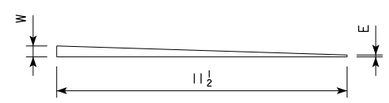

SECTION B-B

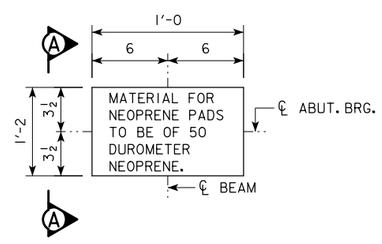

TAPERED ELASTOMERIC
BEARING PLAN
(ABUTMENT)

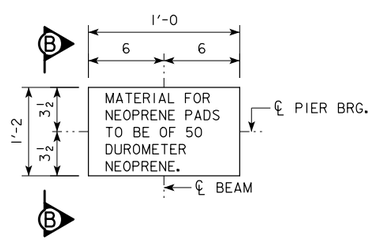

TAPERED ELASTOMERIC
BEARING PLAN
(PIER)

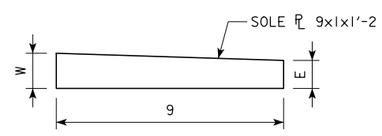

SECTION D-D

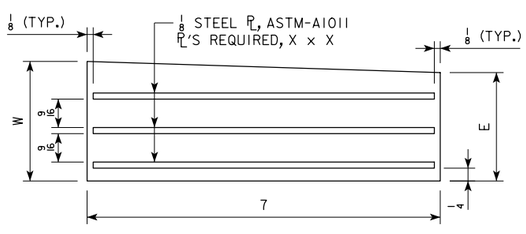

SECTION A-A

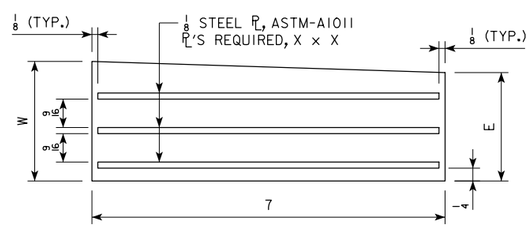

SECTION B-B

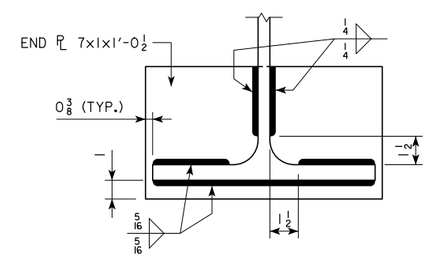

SECTION E-E

DESIGN FOR 20° SKEW (R.A.)

234'-0 x 44'-0 ROLLED STEEL BEAM BRIDGE

91'-0 & 51'-0 END SPANS — 92'-0 INTERIOR SPAN

BEARING DETAILS

STA. 528+80.00 IA 92 — ?, 2004

POTTAWATTAMIE COUNTY

IOWA DEPARTMENT OF TRANSPORTATION - HIGHWAY DIVISION

DESIGN SHEET NO. 36 OF ? FILE NO. 30846 DESIGN NO. 115

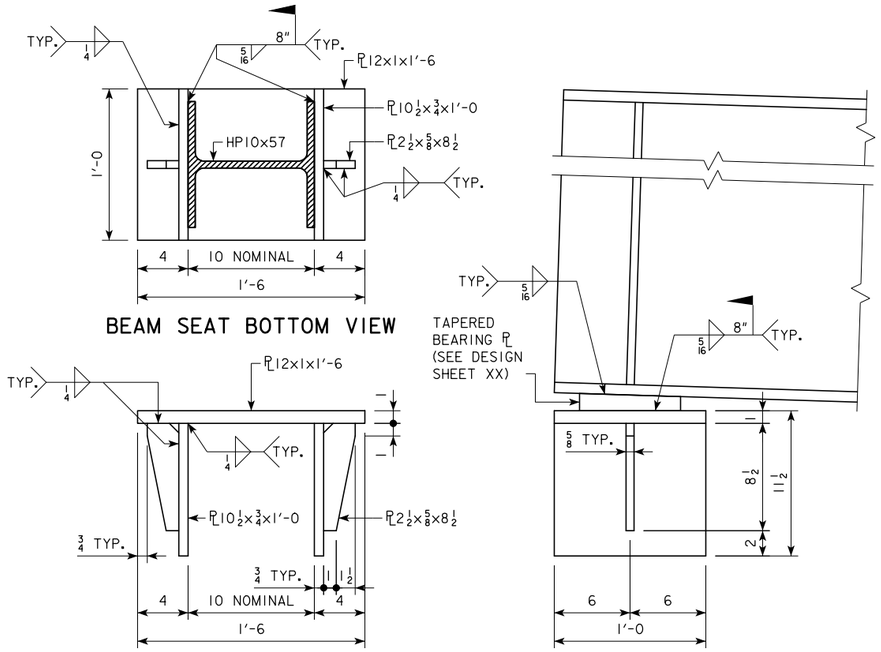

ABUTMENT BEAM SEAT DETAILS

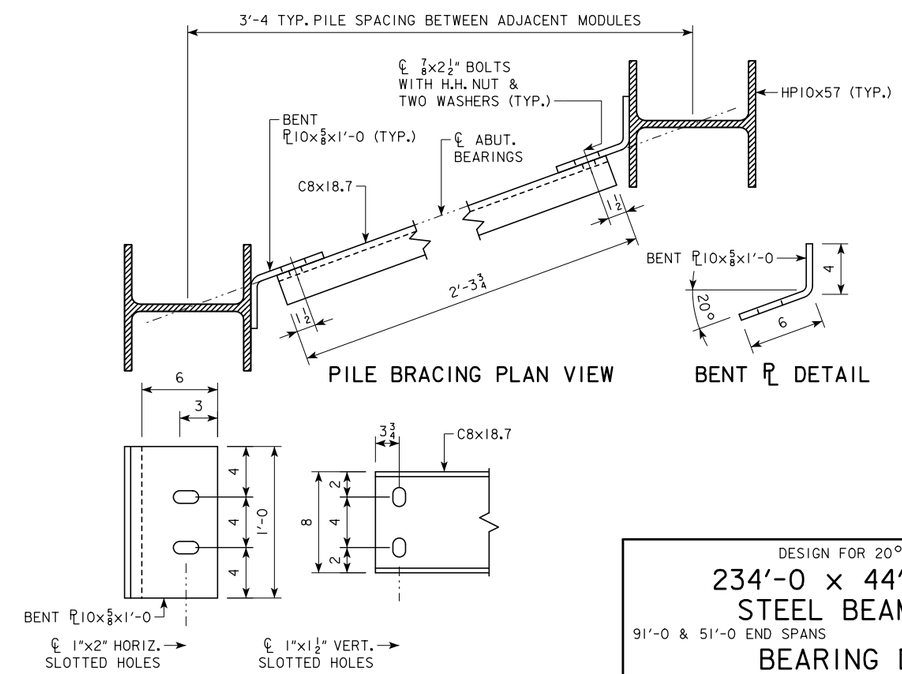

SLOTTED HOLE DETAIL

PILE BRACING DETAILS

DESIGN FOR 20° SKEW (R.A.)

234'-0 x 44'-0 ROLLED STEEL BEAM BRIDGE

91'-0 & 51'-0 END SPANS — 92'-0 INTERIOR SPAN

BEARING DETAILS

STA. 528+80.00 IA 92 — ?, 2004

POTTAWATTAMIE COUNTY

IOWA DEPARTMENT OF TRANSPORTATION - HIGHWAY DIVISION

DESIGN SHEET NO. 37 OF ? FILE NO. 30846 DESIGN NO. 115

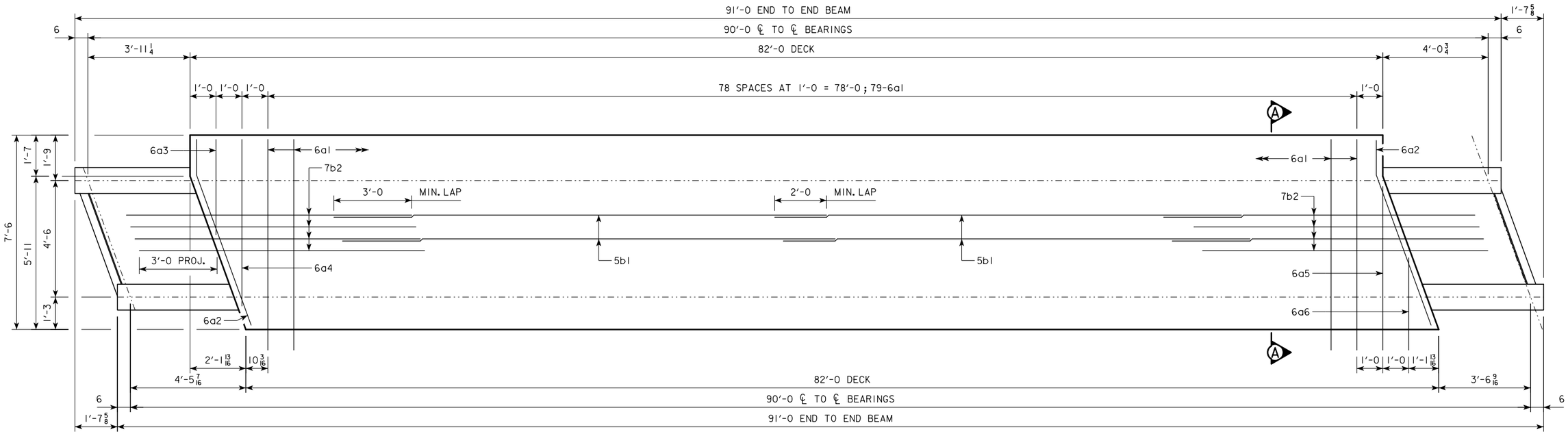

REINF. STEEL, STAINLESS - (1) MODULE

BAR	LOCATION	SHAPE	NO.	LENGTH	WEIGHT
6a1	TRANSVERSE	——	158	8'-2	1,938
6a2	TRANSVERSE, SKEWED, DECK ENDS	—/	4	7'-6	45
6a3	TRANSVERSE, DECK END	——	2	3'-8	11
6a4	TRANSVERSE, DECK END	——	2	6'-5	19
6a5	TRANSVERSE, DECK END	——	2	6'-4	19
6a6	TRANSVERSE, DECK END	——	2	3'-7	11
5b1	LONGITUDINAL	——	34	36'-6	1,294
7b2	LONGITUDINAL, DECK ENDS	——	60	12'-0	1,472
			TOTAL (LBS.)		4,809

BENT BAR DETAILS

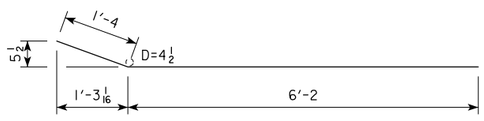

NOTE: ALL DIMENSIONS ARE OUT TO OUT. D = PIN DIA.

HIGH PERF. CONC. - 1 MODULE

LOCATION	QTY. (CY)
DECK	16.4
TOTAL (CY)	16.4

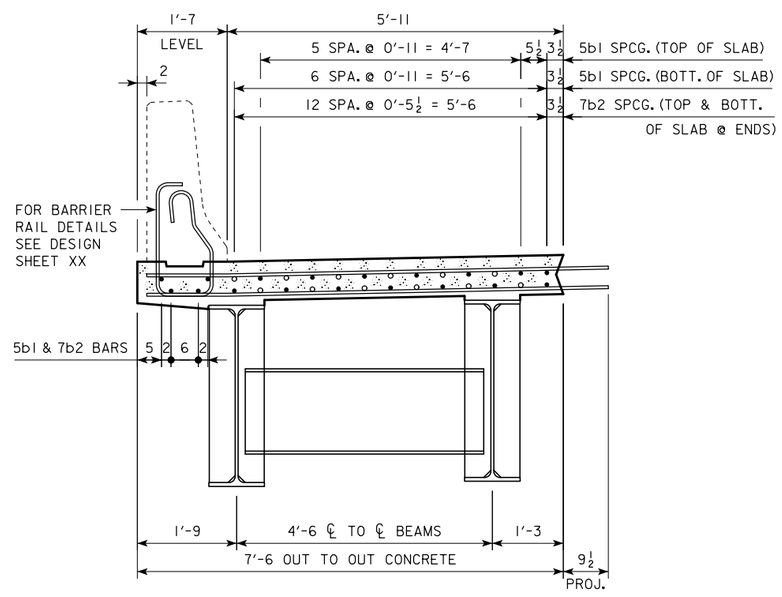

SECTION A-A

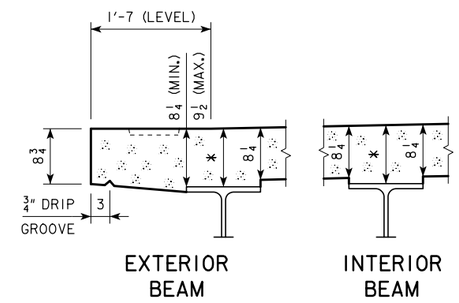

TYP. SLAB AND HAUNCH DETAIL

* FOR SLAB THICKNESS OVER BEAMS SEE HAUNCH AND CAMBER DETAILS ON DESIGN SHEET XX.

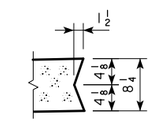

LONGIT. & TRANSV. JOINT KEY DETAIL

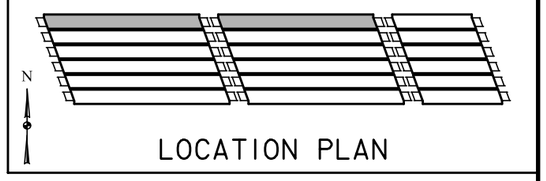

LOCATION PLAN

DESIGN FOR 20° SKEW (R.A.)

234'-0 x 44'-0 ROLLED STEEL BEAM BRIDGE

91'-0 & 51'-0 END SPANS — 92'-0 INTERIOR SPAN

M90-A EXTERIOR MODULE DETAILS

STA. 528+80.00 IA 92 — ?, 2004

POTTAWATTAMIE COUNTY

IOWA DEPARTMENT OF TRANSPORTATION - HIGHWAY DIVISION

DESIGN SHEET NO. 38 OF ? FILE NO. 30846 DESIGN NO. 115

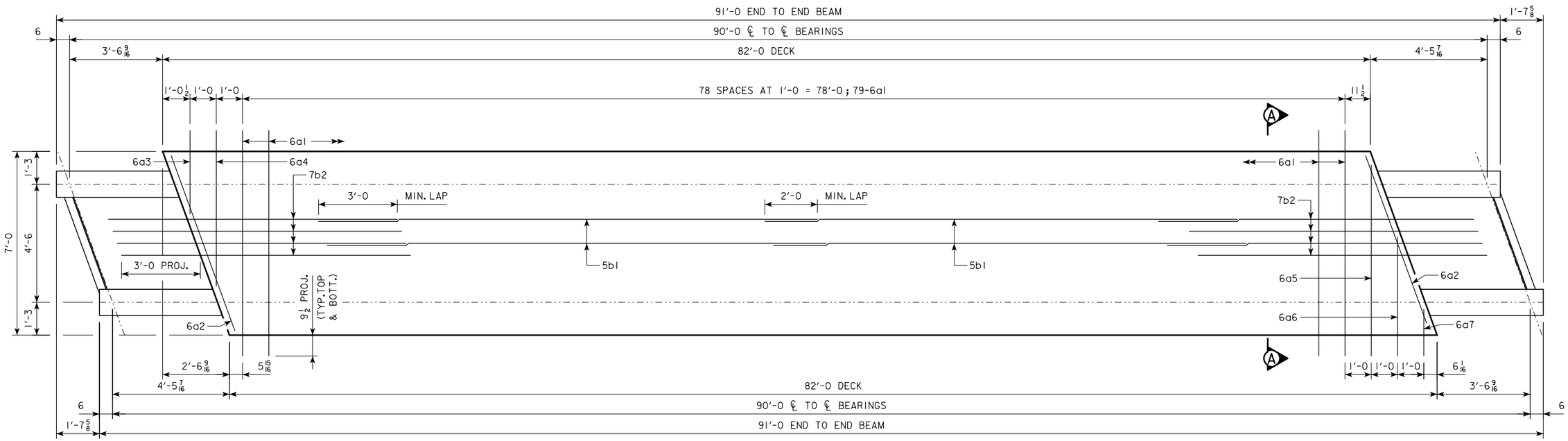

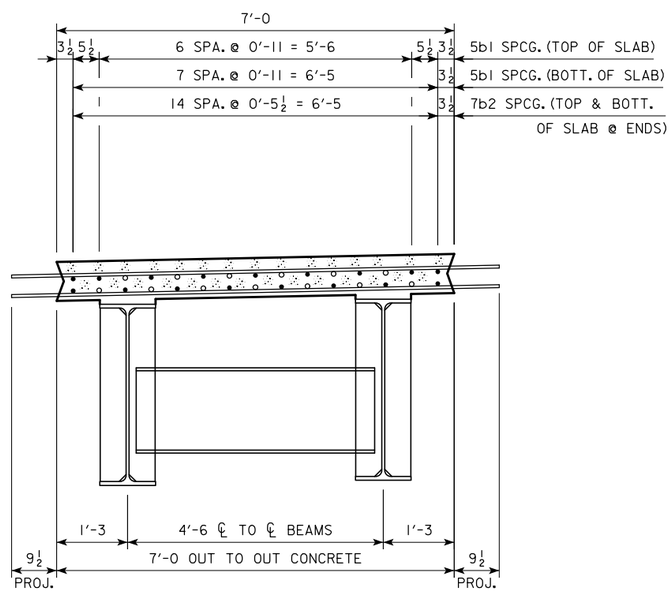

SECTION A-A

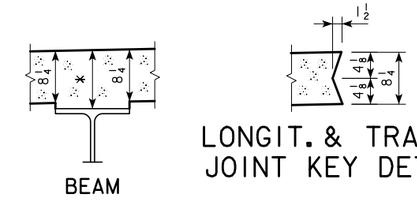

LONGIT. & TRANSV. JOINT KEY DETAIL

TYP. SLAB AND HAUNCH DETAIL

* FOR SLAB THICKNESS OVER BEAMS SEE HAUNCH AND CAMBER DETAILS ON DESIGN SHEET XX.

REINF. STEEL, STAINLESS - (1) MODULE

BAR	LOCATION	SHAPE	NO.	LENGTH	WEIGHT
6a1	TRANSVERSE	——	158	8'-7	2,037
6a2	TRANSVERSE, SKEWED, DECK ENDS	——	4	7'-1	43
6a3	TRANSVERSE, DECK END	——	2	3'-2	10
6a4	TRANSVERSE, DECK END	——	2	5'-11	18
6a5	TRANSVERSE, DECK END	——	2	7'-3	22
6a6	TRANSVERSE, DECK END	——	2	4'-6	14
6a7	TRANSVERSE, DECK END	——	2	1'-9	5
5b1	LONGITUDINAL	——	34	36'-6	1,294
7b2	LONGITUDINAL, DECK ENDS	——	60	12'-0	1,472
				TOTAL (LBS.)	4,915

HIGH PERF. CONC. - 1 MODULE

LOCATION	QTY. (CY)
DECK	14.9
TOTAL (CY)	14.9

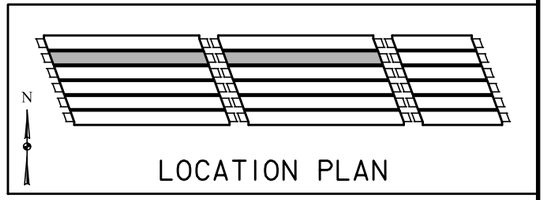

LOCATION PLAN

DESIGN FOR 20° SKEW (R.A.)

234'-0 x 44'-0 ROLLED STEEL BEAM BRIDGE

91'-0 & 51'-0 END SPANS 92'-0 INTERIOR SPAN

M90-B INTERIOR MODULE DETAILS

STA. 528+80.00 IA 92 ?, 2004

POTTAWATTAMIE COUNTY

IOWA DEPARTMENT OF TRANSPORTATION - HIGHWAY DIVISION

DESIGN SHEET NO. 39 OF ? FILE NO. 30846 DESIGN NO. 115

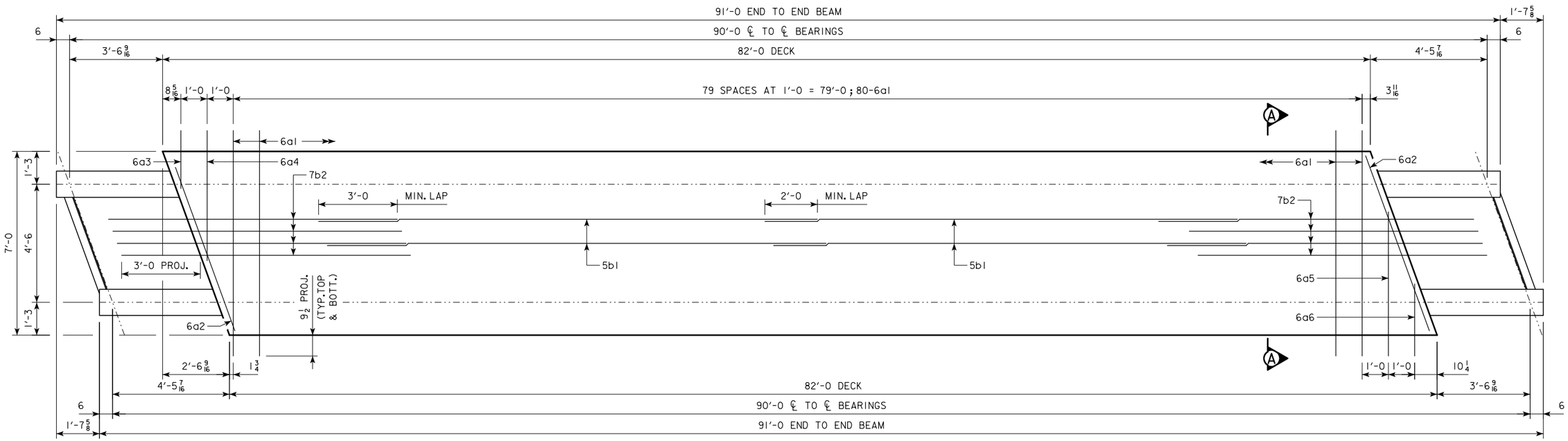

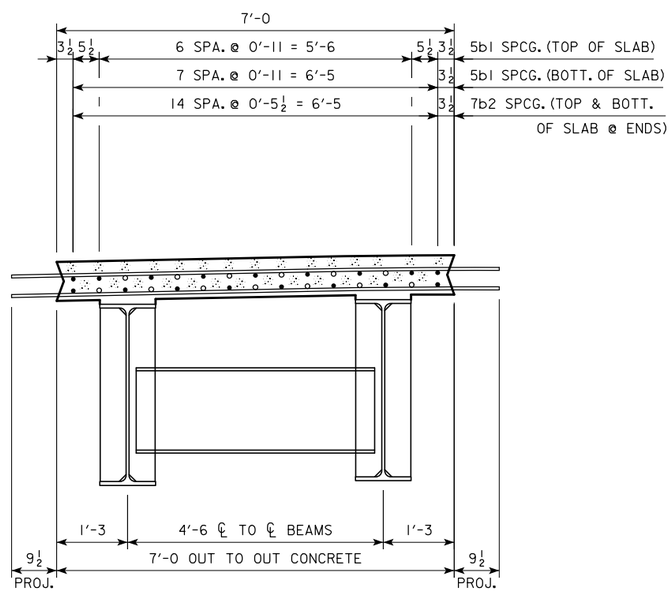

SECTION A-A

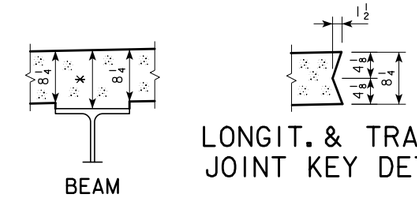

TYP. SLAB AND HAUNCH DETAIL

* FOR SLAB THICKNESS OVER BEAMS SEE HAUNCH AND CAMBER DETAILS ON DESIGN SHEET XX.

REINF. STEEL, STAINLESS - (1) MODULE

BAR	LOCATION	SHAPE	NO.	LENGTH	WEIGHT
6a1	TRANSVERSE	——	160	8'-7	2,063
6a2	TRANSVERSE, SKEWED, DECK ENDS	——	4	7'-1	43
6a3	TRANSVERSE, DECK END	——	2	2'-2	7
6a4	TRANSVERSE, DECK END	——	2	4'-11	15
6a5	TRANSVERSE, DECK END	——	2	5'-6	17
6a6	TRANSVERSE, DECK END	——	2	2'-9	8
5b1	LONGITUDINAL	——	34	36'-6	1,294
7b2	LONGITUDINAL, DECK ENDS	——	60	12'-0	1,472
				TOTAL (LBS.)	4,919

HIGH PERF. CONC. - 1 MODULE

LOCATION	QTY. (CY)
DECK	14.9
TOTAL (CY)	14.9

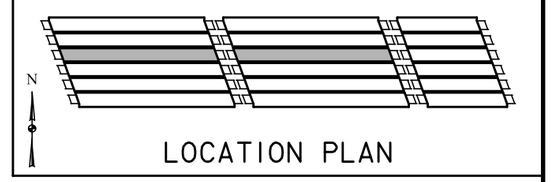

LOCATION PLAN

DESIGN FOR 20° SKEW (R.A.)

234'-0 x 44'-0 ROLLED STEEL BEAM BRIDGE

91'-0 & 51'-0 END SPANS 92'-0 INTERIOR SPAN

M90-C INTERIOR MODULE DETAILS

STA. 528+80.00 IA 92 ?, 2004

POTTAWATTAMIE COUNTY

IOWA DEPARTMENT OF TRANSPORTATION - HIGHWAY DIVISION

DESIGN SHEET NO. 40 OF ? FILE NO. 30846 DESIGN NO. 115

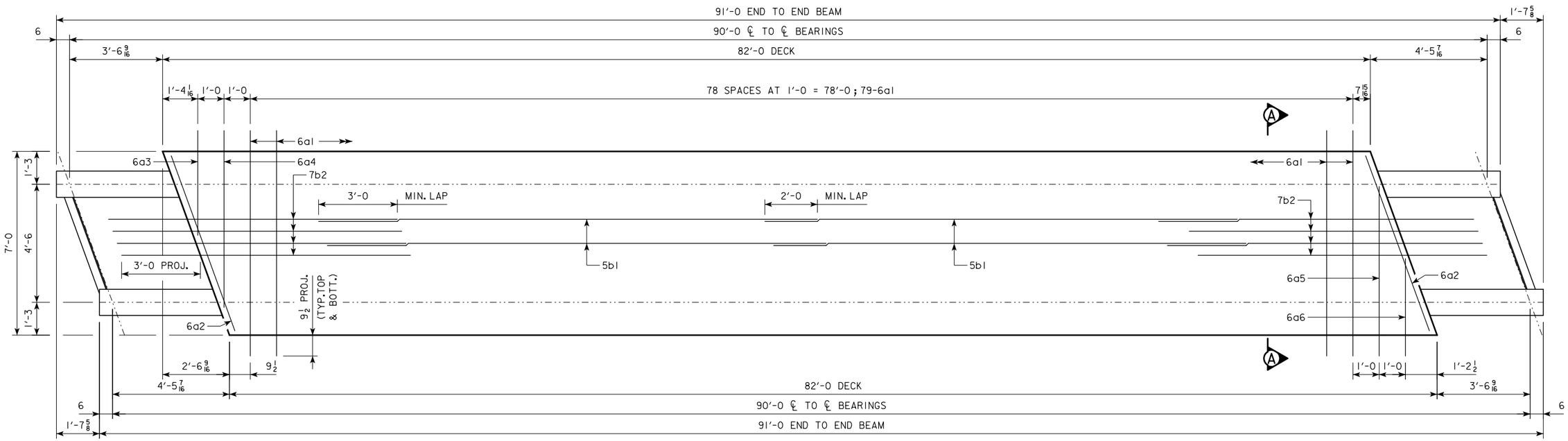

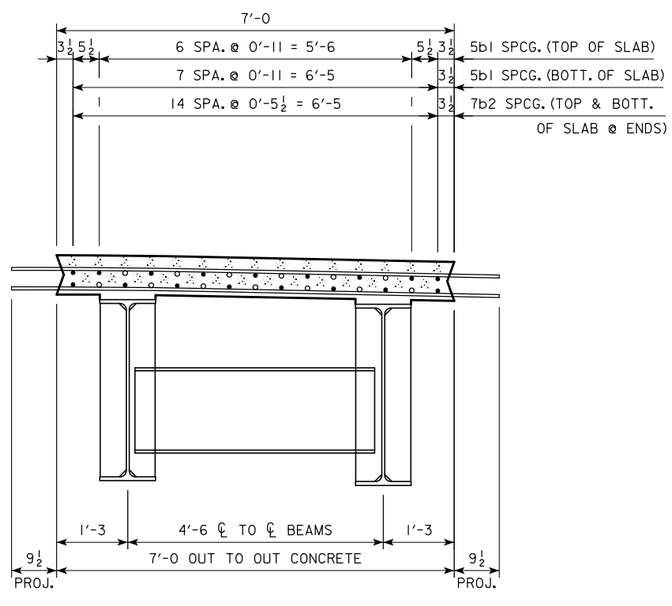

SECTION A-A

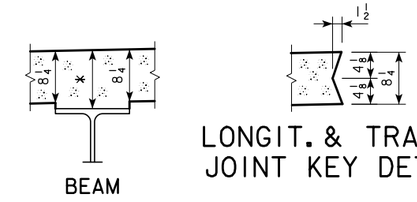

TYP. SLAB AND HAUNCH DETAIL

* FOR SLAB THICKNESS OVER BEAMS SEE HAUNCH AND CAMBER DETAILS ON DESIGN SHEET XX.

REINF. STEEL, STAINLESS - (1) MODULE

BAR	LOCATION	SHAPE	NO.	LENGTH	WEIGHT
6a1	TRANSVERSE	——	158	8'-7	2,037
6a2	TRANSVERSE, SKEWED, DECK ENDS	——	4	7'-1	43
6a3	TRANSVERSE, DECK END	——	2	4'-0	12
6a4	TRANSVERSE, DECK END	——	2	6'-9	20
6a5	TRANSVERSE, DECK END	——	2	6'-6	20
6a6	TRANSVERSE, DECK END	——	2	3'-9	11
5b1	LONGITUDINAL	——	34	36'-6	1,294
7b2	LONGITUDINAL, DECK ENDS	——	60	12'-0	1,472
				TOTAL (LBS.)	4,909

HIGH PERF. CONC. - 1 MODULE

LOCATION	QTY. (CY)
DECK	14.9
TOTAL (CY)	14.9

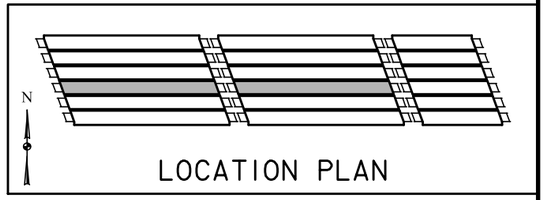

LOCATION PLAN

DESIGN FOR 20° SKEW (R.A.)

234'-0 x 44'-0 ROLLED STEEL BEAM BRIDGE

91'-0 & 51'-0 END SPANS 92'-0 INTERIOR SPAN

M90-D INTERIOR MODULE DETAILS

STA. 528+80.00 IA 92 ?, 2004

POTTAWATTAMIE COUNTY

IOWA DEPARTMENT OF TRANSPORTATION - HIGHWAY DIVISION

DESIGN SHEET NO. 41 OF ? FILE NO. 30846 DESIGN NO. 115

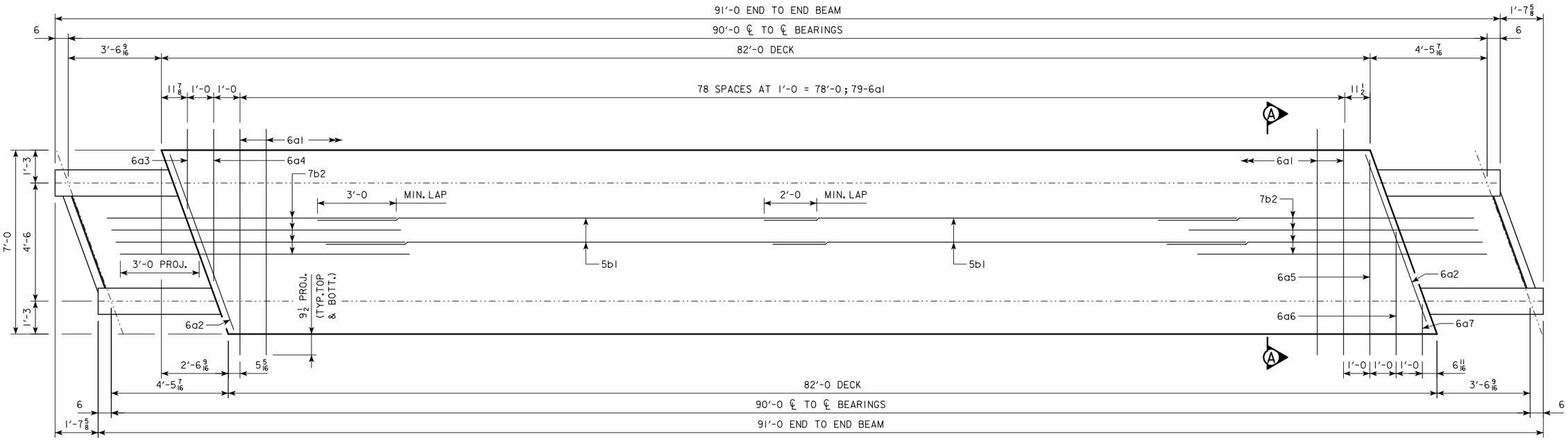

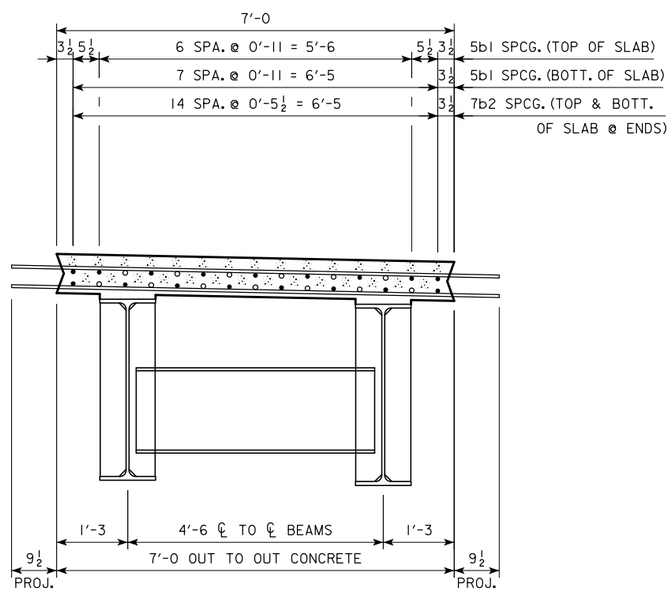

SECTION A-A

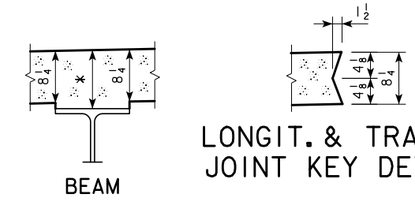

LONGIT. & TRANSV. JOINT KEY DETAIL

TYP. SLAB AND HAUNCH DETAIL

* FOR SLAB THICKNESS OVER BEAMS SEE HAUNCH AND CAMBER DETAILS ON DESIGN SHEET XX.

REINF. STEEL, STAINLESS - (1) MODULE

BAR	LOCATION	SHAPE	NO.	LENGTH	WEIGHT
6a1	TRANSVERSE	——	158	8'-7	2,037
6a2	TRANSVERSE, SKEWED, DECK ENDS	——	4	7'-1	43
6a3	TRANSVERSE, DECK END	——	2	3'-0	9
6a4	TRANSVERSE, DECK END	——	2	5'-9	17
6a5	TRANSVERSE, DECK END	——	2	7'-5	22
6a6	TRANSVERSE, DECK END	——	2	4'-8	14
6a7	TRANSVERSE, DECK END	——	2	1'-11	6
5b1	LONGITUDINAL	——	34	36'-6	1,294
7b2	LONGITUDINAL, DECK ENDS	——	60	12'-0	1,472
				TOTAL (LBS.)	4,914

HIGH PERF. CONC. - 1 MODULE

LOCATION	QTY. (CY)
DECK	14.9
TOTAL (CY)	14.9

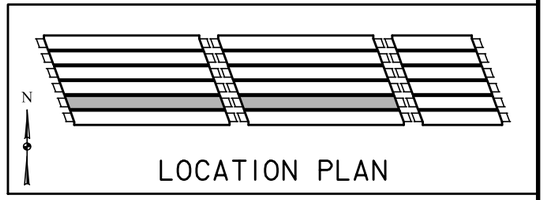

LOCATION PLAN

DESIGN FOR 20° SKEW (R.A.)

234'-0 x 44'-0 ROLLED STEEL BEAM BRIDGE

91'-0 & 51'-0 END SPANS 92'-0 INTERIOR SPAN

M90-E INTERIOR MODULE DETAILS

STA. 528+80.00 IA 92 ?, 2004

POTTAWATTAMIE COUNTY

IOWA DEPARTMENT OF TRANSPORTATION - HIGHWAY DIVISION

DESIGN SHEET NO. 42 OF ? FILE NO. 30846 DESIGN NO. 115

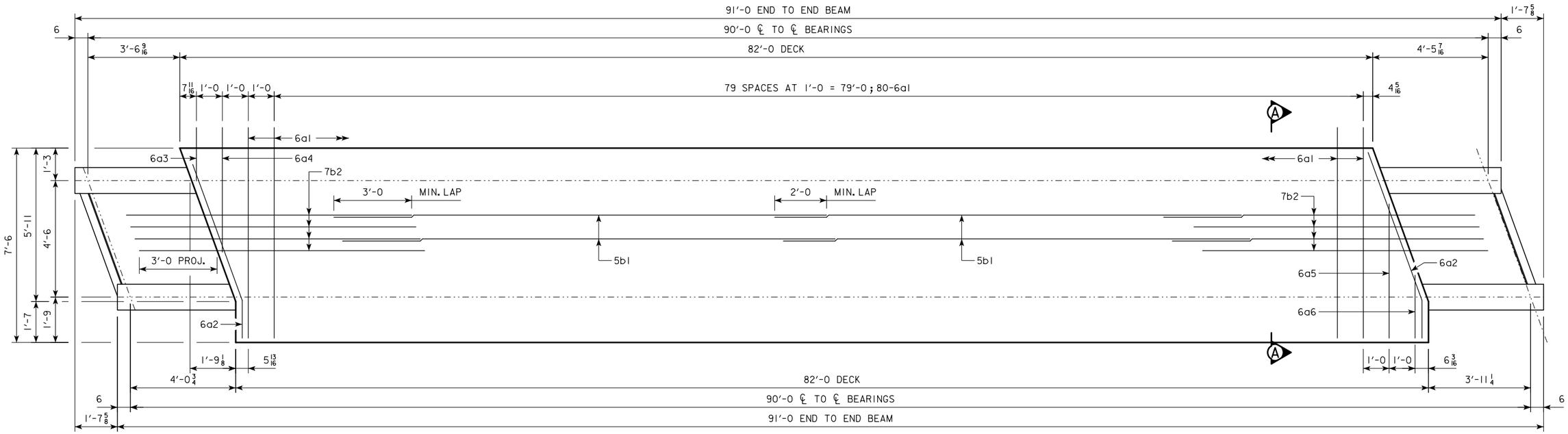

REINF. STEEL, STAINLESS - (1) MODULE

BAR	LOCATION	SHAPE	NO.	LENGTH	WEIGHT
6a1	TRANSVERSE	——	160	8'-2	1,938
6a2	TRANSVERSE, SKEWED, DECK ENDS	——	4	7'-6	45
6a3	TRANSVERSE, DECK END	——	2	2'-1	6
6a4	TRANSVERSE, DECK END	——	2	4'-10	15
6a5	TRANSVERSE, DECK END	——	2	5'-2	16
6a6	TRANSVERSE, DECK END	——	2	2'-5	7
5b1	LONGITUDINAL	——	34	36'-6	1,294
7b2	LONGITUDINAL, DECK ENDS	——	60	12'-0	1,472
			TOTAL (LBS.)		4,818

BENT BAR DETAILS

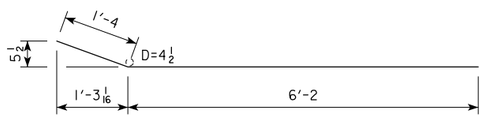

NOTE: ALL DIMENSIONS ARE OUT TO OUT. D = PIN DIA.

HIGH PERF. CONC. - 1 MODULE

LOCATION	QTY. (CY)
DECK	16.4
TOTAL (CY)	16.4

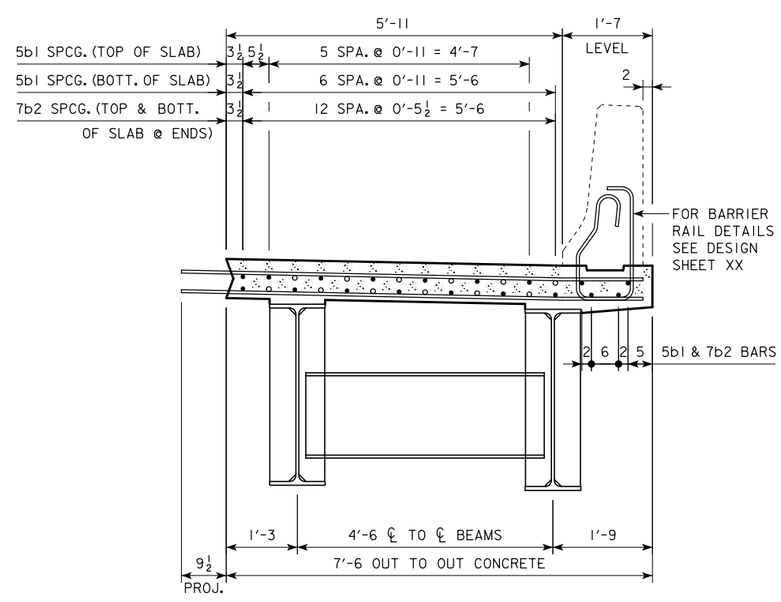

SECTION A-A

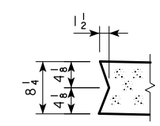

LONGIT. & TRANSV. JOINT KEY DETAIL

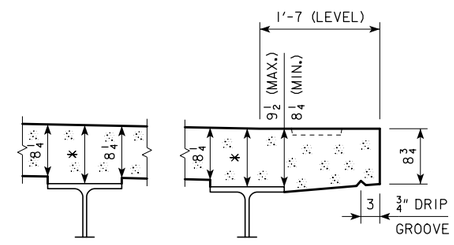

TYP. SLAB AND HAUNCH DETAIL

* FOR SLAB THICKNESS OVER BEAMS SEE HAUNCH AND CAMBER DETAILS ON DESIGN SHEET XX.

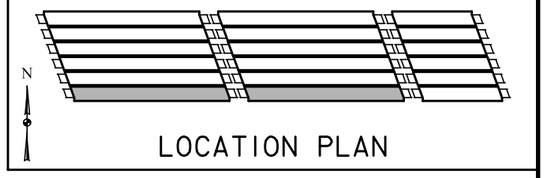

LOCATION PLAN

DESIGN FOR 20° SKEW (R.A.)

234'-0 x 44'-0 ROLLED STEEL BEAM BRIDGE

91'-0 & 51'-0 END SPANS — 92'-0 INTERIOR SPAN

M90-F EXTERIOR MODULE DETAILS

STA. 528+80.00 IA 92 — ?, 2004

POTTAWATTAMIE COUNTY

IOWA DEPARTMENT OF TRANSPORTATION - HIGHWAY DIVISION

DESIGN SHEET NO. 43 OF ? FILE NO. 30846 DESIGN NO. 115

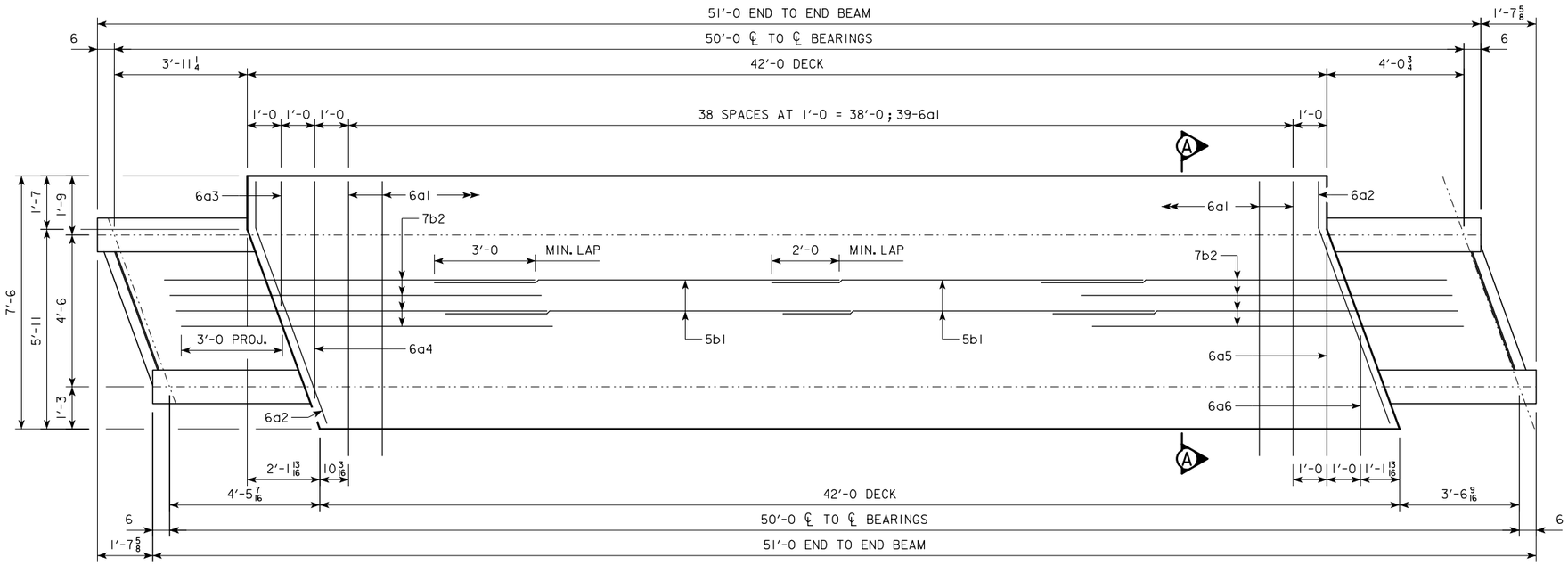

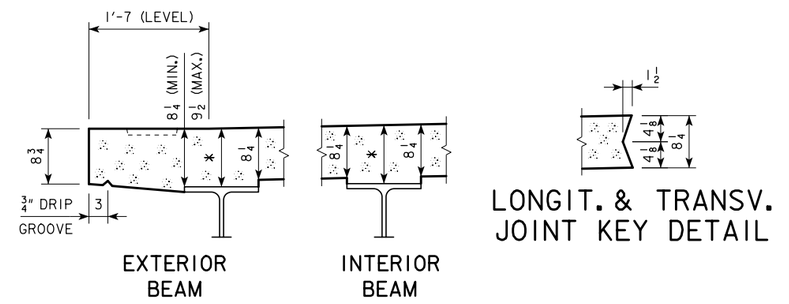

TYP. SLAB AND HAUNCH DETAIL

* FOR SLAB THICKNESS OVER BEAMS SEE HAUNCH AND CAMBER DETAILS ON DESIGN SHEET XX.

REINF. STEEL, STAINLESS - (1) MODULE

BAR	LOCATION	SHAPE	NO.	LENGTH	WEIGHT
6a1	TRANSVERSE		78	8'-2	957
6a2	TRANSVERSE, SKEWED, DECK ENDS		4	7'-6	45
6a3	TRANSVERSE, DECK END		2	3'-8	11
6a4	TRANSVERSE, DECK END		2	6'-5	19
6a5	TRANSVERSE, DECK END		2	6'-4	19
6a6	TRANSVERSE, DECK END		2	3'-7	11
5b1	LONGITUDINAL		34	16'-6	585
7b2	LONGITUDINAL, DECK ENDS		60	12'-0	1,472
			TOTAL (LBS.)		3,119

BENT BAR DETAILS

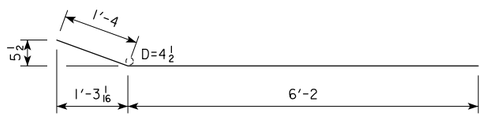

NOTE: ALL DIMENSIONS ARE OUT TO OUT. D = PIN DIA.

HIGH PERF. CONC. - 1 MODULE

LOCATION	QTY. (CY)
DECK	8.4
TOTAL (CY)	8.4

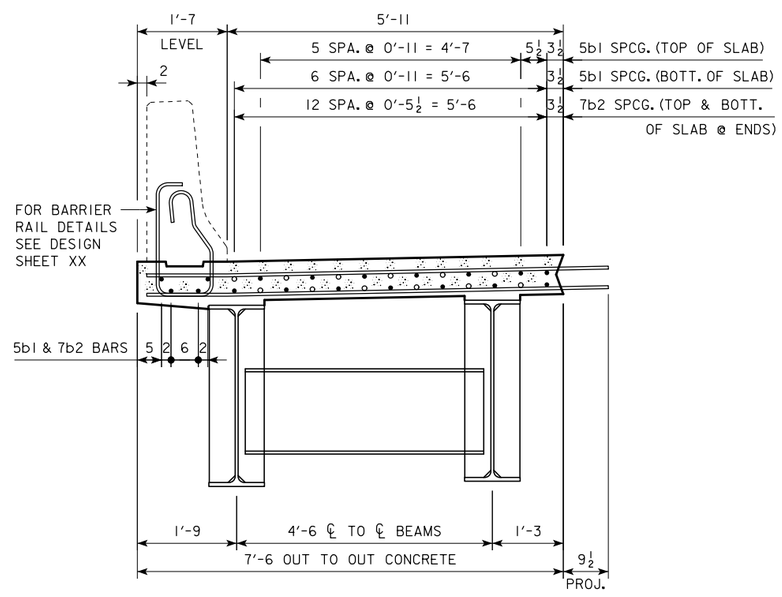

SECTION A-A

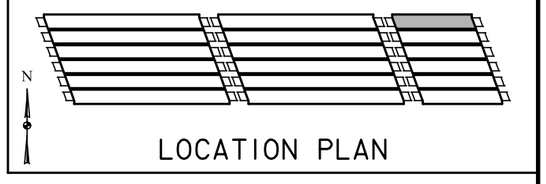

LOCATION PLAN

DESIGN FOR 20° SKEW (R.A.)

234'-0 x 44'-0 ROLLED STEEL BEAM BRIDGE

91'-0 & 51'-0 END SPANS 92'-0 INTERIOR SPAN

M50-A EXTERIOR MODULE DETAILS

STA. 528+80.00 IA 92 ?, 2004

POTTAWATTAMIE COUNTY

IOWA DEPARTMENT OF TRANSPORTATION - HIGHWAY DIVISION

DESIGN SHEET NO. 44 OF ? FILE NO. 30846 DESIGN NO. 115

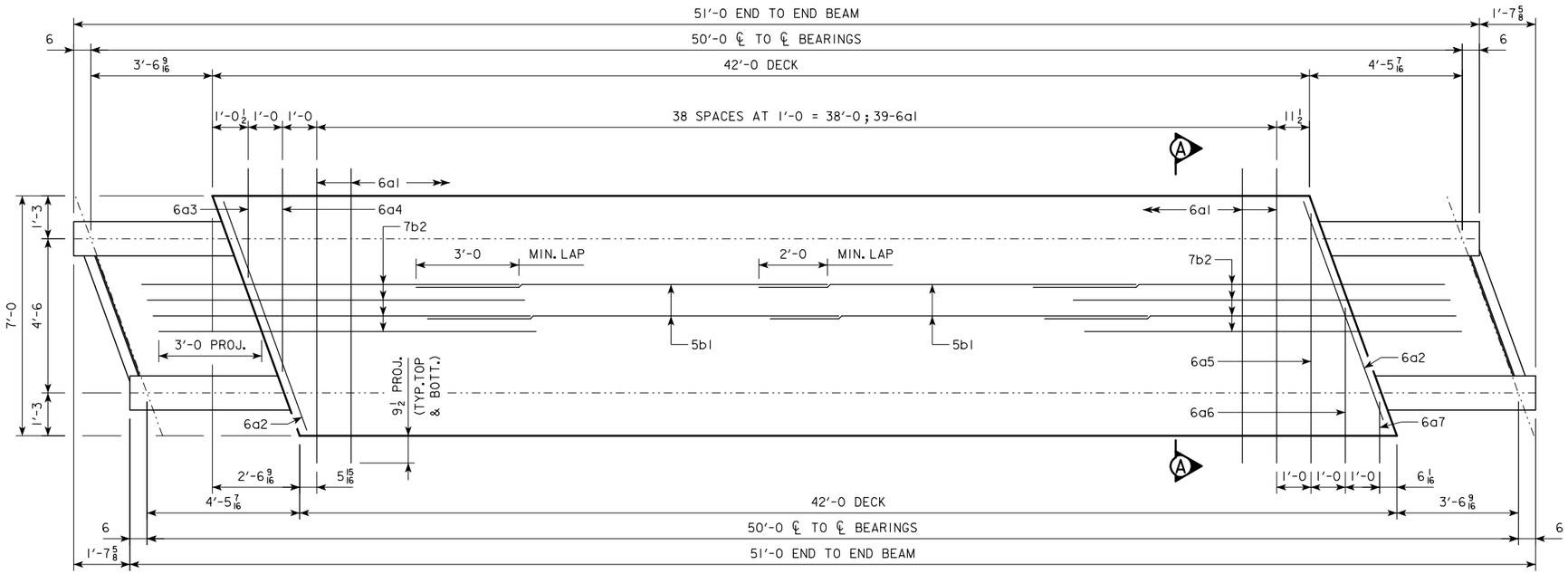

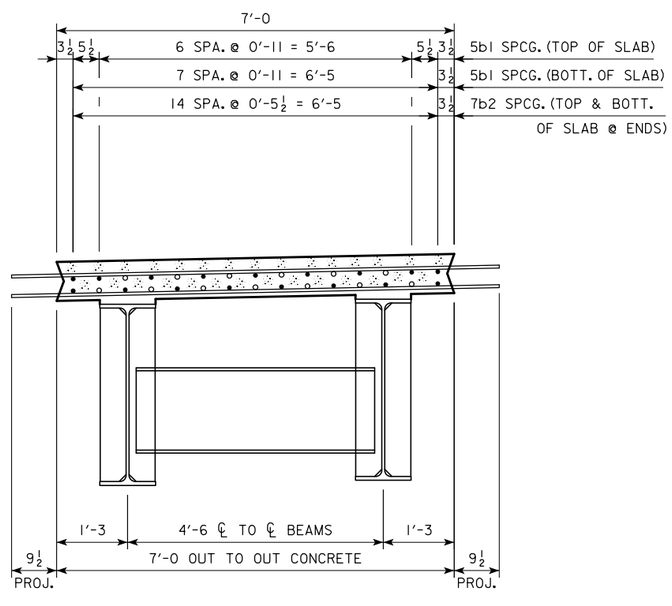

SECTION A-A

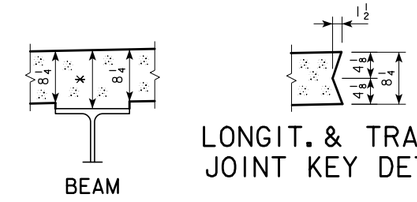

TYP. SLAB AND HAUNCH DETAIL

* FOR SLAB THICKNESS OVER BEAMS SEE HAUNCH AND CAMBER DETAILS ON DESIGN SHEET XX.

REINF. STEEL, STAINLESS - (1) MODULE

BAR	LOCATION	SHAPE	NO.	LENGTH	WEIGHT
6a1	TRANSVERSE	——	78	8'-7	1,006
6a2	TRANSVERSE, SKEWED, DECK ENDS	——	4	7'-1	43
6a3	TRANSVERSE, DECK END	——	2	3'-2	10
6a4	TRANSVERSE, DECK END	——	2	5'-11	18
6a5	TRANSVERSE, DECK END	——	2	7'-3	22
6a6	TRANSVERSE, DECK END	——	2	4'-6	14
6a7	TRANSVERSE, DECK END	——	2	1'-9	5
5b1	LONGITUDINAL	——	34	16'-6	585
7b2	LONGITUDINAL, DECK ENDS	——	60	12'-0	1,472
				TOTAL (LBS.)	3,175

HIGH PERF. CONC. - 1 MODULE

LOCATION	QTY. (CY)
DECK	7.6
TOTAL (CY)	7.6

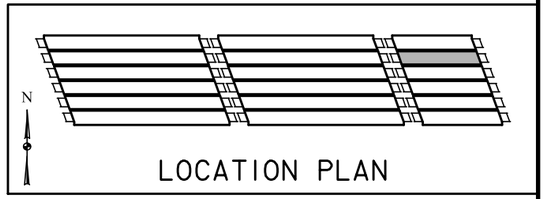

LOCATION PLAN

DESIGN FOR 20° SKEW (R.A.)

234'-0 x 44'-0 ROLLED STEEL BEAM BRIDGE

91'-0 & 51'-0 END SPANS 92'-0 INTERIOR SPAN

M50-B INTERIOR MODULE DETAILS

STA. 528+80.00 IA 92 ?, 2004

POTTAWATTAMIE COUNTY

IOWA DEPARTMENT OF TRANSPORTATION - HIGHWAY DIVISION

DESIGN SHEET NO. 45 OF ? FILE NO. 30846 DESIGN NO. 115

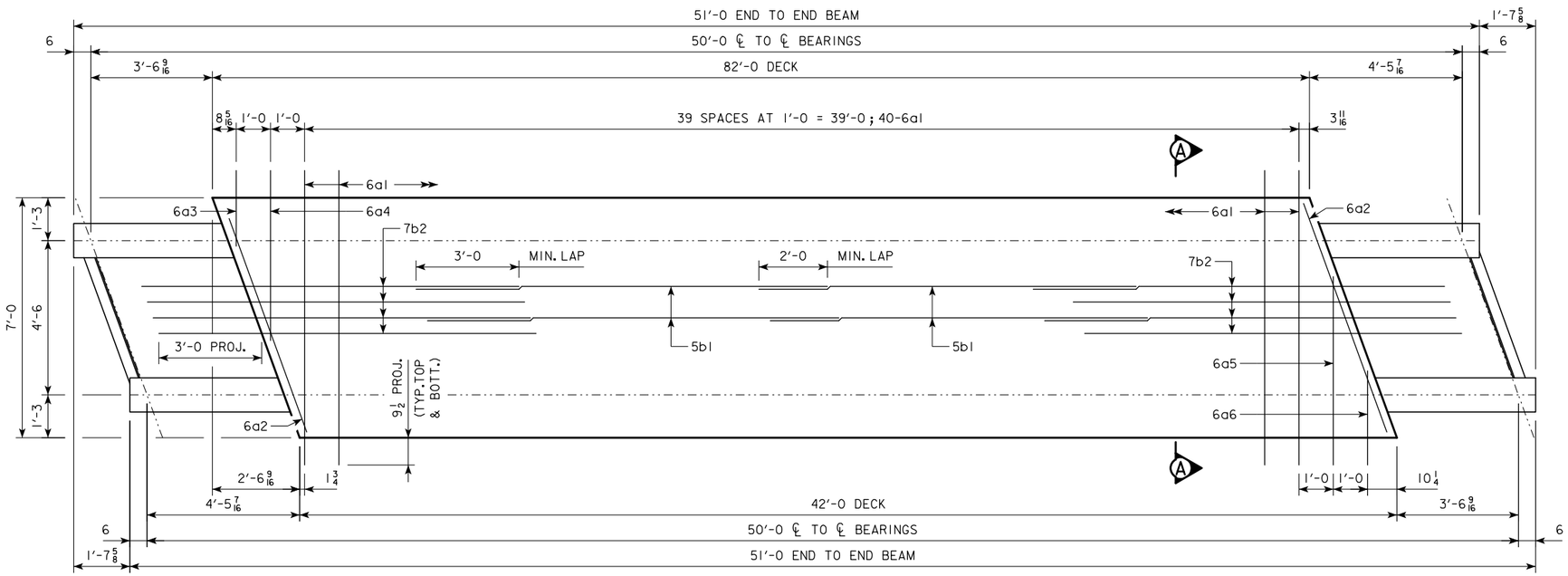

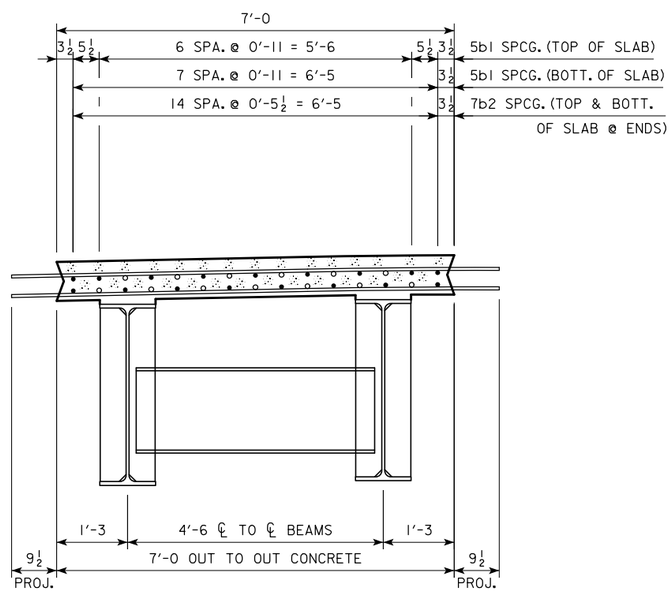

SECTION A-A

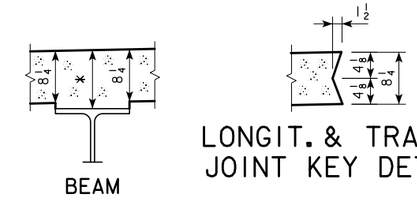

TYP. SLAB AND HAUNCH DETAIL

* FOR SLAB THICKNESS OVER BEAMS SEE HAUNCH AND CAMBER DETAILS ON DESIGN SHEET XX.

REINF. STEEL, STAINLESS - (1) MODULE

BAR	LOCATION	SHAPE	NO.	LENGTH	WEIGHT
6a1	TRANSVERSE	——	80	8'-7	1,031
6a2	TRANSVERSE, SKEWED, DECK ENDS	——	4	7'-1	43
6a3	TRANSVERSE, DECK END	——	2	2'-2	7
6a4	TRANSVERSE, DECK END	——	2	4'-11	15
6a5	TRANSVERSE, DECK END	——	2	5'-6	17
6a6	TRANSVERSE, DECK END	——	2	2'-9	8
5b1	LONGITUDINAL	——	34	16'-6	585
7b2	LONGITUDINAL, DECK ENDS	——	60	12'-0	1,472
				TOTAL (LBS.)	3,178

HIGH PERF. CONC. - 1 MODULE

LOCATION	QTY. (CY)
DECK	7.6
TOTAL (CY)	7.6

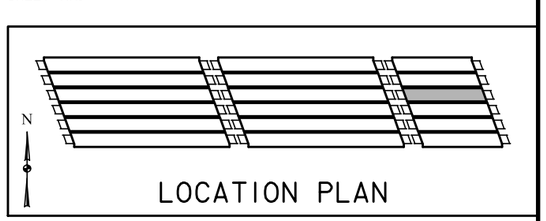

LOCATION PLAN

DESIGN FOR 20° SKEW (R.A.)

234'-0 x 44'-0 ROLLED STEEL BEAM BRIDGE

91'-0 & 51'-0 END SPANS 92'-0 INTERIOR SPAN

M50-C INTERIOR MODULE DETAILS

STA. 528+80.00 IA 92 ?, 2004

POTTAWATTAMIE COUNTY

IOWA DEPARTMENT OF TRANSPORTATION - HIGHWAY DIVISION

DESIGN SHEET NO. 46 OF ? FILE NO. 30846 DESIGN NO. 115

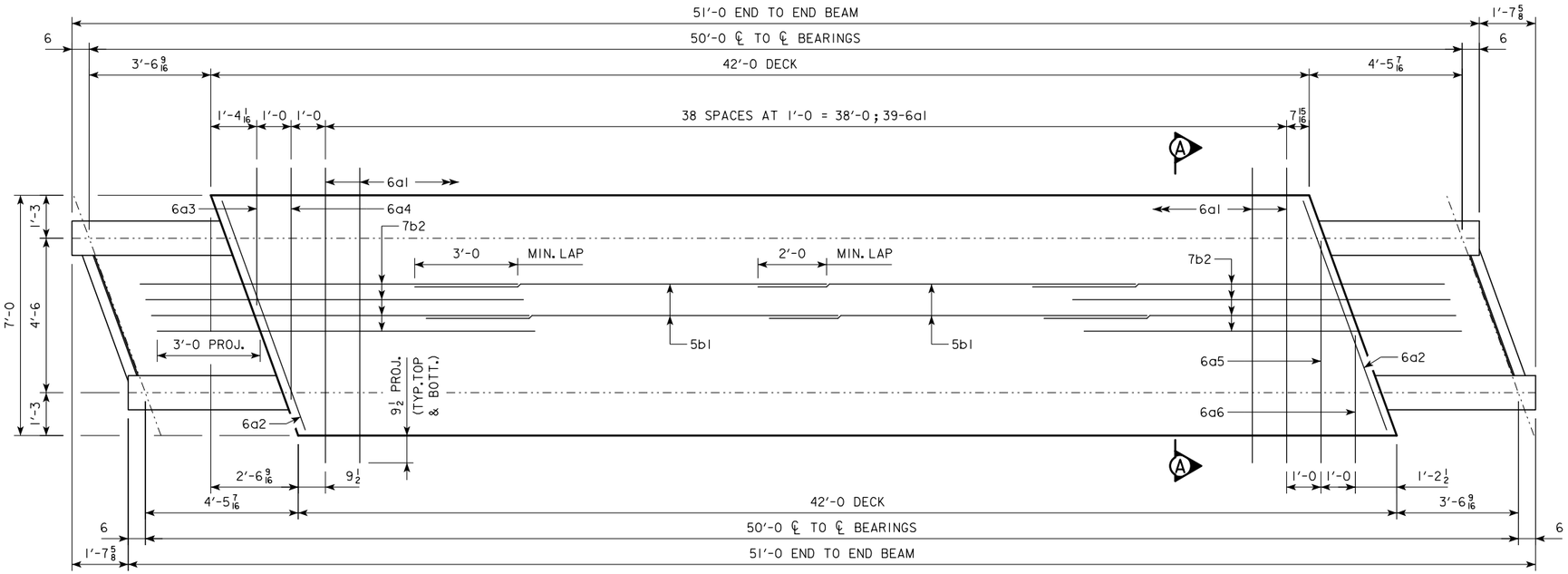

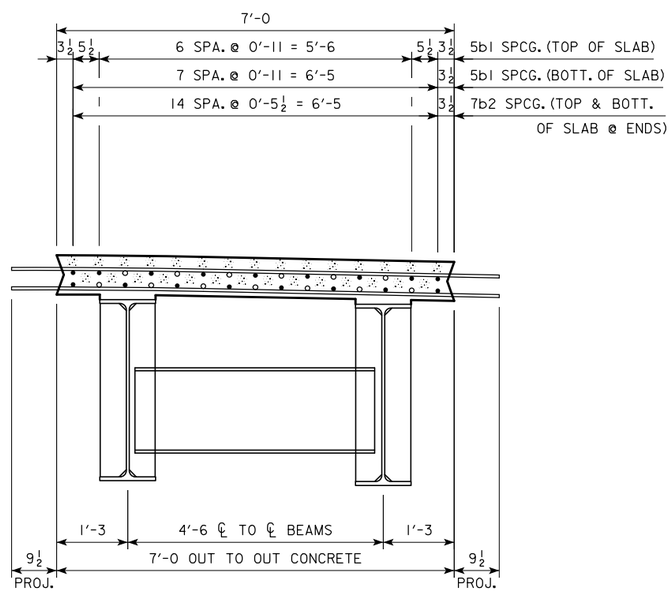

SECTION A-A

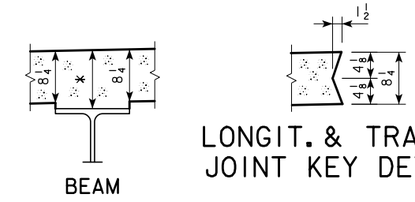

LONGIT. & TRANSV. JOINT KEY DETAIL

TYP. SLAB AND HAUNCH DETAIL

* FOR SLAB THICKNESS OVER BEAMS SEE HAUNCH AND CAMBER DETAILS ON DESIGN SHEET XX.

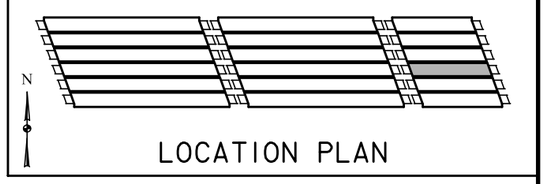

LOCATION PLAN

REINF. STEEL, STAINLESS - (1) MODULE

BAR	LOCATION	SHAPE	NO.	LENGTH	WEIGHT
6a1	TRANSVERSE	——	78	8'-7	1,006
6a2	TRANSVERSE, SKEWED, DECK ENDS	——	4	7'-1	43
6a3	TRANSVERSE, DECK END	——	2	4'-0	12
6a4	TRANSVERSE, DECK END	——	2	6'-9	20
6a5	TRANSVERSE, DECK END	——	2	6'-6	20
6a6	TRANSVERSE, DECK END	——	2	3'-9	11
5b1	LONGITUDINAL	——	34	16'-6	585
7b2	LONGITUDINAL, DECK ENDS	——	60	12'-0	1,472
				TOTAL (LBS.)	3,169

HIGH PERF. CONC. - 1 MODULE

LOCATION	QTY. (CY)
DECK	7.6
TOTAL (CY)	7.6

DESIGN FOR 20° SKEW (R.A.)

234'-0 x 44'-0 ROLLED STEEL BEAM BRIDGE

91'-0 & 51'-0 END SPANS 92'-0 INTERIOR SPAN

M50-D INTERIOR MODULE DETAILS

STA. 528+80.00 IA 92 ?, 2004

POTTAWATTAMIE COUNTY

IOWA DEPARTMENT OF TRANSPORTATION - HIGHWAY DIVISION

DESIGN SHEET NO. 47 OF ? FILE NO. 30846 DESIGN NO. 115

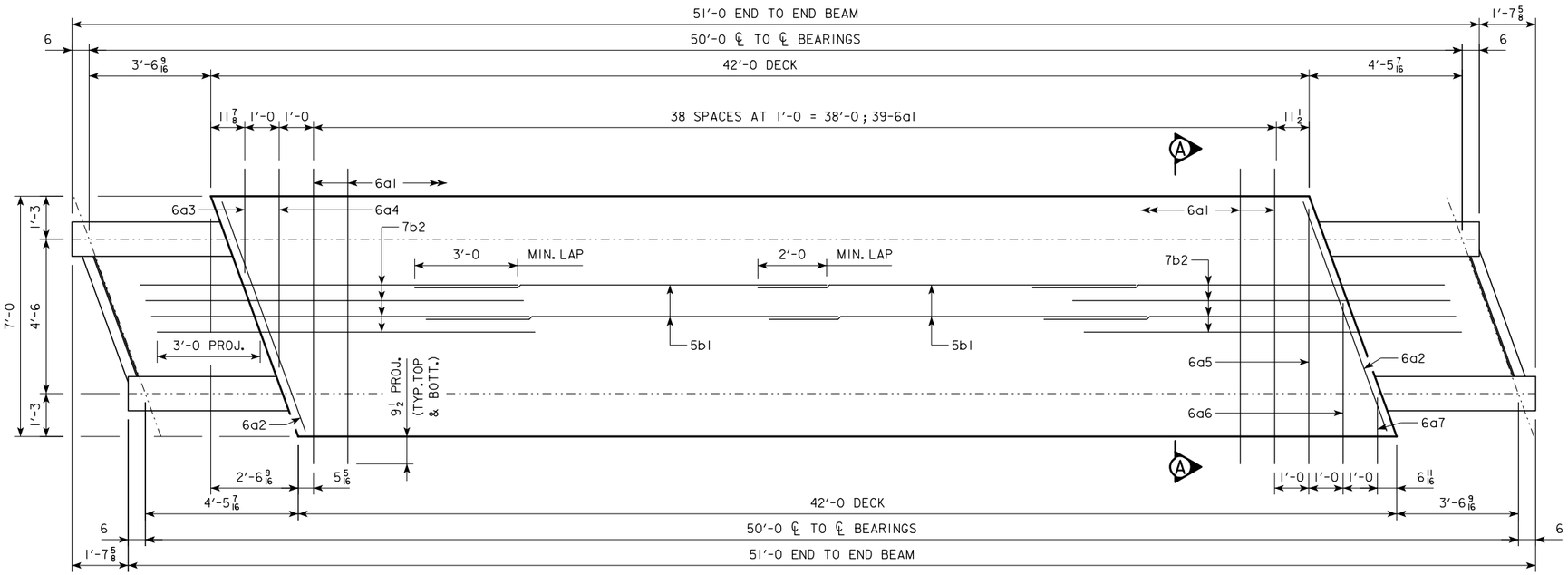

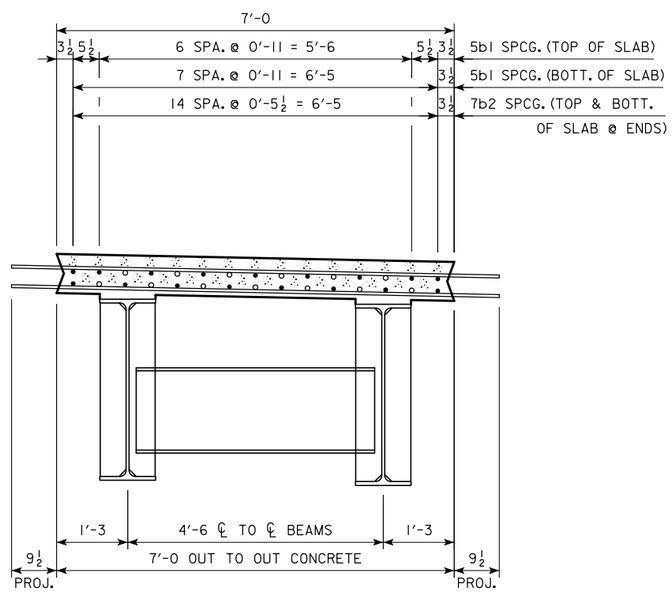

SECTION A-A

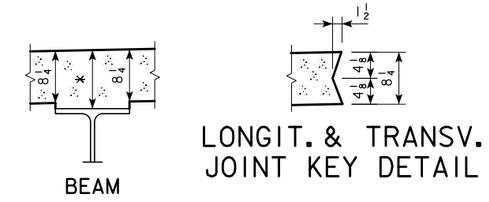

TYP. SLAB AND HAUNCH DETAIL

* FOR SLAB THICKNESS OVER BEAMS SEE HAUNCH AND CAMBER DETAILS ON DESIGN SHEET XX.

REINF. STEEL, STAINLESS - (1) MODULE

BAR	LOCATION	SHAPE	NO.	LENGTH	WEIGHT
6a1	TRANSVERSE	——	78	8'-7	1,006
6a2	TRANSVERSE, SKEWED, DECK ENDS	——	4	7'-1	43
6a3	TRANSVERSE, DECK END	——	2	3'-0	9
6a4	TRANSVERSE, DECK END	——	2	5'-9	17
6a5	TRANSVERSE, DECK END	——	2	7'-5	22
6a6	TRANSVERSE, DECK END	——	2	4'-8	14
6a7	TRANSVERSE, DECK END	——	2	1'-11	6
5b1	LONGITUDINAL	——	34	16'-6	585
7b2	LONGITUDINAL, DECK ENDS	——	60	12'-0	1,472
				TOTAL (LBS.)	3,174

HIGH PERF. CONC. - 1 MODULE

LOCATION	QTY. (CY)
DECK	7.6
TOTAL (CY)	7.6

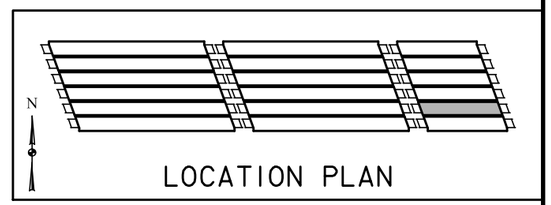

LOCATION PLAN

DESIGN FOR 20° SKEW (R.A.)

234'-0 x 44'-0 ROLLED STEEL BEAM BRIDGE

91'-0 & 51'-0 END SPANS 92'-0 INTERIOR SPAN

M50-E INTERIOR MODULE DETAILS

STA. 528+80.00 IA 92 ?, 2004

POTTAWATTAMIE COUNTY

IOWA DEPARTMENT OF TRANSPORTATION - HIGHWAY DIVISION

DESIGN SHEET NO. 48 OF ? FILE NO. 30846 DESIGN NO. 115

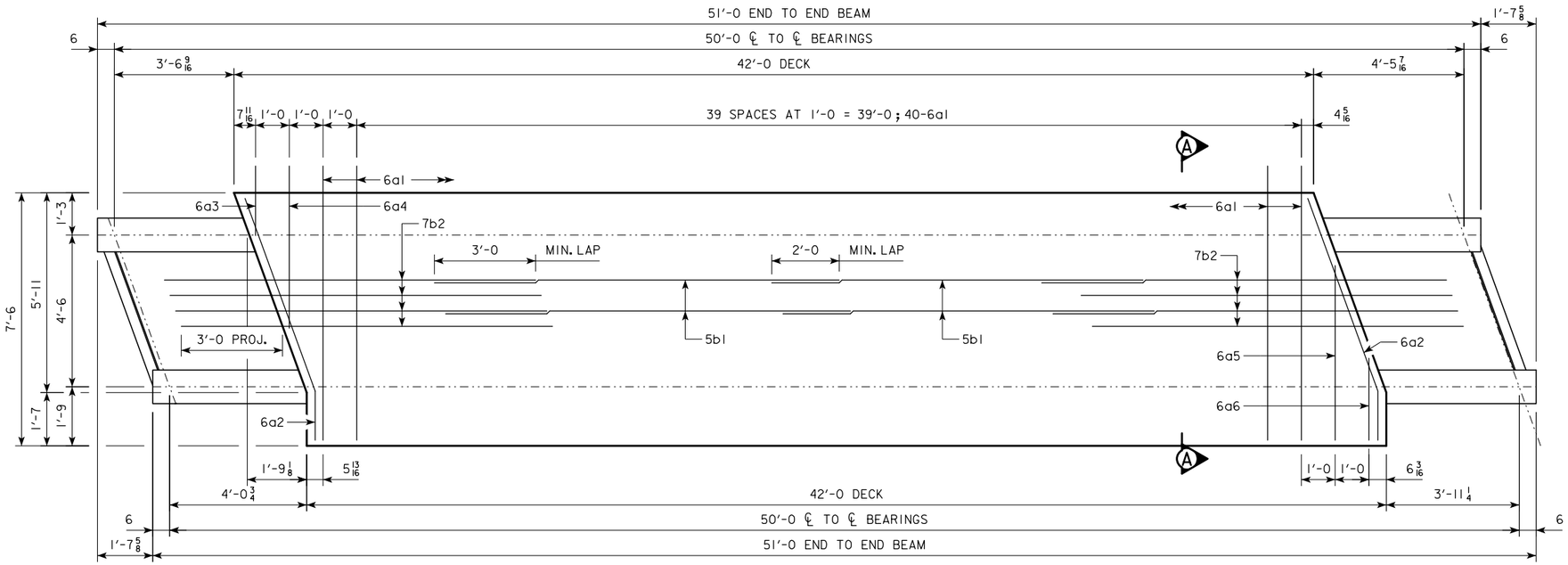

REINF. STEEL, STAINLESS - (1) MODULE

BAR	LOCATION	SHAPE	NO.	LENGTH	WEIGHT
6a1	TRANSVERSE	——	80	8'-2	981
6a2	TRANSVERSE, SKEWED, DECK ENDS	——	4	7'-6	45
6a3	TRANSVERSE, DECK END	——	2	2'-1	6
6a4	TRANSVERSE, DECK END	——	2	4'-10	15
6a5	TRANSVERSE, DECK END	——	2	5'-2	16
6a6	TRANSVERSE, DECK END	——	2	2'-5	7
5b1	LONGITUDINAL	——	34	16'-6	585
7b2	LONGITUDINAL, DECK ENDS	——	60	12'-0	1,472
			TOTAL (LBS.)		3,127

BENT BAR DETAILS

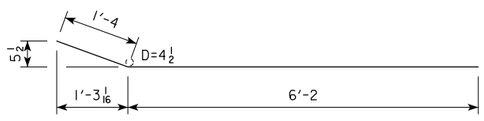

NOTE: ALL DIMENSIONS ARE OUT TO OUT. D = PIN DIA.

HIGH PERF. CONC. - 1 MODULE

LOCATION	QTY. (CY)
DECK	8.4
TOTAL (CY)	8.4

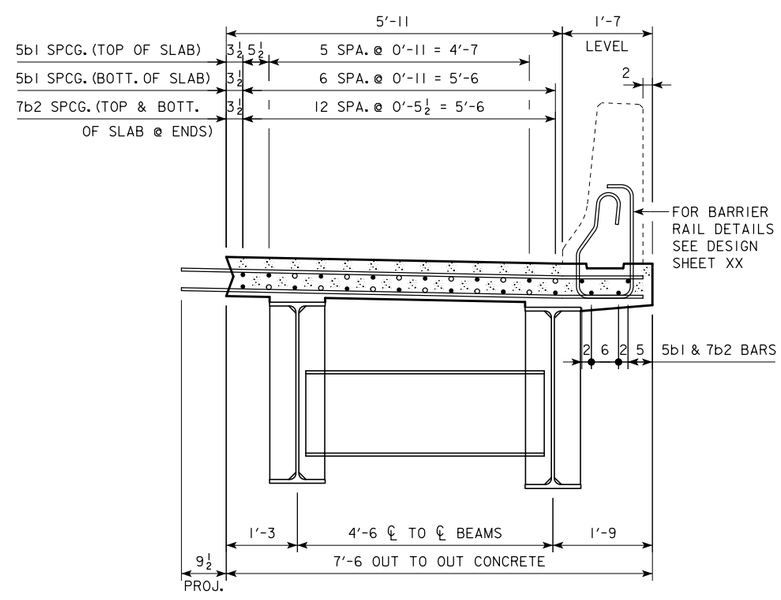

SECTION A-A

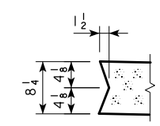

LONGIT. & TRANSV. JOINT KEY DETAIL

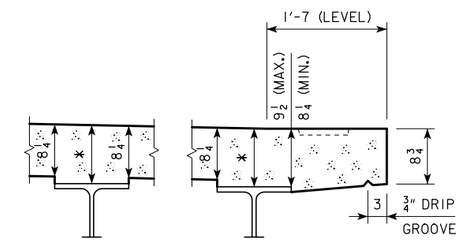

TYP. SLAB AND HAUNCH DETAIL

* FOR SLAB THICKNESS OVER BEAMS SEE HAUNCH AND CAMBER DETAILS ON DESIGN SHEET XX.

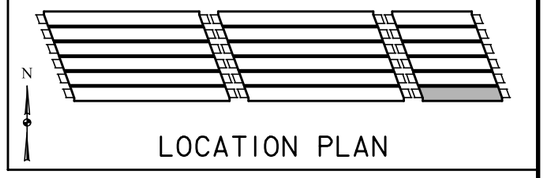

LOCATION PLAN

DESIGN FOR 20° SKEW (R.A.)

234'-0 x 44'-0 ROLLED STEEL BEAM BRIDGE

91'-0 & 51'-0 END SPANS — 92'-0 INTERIOR SPAN

M50-F EXTERIOR MODULE DETAILS

STA. 528+80.00 IA 92 — ?, 2004

POTTAWATTAMIE COUNTY

IOWA DEPARTMENT OF TRANSPORTATION - HIGHWAY DIVISION

DESIGN SHEET NO. 49 OF ? FILE NO. 30846 DESIGN NO. 115

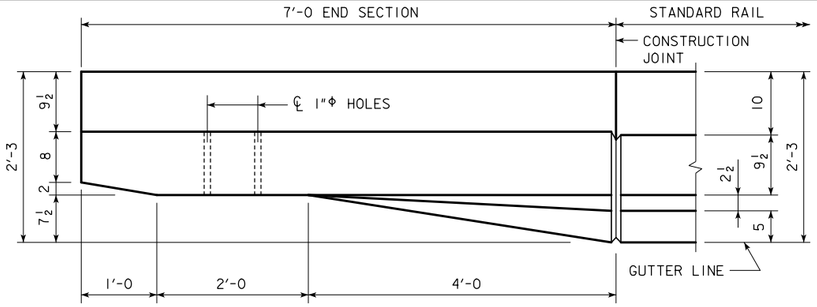

PART PLAN VIEW

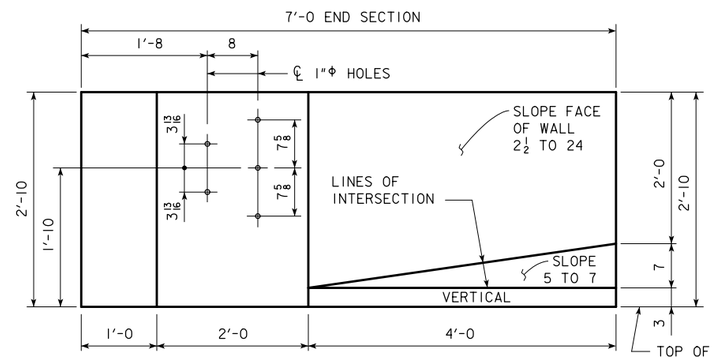

PART ELEVATION VIEW

PROVIDE 5 HOLES FORMED WITH 1"Φ PLASTIC CONDUIT. COST TO BE INCLUDED IN PRICE BID FOR CONCRETE BARRIER RAILING.

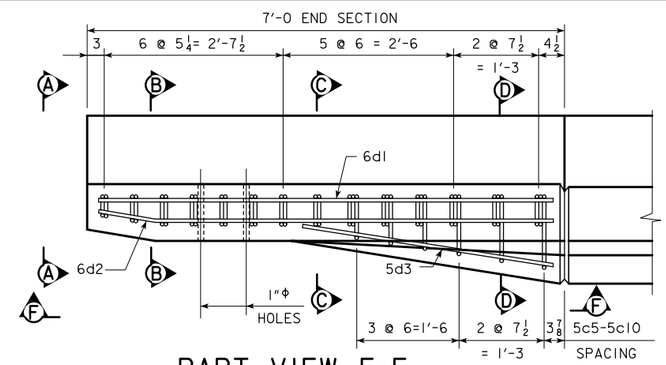

PART VIEW E-E

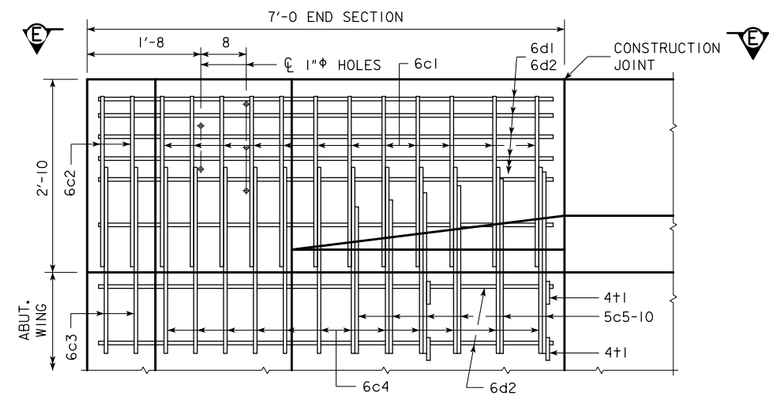

PART VIEW F-F

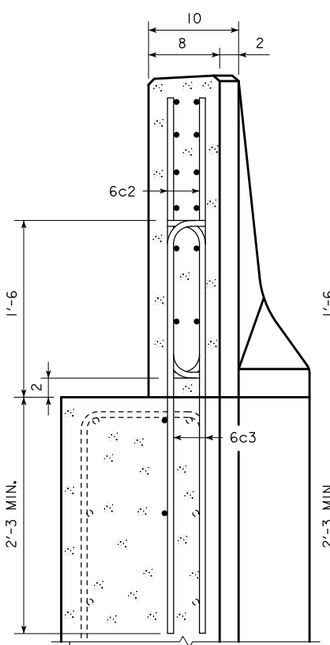

VIEW A-A

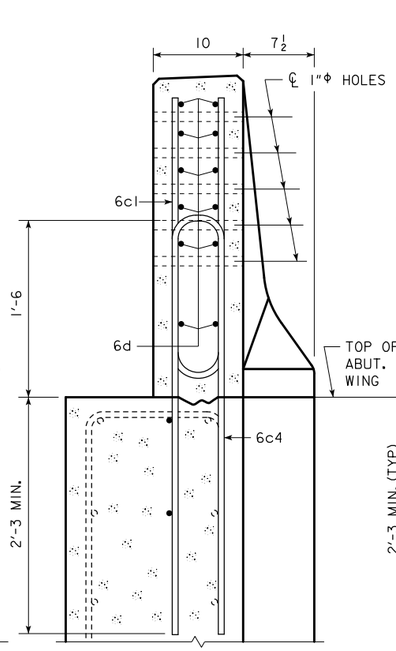

SECTION B-B

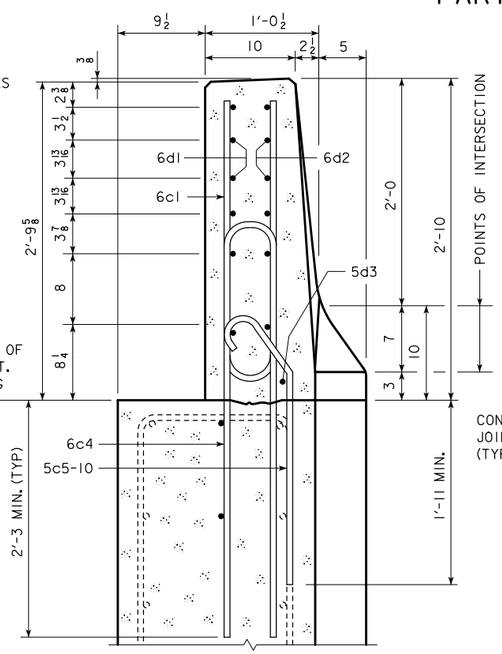

SECTION C-C

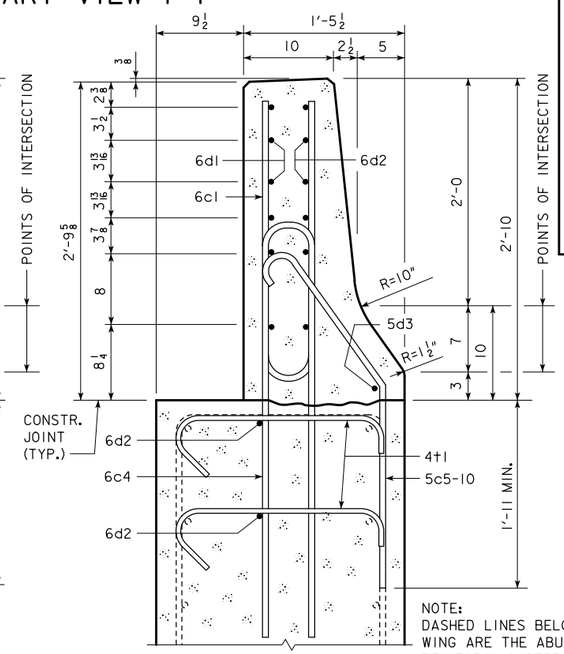

SECTION D-D

NOTE:
DASHED LINES BELOW THE TOP OF WING ARE THE ABUTMENT WING REINFORCING STEEL. SEE WING ABUTMENT SHEET FOR PLACEMENT.

EPOXY REINFORCING STEEL - ONE END SECTION

BAR	LOCATION	SHAPE	NO.	LENGTH	WEIGHT
6c1	VERTICAL		12	5'-6	99
6c2	VERTICAL		4	2'-10	17
6c3	VERTICAL		4	4'-1	25
6c4	VERTICAL		12	8'-0	144
5c5-10	VERTICAL		6	VARIES	23
6d1	HORIZONTAL		6	6'-8	60
6d2	HORIZONTAL		8	6'-9	81
5d3	HORIZONTAL		1	3'-9	4
4t1	ABUTMENT WING TIE BARS		4	VARIES	5
(INCLUDE WITH BARRIER RAIL REINFORCING)		TOTAL WEIGHT (LBS.)			458

CONCRETE PLACEMENT SUMMARY

SECTION	TOTAL
BARRIER RAIL ONE END SECTION	0.65 CU. YD.

BENT BAR DETAILS

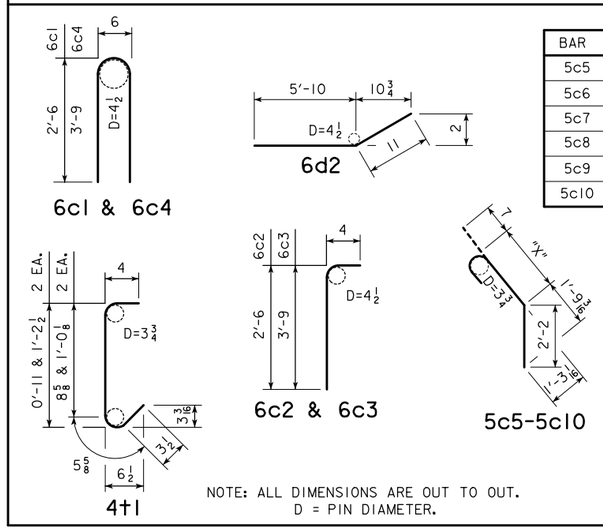

BAR	"X"
5c5	0'-6½
5c6	0'-8½
5c7	0'-10¼
5c8	1'-0¼
5c9	1'-2
5c10	1'-4

NOTE:
4t1 PLACEMENT- 2 BARS EACH LEVEL OF 6d2 IN WING FOOTING.

NOTE:
CONSTRUCTION JOINT BETWEEN TOP OF WING AND BARRIER RAIL IS ROUGHENED CONCRETE.

NOTE:
THE 10" RADIUS AND 1½" RADIUS ARE TYPICAL AND SHALL BE USED WHEN CONSTRUCTING THE CORNERS FOR VIEW A-A, SECTION B-B, SECTION C-C AND SECTION D-D.

NOTE:
THE 6c4, 6c3, 5c5-10, 2 - 6d2 AND 4t1 BARS ARE TO BE PLACED WITH THE ABUTMENT WING. THE DETAILS FOR PLACEMENT ARE SHOWN ON THE WING ABUTMENT SHEET.

DESIGN FOR 20° SKEW (R.A.)

234'-0 x 44'-0 ROLLED STEEL BEAM BRIDGE

91'-0 & 51'-0 END SPANS — 92'-0 INTERIOR SPAN

BARRIER END SECTION

STA. 528+80.00 IA 92 — ?, 2004

POTTAWATTAMIE COUNTY

IOWA DEPARTMENT OF TRANSPORTATION - HIGHWAY DIVISION

DESIGN SHEET NO. 50 OF ? FILE NO. 30846 DESIGN NO. 115

REVISION 02-08 - REINFORCING STEEL PATTERN & SIZE CHANGED AND WEIGHT ADJUSTED. CONCRETE THICKNESS WAS INCREASED ½" AND QUANTITY ADJUSTED.
ENGLISHDECKRAILBRIDGES.DGN 1017 - THIS SHEET ISSUED 09-01

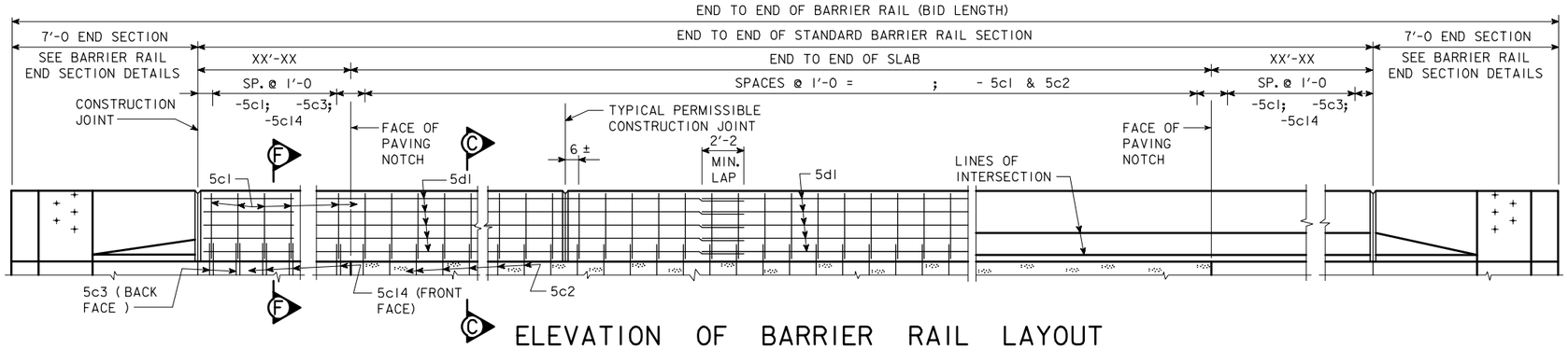

ELEVATION OF BARRIER RAIL LAYOUT

BARRIER RAIL CONSTRUCTION PROCEDURE NOTE:

IT IS THE INTENT OF THESE PLANS FOR THE BARRIER RAIL TO BE CAST-IN-PLACE AFTER ALL THE DECK MODULES HAVE BEEN SET, AND AFTER ALL DECK CLOSURE POURS HAVE BEEN COMPLETED. MODULE WEIGHTS AND LIFTING POCKET DESIGN/DETAILS DO NOT ACCOUNT FOR THE WEIGHT OF THE BARRIER RAIL OR BARRIER RAIL FORMS.

ALTERNATE CONSTRUCTION PROCEDURES MAY BE SUBMITTED TO ACCOMMODATE PRE-PLACEMENT OF THE BARRIER RAIL FORMS AND/OR CONSTRUCTION OF THE BARRIER RAIL ON THE PRECAST PORTIONS OF THE DECK PRIOR TO SETTING OF THE DECK MODULES, SUBJECT TO THE ENGINEER'S APPROVAL. ALTERNATE CONSTRUCTION PROCEDURES SHALL INCLUDE DESIGN CALCULATIONS AND MODIFIED LIFTING POCKET DETAILS (AS NECESSARY) TO COMPENSATE FOR THE INCREASED MODULE DEAD LOAD. DESIGN CALCULATIONS AND DETAILS SHALL BE PREPARED AND SEALED BY A PROFESSIONAL ENGINEER LICENSED IN THE STATE OF IOWA. PORTIONS OF THE CONCRETE BARRIER LOCATED IN CAST-IN-PLACE DECK CLOSURE ZONES SHALL BE CAST-IN-PLACE. JOINTS BETWEEN PRECAST AND CAST-IN-PLACE BARRIER RAIL SHALL BE OFFSET A MINIMUM OF 2'-0 FROM TRANSVERSE DECK JOINTS. LONGITUDINAL REINFORCING BARS SHALL PROJECT A SUFFICIENT DISTANCE FROM THE BARRIER RAIL CONSTRUCTION JOINTS TO MAINTAIN THE MINIMUM BAR SPLICE LENGTH NOTED IN THE PLANS.

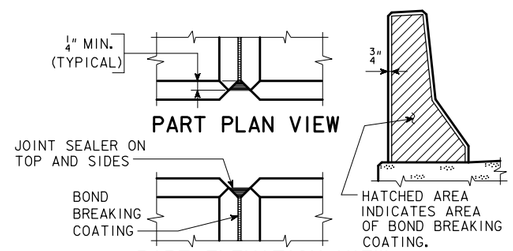

BARRIER RAIL JOINT DETAILS

BARRIER RAIL NOTES:

MINIMUM CLEAR DISTANCE FROM FACE OF CONCRETE TO NEAR REINFORCING BAR IS TO BE 2" UNLESS OTHERWISE NOTED OR SHOWN.

THE PERMISSIBLE CONSTRUCTION JOINTS ARE TO BE PLACED BETWEEN VERTICAL BARS AT A MINIMUM SPACING OF 20 FEET. CONSTRUCTION JOINT CONTACT SURFACES ARE TO BE COATED WITH AN APPROVED BOND BREAKER.

COST OF THE JOINT SEALER AND BOND BREAKER SHALL BE CONSIDERED INCIDENTAL TO OTHER CONSTRUCTION.

ALL BARRIER RAIL REINFORCING STEEL IS TO BE EPOXY COATED.

THE CONCRETE BARRIER RAIL IS TO BE BID ON A LINEAL FOOT BASIS. THE NUMBER OF LINEAL FEET OF BARRIER RAIL INSTALLED WILL BE PAID FOR AT THE CONTRACT PRICE PER LINEAL FOOT BASED ON PLAN QUANTITIES. PRICE BID FOR CONCRETE BARRIER RAILING SHALL BE FULL COMPENSATION FOR FURNISHING ALL MATERIAL, EXCLUDING REINFORCING STEEL, AND ALL OF THE EQUIPMENT AND LABOR REQUIRED TO ERECT THE RAIL IN ACCORDANCE WITH THESE PLANS AND CURRENT SPECIFICATIONS. IF CONDUIT IS REQUIRED IN THIS PLAN THE RIGID STEEL CONDUIT, JUNCTION BOXES AND FITTINGS INCLUDING LABOR AND ANY ADDITIONAL WORK TO DO THE INSTALLATION IS CONSIDERED INCIDENTAL TO THE COST OF THE RAILING.

ALL BARRIER RAIL REINFORCING STEEL IS TO BE INCLUDED WITH THE SUPERSTRUCTURE REINFORCING STEEL.

THE JOINT SEALER SHALL BE LIGHT GRAY NONSAG LATEX CAULKING SEALER MARKETED FOR OUTDOOR USE. NO TESTING OR CERTIFICATION IS REQUIRED.

TOP OF THE BARRIER RAIL IS TO BE PARALLEL TO THE THEORETICAL ℄ GRADE.

CROSS SECTIONAL AREA OF THE STANDARD SECTION OF THE BARRIER RAIL = 2.84 SQUARE FEET.

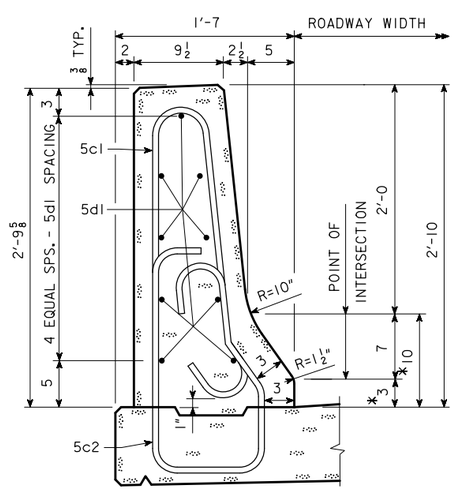

PART SECTION C-C

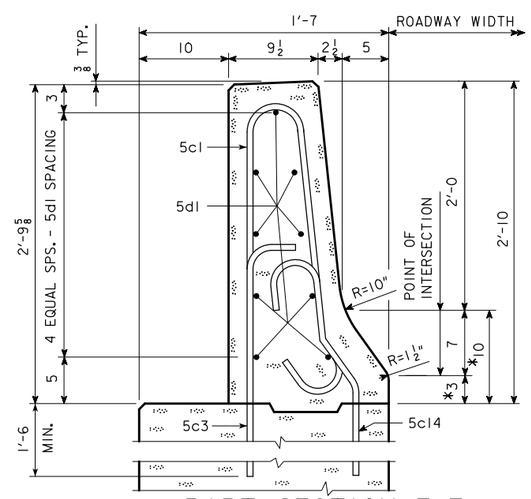

PART SECTION F-F

EPOXY REINF. STEEL-TWO BARRIER RAILS

SECTION	BAR	LOCATION	SHAPE	NO.	LENGTH	WEIGHT
STANDARD SECTION	5c1	VERTICAL			5'-11	
	5c2	VERTICAL			6'-0	
	5c3	VERTICAL			3'-3	
	5c14	VERTICAL			3'-10	
	5d1	LONGITUDINAL				
	BARRIER RAIL END SECTION		4 AT 458 LBS.			1832
(INCLUDE WITH SUPERSTRUCTURE REINFORCING)			TOTAL (LBS.)			

BENT BAR DETAILS

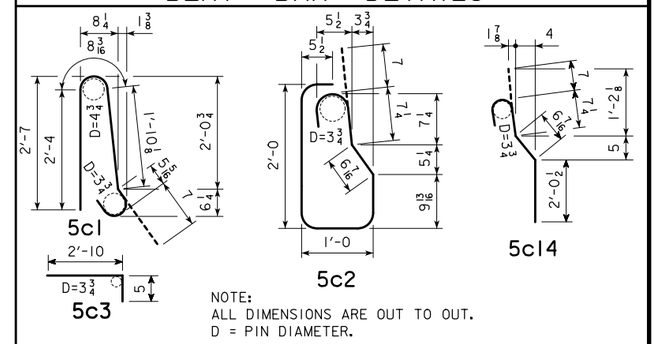

CONCRETE PLACEMENT SUMMARY

SECTION		TOTAL
STANDARD SECTION	@ 0.1052 CU. YD. PER FT.	
BARRIER RAIL END SECTION	4 @ 0.65 CU. YD.	2.6
	TOTAL (CU. YD.)	

CONCRETE BARRIER RAIL QUANTITIES

ITEM	UNIT	QUANTITY
CONCRETE BARRIER RAILING	L.F.	

* DENOTES THE MAXIMUM VALUE FOR THIS DIMENSION. THIS DIMENSION MAY VARY DUE TO CONSTRUCTION INACCURACIES.

DESIGN FOR 20° SKEW (R.A.)

234'-0 x 44'-0 ROLLED STEEL BEAM BRIDGE

91'-0 & 51'-0 END SPANS 92'-0 INTERIOR SPAN

BARRIER RAIL DETAILS

STA. 528+80.00 IA 92 ?, 2004

POTTAWATTAMIE COUNTY

IOWA DEPARTMENT OF TRANSPORTATION - HIGHWAY DIVISION

DESIGN SHEET NO. 51 OF ? FILE NO. 30846 DESIGN NO. 115

CORRECTION 05-08 - BARRIER RAIL END SECTION QUANTITIES CORRECTED.
ENGLISHDECKRAILBRIDGES.DGN 1020C - THIS SHEET ISSUED 02-00

BENCH MARK: NO. 501 STA. 529+82.22, -20.2127 FND X NE CORNER BRIDGE, ELEV. 1103.648

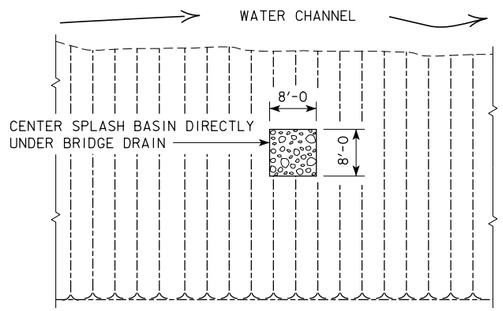

SPLASH BASIN UNDER BRIDGE DRAIN
PLAN VIEW

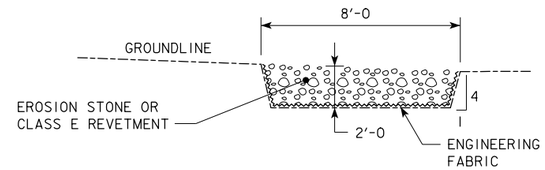

SPLASH BASIN UNDER BRIDGE DRAIN
TYPICAL SECTION FOR EXISTING GRADES

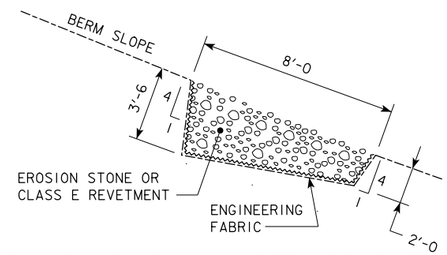

SPLASH BASIN UNDER BRIDGE DRAIN
TYPICAL SECTION FOR BERM SLOPES

WHERE DOES SUBDRAIN GO

SUBDRAIN NOTES:

THIS PLAN SHEET SHOWS DETAILS FOR PLACING ALL SUBDRAINS AND SUBDRAIN OUTLETS REQUIRED FOR THIS STRUCTURE.

THE SUBDRAINS SHALL BE 4" IN DIAMETER AND SHALL BE IN ACCORDANCE WITH ARTICLE 4143.01, B, OF THE STANDARD SPECIFICATIONS.

THE SUBDRAIN OUTLET SHALL CONSIST OF A LENGTH OF PIPE WITH A REMOVABLE RODENT GUARD AS DETAILED ON THIS SHEET. THE LENGTH OF THE OUTLET PIPE SHALL BE DETERMINED BY THE REVETMENT AND IT'S PLACEMENT LOCATION. THE CONTRACTOR IS TO INSURE THE OUTLET PIPE IS ADEQUATELY STRONG ENOUGH AND WILL NOT BE DAMAGED WHEN REVETMENT IS PLACED. A CHECK WILL BE MADE AT THE SUBDRAIN OUTLET TO INSURE THAT THE SUBDRAIN IS NOT DAMAGED AND IS DRAINING PROPERLY DURING THE BACKFILL FLOODING PROCESS. IF A METAL OUTLET PIPE IS USED, IT SHALL BE 6 INCHES IN DIAMETER AND COUPLED TO THE 4 INCH DIAMETER SUBDRAIN IN ONE OF THE TWO FOLLOWING WAYS.

1. USE AN INSIDE FIT REDUCER COUPLER (COUPLER MUST BE INSERTED A MINIMUM OF 1'-0 INTO THE METAL OUTLET PIPE).
2. INSERT 1'-0 OF THE 4"Φ SUBDRAIN INTO THE 6"Φ METAL OUTLET PIPE, THEN FULLY SEAL THE ENTIRE OPENING WITH GROUT.

THE COST OF FURNISHING AND PLACING SUBDRAIN (INCLUDING EXCAVATION), GRANULAR BACKFILL, POROUS BACKFILL, AND SUBDRAIN OUTLET IS TO BE INCLUDED IN THE PRICE BID FOR "STRUCTURAL CONCRETE (BRIDGE)". NO EXTRA PAYMENT WILL BE MADE.

THE DIMENSIONS SHOWN FOR THE PROPOSED SUBDRAINS ARE BASED ON THE PROPOSED GRADING LAYOUT OF BRIDGE BERMS. THE DIMENSIONS SHOWN ARE FOR ESTIMATING ONLY. REQUIRED LENGTHS AND GENERAL LOCATIONS OF SUBDRAINS ARE SUBJECT TO CHANGE DUE TO FIELD ADJUSTMENTS OF THE GRADING LAYOUT.

SUBDRAIN OUTLET ELEVATIONS

LOCATION	ELEVATION
??? ABUTMENT	
??? ABUTMENT	

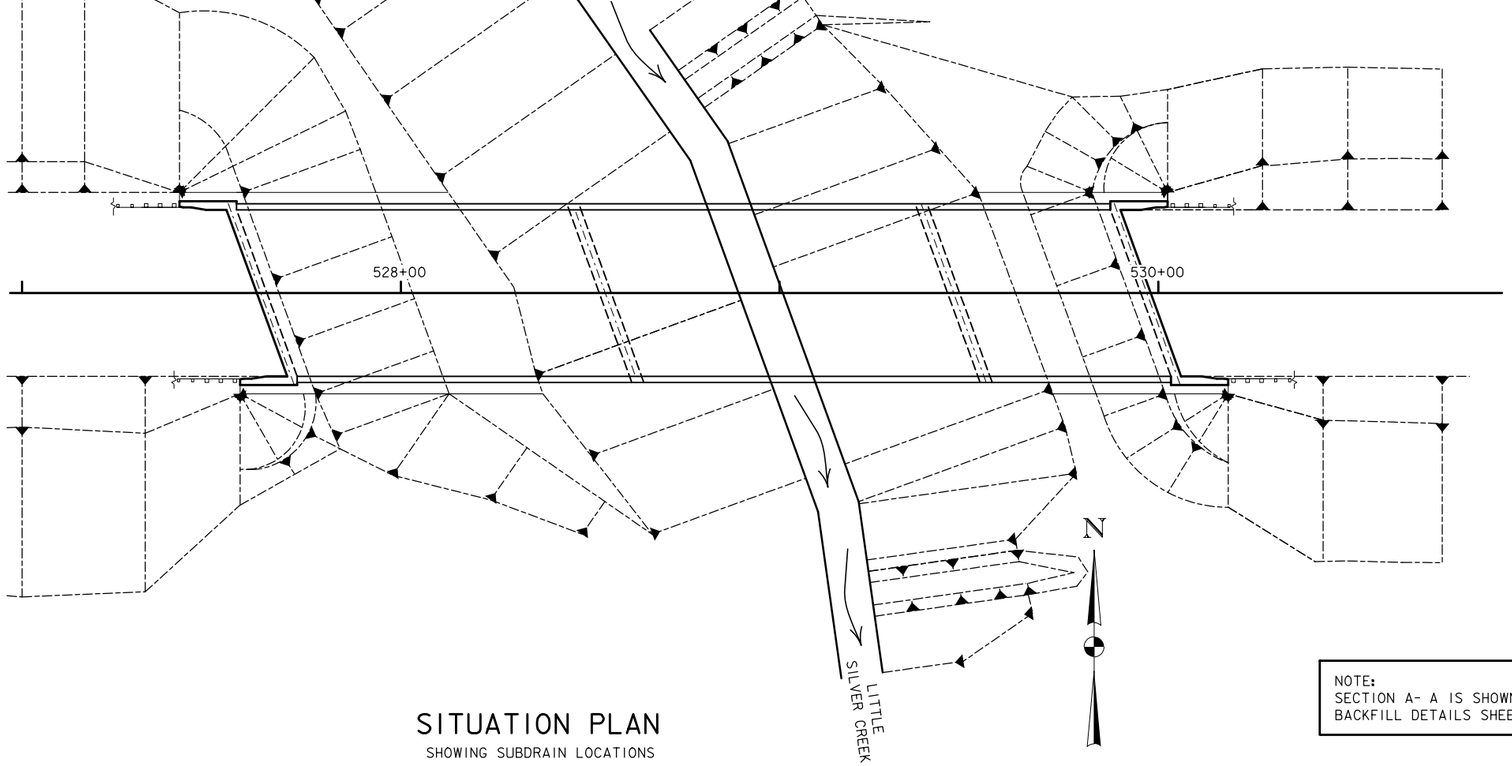

SITUATION PLAN
SHOWING SUBDRAIN LOCATIONS

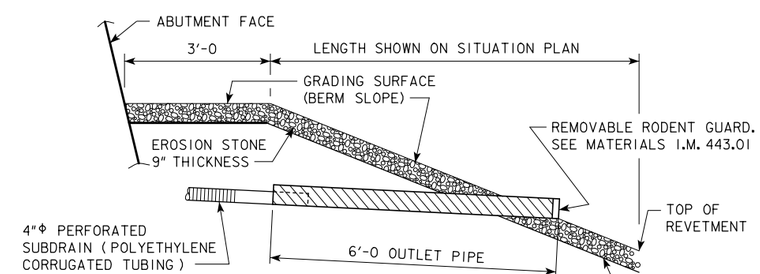

TYPICAL SECTION OF SUBDRAIN OUTLET

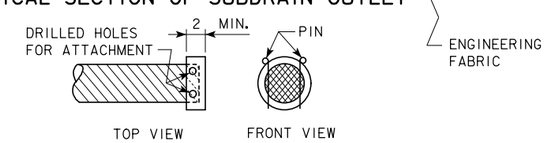

REMOVABLE RODENT GUARD DETAILS

EROSION STONE (EMBEDDED) OUTLET DETAILS

NOTE:
SECTION A- A IS SHOWN ON ABUTMENT BACKFILL DETAILS SHEET.

DESIGN FOR 20° SKEW (R.A.)

234'-0 x 44'-0 ROLLED STEEL BEAM BRIDGE

91'-0 & 51'-0 END SPANS 92'-0 INTERIOR SPAN

SUBDRAIN DETAILS

STA. 528+80.00 IA 92 ?, 2004

POTTAWATTAMIE COUNTY

IOWA DEPARTMENT OF TRANSPORTATION - HIGHWAY DIVISION

DESIGN SHEET NO. 52 OF ? FILE NO. 30846 DESIGN NO. 115

REVISED 02-12 - THE 3'-0 TOP OF THE BERM SLOPE PROTECTION WAS CHANGED TO EROSION STONE FOR ALL SLOPE PROTECTION CONDITIONS.
ENGLISHFORESLOPEPROTECTIONBRIDGES.DGN 1007C - THIS SHEET ISSUED 06-02 FOR WATER CROSSINGS.

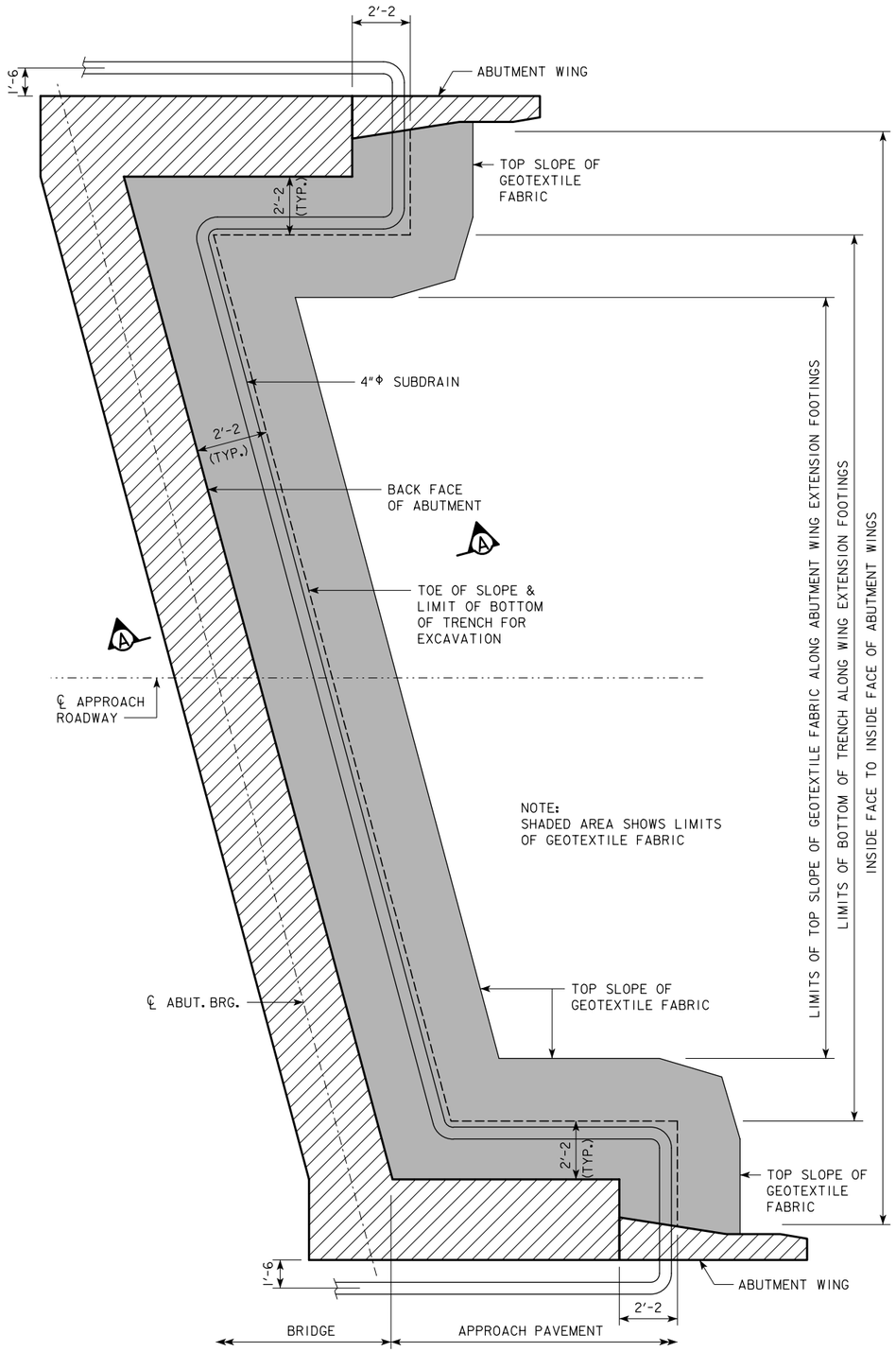

ABUTMENT PLAN WITH WING EXTENSIONS

TECHNICAL DATA INFORMATION - GEOTEXTILE FABRIC				
MECHANICAL PROPERTIES	TEST METHOD	UNIT	MINIMUM AVERAGE ROLL VALUE	
			MD	CD
TENSILE STRENGTH (AT 5% STRAIN)	ASTM D 4595	kN/m (LBS/FT)	19.8 (1356)	19.8 (1356)
APPARENT OPENING SIZE (AOS)	ASTM D 4751	mm (U.S. SIEVE)	0.43 MAX (#40)	
FLOW RATE	ASTM D 4491	$L/MIN/m^2$ ($GAL/MIN/FT^2$)	733 (18)	
UV RESISTANCE (AT 500 HOURS)	ASTM D 4355	% STRENGTH RETAINED	70	

ABUTMENT BACKFILL PROCESS:

THE BASE OF THE EXCAVATION SUBGRADE BEHIND THE ABUTMENT IS TO BE GRADED WITH A 4% SLOPE AWAY FROM THE ABUTMENT FOOTING AND A 2% CROSS SLOPE IN THE DIRECTION OF THE SUBDRAIN OUTLET. THIS EXCAVATION SHAPING IS TO BE DONE PRIOR TO BEGINNING INSTALLATION OF THE GEOTEXTILE AND BACKFILL MATERIAL.

AFTER THE SUBGRADE HAS BEEN SHAPED, THE GEOTEXTILE FABRIC SHALL BE INSTALLED IN ACCORDANCE WITH THE DETAILS SHOWN. THE FABRIC IS INTENDED TO BE INSTALLED IN THE BASE OF THE EXCAVATION AND EXTENDED VERTICALLY UP THE ABUTMENT BACKWALL, ABUTMENT WING WALLS, AND EXCAVATION FACE TO A HEIGHT THAT WILL BE APPROXIMATELY 1 TO 2 FOOT HIGHER THAN THE HEIGHT OF THE POROUS BACKFILL PLACEMENT AS SHOWN IN THE "BACKFILL DETAILS" ON THIS SHEET. THE STRIPS OF THE FABRIC PLACED SHALL OVERLAP APPROXIMATELY 1 FOOT AND SHALL BE PINNED IN PLACE. THE FABRIC SHALL BE ATTACHED TO THE ABUTMENT BY USING LATH FOLDED IN THE FABRIC AND SECURED TO THE CONCRETE WITH SHALLOW CONCRETE NAILS. THE FABRIC PLACED AGAINST THE EXCAVATION FACE SHALL BE PINNED.

WHEN THE FABRIC IS IN PLACE, THE SUBDRAIN SHALL BE INSTALLED DIRECTLY ON THE FABRIC AT THE TOE OF THE REAR EXCAVATION SLOPE. A SLOT WILL NEED TO BE CUT IN THE FABRIC AT THE POINT WHERE THE SUBDRAIN EXITS THE FABRIC NEAR THE END OF THE ABUTMENT WING WALL.

POROUS BACKFILL IS THEN PLACED AND LEVELED, NO COMPACTION IS REQUIRED.

THE REMAINING WORK INVOLVES BACKFILLING WITH FLOODABLE BACKFILL, SURFACE FLOODING, AND VIBRATORY COMPACTION. THE FLOODABLE BACKFILL MATERIAL SHALL BE IN ACCORDANCE WITH THE STANDARD SPECIFICATIONS. THE FLOODABLE BACKFILL SHALL BE PLACED IN INDIVIDUAL LIFTS, SURFACE FLOODED, AND COMPACTED WITH VIBRATORY COMPACTION TO ENSURE FULL CONSOLIDATION. LIMIT THE LOOSE LIFTS TO NO MORE THAN 2 FEET OF THICKNESS.

START SURFACE FLOODING FOR EACH FLOODABLE BACKFILL LIFT AT THE HIGH POINT OF THE SUBDRAIN AND PROGRESS TO THE LOW POINT WHERE THE SUBDRAIN EXITS THE FABRIC. TO ENSURE UNIFORM SURFACE FLOODING, WATER RUNNING FULL IN A 2-INCH DIAMETER HOSE SHOULD BE SPRAYED IN SUCCESSIVE 6-FOOT TO 8-FOOT INCREMENTS FOR 3 MINUTES WITHIN EACH INCREMENT.

FLOODABLE BACKFILL LIFT PLACEMENT, FLOODING, AND COMPACTION SHALL PROGRESS UNTIL THE REQUIRED FULL THICKNESS OF THE ABUTMENT BACKFILL HAS BEEN COMPLETED.

WATER REQUIRED FOR FLOODING, SUBDRAINS, POROUS BACKFILL, FLOODABLE BACKFILL, AND GEOTEXTILE FABRIC FURNISHED AT THE BRIDGE ABUTMENTS WILL NOT BE MEASURED SEPARATELY FOR PAYMENT.

THE COST OF WATER REQUIRED FOR FLOODING, SUBDRAINS, POROUS BACKFILL, FLOODABLE BACKFILL, AND GEOTEXTILE FABRIC FURNISHED AT THE BRIDGE ABUTMENTS SHALL BE INCLUDED IN THE CONTRACT UNIT PRICE BID FOR STRUCTURAL CONCRETE.

NOTE:

SUBDRAIN SHALL SLOPE DOWNWARD 2% FROM ℄ APPROACH ROADWAY WHEN OUTLETTING BOTH SIDES OF THE ABUTMENT.

SUBDRAIN SHALL SLOPE DOWNWARD 2% FROM HIGH END WHEN OUTLETTING AT ONE END OF THE ABUTMENT.

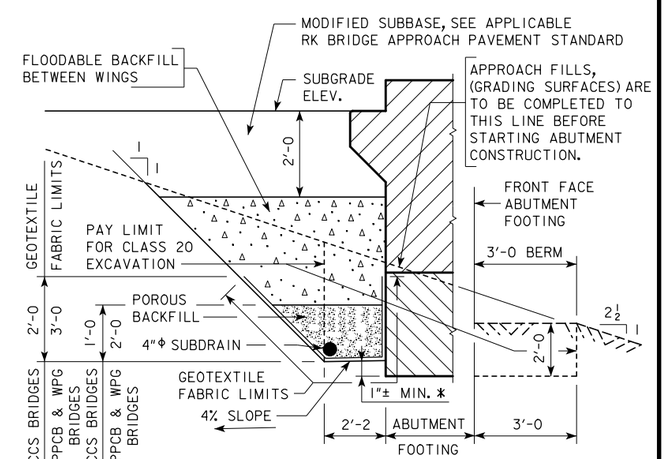

SECTION A-A

BACKFILL DETAILS

NOTE: GEOTEXTILE FABRIC WILL BE ATTACHED TO FACE OF ABUTMENT FOOTING AND WINGS.

* DIMENSION VARIES DUE TO 2% SUBDRAIN SLOPE.

NOTE:
SEE SUBDRAIN DETAILS SHEET FOR DETAILS NOT SHOWN ON THIS SHEET WHICH ARE PERTINENT TO THIS STRUCTURE.

DESIGN FOR 20° SKEW (R.A.)

234'-0 x 44'-0 ROLLED STEEL BEAM BRIDGE

91'-0 & 51'-0 END SPANS — 92'-0 INTERIOR SPAN

ABUTMENT BACKFILL DETAILS

STA. 528+80.00 IA 22 AT BACKFACE OF ABUTMENTS — ?, 2004

POTTAWATTAMIE COUNTY

IOWA DEPARTMENT OF TRANSPORTATION - HIGHWAY DIVISION

DESIGN SHEET NO. 53 OF ? FILE NO. 30846 DESIGN NO. 115

DESIGN TEAM CJC / PES	ABUTMENT BACKFILL DETAILS (WING EXTENSION ABUTMENTS)	STANDARD SHEET 1007E	POTTAWATTAMIE COUNTY	PROJECT NUMBER BRF-092-1(64)--38-78	SHEET NUMBER 54

REVISED 04-12 - EXCAVATION LIMIT ON THE FRONT FACE OF THE ABUTMENT WAS CHANGED TO A 3'-0 LIMIT. THE APPROACH FILL WAS IDENTIFIED AS THE GRADING SURFACE.
ENGLISHFORESLOPEPROTECTIONBRIDGES.DGN - 1007E - THIS SHEET ISSUED 08-07.

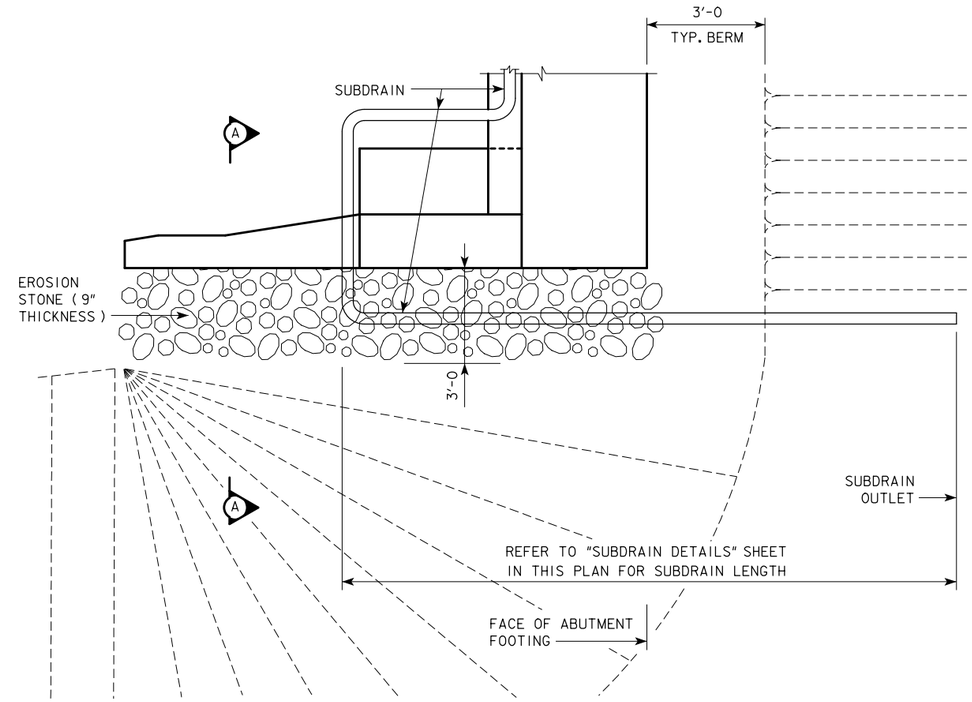

TOP VIEW OF WING ARMORING WITH WING EXTENSION

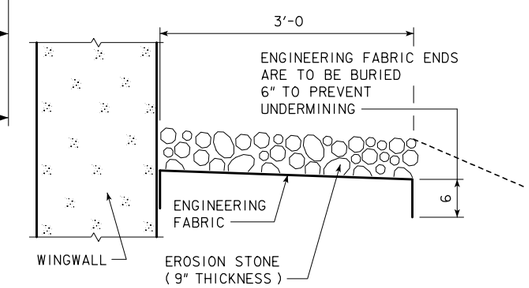

SECTION A-A

A CHECK SHALL BE MADE AT THE SUBDRAIN OUTLET TO INSURE THAT IT IS DRAINING PROPERLY DURING THE BACKFILL FLOODING PROCESS.

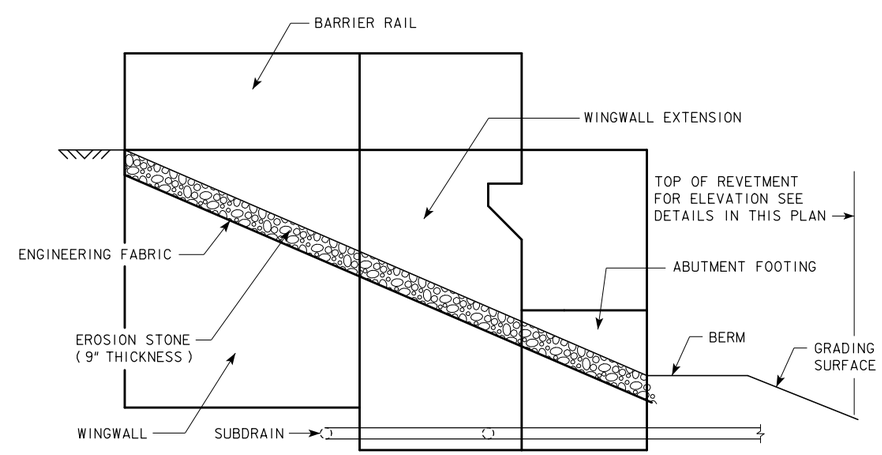

PROFILE VIEW OF WING ARMORING WITH WING EXTENSION

(INTEGRAL ABUTMENT WITH WING EXTENSIONS)

GENERAL NOTES:

EROSION STONE SHALL BE PLACED ALONG THE SIDES OF THE WINGS AND ABUTMENT FOOTING AS SHOWN IN SECTION A-A. THIS IS TYPICAL AT EACH CORNER OF THE BRIDGE UNLESS OTHERWISE NOTED IN THE PLANS. THE EROSION STONE AT THESE LOCATIONS SHALL BE UNDERLAYED WITH ENGINEERING FABRIC IN ACCORDANCE WITH ARTICLE 4196.01, B, 3, OF THE STANDARD SPECIFICATIONS.

THE EROSION STONE SHALL BE IN ACCORDANCE WITH SECTION 4130, OF THE STANDARD SPECIFICATIONS. MATERIAL PASSING THE 3 INCH SCREEEN BUT 100% RETAINED ON A 1 INCH SCREEN MAY BE USED AS CHOKE STONE.

THE EROSION STONE SHALL BE DEPOSITED, SPREAD, CONSOLIDATED AND SHAPED BY MECHANICAL OR HAND METHODS THAT WILL PROVIDE UNIFORM 9" DEPTH AND DENSITY AND PROVIDE UNIFORM SURFACE APPEARANCE.

PAYMENT FOR THE BRIDGE WING ARMORING WILL BE BID PER SQUARE YARD. COST WILL INCLUDE ENGINEERING FABRIC, EROSION STONE, EXCAVATION, SHAPING, AND COMPACTION TO DIMENSIONS SHOWN IN THESE PLANS. BID ITEM SHALL BE "BRIDGE WING ARMORING - EROSION STONE".

DESIGN FOR 20° SKEW (R.A.)

234'-0 x 44'-0 ROLLED STEEL BEAM BRIDGE

91'-0 & 51'-0 END SPANS 92'-0 INTERIOR SPAN

BRIDGE WING ARMORING

STA. 528+80.00 IA 92 ?, 2004

POTTAWATTAMIE COUNTY

IOWA DEPARTMENT OF TRANSPORTATION - HIGHWAY DIVISION

DESIGN SHEET NO. 54 OF ? FILE NO. 30846 DESIGN NO. 115

REVISED 07-11 - THE LABELING OF THE BERM SLOPE IS IDENTIFIED AS 'GRADING SURFACE'. MACADAM STONE WAS CHANGED TO EROSION STONE.
ENGLISHFORESLOPEPROTECTIONBRIDGES.DGN 1005A - THIS SHEET ISSUED 06-02.

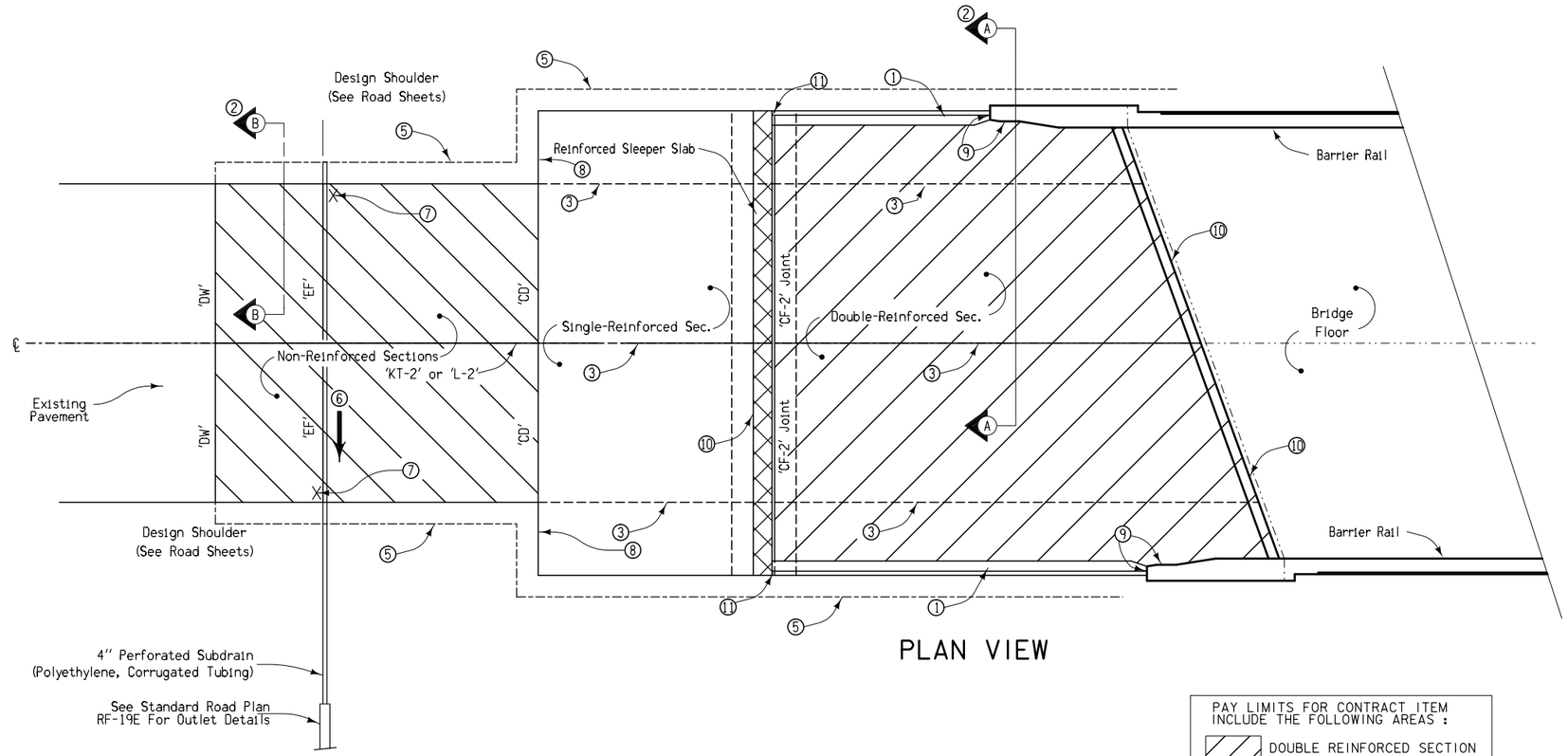

PLAN VIEW

GENERAL NOTES:

The intent of this plan is to detail the construction of a PCC Bridge Approach Section abutting new PCC pavement.

The following items shall be considered incidental to and included in the price bid for "Bridge Approach Pavement, As Per Plan". "Bridge Approach Pavement, As per Plan shall be measured per Standard Specifications 2301.04,D.

- Furnishing and installing reinforcing steel, tie bars, dowel assemblies and Galvanized 1'-6 x 1/4 x2'-0 Plate.
- Excavation for Modified Subbase
- Furnishing and installing Subdrain
- Furnishing and placing Porous Backfill
- Furnishing and installing Subdrain Outlet
- Furnishing and installing Polymer Grid
- Furnishing and Backfilling with Modified Subbase.
- Furnishing and Installing all joints.
- Placing, finishing, texturing, transverse grooving, curing, all joint construction and all other materials and labor to construct the "Bridge Approach Pavement, As Per Plan".
- Furnishing And Placing Class A Crushed Stone Backfill For The Subdrain Outlet.
- Furnishing And Placing 4 Mil Polyethylene Sheeting

1. Build 4'' Sloped Curb from Barrier Rail to beginning of Single Reinforced Section. See 4" Sloped Curb Detail (Design Sheet XX).
2. For Section A–A, Section B–B, and Detail 'D', see Design Sheet XX.
3. Longitudinal Joint (Std. Road Plan PV–101)
   Single Pour – Saw cut joint per detail B on Std Road Plan PV–101.
   Two Pours – Use 'KS' Joint.
4. 'CD' Joints required up to 300' each way from end of Reinforced Bridge Approach Section.
5. Polymer Grid And Excavation limits of Modified Subbase 2' outside of pavement edge, See Standard Road Plan RK–19A.
6. Slope Subdrain to Drain.
7. An ''X'' shall be placed in the plastic concrete near the 'EF' Joint at the out–side edge of pavement.
8. Use 'RD' Joint where PCC Shoulder. 'B' Joint Otherwise.
9. 1/4 inch preformed joint filler and seal top. See Detail 'D' On Design Sheet XX.
10. 1/4 inch preformed joint filler and seal top. See Longitudinal Section On Design Sheet XX.
11. See End View On Design Sheet XX.

ALL REINFORCEMENT TO BE EPOXY COATED

PAY LIMITS FOR CONTRACT ITEM INCLUDE THE FOLLOWING AREAS :

- DOUBLE REINFORCED SECTION
- SINGLE REINFORCED SECTION
- NON-REINFORCED SECTION
- SLEEPER BEAM SECTION

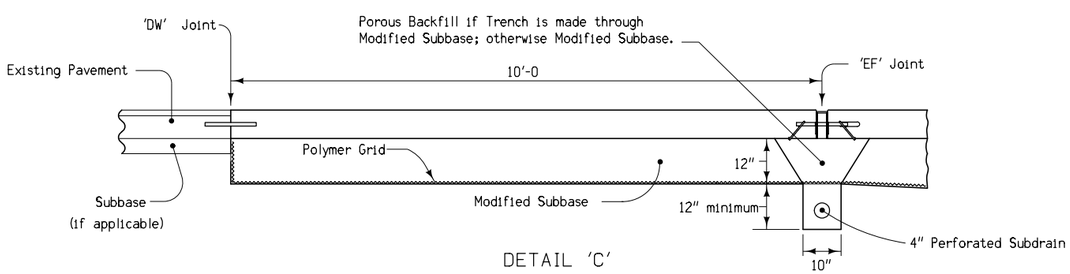

DETAIL 'C'
(Doweled PCC Pavement)

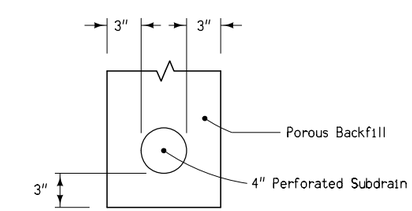

4" SUBDRAIN LOCATION DETAIL

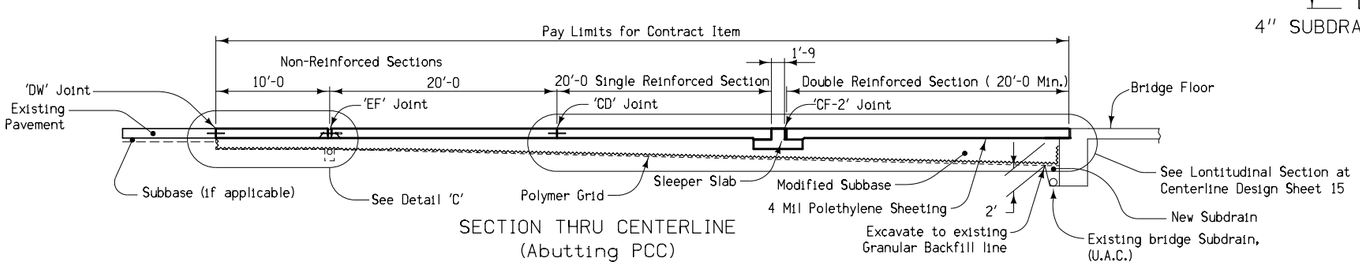

SECTION THRU CENTERLINE
(Abutting PCC)

For joint details,
see Standard Road Plans
PV-101

DESIGN FOR 20° SKEW (R.A.)

234'-0 x 44'-0 ROLLED STEEL BEAM BRIDGE

91'-0 & 51'-0 END SPANS — 92'-0 INTERIOR SPAN

APPROACH SLAB DETAILS

STA. 528+80.00 IA 92 — ?, 2004

POTTAWATTAMIE COUNTY

IOWA DEPARTMENT OF TRANSPORTATION - HIGHWAY DIVISION

DESIGN SHEET NO. 55 OF ? FILE NO. 30846 DESIGN NO. 115

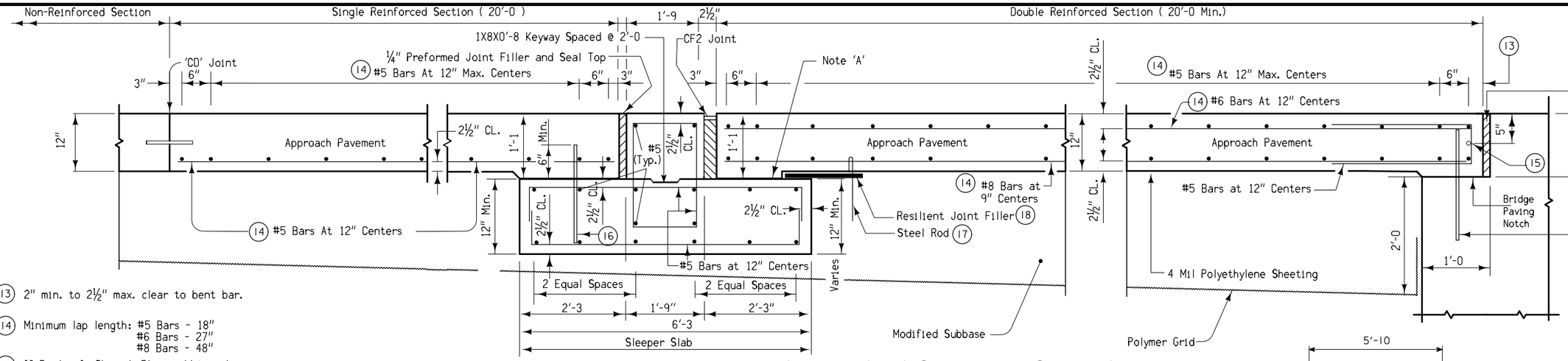

Longitudinal Section at Center Line
(Movable Abutment)

(13) 2" min. to 2½" max. clear to bent bar.

(14) Minimum lap length: #5 Bars - 18"
#6 Bars - 27"
#8 Bars - 48"

(15) If Bridge Is Skewed, Place additional #5 bar parallel to skewed face.

(16) #8 Dowels 1'-6 long with 2½" bottom end clearance. Space @ 24" O.C.

(17) ½" dia. x 2' Steel Rod. Place @ 32" (±) Spacing Full Length oF Sleeper Slab.

(18) ¾" Thick x 16" Wide Resilient Joint Filler Full Length Of Sleeper Slab.

(19) Build 4 inch Sloped Curb, unless noted otherwise in the plan.

(20) Longitudinal Joint: (Standard Road Plan PV-101)
Single Pour - Saw cut joint per detail B.
Two Pours - Use 'KS-2' Joint.

(21) See Design Sheet XX.

(22) The Stud Concrete Anchors shall Be Galvanized And Have a Minimum Pull Out Strength Of 8000 Pounds Based On 4000 Psi Concrete.

All Transverse Bars are #5

All Reinforcing Steel Epoxy Coated

For joint details, see Standard Road Plans PV-101.

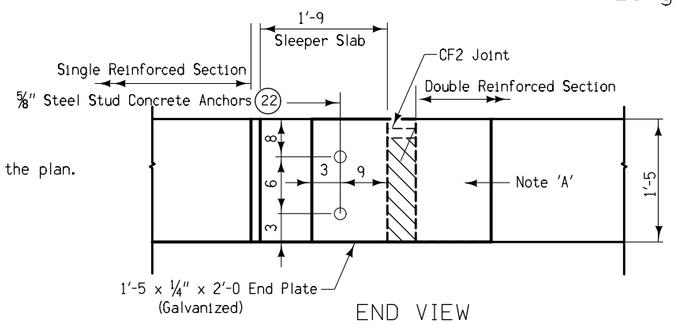

END VIEW
(Slab Edge Details for CF Joint With Curb)

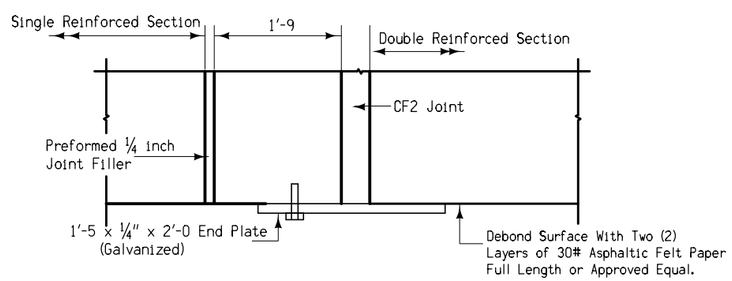

PART PLAN VIEW

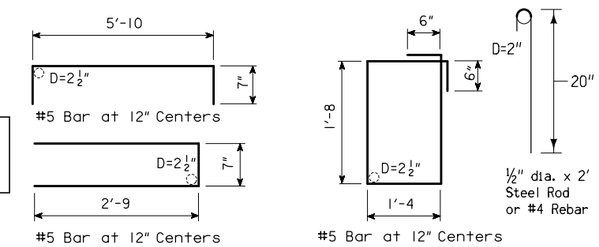

BENT BAR DETAILS
NOTE: ALL DIMENSIONS ARE OUT TO OUT. D = PIN DIAMETER.

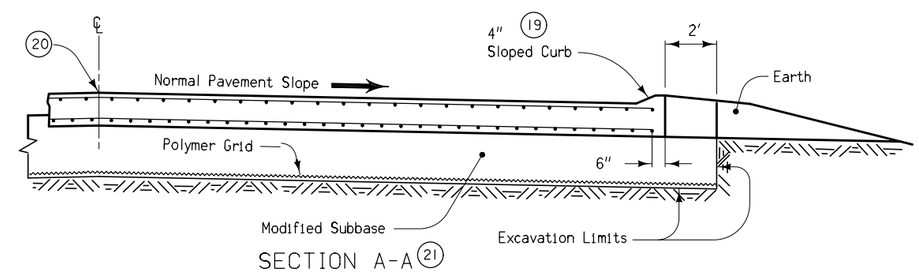

SECTION A-A (21)

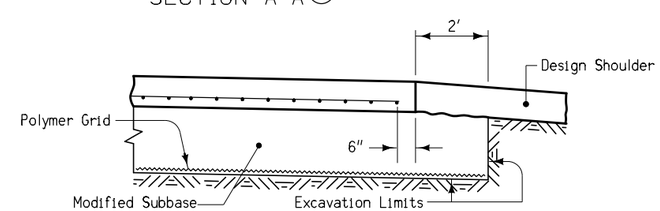

SECTION B-B (21)

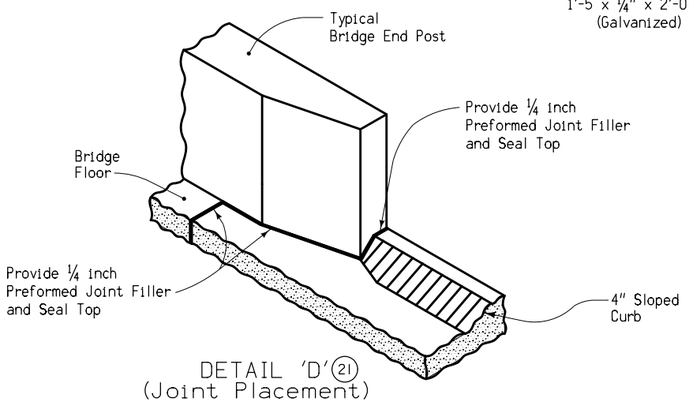

DETAIL 'D' (21)
(Joint Placement)

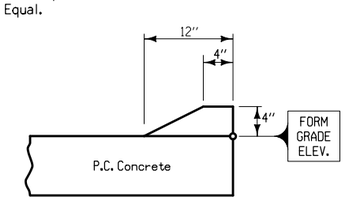

4'' SLOPED CURB

DESIGN FOR 20° SKEW (R.A.)

234'-0 x 44'-0 ROLLED STEEL BEAM BRIDGE

91'-0 & 51'-0 END SPANS 92'-0 INTERIOR SPAN

APPROACH SLAB DETAILS

STA. 528+80.00 IA 92 ?, 2004

POTTAWATTAMIE COUNTY

IOWA DEPARTMENT OF TRANSPORTATION - HIGHWAY DIVISION

DESIGN SHEET NO. 56 OF ? FILE NO. 30846 DESIGN NO. 115