A.C.C. RESURFACING
IM-680-1(126)00--13-78
LETTING DATE 1-14-97

POTTAWATTAMIE CO.

TOTAL SHEETS
25
PROJECT NUMBER
IM-680-1(126)00--13-78
R.O.W. PROJECT NUMBER
PROJECT IDENTIFICATION NUMBER
97-78020-1

IOWA
DEPARTMENT OF TRANSPORTATION
Project Development Division

PLANS OF PROPOSED IMPROVEMENT ON THE

INTERSTATE ROAD SYSTEM
POTTAWATTAMIE COUNTY
A.C.C. RESURFACING

On I-680, From Nebraska State Line E. To I-680/I-29 Interchange

SCALES: As Noted

The Iowa Department of Transporation Metric Standard Specifications for Highway and Bridge Construction, series of 1995, plus current supplemental specifications and special provisions shall apply to construction work on this project.

Value Engineering Saves. Refer to Standard Notation 203-4 on Sheet C.02

STA. 32+00 (Metric)
STA. 104+99 (English)
BEGIN PROJECT
M.P.= 0.00

STA. 82+98 (Metric)
STA. 272+24 (English)
END PROJECT
M.P.= 3.05

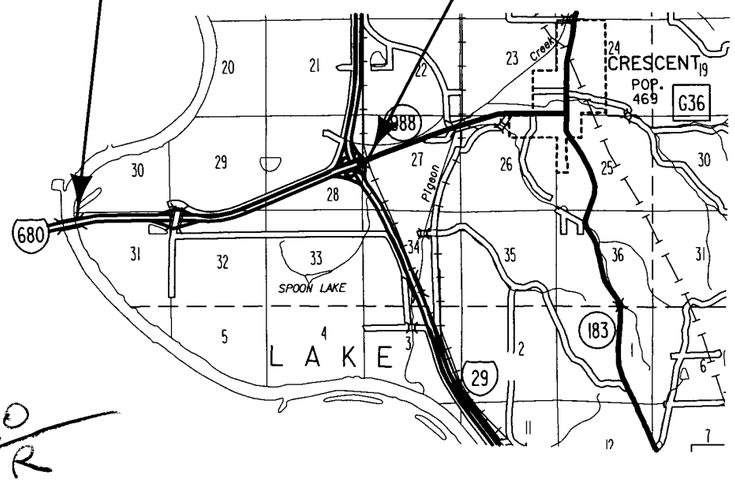

420
R

R-44W

LOCATION MAP SCALE
0 1 2 3 4 5
KILOMETERS

150

INDEX OF SHEETS
105-3
09-27-94

NO.	DESCRIPTION
A.01	Title Sheet
A.02	Location Strip Map
B.01-B.04	Typical Cross Sections
C.01-C.08	Estimated Project Quantities and General Information
J.01-J.04	Traffic Control Detail Sheets
U.01-U.07	500 Series Design Detail Sheets and Special Details

PROJECT LENGTH SUMMARY
105-1
09-27-94

DIV.	LOCATION	m	km
	Westbound Lane		
	Sta. 32+00 to Sta. 82+98	5098.00	
	Equation: (Shortens Length) Sta. 51+34.54 (Back) = Sta. 51+40.48 (Ahead)	5.94	
	Omit Bridge at Sta. 78+56	79.50	
	Eastbound Lane		
	Sta. 32+12 to Sta. 80+89	4877.00	
	Equation: (Shortens Line) Sta. 51+34.54 (Back) = Sta. 51+40.48 (Ahead)	5.94	
	Omit Bridge at Sta. 78+56	79.50	
	Project Length	9804.12	9.804

METRIC STANDARD ROAD PLANS
105-4
09-27-94

The following Standard Road Plans shall be considered applicable to construction work on this project.

NUMBER	DATE	NUMBER	DATE	NUMBER	DATE
RC-16	10-31-95	RE-63	12-03-96	RH-50	12-03-96
RE-2A	10-31-95	RE-65	10-31-95	RH-51	08-20-96
RE-2B	08-20-96	RE-68	12-03-96	RH-52	03-26-96
RE-7	08-20-96	RE-69	12-03-96	RL-14	03-26-96
RE-12A	12-03-96	RE-70(1)	12-03-96	RS-2	12-03-96
RE-12B	12-03-96	RE-70(2)	12-03-96	RS-3	06-06-95
RE-33A	08-20-96	RE-70(3)	12-03-96	RS-62	04-30-96
RE-33B	08-20-96			RS-63A	04-30-96
RE-47	08-20-96	RF-32	03-28-95	RS-63B	04-30-96
RE-48A	12-08-95	RG-2	03-26-96	RS-65A	06-06-95
RE-48B	12-08-95	RH-41D	09-27-94	RS-65B	06-06-95
RE-55	10-31-95				

12-03-96 101-4

DESIGN DATA RURAL

1997 AADT	14640	V.P.D.
2017 AADT	22110	V.P.D.
2017 DHV	220	V.P.H.
TRUCKS	10	%
Daily Design Year ESALs	881	

REVISIONS

Iowa Department of Transportation
Project Development Division
AUTHORIZED FOR LETTING
Donald L. Eads
DESIGN ENGINEER
Date 11/15/96

LICENSED PROFESSIONAL ENGINEER JOHN R. ABRAMS 7229 IOWA

I hereby certify that this plan was prepared under my supervision and that engineering decisions with regard to the design were made by me or by other duly Registered Professional Engineers under the laws of the State of Iowa.
Name
Iowa Registration No. 7229 Date 11/15/96

U.S. DEPARTMENT OF TRANSPORTATION
FEDERAL HIGHWAY ADMINISTRATION
APPROVED

FOR THE DIVISION ADMINISTRATOR DATE

DESIGN TEAM	ABRAMS/MACKEY/HALVERSON	METRIC	IOWA DOT * OFFICE OF DESIGN	POTTAWATTAMIE	COUNTY	PROJECT NUMBER	IM-680-1(126)00--13-78	SHEET NUMBER	A.01

15-NOV-1996 09:17 gmackey /usr/svr1/usr4/ord/5a/k78680126.a01

D1

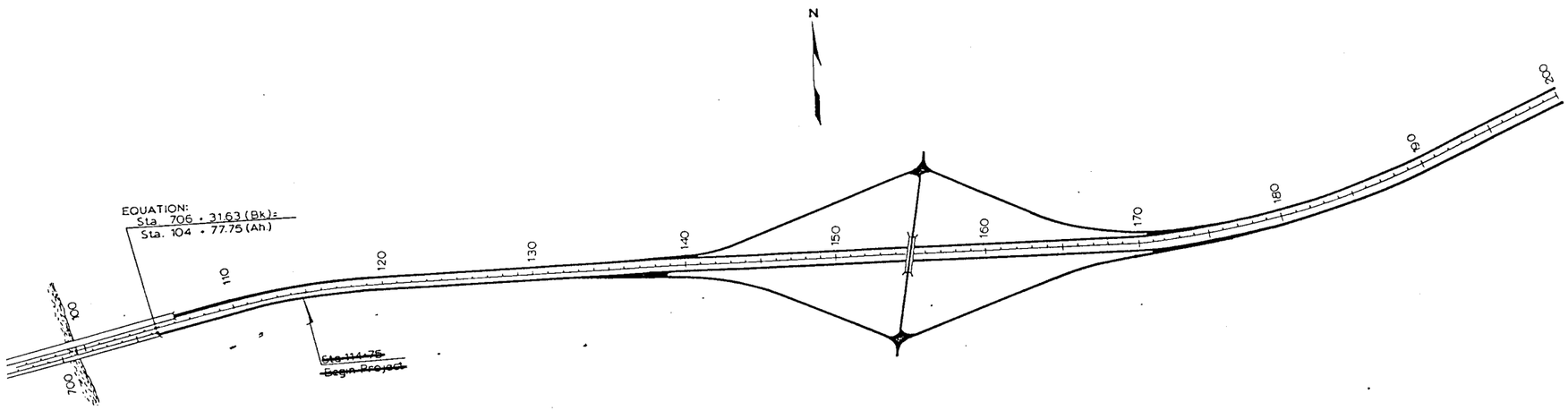

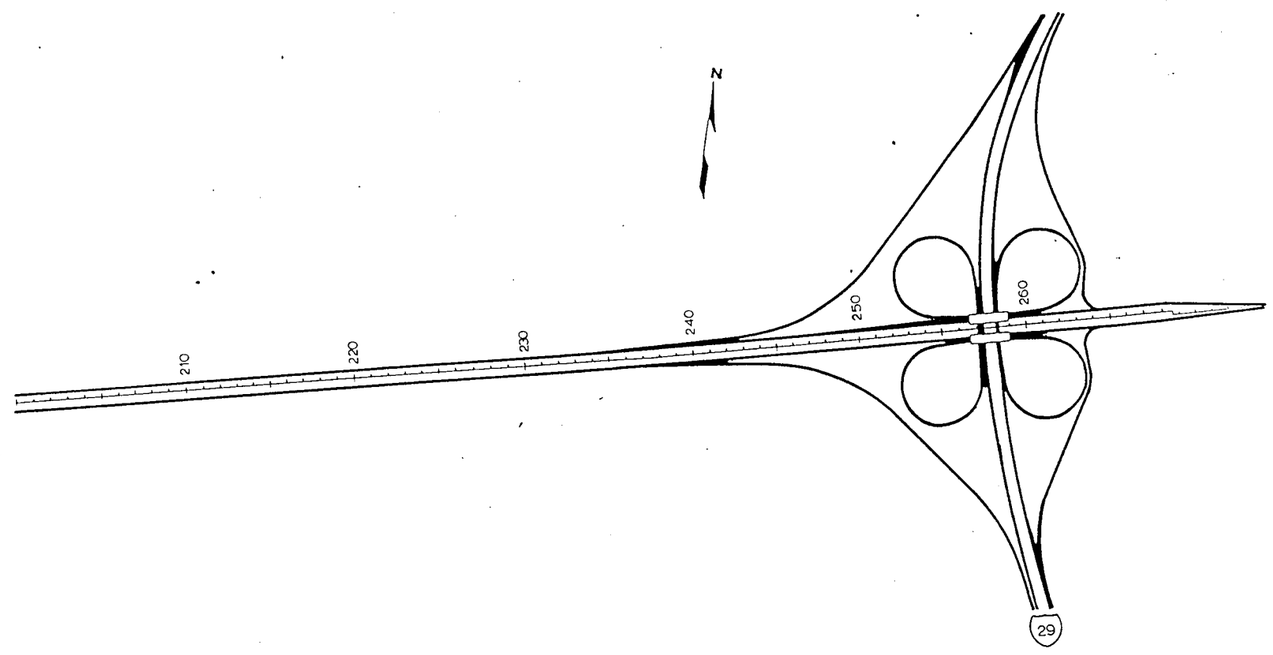

Location Strip Map
(English Stationing)

DESIGN TEAM ABRAMS/MACKEY/HALVERSON	METRIC		POTTAWATTAMIE COUNTY	PROJECT NUMBER IM-680-1(126)00--13-78	SHEET NUMBER A.02

4-NOV-1996 15:00 rhalver /usr/svr1/usr4/ord/5a/k78680126.u04

IM-1

Dimensions in mm unless noted.

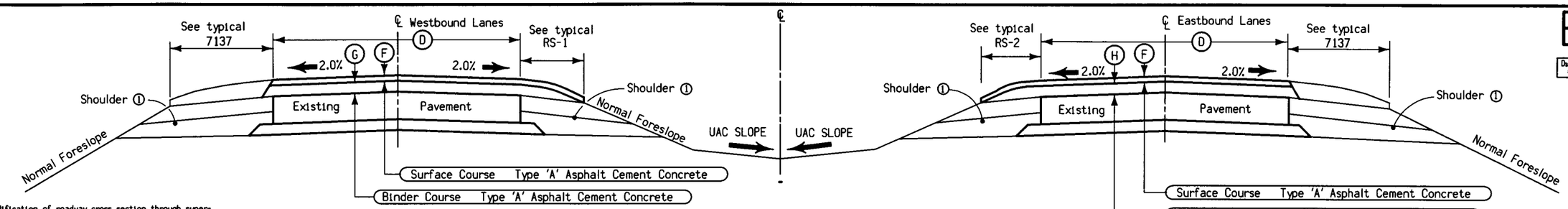

Notes:

For modification of roadway cross section through superelevated curves, refer to tabulation of superelevated curves, and appropriate Standard Road Plans.

Centerline of median shall coincide with centerline of survey shown on plans, unless specified otherwise.

① Refer to other drawings for details of shoulder design and construction.

② Tack Coat estimated for 3 applications.

③ Includes 15.1 mg/Sta. for crown correction.

④ Not a bid item.

TABLE OF DESIGN QUANTITIES Per Station

LOCATION			Ⓕ	Ⓖ	Ⓗ	Ⓓ	PRIME & TACK COAT	ASPHALT CEMENT	ASPHALT CEMENT CONCRETE Mg	
ROAD IDENTIFICATION	STATION TO STATION		mm	mm	mm	m	L ④	Mg	SURFACE	BINDER ③
I-680 WB	32+00	82+98	50	50		7.2	360	12.15	104.62	116.24
I-680 EB	32+12	80+89	50		100	7.2	540 ②	17.71	104.62	217.38

DESIGN RATES	
ITEM	RATE
Surface Course	2325 kg/m³
Binder Course	2325 kg/m³
Tack Coat	0.20 L/m²

Equation:
Sta. 51+34.54 (Back)
= Sta. 51+40.48 (Ahead)

TYPICAL CROSS SECTION FOR A.C.C. RESURFACING

RS-1
10-96

Dimensions in mm unless noted.

Notes:

① 6:1 Typical, may vary to 4:1 Maximum

② Roll to a Rounded Profile

③ 0.3 m Granular Fillet (incidental). Depth of granular fillet may vary due to erosion of material at shoulder edge.

④ Refer to Standard Road Plan RH-41D for the rumble strip pattern

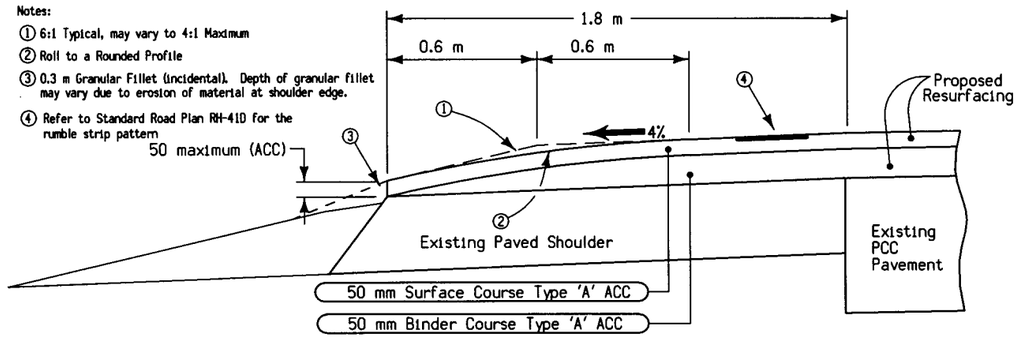

LOCATION			
ROAD IDENTIFICATION	STATION TO STATION		SIDE
I-680 WB	32+00	80+46	Inside

Equation:
Sta. 51+34.54 (Back)
= Sta. 51+40.48 (Ahead)

ACC SHOULDER RESURFACING (MEDIAN SHOULDER)

7137
09-27-94

Dimensions in mm unless noted.

Notes:

① 6:1 Typical, may vary to 4:1 maximum

② Roll to a rounded profile

③ Not a bid item.

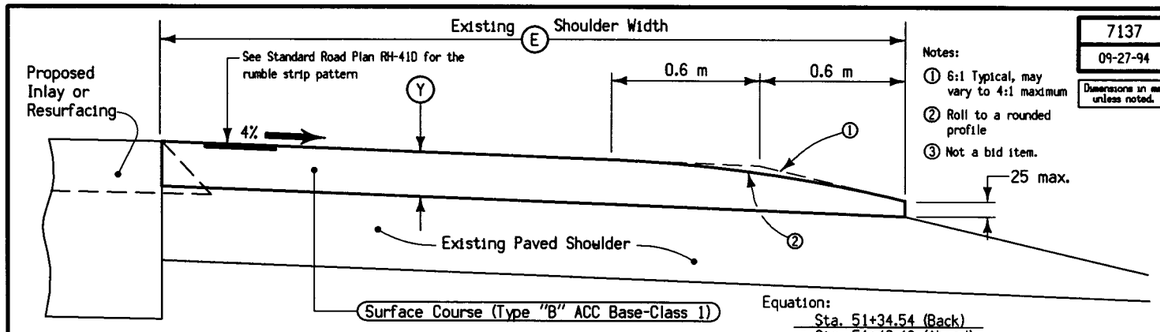

Equation:
Sta. 51+34.54 (Back)
= Sta. 51+40.48 (Ahead)

STATION TO STATION		RIGHT OR LEFT / INSIDE OR OUTSIDE	Ⓨ mm	Ⓔ m	PRIME AND TACK COAT L ③	ASPHALT CEMENT Mg	ASPHALT CEMENT CONCRETE Mg
32+00 WBL	80+46 WBL	Outside	100	3	120	3.87	64.52
32+12 EBL	80+46 EBL	Outside	150	3	180	5.75	95.91

DESIGN RATES	
ITEM	RATE
Surface Course	2325 kg/m³
Tack Coat	0.20 L/m²

ACC SHOULDER RESURFACING

RS-2
10-96

Dimensions in mm unless noted.

Notes:

① 6:1 Typical, may vary to 4:1 Maximum

② Roll to a Rounded Profile

③ 0.3 m Granular Fillet (incidental). Depth of granular fillet may vary due to erosion of material at shoulder edge.

④ Refer to Standard Road Plan RH-41D for the rumble strip pattern

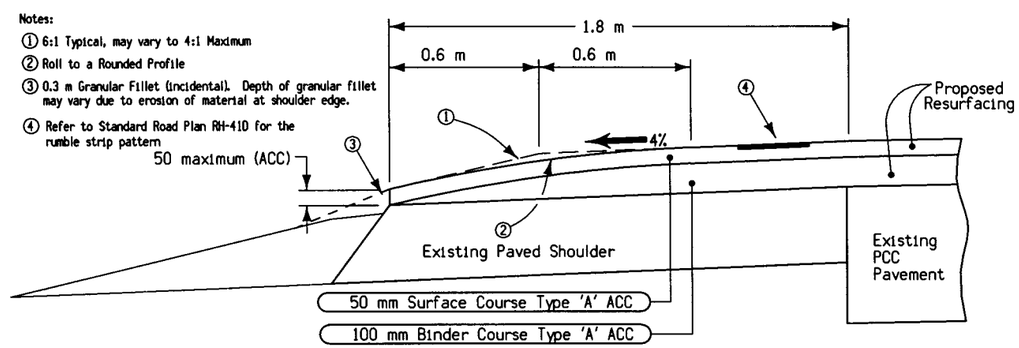

LOCATION			
ROAD IDENTIFICATION	STATION TO STATION		SIDE
I-680 EB	32+12	80+46	Inside

Equation:
Sta. 51+34.54 (Back)
= Sta. 51+40.48 (Ahead)

ACC SHOULDER RESURFACING (MEDIAN SHOULDER)

7135
09-27-94

Dimensions in mm unless noted.

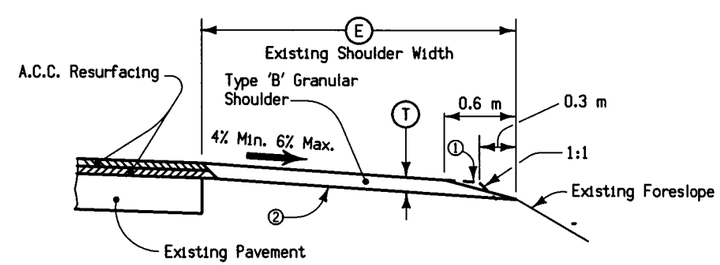

(1) Inside Shoulder
(2) Outside Shoulder

Notes:

Quantities have been determined on the basis of a design density of 2325 kilograms per cubic meter.

① Place and compact material to the dashed lines; then blade and shape to foreslope that portion above the solid line in the outer 0.6 meter and roll with loaded truck tire.

② Existing shoulder surface to be shaped to a uniform cross slope prior to placing granular shoulder material. Shape to ensure the thickness of the granular shoulder material is not less than the thickness of the resurfacing. Shaping shall not be paid for separately, but shall be considered incidental to price bid for granular shoulder material.

③ Megagrams per side per station.

LOCATION				Mg ③	Ⓣ mm	Ⓔ m
ROAD IDENTIFICATION	STATION TO STATION		SIDE			
I-680 EB	80+46	80+89	(2)	112	150	3
I-680 EB	80+46	80+89	(1)	62	150	1.8
I-680 WB	80+46	82+98	(2)	83	100	3
I-680 WB	80+46	82+98	(1)	46	100	1.8

TYPICAL SECTION FOR TYPE 'B' GRANULAR SHOULDER

ADJACENT TO ASPHALT CEMENT CONCRETE RESURFACING

D1

RO-3

Dimensions in mm unless noted.

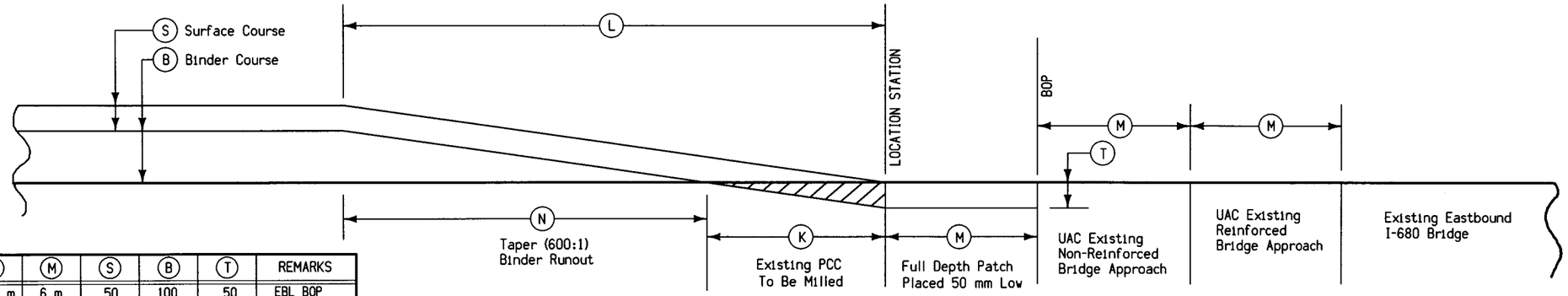

LOCATION STATION	L	K	N	M	S	B	T	REMARKS
32+18	90 m	30 m	60 m	6 m	50	100	50	EBL BOP

DETAILS OF RUNOUT AT BRIDGE OR PAVEMENT (Binder Only)

RO-2

Dimensions in mm unless noted.

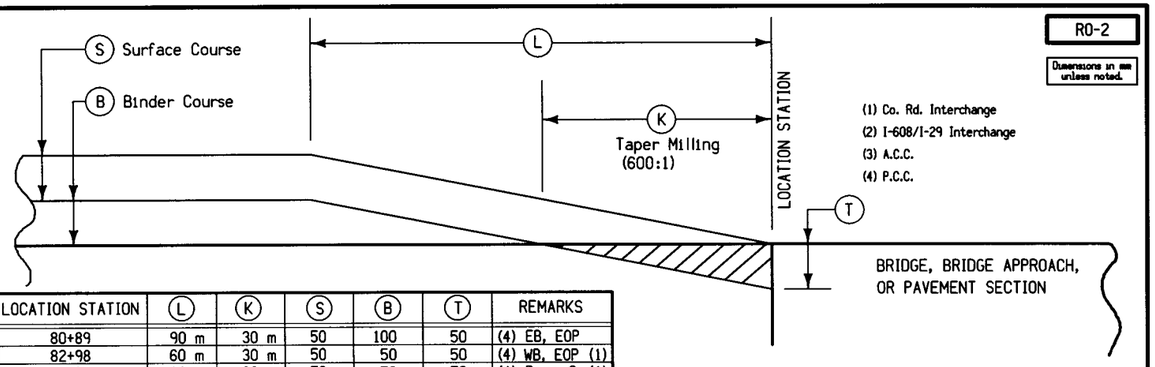

(1) Co. Rd. Interchange
(2) I-608/I-29 Interchange
(3) A.C.C.
(4) P.C.C.

LOCATION STATION	L	K	S	B	T	REMARKS
80+89	90 m	30 m	50	100	50	(4) EB, EOP
82+98	60 m	30 m	50	50	50	(4) WB, EOP (1)
3447+79	60 m	30 m	50	50	50	(4) Ramp C (1)
1447+38	60 m	30 m	50	50	50	(4) Ramp A (1)
2447+18	60 m	30 m	50	50	50	(4) Ramp B (1)
4446+76	60 m	30 m	50	50	50	(4) Ramp D (1)
8382+75	60 m	30 m	50	50	50	(4) Loop H (2)
3374+98	60 m	30 m	50	50	50	Ramp C (2) (3)

DETAILS OF RUNOUT AT BRIDGE OR PAVEMENT (Binder Only)

2616A
Modified

Dimensions in mm unless noted.

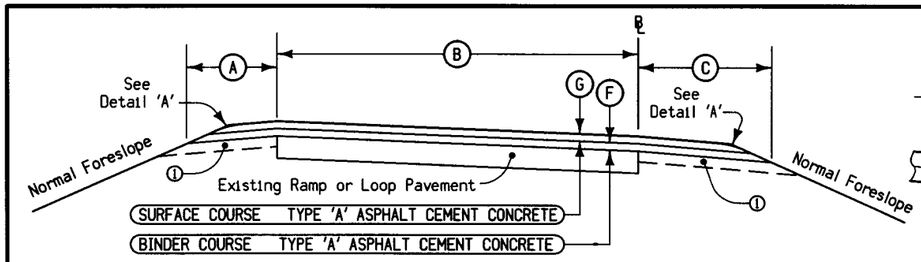

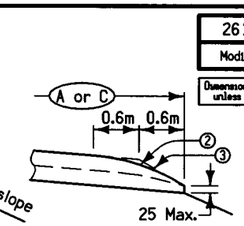

DETAIL 'A'

TYPICAL CROSS SECTION ACC RESURFACING RAMP or LOOP

DESIGN RATES	
ITEM	RATE
Surface Course	2325 kg/m³
Binder Course	2325 kg/m³
Tack Coat	0.20 L/m²

INTERCHANGE	RAMP/ LOOP IDENT.	DENSITY 94%	DENSITY 95%	DENSITY 96%	A m	B m	C m	G mm	F mm
I-680/Co. Rd.	A,B,C,D		X		1.2	4.8	1.8	50	50
I-680/I-29	C			X	1.2	4.8	1.8	50	50

Note:

Normal section shown may be appropriately modified at areas specifically designated by the engineer, such as intersections or superelevated curves.

Section view is in the direction of traffic.

Refer to other drawings for details of shoulder design and construction.

1 Existing Shoulder
2 Roll to a rounded profile
3 6:1 typical, may vary to 4:1 maximum

RO-10

Dimensions in mm unless noted.

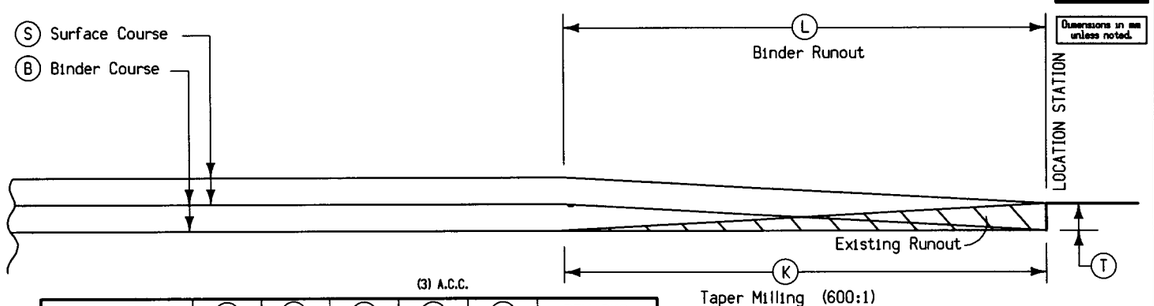

(3) A.C.C.

LOCATION STATION	L	K	S	B	T	REMARKS
32+00	60 m	30 m	50	50	50	(3) WB, BOP
78+17	60 m	30 m	50	50	50	(3) WB, BRIDGE
78+96	60 m	30 m	50	50	50	(3) WB, BRIDGE
78+17	90 m	30 m	50	100	50	(3) EB, BRIDGE
78+96	90 m	30 m	50	100	50	(3) EB, BRIDGE

DETAILS OF TAPER MILLING WITH BINDER RUNOUT AT E.O.P.

2616B
Modified

Dimensions in mm unless noted.

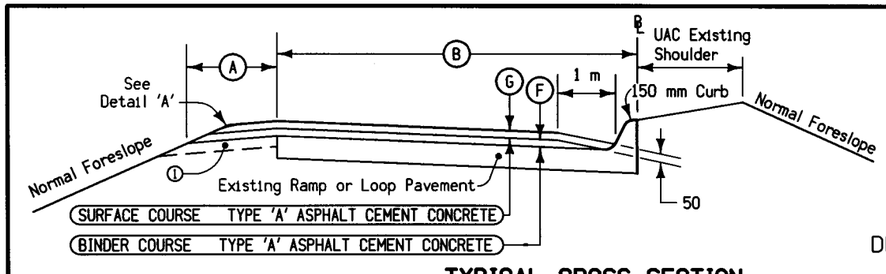

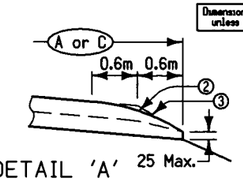

DETAIL 'A'

TYPICAL CROSS SECTION ACC RESURFACING RAMP or LOOP

DESIGN RATES	
ITEM	RATE
Surface Course	2325 kg/m³
Binder Course	2325 kg/m³
Tack Coat	0.20 L/m²

INTERCHANGE	RAMP/ LOOP IDENT.	DENSITY 94%	DENSITY 95%	DENSITY 96%	A m	B m	C m	G mm	F mm
I-680/I-29	H			X	1.2	5.5		50	50

Note:

Normal section shown may be appropriately modified at areas specifically designated by the engineer, such as intersections or superelevated curves.

Section view is in the direction of traffic.

Refer to other drawings for details of shoulder design and construction.

1 Existing Shoulder
2 Roll to a rounded profile
3 6:1 typical, may vary to 4:1 maximum

DESIGN TEAM	ABRAMS/MACKEY/HALVERSON	METRIC		POTTAWATTAMIE	COUNTY	PROJECT NUMBER	IM-680-1(126)00--13-78	SHEET NUMBER	B.02

15-NOV-1996 09:18 gmackey /usr/svr1/usr4/ord/5a/k78680126.b01

D1

Dimensions in mm unless noted.

9001
10-31-95

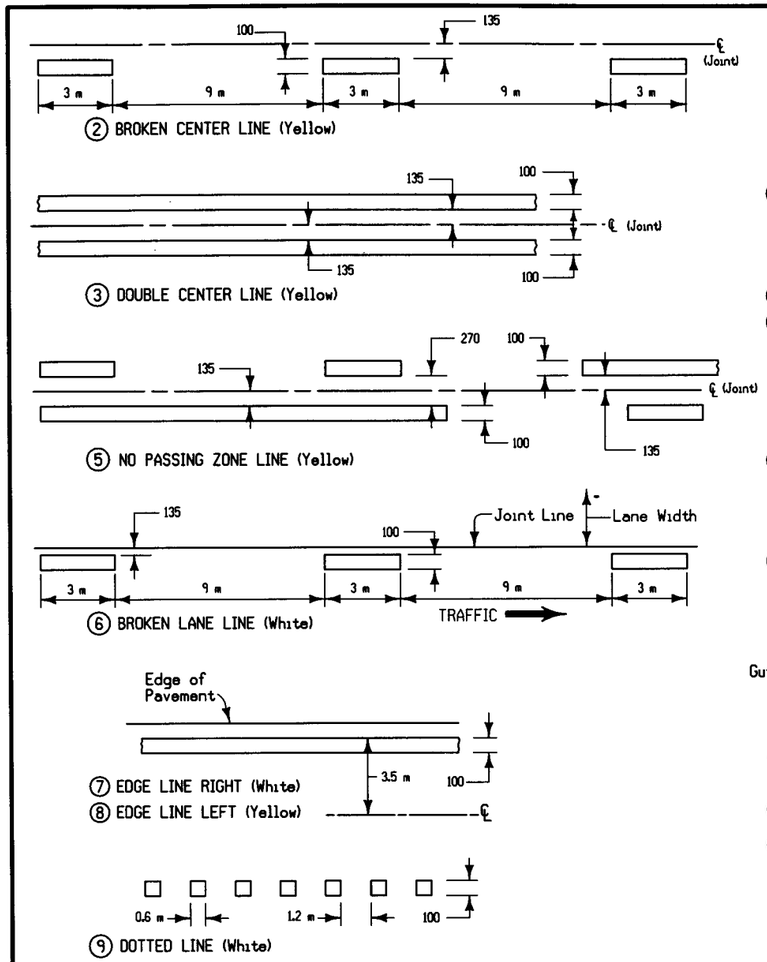

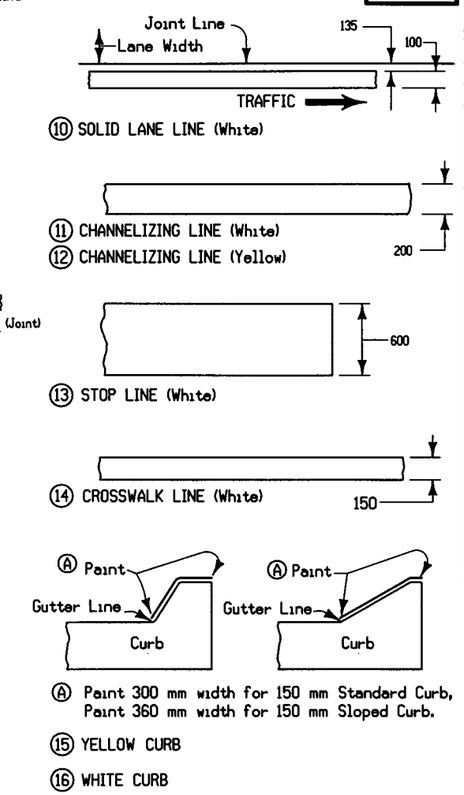

STANDARD TYPES OF PAVEMENT MARKINGS

RO-3

Dimensions in mm unless noted.

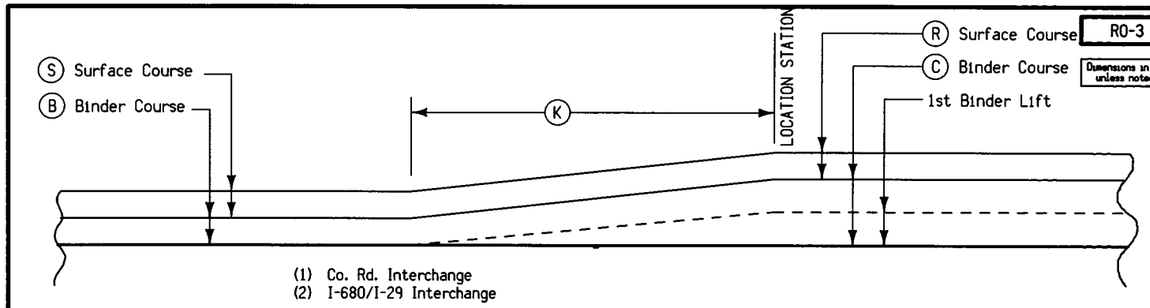

LOCATION STATION	Ⓚ	Ⓢ	Ⓑ	Ⓡ	Ⓒ	REMARKS
2442+85	30 m	50	50	50	100	Ramp B (1)
4452+50	30 m	50	50	50	100	Ramp D (1)
8560+98	30 m	50	50	50	100	Loop H (2)

DETAILS OF RESURFACING TRANSITION

FDP-1
- -

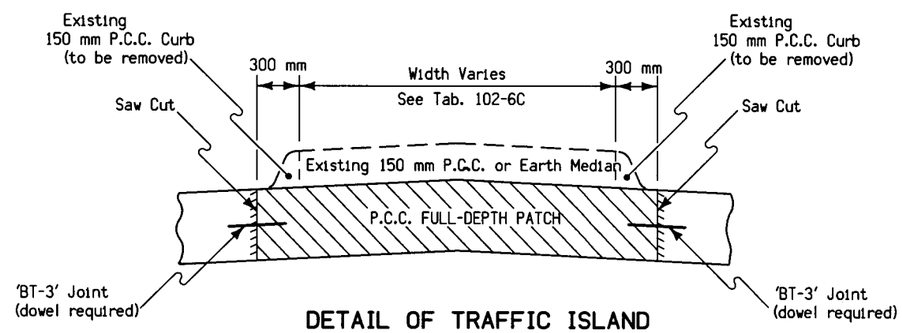

DETAIL OF TRAFFIC ISLAND REMOVAL BY FULL-DEPTH PATCH

Note: Removal of 150 mm Integral Curb and raised median to be incidental to Full-Depth Patch.

9105
06-06-95

Dimensions in mm unless noted.

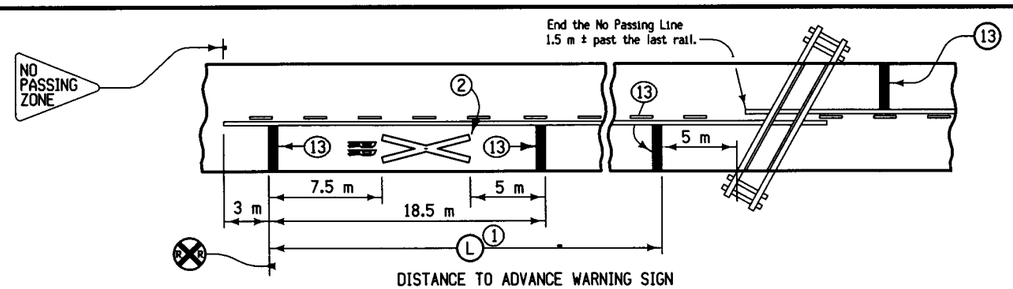

DISTANCE TO ADVANCE WARNING SIGN

POSTED SPEED LIMIT	Ⓛ①
30 mph	100 m
35 mph	120 m
40 mph	145 m
45 mph	170 m
50 mph	190 m
55 mph	215 m

On multi-lane roads the transverse bands shall extend across all approach lanes, and individual RRX symbols shall be used in each approach lane.

① Minimum Distance - may be increased to fit conditions at individual crossings.

② Refer to Typical Detail 9005 for symbol layout.

⑬ Refer to Typical Detail 9001

STANDARD PAVEMENT MARKING AT RAILROAD AND HIGHWAY GRADE CROSSING WITHOUT GATES

9301
12-03-96
Dimensions in mm unless noted.

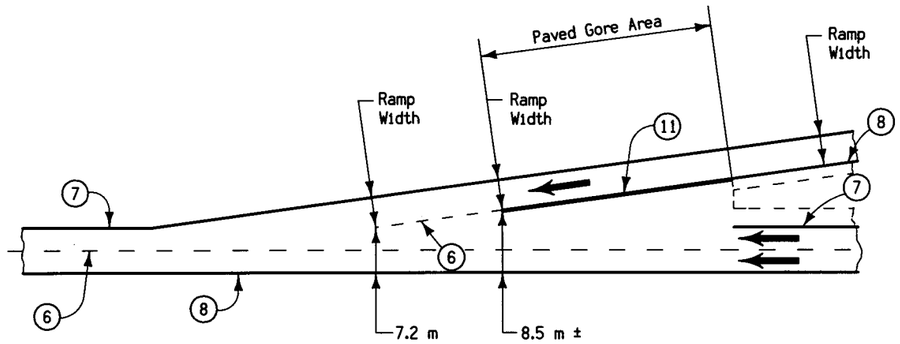

6 BROKEN LANE LINE (White)
7 EDGE LINE RIGHT (White)
8 EDGE LINE LEFT (Yellow)
11 CHANNELIZING LINE (White)

For location details, see Typical Detail 9001

PAVEMENT MARKINGS
Tapered Acceleration Lane

9302
12-03-96
Dimensions in mm unless noted.

6 BROKEN LANE LINE (White)
7 EDGE LINE RIGHT (White)
8 EDGE LINE LEFT (Yellow)
9 DOTTED LINE (White)
11 CHANNELIZING LINE (White)

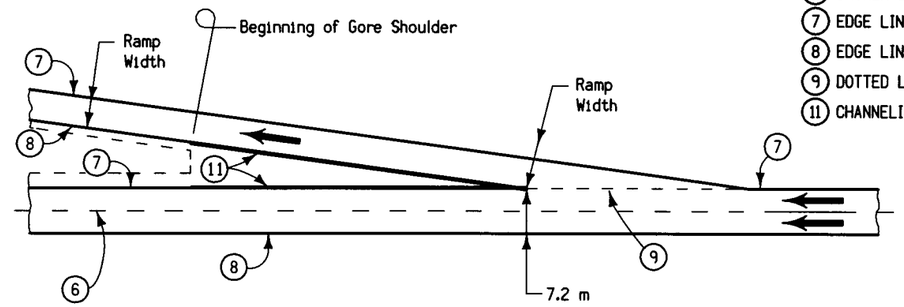

For location details, see Typical Detail 9001

PAVEMENT MARKINGS
Tapered Deceleration Lane

9002
06-06-95
Dimensions in mm unless noted.

EACH UNIT = 97.5 mm

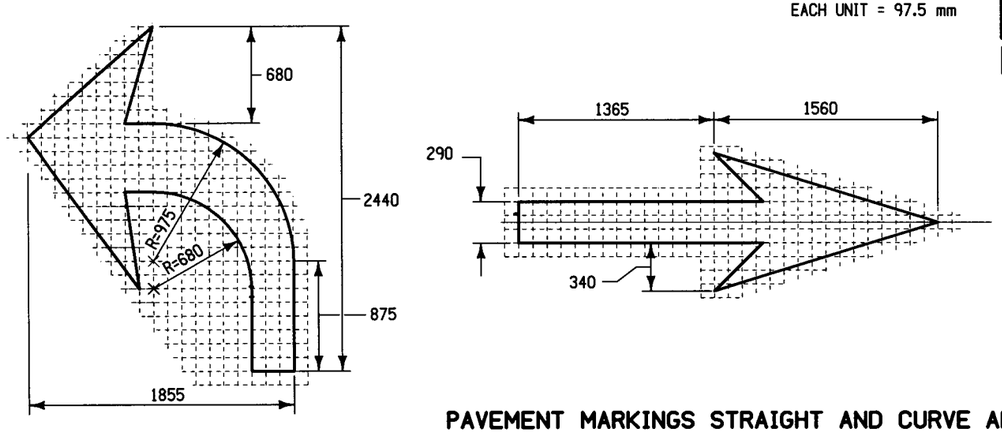

PAVEMENT MARKINGS STRAIGHT AND CURVE ARROWS

9005
06-06-95
Dimensions in mm unless noted.

Each Unit = 250 mm

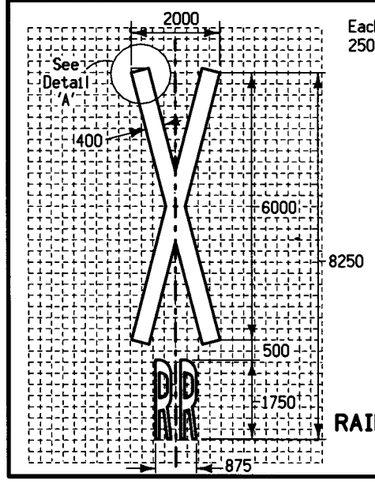

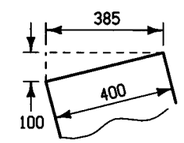

DETAIL 'A'

For size and shape of symbol 'R', refer to Detail 9011

RAILROAD CROSSING SYMBOL

9011
06-06-95
Dimensions in mm unless noted.

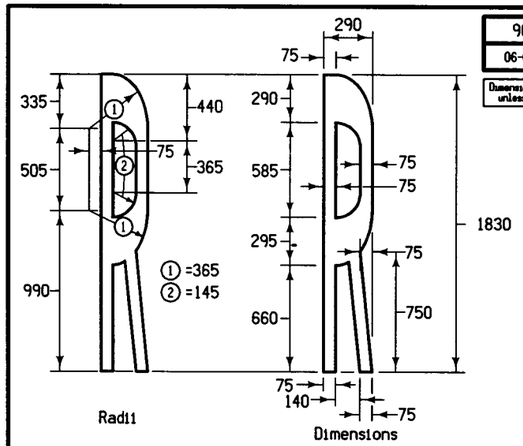

"R" CROSSING SYMBOL

DESIGN TEAM ABRAMS/MACKEY/HALVERSON	METRIC		POTTAWATTAMIE COUNTY	PROJECT NUMBER IM-680-1(126)00--13-78	SHEET NUMBER B.04

14-NOV-1996 15:52 gmackey /usr/svr1/usr4/ord/5a/k78680126.b01

D1

ESTIMATED PROJECT QUANTITIES

100-1A
09-27-94

CONSTRUCTION USE ONLY	ITEM CODE	ITEM	UNIT	TOTAL	AS BUILT QUAN.
	2102--200100	EMBANKMENT-IN-PLACE	M3	726	
	2102--230100	SPECIAL BACKFILL MAT'L	MG	689	
	2121--200100	GRANULAR SHLD TYPE B	MG	390	
	2212--100100	CLEAN+PREPARATION OF BASE	KM	12.261	
	2212--100200	PATCH FULL-DEPTH REPAIR	M2	295	
	2212--100300	PATCH PARTIAL-DEPTH REPAIR	M2	454	
	2212--100400	PATCH BY COUNT (REPAIR)	EACH	418	
	2212--100600	SURF PATCH	MG	50	
	2214--101200	PAV'T SCARIFICATION	M2	4 284	
	2303--120214	ACC BASE TYPE B CL 1 45% CR	MG	8 083	
	2303--130198	ACC BINDER CRS TYPE A 19 MM 85% CR	MG	19 002	
	2303--161981	ACC SURF CRS TYPE A 19 MM 85% CR 223-11	MG	13 064	
	2303--200000	ASPH CEMENT	MG	2 249	
	2303--500000	FABRIC REINFORCEMENT	M2	1 893	
	2303--700000	ACC PAV'T SAMPLE	LS	1	
	2399--100130	MEDIAN CROSSOVER PAV'T	M2	448	
	2417--060375	CMP RDWY CULV 375 MM	M	33.2	
	2417--430375	BEVELED PIPE+GUARD 375 MM	EACH	2	
	2505--000100	RMVL OF G'RAIL	M	300.99	
	2505--000200	RMVL OF POST	EACH	176	
	2505--000300	RMVL OF G'RAIL END ANCHORAGE	EACH	24	
	2505--000410	G'RAIL POST BEAM	EACH	125	
	2505--000500	G'RAIL FORMED STEEL BEAM	M	194.31	
	2505--000600	G'RAIL FORMED STEEL THRIE BEAM	M	47.62	
	2505--100331	G'RAIL END ANCHOR BEAM RE-33A	EACH	2	
	2505--100332	G'RAIL END ANCHOR BEAM RE-33B	EACH	4	
	2505--100690	G'RAIL END ANCHORAGE BEAM RE-69	EACH	1	
	2505--100700	G'RAIL END ANCHORAGE BEAM RE-70	EACH	13	
	2505--110200	OBJECT MARKER TYPE 2	EACH	18	
	2505--110300	OBJECT MARKER TYPE 3	EACH	11	
	2510--001000	RMVL OF OLD PAV'T	M2	221	
	2518--200100	CROSSOVER BARRICADE	EACH	1	
	2520--100100	FIELD LABORATORY	EACH	1	
	2524--610100	DELINEATOR SINGLE WHITE	EACH	34	
	2525--002000	SILT FENCE	M	100	
	2525--003000	SILT FENCE FOR DITCH CHECK	M	100	
	2527--101000	PAINTED PAV'T MARK	M	31 610	
	2527--104000	PAINTED SYMBOL+LEGEND	EACH	7	
	2527--108000	PAV'T MARK REMOVED	M	183	
	2528--101000	TRAFFIC CONTROL	LS	1	
	2528--107000	FLAGGER	WDAY	50	
	2529--101100	FULL-DEPTH FINISH PATCH BY COUNT	EACH	8	
	2529--101200	FULL-DEPTH FINISH PATCH BY AREA	M2	12	
	2529--102100	CD JNT ASSEMBLY	EACH	21	
	2529--104000	SUBBASE (PATCH)	M2	105	
	2529--201000	JOINT ASSEMBLY EF	EACH	8	
	2533--100000	MOBILIZATION	LS	1	

For Traffic Control Plan
Refer to Sheet No. C.02

ESTIMATE REFERENCE INFORMATION

100-4
09-27-94

Data listed below is for informational purpose only and shall not constitute a basis for any extra work orders.

ITEM CODE	DESCRIPTION
2527--104000	Item includes 5 RR symbols in the EB lanes and 2 RR symbols in the WB lanes.
2529--101100 2529--101200 2529--201000	See Tabulation 102-6C and Design Detail 532-9.
2529--102100 2529--104000	See Tabulation 102-6C. Items increased 15% for irregularities.

ESTIMATE REFERENCE INFORMATION

100-4
09-27-94

Data listed below is for informational purpose only and shall not constitute a basis for any extra work orders.

ITEM CODE	DESCRIPTION
	Project Description: This project involves ACC resurfacing, patching, and guardrail updates.
2102--200100	See Tabulation 107-23. Material to be obtained by the contractor outside of the existing ROW.
2102--230100	Item is for median crossover. Refer to Modified Detail Sheet 531-2. Also includes 45 Mg for crossover between WBL I-680 & Ramp "A" (Sta. 80+16±), refer to Sheet U.07.
2121--200100	See Typical 7135 for locations.
2212--100100	Item includes 2.449 km for ramps.
2212--100200 2212--100300 2212--100400	See Tabulations 102-6C and 102-14. Quantity increased 15% for discretionary patches.
2212--100600	Locations to be determined in the field.
2214--101200	For milling runouts. Milled material may be included in granular shoulders and special backfill. Any excess to be disposed as per Standard Notes 213-1, 213-7. No payment for overhaul will be allowed.
2303--120214	See Typical 7137. Quantity increased 5% for irregularities.
2303--130198	See Typicals IM-1, 2616A, and 2616B. Includes 2090 Mg for ramps. Quantity includes 5% for irregularities.
2303--161981	See Typicals IM-1, 2616A, and 2616B. Includes 2184 Mg for ramps. Quantity includes 5% for irregularities.
2303--200000	Rate estimated at 5.50% for surface, binder courses and 6.00% for base.
2303--500000	See Tabulation 106-7.
2399--100130	See Modified Detail 531-2. Item includes 100 sq. meters for crossover between WBL I-680 & Ramp "A" (Sta. 80+16±), refer to Sheet U.07.
2417--060375 2417--430375	See Modified Detail 531-2 and Design Details 500-6, 500-12.
2505--000100 2505--000200 2505--000300	See Tabulation 110-7. Items to be disposed by the contractor as per Standard Note 213-1.
2505--000410 2505--000500 2505--000600 2505--100331 2505--100332 2505--100690 2505--100700	See Tabulations 108-8A and 108-8B.
2505--110200 2505--110300 2524--610100	See Tabulation 108-17. Removal of existing delineators and object markers to be incidental.
2510--001000	See Tabulation 110-1 and modified Detail 531-2. Disposal to be as per Standard Notes 213-1, 213-7.
2518--200100	Item is for median crossover at Sta. 80+24±. Refer to Design Detail 540-13.
2525--002000 2525--003000	Placement locations to be determined in the field.
2527--101000 2527--108000	See Tabulation 108-22.

METRIC/ENGLISH STATIONING CROSS REFERENCE

101-14
12-03-96

LOCATION	METRIC STATION	ENGLISH STATION
B.O.P.	32+00	104+99
	32+00	105+00
	33+53	110+00
	35+05	115+00
	36+58	120+00
	38+10	125+00
	39+62	130+00
	41+15	135+00
	42+67	140+00
	44+20	145+00
	45+72	150+00
	47+24	155+00
	48+77	160+00
	50+29	165+00
EQUATION	51+34.54 (BK)	168+45.57 (BK)
EQUATION	51+40.48 (AH)	168+65.06 (AH)
	51+82	170+00
	53+34	175+00
	54+86	180+00
	56+39	185+00
	57+91	190+00
	59+44	195+00
	60+96	200+00
	62+48	205+00
	64+01	210+00
	65+53	215+00
	67+06	220+00
	68+58	225+00
	70+10	230+00
	71+63	235+00
	73+15	240+00
	74+68	245+00
	76+20	250+00
	77+72	255+00
	79+25	260+00
	80+77	265+00
	82+30	270+00
E.O.P.	82+98	272+24
CO. RD. INTERCHANGE		
RAMP A	1560+00	1448+76.81
	1565+00	1450+29.21
RAMP B	2545+00	2444+19.61
	2550+00	2445+72.01
RAMP C	3540+00	3442+67.21
	3545+00	3444+19.61
	3550+00	3445+72.01
	3555+00	3447+24.41
RAMP D	4555+00	4447+24.41
	4560+00	4448+76.81
	4565+00	4450+29.21
	4570+00	4451+81.61
I-680/ I-29 INTERCHANGE		
RAMP C	3545+00	3404+67.61
	3550+00	3406+20.02
LOOP H	8565+00	8380+77.22
	8570+00	8382+29.62

ROADWAY DESIGN

LICENSED PROFESSIONAL ENGINEER
SCOTT E. HANSON
11578
IOWA

I hereby certify that this plan was prepared under my supervision and that engineering decisions with regard to the design were made by me or by other duly Registered Professional Engineers under the laws of the State of Iowa.

Name Scott E. Hanson

Iowa Registration No. 11578 Date 1-18-96

09-27-94 203-4

The contractor is encouraged to take full advantage of specification 1105.15 - Value Engineering Incentive Proposal. A pamplet and conceptual proposal form will be available at the preconstruction conference.

10-31-95 204-1

The installation of each continuous piece of guardrail shall be completely functional within five consecutive working days. The following shall apply unless modified by the engineer:

Grading work, if necessary, shall be completed prior to the removal of any existing guardrail or the installation of new guardrail.

Removal of any existing guardrail and installation of new posts and beam rail except for the approach end section, shall be completed on the same working day. Beam rail shall be fully connected to all posts and protected with a Type E terminal section plus Type II barricade with Type A warning light.

Not later than the next working day, concrete for the end anchorage (RE-53) shall be poured.

09-27-94 204-2

All holes resulting from operations of the contractor, including removal of guardrail posts, fence posts, utility poles, or foundation studies, shall be filled and consolidated to finished grade as directed by the engineer to prevent future settlement. The voids shall be filled as soon as practical - preferably the day created and not later than the following day. Any portion of the right-of-way or project limits (including borrow areas and operation sites) disturbed by any such operations shall be restored to an acceptable condition. This operation shall be considered incidental to other bid items in project.

09-27-94 204-4

All guardrail materials that are removed and not reused on this project shall become the property of the contractor. Any material to be used on this project that is damaged due to the carelessness of the contractor shall be replaced at the contractor's expense without cost to the State of Iowa.

09-27-94 213-1

It shall be the contractor's responsibility to provide waste areas or disposal sites for excess material (excavated material or broken concrete) which is not desirable to be incorporated into the work involved on this project. No payment for overhaul will be allowed for material hauled to these sites. No material shall be placed within the right-of-way, unless specifically stated in the plans or approved by the engineer.

09-27-94 213-7

Unless otherwise directed or authorized, all asphaltic cement concrete and other bituminous materials which are not specifically addressed or described in the plans shall become the property of the contractor.

The contractor, in accordance with current rules and regulations of the Iowa Department of Natural Resources, may:

1. With the approval of the Engineer, blend or otherwise process the material for use with shoulder or special backfill aggregate, for use on the project.
2. With the approval of the Engineer, place with material in areas designated by the Engineer as Soil Aggregate Subbase without extra charge.
3. Remove the material from the project and stockpile for the contractor's future use.

09-27-94 221-4

In order to avoid any unnecessary surface breaks or premature spalling, the contractor is cautioned to exercise extreme care when performing any of the necessary saw cutting operations for the proposed pavement removal.

09-27-94 223-11

The surface course shall be a 19 millimeter mix. At least 95% of the aggregate retained on the 4.75 millimeter sieve shall be Type 4 or better frictional classification aggregate and at least 35% retained on the 4.75 millimeter sieve shall be Type 2 or better frictional classification aggregate. Frictional classification shall be in accord with Materials Instructional Memorandum T-203.

The percentage of crushed particles shall be:		Marshall Compaction Requirements:	
Surface	85 %	85	Blow
Binder	85 %	85	Blow
Base (Including Widening)	45 %	45	Blow

09-27-94 232-5

The contractor shall not disturb desirable grass areas and desirable trees outside the construction limits. The contractor will not be permitted to park or service vehicles and equipment or use these areas for storage of materials. Storage, parking and service area(s) will be subject to the approval of the resident engineer.

09-27-94 241-1

Road contractor is to use due caution in working over and around all tile lines. Breaks in the tile line due to the contractor's carelessness are to be replaced at his expense without cost to the State of Iowa. Any tile lines broken or disturbed by our cut lines will be replaced as directed by the engineer in charge of construction and at the State of Iowa's expense.

09-27-94 251-2

The contractor is hereby notified that removal of any existing traffic markers, warning devices or guardrail barriers shall be scheduled subject to the approval of the Engineer. The contractor may be required to place temporary warning devices at certain locations where replacement features are not installed the same day during which any such removals take place.

09-27-94 253-1

Contractor is prohibited from using any established or other type median crossover on this project unless specifically designated for the contractor's use by this plan.

09-27-94 262-1

It shall be the contractor's responsibility to use caution in excavation work around any automatic railroad crossing signals in order to avoid disturbing any buried utility cable which may be in place near such signals.

08-20-96 232-3

EROSION CONTROL:

Following completion of work on this project seeding, fertilizing, and mulching of all disturbed areas shall be done as directed by the Engineer.

SEEDING:

1.5 kilograms of Fescue, Kentucky 31 or Fawn per 100 square meters.

FERTILIZER:

8.5 kilograms of 13-13-13 (or equivalent) chemically combined fertilizer per 100 square meters.

MULCH:

35 kilograms of dry cereal straw per 100 square meters. All mulch to be consolidated into the soil with the mulch stabilizer.

The preparation of the seedbed, furnishing and application of seed, fertilizer, and mulch to all disturbed areas on this project shall be considered incidental to work on this project and no extra compensation will be allowed.

STAGING NOTES

108-26
09-27-94

For Loop "H" I-680/I-29 Interchange

Stage 1. A. Maintain existing traffic.
B. Build median crossover as shown on Detail Sheets U.03 & U.07.

Stage 2. A. Move Loop "H" traffic (I-680 EB) to passing lane of the Eastbound lanes of I-680, left at the crossover, and then to Ramp "A". The passing lane is to be used as a Left turn lane and the driving lane to be used as the thru Eastbound Lane to Crescent. Refer to Traffic Control Detail Sheet J.04 for details.

B. Patch and resurface Loop "H" of the I-680/I-29 interchange.

C. Place permanent pavement markings as necessary to allow for traffic.

Stage 3. A. Open Loop "H" (I-680/I-29 Interchange) to regular traffic movements. The Loop "H" traffic may be affected by the resurfacing of I-680 M.L., but traffic control will be handled by Standard Road Plans RS-64A, RS-64B and RS-65B.

TRAFFIC CONTROL PLAN

108-23
09-27-94

1. Through traffic will be maintained on the project at all times.
2. Traffic control on this project shall be found in accordance with the RS series of Standard Road Plans found in Tab. 105-4 on the Title Sheet and/or appropriate Detail Sheets included in the plans. For additional complementary information, refer to Part VI of the Manual on Uniform Traffic Control Devices and the current Standard Specifications.
3. Where a patch extends into two traffic lanes, work shall be completed in the median lane first.
4. The contractor shall coordinate traffic control with other projects in the area.
5. All traffic control devices shall be furnished, erected, maintained, and removed by the contractor.
6. Where possible, all post mounted signs shall be placed at least 0.6 meters beyond the curb or edge of shoulder.
7. The location for storage of equipment by the contractor during non-working hours shall be as approved by the engineer in charge of construction.
8. Parking of private vehicles on Interstate right-of-way will not be allowed. Parking of unattended equipment within the median or storage of equipment within 15 meters of the edge of pavement will not be allowed.
9. The engineer may require modifications to the pavement marking details shown. Conflicting permanent edge lines, center lines, or lane lines shall be removed. As applicable, permanent edge lines, center lines, and lane lines shall be placed before the roadway is returned to normal traffic. The current Standard Specifications and supplemental specifications shall apply.
10. Proposed sign spacing may be modified as approved by the engineer to meet existing field conditions or to prevent obstruction of the motorist's view of permanent signing.
11. Permanent signing that conveys a message contrary to the message of the temporary signing and not applicable to the working conditions shall be covered by the contractor when directed by the engineer.
12. Proposed changes in the traffic control plan shall be reviewed with the Office of Construction before changes are made.
13. Until January 1, 1998 the contractor will be allowed to use the old or new version of the following signs when either sign is called for in the contract documents. (The exception is that the new Symbol Signal Ahead sign shall be used instead of the old word message sign on signalized haul roads.) New and old versions of a particular sign may not be used together on the same project. All work performed after January 1, 1998 shall use the new version of the signs.

OLD SIGN	ID	NEW SIGN	ID
SIGNAL AHEAD	W3-3	SYMBOL SIGNAL AHEAD	W3-3
LOW SHOULDER	W8-9	SHOULDER DROP-OFF	W8-9a
CENTERLINE DROP-OFF	Special	UNEVEN LANES	W8-11
BE PREPARED TO STOP	Special	BE PREPARED TO STOP	W20-7b

TABULATION OF SPECIAL EVENTS

102-15
09-27-94

EVENT	LOCATION	DATE
NONE PROVIDED		

① Includes 2 - 3.810 m Thrie Beam Sections and 1 - 1.905 m "W" to Thrie Beam Transition Section
② Not a bid item

TABULATION OF STEEL BEAM GUARDRAIL FOR STANDARD ROAD PLANS RE-63, RE-65

108-8A
03-26-96

LOCATION NO.	LOCATION STATION	STANDARD ROAD PLAN	CASE	FORMED STEEL BEAM GUARDRAIL LENGTH: (A) "W" Beam	(A) STS ① Thrie Beam	(H) Thrie Beam	(T) STS ① Thrie Beam	(T) "W" Beam	TOTAL "W" BEAM	TOTAL THRIE BEAM	BEAM GUARDRAIL POSTS (mm) With 200 x 200 mm Spacer Blocks: 250x250x1830	200x200x1830	CRT 150x200x1830	Terminal ② 140x190x1080	POST & ADAPTOR RE-37	ANCHOR SYSTEM Type	No.	REMARKS
				m	9.525 m	m	9.525 m	m	m	m	No.	No.	No. (4)	No. (2)	No.			
1	32+00 WB Lanes	RE-65	U	11.43					11.43		3	4	4	2		RE-69	1	(A)
					9.525					9.525						RE-70	1	
2	1046+68 South End	RE-65	W	19.05				19.05	38.10			10	8	4		RE-70	2	(B)
3	1047+80 North End	RE-65	W	19.05				19.05	38.10			10	8	4		RE-70	2	(B)
4	78+56 EB Lanes West End	RE-65	U	7.62					7.62				4	2		RE-70	1	Replace end anchorage only
5	78+56 WB Lanes East End	RE-65	U	7.62					7.62				4	2		RE-70	1	Replace end anchorage only
6	80+90 EB & WB Lanes	RE-63	IC	11.43					45.72		16	16	16	8		RE-70	4	4 Locations in area of Railroad Tracks
					9.525					38.10						RE-33B	4	

(A) New holes to be drilled at Bridge Connection for RE-69 (Thrie Beam) connection.
(B) The first 7.62 m of guardrail that is attached to the bridge on both ends is to remain in place and the new guardrail attached to the existing.

① Not a bid item

TABULATION OF STEEL BEAM GUARDRAIL FOR STANDARD ROAD PLANS RE-54, RE-55 OR RE-56

108-8B
04-30-96

LOCATION NO.	LOCATION STATION	STANDARD ROAD PLAN	CASE	(L2) Length	FORMED STEEL "W" BEAM GUARDRAIL: (A) Length	(H) Length	(T) Length	TOTAL Length	BEAM GUARDRAIL POSTS (mm) Without Spacer Blocks: 200x200x1830	150x200x1830	150x150x1830	With 200 x 200 Spacer Blocks: 200x200x1830	CRT 150x200x1830	Terminal ① 140x190x1080	POST & ADAPTOR RE-37	ANCHOR SYSTEM Type	No.	REMARKS
				m	m	m	m	m	No.	No.	No.	No.	No. (4)	No. (2)	No.			
1	74+00 Lt. EB Lanes	RE-55	D	2.34	19.05	3.81		22.86				7	4	2		RE-70	1	Overhead Sign Trusses
																RE-33A	1	
2	74+00 Rt. EB Lanes	RE-55	D	2.36	19.05	3.81		22.86				7	4	2		RE-70	1	Overhead Sign Trusses
																RE-33A	1	

Applies to both 2-way & 1-way traffic

DESIGN TEAM	ABRAMS/MACKEY/HALVERSON	METRIC		POTTAWATTAMIE COUNTY	PROJECT NUMBER	IM-680-1(126)00--13-78	SHEET NUMBER	C.03

REMOVE or REMOVE AND REINSTALL BEAM GUARDRAIL

110-7A
03-26-96

LOCATION			STEEL BEAM GUARDRAIL		POST (mm)					END ANCHORAGE			REMARKS
						REMOVE & REINSTALL							
NO.	STATION	SIDE	REMOVE m	REMOVE & REINSTALL m	REMOVE No.	200x200 No.	250x250 No.	150x200 No.	150x150 No.	REMOVE No.	REMOVE & REINSTALL No.	TYPE	
1	32+00 WB	LT.	19.05		13					1		RE-52	
2	47+24	MEDIAN	38.10		20					2		RE-52	
										2		RE-33	
3	1047+24	BOTH	76.20		40					4		RE-33	Co. Rd. over I-680
4	78+16 EB	RT.	7.62		5					1		RE-52	End Anchorage Only
5	78+96 WB	LT.	7.62		5					1		RE-52	End Anchorage Only
6	78+96 EB	RT.	15.24		9					1		RE-52	
7	80+91 EB & WB	LT&RT	76.20		52					4		RE-52	Remove all Guardrail at RR
										4		RE-33	
8	74+00 EB	LT&RT	60.96		32					2		RE-52	Sign Truss
										2		RE-33	

TABULATION OF GRADING FOR GUARDRAIL INSTALLATIONS

107-23
10-31-95

* Refer to Standard Road Plan RL-12, RL-14, or Typicals 4303 and 4306

LOCATION POINT		TYPE	* DIMENSIONS			CLASS 10 EXCAV.	EMBANK. IN PLACE	PIPE			REMARKS
No.	Station		(A)/(T) m	(Y) m	(Z) m	m^3	m^3	Size mm	Type	Length m	
1	32+21	1	20.95	2	13.5		38				WBL
2	1046+63 Lt.	1	24.75	3	17.2		115				Co. Rd.
3	1046+63 Rt.	1	24.75	3	17.2		115				Co. Rd.
4	1048+05 Lt.	1	24.75	3	17.2		115				Co. Rd.
5	1048+05 Rt.	1	24.75	3	17.2		115				Co. Rd.
6	73+77 Lt.	1	22.86	2	13.5		38				EBL
7	73+77 Rt.	1	22.86	2	13.5		38				EBL
8	77+98 Rt.	1	19.05	2	13.5		38				EBL
9	79+15 Lt.	1	19.05	2	13.5		38				WBL
10	80+73 Rt.	1	11.43	2	13.5		38				EBL
11	81+07 Lt.	1	11.43	2	13.5		38				WBL

TABULATION OF EXISTING PAVEMENT

102-5
09-27-94

NO.	LOCATION	EXISTING PAVEMENT Type	COARSE AGGREGATE TYPE GRAVEL	COARSE AGGREGATE TYPE CRUSHED STONE	SOURCE	DURA-BILITY CLASS	PAVEMENT THICKNESS mm	REINFORCE-MENT Type	DETAIL TYPICAL
1	MP 0.00 - MP 3.06	PCC		X	Weeping Water	1	230	None	

TABULATION OF UTILITIES

102-13
09-27-94

AT&T
4005 South 132nd Street
Omaha Nebr. 68137
Atten: Larry Meeves

Northwestern Bell Telephone Co.
100 South 19th Street 43rd Rd.
3rd Floor
Omaha Nebr. 68102

Midamerican Energy
3003 South 11th Street
Council Bluffs, Iowa 51502
Atten: Tom Budler

TABULATION OF DELINEATORS AND OBJECT MARKERS

108-17
09-27-94

Refer to Standard Plan RE-48A-B* and RE-29C * * Not a Bid Item

LOCATION	DELINEATOR	OBJECT MARKER					
				Type 3			
Station	Type*	Single White D-1W Number	Type 2 OM2-3YV Number	OM-3L Number	OM-3R Number	Offset Brackets ** Number	REMARKS
32+00	2		2		1		WB
1047+24	1	28	8	2	2		Co. Rd.
74+00±	6			1	1		Sign Trusses
80+90	8	6	8	2	2		RR Tracks

TABULATION OF FABRIC REINFORCEMENT FOR CONTROL OF REFLECTIVE CRACKING

106-7
09-27-94

STATION TO STATION		SIDE	WIDTH m	AREA m^2
I-680 Eastbound Lane		-	762.00 X 0.61	464.82
I-680 Westbound Lane		-	746.76 X 0.61	455.52
County Rd Interchange		-		
	Ramp B	-	350.52 X 0.61	213.82
	Ramp D	-	304.80 X 0.61	185.93
	Ramp A	-	445.01 X 0.61	271.46
	Ramp C	-	402.34 X 0.61	245.43
I-680/ I-29 Interchange				
	Loop H	-	91.44 X 0.61	55.78

REMOVAL OF PAVEMENT

110-1
04-30-96

* Not a bid item.

STATION TO STATION		AREA m^2	SAW CUT m*	REMARKS
80+12	80+35	221	24	(A)

(A) Area includes removal of existing median crossover and ACC shoulders. Refer to Modified Detail 531-2.

TABULATION OF FULL-DEPTH PATCHES

102-6C
04-30-96

* Not a Bid Item

LOCATION			DIMENSION	PCC PATCHES			ACC PATCHES	COMPOSITE ACC	SUBBASE (PATCHES)	75 mm P.E. SUBDRAIN OUTLET PIPE *	DOWEL ASSEMBLIES		ANCHOR LUGS REMOVAL	REMARKS
COUNT	STATION OR MILEPOST	LANE L,R or B	LENGTH x WIDTH m	WITH DOWELS m^2	WITHOUT DOWELS m^2	C R C m^2	m^2	Mg	m^2	m	'CD' Number	'CT' Number	Number	
	WEST BOUND LANE													
1	80+04	P	2.438 X 5.486	13.378					1.49					
2	80+04	D	2.438 X 6.706	16.351					1.82					
3	76+76	P	2.438 X 5.486	13.378					1.49					
4	76+76	D	2.438 X 6.706	16.351					1.82					
5	71+73	D	1.829 X 3.658	6.689					0.74					
6	70+30	D	1.829 X 3.658	6.689					0.74					
7	68+05	P	4.572 X 3.658	16.723					1.86					
8	68+05	D	4.572 X 3.658	16.723					1.86					
9	67+67	D	7.315 X 3.658	26.756					2.97		1			
10	59+93	D	1.829 X 3.658	6.689					0.74					
11	54+40	P	7.315 X 3.658	26.756					2.97		1			
12	54+40	D	3.048 X 3.658	1.239					1.24					
13	34+29	P	6.096 X 1.829	1.239					1.24					(1)
14	33+95	P	6.706 X 3.658	2.725					2.73		1			
15	33+95	D	6.706 X 3.658	2.725					2.73		1			
16	32+82	P	2.438 X 5.486	1.486										(2) (3)
17	32+82	D	2.438 X 6.706	1.817										(2) (3)
	EAST BOUND LANE													
18	32+23	D	2.438 X 6.706	1.817										(2) (3)
19	32+23	P	2.438 X 5.486	1.486										(2) (3)
20	35+77	P	7.315 X 3.658	2.973					2.97		1			
21	35+81	D	10.363 X 3.658	4.212					4.21		1			
22	35+95	D	1.829 X 3.658	0.743					0.74					
23	36+01	D	1.829 X 3.658	0.743					0.74					
24	36+80	D	1.829 X 3.658	0.743					0.74					
25	37+29	D	1.829 X 3.658	0.743					0.74					
26	37+29	P	1.829 X 3.658	0.743					0.74					
27	37+34	D	1.829 X 3.658	0.743					0.74					
28	37+34	P	1.829 X 3.658	0.743					0.74					
29	37+58	D	4.267 X 3.658	1.734					1.73					
30	37+80	D	1.829 X 3.658	0.743					0.74					
31	37+98	D	1.829 X 3.658	0.743					0.74					
32	38+16	D	1.829 X 3.658	0.743					0.74					
33	38+40	D	1.829 X 3.658	0.743					0.74					
34	39+01	D	1.829 X 3.658	0.743					0.74					
35	39+08	D	1.829 X 3.658	0.743					0.74					
36	39+69	D	1.829 X 3.658	0.743					0.74					
37	39+75	D	1.829 X 3.658	0.743					0.74					
38	39+81	D	1.829 X 3.658	0.743					0.74					
39	40+05	D	1.829 X 3.658	0.743					0.74					
40	40+11	D	1.829 X 3.658	0.743					0.74					
41	40+29	D	1.829 X 3.658	0.743					0.74					
42	41+03	D	1.829 X 3.658	0.743					0.74					
43	42+49	D	1.829 X 3.658	0.743					0.74					
44	44+44	D	1.829 X 3.658	0.743					0.74					
45	49+24	D	1.829 X 3.658	0.743					0.74					
46	54+17	D	1.829 X 3.658	0.743					0.74					
47	54+52	P	3.048 X 3.658	1.239					1.24					
48	56+81	D	4.877 X 3.658	1.982					1.98					
49	71+30	D	1.829 X 3.658	0.743					0.74					
50	71+30	P	1.829 X 3.658	0.743					0.74					
51	72+97	D	1.829 X 3.658	0.743					0.74					
52	75+87	D	1.829 X 3.658	0.743					0.74					
53	79+28	P	2.438 X 5.486	1.486										(2) (3)
54	79+28	D	2.438 X 3.658	0.991										(2)
55	79+28	D	2.438 X 3.658	0.991										(2) (4)
56	79+28	D	2.438 X 5.486	1.486										(2) (5)
	I-680 & CO. RD. INTERCHANGE													
57	4448+61.7	D	12.192 X 2.438	3.303					3.30		1			(6) RAMP "D"
58	4448+61.7	P	12.192 X 2.438	3.303					3.30		1			(7) RAMP "D"
59	2447+15.3	D	(8)	8.4										(7) (9) RAMP "B"
60	1447+39.6	D	(8)	8.4										(6) (9) RAMP "A"
	I-680 & I-29 INTERCHANGE													
61	8379+40.5	D	1.829 X 4.877	0.991					0.99					LOOP "H"
62	8379+79.5	D	17.374 X 2.743	5.295					5.30		2			(6) LOOP "H"
63	8379+79.5	D	17.374 X 2.743	5.295					5.30		2			(7) LOOP "H"
64	8381+18.5	D	24.994 X 3.658	10.157					10.16		4			(7) LOOP "H"
65	3374+06.8	D	7.315 X 2.438	1.982					1.98		1			(6) RAMP "C"
66	3374+06.8	D	7.315 X 2.438	1.982					1.98		1			(7) RAMP "C"

P= Passing Lane
D= Driving Lane

NOTES: (1) = 1.8 m PCC Shoulder
(2) = New EF
(3) = Includes PCC Shoulder
(4) = Gore
(5) = Loop
(6) = Rt. Side
(7) = Lt. Side
(8) Ramp Stop Island
(9) Refer to Typical FDP-1 for additional details

TABULATION OF PARTIAL DEPTH ACC OR PCC REPAIR PATCHES

102-14
09-27-94

LOCATION No.	Station to Station or Milepost to Milepost	Lane	TYPE ACC or PCC	DIMENSION OF PATCH Length x Width m	ESTIMATED QUANTITIES No. of Patches	m2	REMARKS
	EAST BOUND LANE						
1	32+17	D	ACC	0.61 X 6.71	1.00	4.09	(3)
2	32+17	P	ACC	0.61 X 5.49	1.00	3.34	(3)
3	33+78	D	ACC	0.61 X 0.61	1.00	0.37	
4	33+78	P	ACC	0.61 X 0.61	1.00	0.37	
5	34+70	P	ACC	0.61 X 3.66	1.00	2.23	
6	35+07	D	ACC	0.61 X 0.61	1.00	0.37	
7	35+19	D	ACC	0.61 X 0.61	1.00	0.37	
8	35+77	D	ACC	0.61 X 3.66	1.00	2.23	
9	36+07	D	ACC	0.61 X 1.22	1.00	0.74	
10	36+13	D	ACC	0.61 X 1.83	1.00	1.11	
11	36+31	D	ACC	0.91 X 1.22	1.00	1.11	
12	36+43	D	ACC	0.61 X 1.83	1.00	1.11	
13	36+68	D	ACC	0.61 X 3.66	1.00	2.23	
14	36+74	D	ACC	0.61 X 0.61	1.00	0.37	
15	36+86	D	ACC	0.61 X 0.61	1.00	0.37	
16	36+98	D	ACC	0.61 X 1.22	1.00	0.74	
17	37+11	D	ACC	0.61 X 3.66	1.00	2.23	
18	37+23	D	ACC	0.61 X 0.61	1.00	0.37	
19	37+41	D	ACC	0.61 X 1.22	1.00	0.74	
20	37+54	D	ACC	0.61 X 0.91	1.00	0.56	
21	37+56	P	ACC	0.61 X 3.66	1.00	2.23	
22	37+66	D	ACC	0.91 X 0.91	1.00	0.84	
23	37+72	D	ACC	0.61 X 3.66	1.00	2.23	
24	37+80	P	ACC	0.61 X 3.66	1.00	2.23	
25	37+86	D	ACC	0.61 X 1.22	1.00	0.74	
26	38+04	D	ACC	1.22 X 3.66	1.00	4.46	
27	38+09	D	ACC	0.91 X 3.66	1.00	3.34	
28	38+22	D	ACC	0.61 X 0.61	1.00	0.37	
29	38+28	D	ACC	0.91 X 0.91	1.00	0.84	
30	38+34	D	ACC	0.61 X 3.66	1.00	2.23	
31	38+65	D	ACC	0.61 X 0.61	1.00	0.37	
32	38+77	D	ACC	0.61 X 1.22	1.00	0.74	
33	38+83	D	ACC	1.22 X 1.22	1.00	1.49	
34	39+14	D	ACC	0.61 X 3.66	1.00	2.23	
35	39+20	D	ACC	0.61 X 1.22	1.00	0.74	
36	39+26	D	ACC	0.61 X 1.22	1.00	0.74	
37	39+59	D	ACC	0.61 X 3.66	1.00	2.23	
38	39+44	D	ACC	0.61 X 1.83	1.00	1.11	
39	39+56	D	ACC	0.61 X 1.22	1.00	0.74	
40	39+62	D	ACC	0.61 X 1.22	1.00	0.74	
41	39+99	D	ACC	0.61 X 3.66	1.00	2.23	
42	40+05	P	ACC	0.91 X 1.83	1.00	1.67	
43	40+11	P	ACC	0.61 X 2.44	1.00	1.49	
44	40+17	D	ACC	0.91 X 3.66	1.00	3.34	
45	40+35	D	ACC	0.91 X 3.66	1.00	3.34	
46	40+35	P	ACC	0.61 X 0.61	1.00	0.37	
47	40+48	D	ACC	0.61 X 0.61	1.00	0.37	
48	40+48	P	ACC	0.61 X 0.61	1.00	0.37	
49	40+60	D	ACC	0.61 X 0.91	1.00	0.56	
50	40+66	D	ACC	0.61 X 0.91	1.00	0.56	
51	40+84	D	ACC	0.91 X 0.91	1.00	0.84	
52	40+90	D	ACC	0.61 X 0.61	1.00	0.37	
53	41+03	P	ACC	0.61 X 0.61	1.00	0.37	
54	42+12	D	ACC	0.61 X 0.61	1.00	0.37	
55	42+18	D	ACC	0.61 X 0.61	1.00	0.37	
56	42+37	D	ACC	0.61 X 0.61	1.00	0.37	
57	42+55	D	ACC	1.22 X 1.22	1.00	1.49	
58	42+55	P	ACC	0.61 X 0.61	1.00	0.37	
59	42+67	D	ACC	0.61 X 0.91	1.00	0.56	
60	42+79	D	ACC	0.61 X 0.61	1.00	0.37	
61	43+71	D	ACC	0.61 X 1.83	1.00	1.11	
62	43+83	D	ACC	0.61 X 1.22	1.00	0.74	
63	43+95	D	ACC	0.61 X 0.61	1.00	0.37	
64	44+01	D	ACC	0.61 X 1.22	1.00	0.74	
65	44+50	D	ACC	0.61 X 1.22	1.00	0.74	
66	44+74	D	ACC	0.61 X 0.61	1.00	0.37	
67	44+88	D	ACC	0.61 X 0.61	1.00	0.37	
68	44+94	D	ACC	0.61 X 0.61	1.00	0.37	
69	45+11	D	ACC	0.61 X 0.61	1.00	0.37	
70	45+42	D	ACC	0.61 X 0.61	1.00	0.37	
71	45+48	D	ACC	0.61 X 0.91	1.00	0.56	
72	46+21	D	ACC	0.61 X 3.66	1.00	2.23	
73	46+24	D	ACC	0.61 X 0.61	1.00	0.37	

TABULATION OF PARTIAL DEPTH ACC OR PCC REPAIR PATCHES

102-14
09-27-94

LOCATION No.	Station to Station or Milepost to Milepost	Lane	TYPE ACC or PCC	DIMENSION OF PATCH Length x Width m	ESTIMATED QUANTITIES No. of Patches	m2	REMARKS
74	46+55	D	ACC	0.61 X 1.22	1.00	0.74	
75	46+61	D	ACC	0.61 X 0.61	1.00	0.37	
76	46+61	D	ACC	0.61 X 0.61	1.00	0.37	
77	49+96	D	ACC	0.61 X 1.22	1.00	0.74	
78	50+27	D	ACC	0.61 X 1.22	1.00	0.74	
79	50+44	D	ACC	0.61 X 0.61	1.00	0.37	
80	51+54	G	ACC	0.61 X 1.22	1.00	0.74	(1)
81	52+03	D	ACC	1.22 X 1.22	1.00	1.49	
82	52+03	P	ACC	0.61 X 0.61	1.00	0.37	
83	52+70	D	ACC	0.61 X 1.22	1.00	0.74	
84	53+04	D	ACC	0.61 X 0.61	1.00	0.37	
85	53+13	D	ACC	0.61 X 0.61	1.00	0.37	
86	53+43	D	ACC	0.61 X 0.61	1.00	0.37	
87	53+49	D	ACC	0.61 X 0.61	1.00	0.37	
88	53+68	D	ACC	0.91 X 3.66	1.00	3.34	
89	53+86	D	ACC	0.61 X 0.61	1.00	0.37	
90	53+92	D	ACC	0.61 X 0.61	1.00	0.37	
91	54+04	D	ACC	0.61 X 0.61	1.00	0.37	
92	54+17	P	ACC	0.61 X 0.61	1.00	0.37	
93	54+22	D	ACC	0.61 X 0.61	1.00	0.37	
94	54+28	D	ACC	0.61 X 3.66	1.00	2.23	
95	54+35	D	ACC	0.61 X 3.66	1.00	2.23	
96	54+41	D	ACC	1.83 X 0.61	1.00	1.11	
97	55+53	D	ACC	0.91 X 0.61	1.00	0.56	
98	55+78	D	ACC	7.62 X 0.61	1.00	4.65	
99	56+89	D	ACC	0.61 X 0.61	1.00	0.37	
100	58+22	D	ACC	3.05 X 0.61	1.00	1.86	
101	58+34	D	ACC	1.83 X 0.61	1.00	1.11	
102	58+59	D	ACC	1.22 X 0.61	1.00	0.74	
103	58+72	D	ACC	1.22 X 1.22	1.00	1.49	
104	58+72	P	ACC	1.22 X 1.22	1.00	1.49	
105	58+86	P	ACC	3.66 X 1.22	1.00	4.46	
106	58+89	P	ACC	0.61 X 0.61	1.00	0.37	
107	58+92	P	ACC	1.22 X 1.22	1.00	1.49	
108	58+95	P	ACC	0.61 X 0.61	1.00	0.37	
109	59+14	D	ACC	0.61 X 0.91	1.00	0.56	
110	59+20	D	ACC	0.61 X 0.61	1.00	0.37	
111	59+36	D	ACC	3.05 X 0.61	1.00	1.86	
112	61+09	D	ACC	1.22 X 0.61	1.00	0.74	
113	61+20	D	ACC	7.01 X 0.61	1.00	4.27	
114	61+30	P	ACC	3.05 X 0.61	1.00	1.86	
115	61+54	D	ACC	1.83 X 0.61	1.00	1.11	
116	61+58	D	ACC	1.22 X 0.61	1.00	0.74	
117	61+63	D	ACC	0.61 X 0.61	1.00	0.37	
118	62+74	D	ACC	6.10 X 0.61	1.00	3.72	
119	64+57	D	ACC	0.61 X 0.61	1.00	0.37	
120	64+63	D	ACC	1.22 X 0.61	1.00	0.74	
121	65+76	D	ACC	0.61 X 0.61	1.00	0.37	
122	65+80	D	ACC	1.22 X 0.61	1.00	0.74	
123	66+01	P	ACC	2.44 X 0.61	1.00	1.49	
124	66+22	D	ACC	3.05 X 0.61	1.00	1.86	
125	67+30	D	ACC	0.61 X 0.61	1.00	0.37	
126	68+17	D	ACC	0.61 X 0.61	1.00	0.37	
127	68+95	D	ACC	0.61 X 0.61	1.00	0.37	
128	69+26	D	ACC	0.61 X 0.61	1.00	0.37	
129	70+29	D	ACC	0.61 X 3.66	1.00	2.23	
130	70+35	D	ACC	0.61 X 0.61	1.00	0.37	
131	70+54	D	ACC	0.61 X 0.61	1.00	0.37	
132	70+78	D	ACC	0.61 X 0.61	1.00	0.37	
133	71+21	D	ACC	1.22 X 1.22	1.00	1.49	
134	71+27	D	ACC	0.61 X 0.61	1.00	0.37	
135	71+32	D	ACC	0.61 X 0.61	1.00	0.37	
136	71+88	D	ACC	0.61 X 0.61	1.00	0.37	
137	72+43	D	ACC	1.22 X 1.22	1.00	1.49	(2)
138	72+49	D	ACC	0.61 X 1.22	1.00	0.74	
139	72+55	D	ACC	0.91 X 0.91	1.00	0.84	
140	72+61	D	ACC	0.91 X 1.52	1.00	1.39	
141	72+67	D	ACC	0.61 X 0.61	1.00	0.37	
142	72+73	D	ACC	0.91 X 1.52	1.00	1.39	
143	72+80	D	ACC	0.61 X 3.66	1.00	2.23	
144	72+85	D	ACC	0.61 X 1.22	1.00	0.74	
145	72+85	P	ACC	0.91 X 0.61	1.00	0.56	
146	72+91	D	ACC	0.61 X 0.61	1.00	0.37	
147	73+26	D	ACC	0.91 X 1.52	1.00	1.39	

TABULATION OF PARTIAL DEPTH ACC OR PCC REPAIR PATCHES

102-14
09-27-94

LOCATION No.	Station to Station or Milepost to Milepost	Lane	TYPE ACC or PCC	DIMENSION OF PATCH Length x Width m	ESTIMATED QUANTITIES No. of Patches	m2	REMARKS
148	73+35	D	ACC	0.61 X 0.61	1.00	0.37	
149	73+76	D	ACC	0.61 X 1.22	1.00	0.74	
150	73+82	D	ACC	0.61 X 0.61	1.00	0.37	
151	75+57	D	ACC	0.61 X 0.61	1.00	0.37	
152	75+81	D	ACC	0.61 X 0.61	1.00	0.37	
153	76+06	D	ACC	0.91 X 0.61	1.00	0.56	
154	76+50	D	ACC	0.61 X 1.22	1.00	0.74	
155	77+04	D	ACC	0.61 X 1.22	1.00	0.74	
156	77+54	L	ACC	0.61 X 2.74	1.00	1.67	
157	77+54	L	ACC	0.61 X 2.74	1.00	1.67	
158	79+22	P	ACC	0.61 X 5.49	1.00	3.34	(3)
159	79+22	D	ACC	0.61 X 3.66	1.00	2.23	(3)
160	79+22	R	ACC	0.61 X 6.71	1.00	4.09	(3)
	WEST BOUND LANE						
161	80+55	P	ACC	0.61 X 5.49	1.00	3.34	(3)(6)
162	80+55	D	ACC	0.61 X 6.71	1.00	4.09	(3)(6)
163	79+25	P	ACC	0.61 X 5.49	1.00	3.34	(3)(6)
164	79+25	D	ACC	0.61 X 3.66	1.00	2.23	(3)
165	79+25	D	ACC	0.61 X 7.92	1.00	4.83	(3)(7)
166	79+19	P	ACC	0.61 X 5.49	1.00	3.34	(3)(6)
167	79+19	D	ACC	0.61 X 3.66	1.00	2.23	(3)
168	79+19	D	ACC	0.61 X 7.62	1.00	4.65	(3)(7)
169	78+09	P	ACC	0.61 X 5.49	1.00	3.34	(3)(6)
170	78+09	D	ACC	0.61 X 3.66	1.00	2.23	(3)
171	78+09	D	ACC	0.61 X 9.14	1.00	5.57	(3)(7)
172	77+92	P	ACC	0.61 X 5.49	1.00	3.34	(3)(6)
173	77+92	D	ACC	0.61 X 3.66	1.00	2.23	(3)
174	77+92	D	ACC	0.61 X 10.9	1.00	6.69	(3)(7)
175	77+86	P	ACC	0.61 X 5.49	1.00	3.34	(3)(6)
176	77+86	D	ACC	0.61 X 3.66	1.00	2.23	(3)
177	77+86	D	ACC	0.61 X 11.28	1.00	6.87	(3)(7)
178	74+28	D	ACC	0.61 X 0.61	1.00	0.37	
179	73+08	D	ACC	0.61 X 0.61	1.00	0.37	
180	73+02	D	ACC	0.61 X 0.61	1.00	0.37	
181	72+95	D	ACC	1.22 X 1.22	1.00	1.49	
182	72+64	D	ACC	0.61 X 3.66	1.00	2.23	
183	72+45	D	ACC	0.91 X 0.61	1.00	0.56	
184	72+40	D	ACC	1.22 X 0.61	1.00	0.74	
185	72+15	D	ACC	0.61 X 0.61	1.00	0.37	
186	72+03	D	ACC	0.61 X 1.22	1.00	0.74	
187	71+97	D	ACC	0.61 X 0.61	1.00	0.37	
188	71+91	D	ACC	0.61 X 0.61	1.00	0.37	
189	71+85	D	ACC	0.61 X 0.61	1.00	0.37	
190	71+79	D	ACC	0.61 X 0.91	1.00	0.56	
191	71+67	D	ACC	0.61 X 0.61	1.00	0.37	
192	71+67	P	ACC	0.61 X 0.61	1.00	0.37	
193	71+60	D	ACC	1.22 X 1.22	1.00	1.49	
194	71+55	D	ACC	0.61 X 0.61	1.00	0.37	
195	70+88	D	ACC	0.61 X 0.61	1.00	0.37	
196	70+82	D	ACC	0.61 X 0.61	1.00	0.37	
197	70+67	P	ACC	0.61 X 0.61	1.00	0.37	
198	70+24	D	ACC	1.22 X 1.22	1.00	1.49	
199	70+18	D	ACC	0.61 X 0.61	1.00	0.37	
200	70+06	D	ACC	0.61 X 0.61	1.00	0.37	
201	69+99	D	ACC	0.61 X 0.61	1.00	0.37	
202	69+39	D	ACC	0.61 X 0.61	1.00	0.37	
203	69+32	D	ACC	0.61 X 0.61	1.00	0.37	
204	69+14	D	ACC	1.22 X 1.22	1.00	1.49	
205	69+08	P	ACC	0.61 X 0.61	1.00	0.37	
206	69+02	P	ACC	0.61 X 0.61	1.00	0.37	
207	68+41	D	ACC	0.61 X 0.61	1.00	0.37	
208	68+28	D	ACC	0.61 X 0.61	1.00	0.37	
209	67+74	D	ACC	1.22 X 1.22	1.00	1.49	
210	67+68	P	ACC	0.61 X 0.61	1.00	0.37	
211	67+44	D	ACC	0.61 X 0.61	1.00	0.37	
212	67+38	D	ACC	0.61 X 0.61	1.00	0.37	
213	67+25	D	ACC	0.61 X 0.61	1.00	0.37	
214	66+82	D	ACC	0.61 X 0.61	1.00	0.37	
215	66+58	D	ACC	0.61 X 0.61	1.00	0.37	
216	66+52	D	ACC	0.61 X 0.61	1.00	0.37	
217	66+27	P	ACC	0.61 X 0.61	1.00	0.37	
218	66+21	P	ACC	0.61 X 0.61	1.00	0.37	

TABULATION OF PARTIAL DEPTH ACC OR PCC REPAIR PATCHES

102-14
09-27-94

LOCATION No.	LOCATION Station to Station or Milepost to Milepost	LOCATION Lane	TYPE ACC or PCC	DIMENSION OF PATCH Length x Width m	ESTIMATED QUANTITIES No. of Patches	ESTIMATED QUANTITIES m2	REMARKS
219	65+72	P	ACC	0.61 X 0.61	1.00	0.37	
220	65+67	D	ACC	0.61 X 1.22	1.00	0.74	
221	65+42	D	ACC	0.61 X 1.22	1.00	0.74	
222	64+63	D	ACC	0.61 X 0.61	1.00	0.37	
223	63+71	P	ACC	0.61 X 0.61	1.00	0.37	
224	62+61	D	ACC	0.61 X 1.22	1.00	0.74	
225	62+01	P	ACC	0.61 X 0.61	1.00	0.37	
226	60+18	D	ACC	0.61 X 0.61	1.00	0.37	
227	60+12	D	ACC	0.61 X 0.61	1.00	0.37	
228	60+05	P	ACC	0.61 X 3.66	1.00	2.23	
229	59+85	P	ACC	0.61 X 0.61	1.00	0.37	
230	58+22	D	ACC	0.61 X 0.61	1.00	0.37	
231	57+45	P	ACC	0.61 X 0.61	1.00	0.37	
232	55+92	D	ACC	0.61 X 0.61	1.00	0.37	
233	55+08	D	ACC	0.61 X 0.61	1.00	0.37	
234	55+08	P	ACC	0.61 X 0.61	1.00	0.37	
235	54+60	D	ACC	0.61 X 0.61	1.00	0.37	
236	54+53	D	ACC	0.91 X 0.61	1.00	0.56	
237	50+10	D	ACC	0.61 X 0.61	1.00	0.37	
238	49+62	D	ACC	1.22 X 1.22	1.00	1.49	
239	49+43	D	ACC	2.13 X 0.61	1.00	1.30	
240	46+91	P	ACC	2.44 X 0.61	1.00	1.49	
241	46+26	P	ACC	1.22 X 0.61	1.00	0.74	
242	46+02	D	ACC	0.61 X 0.61	1.00	0.37	
243	45+46	D	ACC	0.61 X 0.61	1.00	0.37	
244	45+35	D	ACC	1.22 X 0.61	1.00	0.74	
245	45+04	D	ACC	1.83 X 0.61	1.00	1.11	
246	44+50	D	ACC	0.61 X 0.61	1.00	0.37	
247	44+42	D	ACC	0.61 X 0.61	1.00	0.37	
248	44+13	D	ACC	0.61 X 0.91	1.00	0.56	
249	43+83	P	ACC	1.52 X 0.61	1.00	0.93	
250	43+37	P	ACC	1.22 X 0.61	1.00	0.74	
251	42+85	P	ACC	1.83 X 0.61	1.00	1.11	
252	42+82	D	ACC	1.83 X 0.61	1.00	1.11	
253	41+02	P	ACC	0.61 X 0.61	1.00	0.37	
254	40+99	P	ACC	0.61 X 0.61	1.00	0.37	
255	39+69	D	ACC	1.22 X 0.61	1.00	0.74	
256	38+97	D	ACC	0.61 X 0.61	1.00	0.37	
257	38+72	D	ACC	1.83 X 0.61	1.00	1.11	
258	37+69	D	ACC	4.57 X 0.61	1.00	2.79	
259	37+13	D	ACC	1.22 X 0.61	1.00	0.74	
260	37+05	P	ACC	1.83 X 0.61	1.00	1.11	
261	37+00	P	ACC	3.05 X 0.61	1.00	1.86	
262	36+84	D	ACC	6.10 X 0.61	1.00	3.72	
263	36+76	D	ACC	0.61 X 0.61	.00	0.37	
264	36+52	D	ACC	0.61 X 0.61	1.00	0.37	
265	35+98	P	ACC	1.22 X 0.61	1.00	0.74	
266	35+66	P	ACC	0.61 X 0.61	1.00	0.37	
267	35+36	D	ACC	0.61 X 0.61	1.00	0.37	
268	35+02	D	ACC	3.66 X 0.61	1.00	2.23	
269	34+57	D	ACC	2.44 X 0.61	1.00	1.49	
270	34+50	D	ACC	9.14 X 0.61	1.00	5.57	
271	34+08	D	ACC	6.10 X 0.61	1.00	3.72	
272	32+43	L	ACC	0.61 X 5.49	1.00	3.34	(3)
273	32+43	D	ACC	0.61 X 6.71	1.00	4.09	(3)
274	32+36	L	ACC	0.61 X 5.49	1.00	3.34	(3)
275	32+36	D	ACC	0.61 X 6.71	1.00	4.09	(3)
	I-680 & I-29 INTERCHANGE						
	LOOP "H"						
276	8381+47.3	L	ACC	0.61 X 1.83	1.00	1.11	(4)
277	8380+78.5	L	ACC	2.44 X 0.61	1.00	1.49	(4)
278	8380+83.5	L	ACC	0.61 X 0.61	1.00	0.37	(4)
279	8380+92.5	L	ACC	2.44 X 0.61	1.00	1.49	(4)
280	8381+38.5	L	ACC	1.22 X 4.57	1.00	5.57	
281	8381+43.5	L	ACC	0.61 X 5.49	1.00	3.34	
282	8381+54.5	L	ACC	0.61 X 1.83	1.00	1.11	(4)
283	8382+13.5	L	ACC	1.83 X 0.61	1.00	1.11	(4)
	RAMP "C"						
284	3375+52.8	R	ACC	0.61 X 1.22	1.00	0.74	(5)
285	3375+02.8	R	ACC	0.61 X 0.61	1.00	0.37	(5)
286	3374+90.8	R	ACC	1.83 X 1.22	1.00	2.23	(4)
287	3374+56.8	R	ACC	3.05 X 0.91	1.00	2.79	(4)

TABULATION OF PARTIAL DEPTH ACC OR PCC REPAIR PATCHES

102-14
09-27-94

LOCATION No.	LOCATION Station to Station or Milepost to Milepost	LOCATION Lane	TYPE ACC or PCC	DIMENSION OF PATCH Length x Width m	ESTIMATED QUANTITIES No. of Patches	ESTIMATED QUANTITIES m2	REMARKS
	I-680 & COUNTY ROAD INTERCHANGE						
	RAMP "B"						
288	2444+85.8	R	ACC	1.22 X 1.22	1.00	1.49	(5)
289	2446+45.8	R	ACC	0.61 X 1.83	1.00	1.11	(5)
	RAMP "D"						
290	4447+20.7	R	ACC	0.61 X 2.44	1.00	1.49	(5)
	RAMP "A"						
291	1453+28.9	R	ACC	0.61 X 3.96	1.00	2.42	(5)
292	1451+15.9	R	ACC	0.61 X 0.61	1.00	0.37	(5)
293	1450+89.9	R	ACC	1.22 X 0.61	1.00	0.74	(5)
294	1449+28.9	R	ACC	1.83 X 0.61	1.00	1.11	(4)
295	1449+03.9	R	ACC	2.44 X 0.61	1.00	1.49	(4)
296	1448+94.9	R	ACC	2.44 X 0.61	1.00	1.49	(5)
297	1448+82.9	R	ACC	1.22 X 0.61	1.00	0.74	(4)
298	1448+45.9	R	ACC	3.05 X 0.61	1.00	1.86	(4)
299	1447+47.9	R	ACC	1.22 X 3.05	1.00	3.72	(4)
300	1447+44.9	R	ACC	0.61 X 1.22	1.00	0.74	(4)
301	1447+39.9	R	ACC	3.66 X 3.66	1.00	13.38	(4)
	RAMP "C"						
302	3446+71.8	R	ACC	3.05 X 0.91	1.00	2.79	(5)
303	3444+23.8	R	ACC	1.22 X 1.22	1.00	1.49	(5)
304	3443+79.8	R	ACC	1.83 X 0.61	1.00	1.11	(4)
305	3443+58.8	R	ACC	3.05 X 0.61	1.00	1.86	(4)

P=PASSING LANE
D=DRIVING LANE
L=LOOP
G=GORE

NOTES:
(1) GORE
(2) EDGE & TAPER
(3) REMOVE FOAM & FILL W/ACC
(4) LEFT SIDE
(5) RIGHT SIDE
(6) M.L. & PCC SHOULDER
(7) LOOP & SHOULDER

NOTE: 100 mm PCC BASE UNDER
240 mm STANDARD PCC PAVEMENT
LOCATIONS ARE IN STATIONS

TABULATION OF PAVEMENT MARKINGS

108-22
10-31-95

② Broken Center Line (Yellow)
③ Double Center Line (Yellow)
⑤ No-Passing Zone Line (Yellow)
⑥ Broken Lane Line (White)
⑦ Edge Line Right (White)
⑧ Edge Line Left (Yellow)
⑨ Dotted Line (White)
⑩ Solid Lane Line (White)
⑪ Channelizing Line (White)
⑫ Channelizing Line (Yellow)
⑬ Stop Line (White)
⑭ Crosswalk Line (White)
⑮ Yellow Curb
⑯ White Curb

LOCATION				LENGTH (m)															
ROAD IDENTIFICATION	STATION TO STATION	SIDE L	SIDE R	②	③	⑤	⑥	⑦	⑧	⑨	⑩	⑪	⑫	⑬	⑭	⑮	⑯	REMARKS
I-680	Sta. 32+00 To Sta. 82+98 WB Lanes	X	X				14643	4810	4810	20								
I-680	Sta. 32+00 To Sta. 80+89 EB Lanes	X	X				10162	5081	5081	20								
I-680	Ramps Co. Rd. Interchange	X	X					1985	1985			304		15.60				
I-680	Loops I-680/I-29 Interchange	X	X					320	320									
I-680	Sta. 78+56 to Sta. 90+39 EB Lane	X									183							Temporary Painted Markings
	LENGTH SUBTOTALS						24805	12196	12196	400	183	304		15.60				
	QUANTITY FACTORS			.25	2	1	.25	1	1	.33	1	2	2	6	1.5			
	TOTALS						6201.25	12196	12196	132	183	608		93.60				31609.85 m Total Painted Markings
I-680	Sta. 78+56 to Sta. 90+39 EB Lane	X									183							Painted Pav't. Markings Removed
	LENGTH SUBTOTALS										183							
	QUANTITY FACTORS			.25	2	1	.25	1	1	.33	1	2	2	6	1.5			
	TOTALS										183							183.0 m Total Pav't. Markings Removed

DESIGN TEAM ABRAMS/MACKEY/HALVERSON | METRIC | POTTAWATTAMIE COUNTY | PROJECT NUMBER IM-680-1(126)00--13-78 | SHEET NUMBER C.08

15-NOV-1996 12:39 gmackey /usr/svr1/usr4/ord/5a/k78680126.c01

D1

ALL SIGNS REAR FACING

Direction of Marking

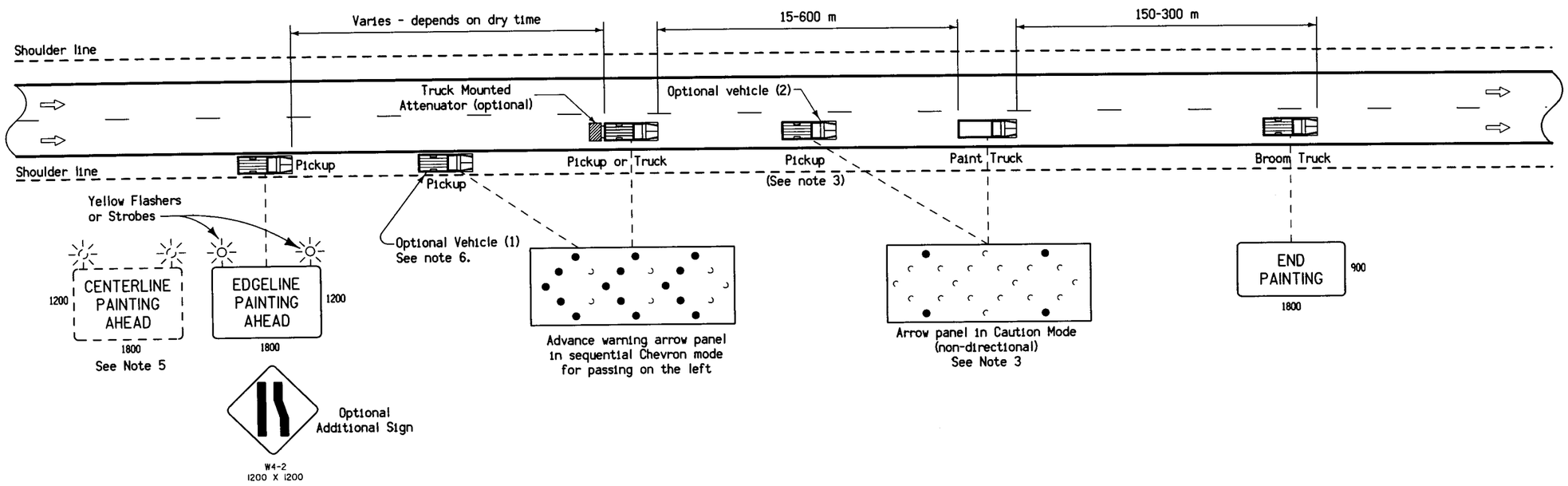

GENERAL NOTES:

1. All signs shall have an orange background with black legend.
2. Signs are illustrated for placing the right edge line. When placing a left (median) edge line, signs shall indicate passing on the right.
3. The arrow panel on the optional vehicle (2) may be used in the sequential chevron mode on divided roadways only. This arrow panel shall be operated in the caution mode when used on undivided roadways or when optional vehicle (1) is used. A yellow strobe or revolving light may be substituted for this arrow panel.
4. Arrow panels shall meet the requirements of a Type 'C' Arrow Display as specified in the MUTCD and current Standard and Supplemental Specifications.
5. This layout may be used to place lane line pavement markings. When used to paint lane line markings, the "EDGELINE PAINTING AHEAD" sign shall be changed to a "CENTERLINE PAINTING AHEAD" sign.
6. Optional vehicle (1) may be used on divided roadways only.

All dimensions given in millimeters unless noted.

M

METRIC VERSION

Iowa Department of Transportation
Project Development Division

DETAIL SHEET **521-41**

REVISION:	REVISION NO.	REVISION DATE
Add optional vehicle with arrow panel. Revise note 3. Add note 6.	3	12-03-96

TRAFFIC CONTROL
FOR EDGE LINE MARKINGS
ON MULTI-LANE DIVIDED
OR UNDIVIDED ROADWAYS

DESIGN TEAM	METRIC		COUNTY	PROJECT NUMBER	SHEET NUMBER
ABRAMS/MACKEY/HALVERSON			POTTAWATTAMIE	IM-680-1(126)00--13-78	J.01

4-NOV-1996 07:10 rhalver /usr/svr1/usr4/ord/5a/k78680126.u01

D1

ALL SIGNS REAR FACING

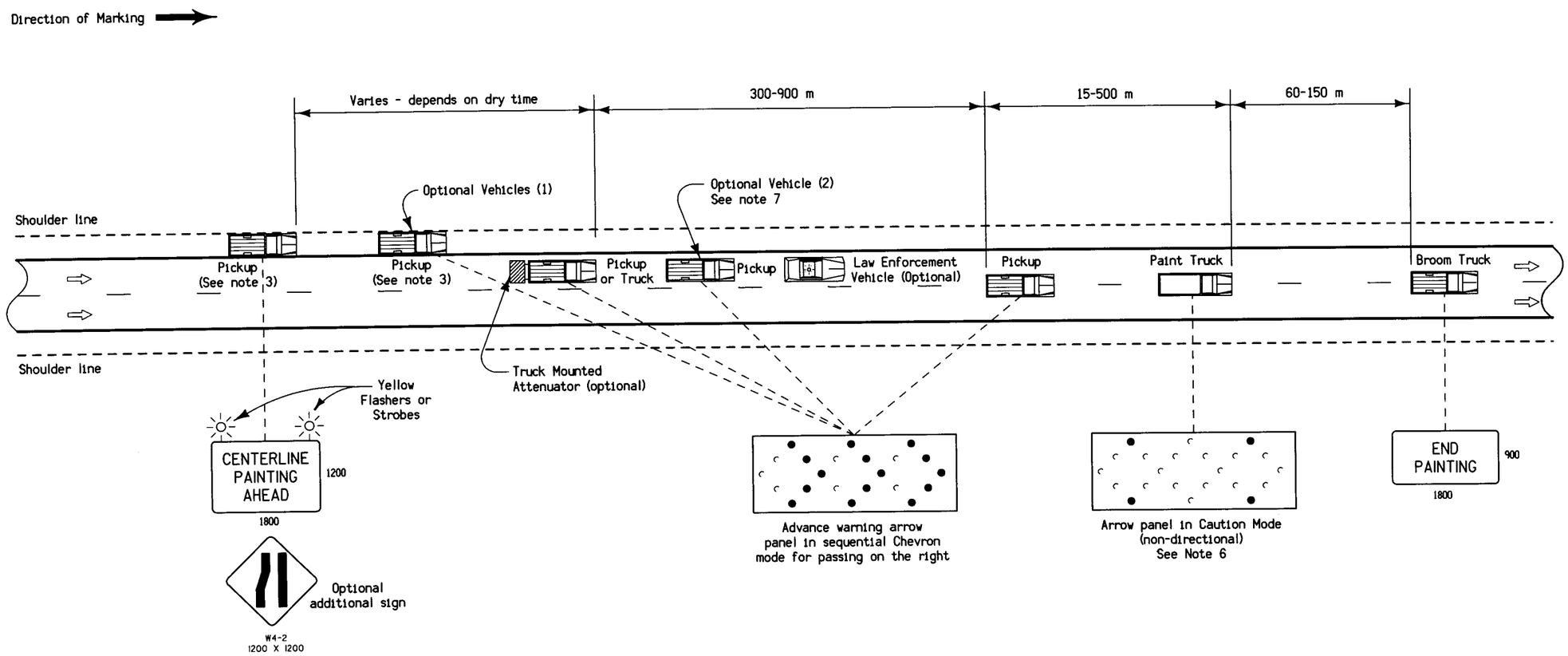

GENERAL NOTES:

1. All signs shall have an orange background with black legend.
2. Where traffic flow would be improved, passing on the left is permissible, but not both sides at one time.
3. The trailing pickup shall be driven in the traveled lane on undivided roadways.
4. Arrow panels shall meet the requirements of a Type 'C' Arrow Display as specified in the MUTCD and current Standard and Supplemental Specifications.
5. Detail Sheet 521–41 may be used in place of this detail sheet.
6. A yellow strobe or revolving light may be substituted for the arrow panel on the paint truck.
7. The arrow panel on optional vehicle (2) shall be operated in the caution mode when optional vehicle (1) is used.

All dimensions given in millimeters unless noted.

M

Iowa Department of Transportation
Project Development Division

METRIC VERSION

DETAIL SHEET **521–42**

REVISION:	REVISION NO.	REVISION DATE
Add optional vehicle with arrow panel. Add note 7.	3	12-03-96

TRAFFIC CONTROL
FOR LANE LINE MARKINGS
ON MULTI-LANE DIVIDED OR
UNDIVIDED ROADWAYS

DESIGN TEAM	METRIC		COUNTY	PROJECT NUMBER	SHEET NUMBER
ABRAMS/MACKEY/HALVERSON			POTTAWATTAMIE	IM-680-1(126)00--13-78	J.02

4-NOV-1996 07:10 rhalver /usr/svr1/usr4/ord/5a/k78680126.u01

D1

MULTI-LANE ROADWAY

TYPICAL APPLICATIONS

- Profilometer
- Road Rater
- Hydroseeder Operation
- Surface Patching
- Crack Sealing
- Core Drilling

LEFT LANE CLOSURE

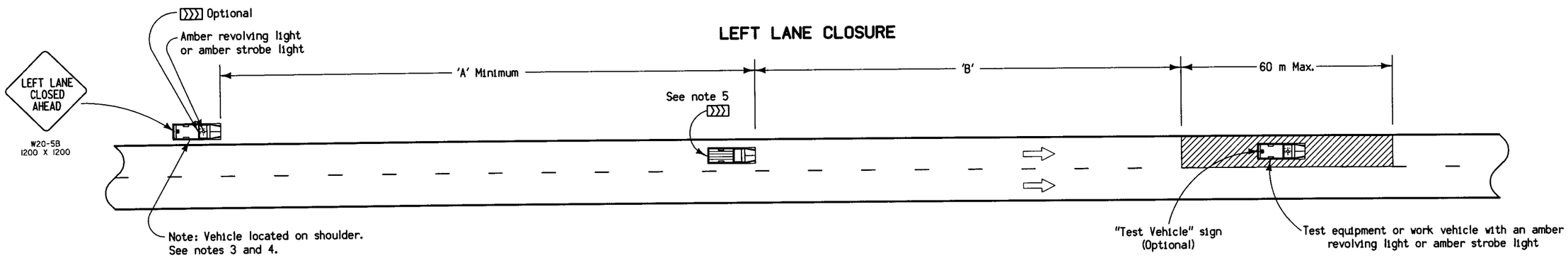

RIGHT LANE CLOSURE

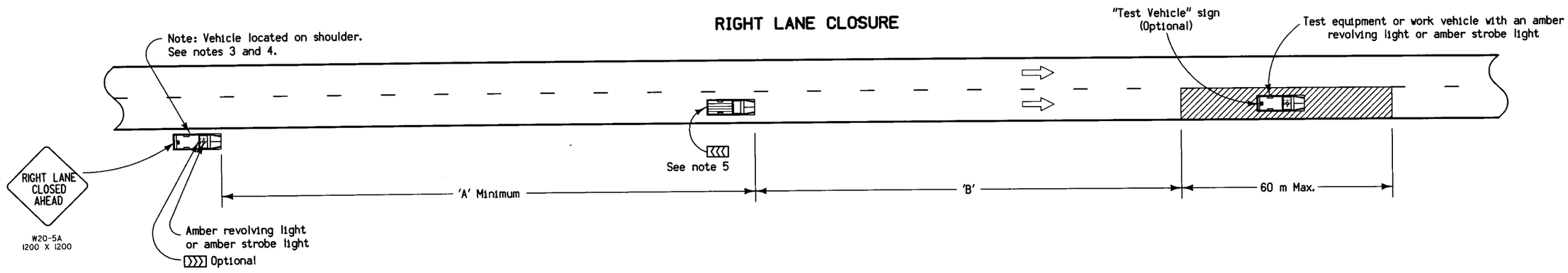

GENERAL NOTES:

1. This layout is intended for use with slow-moving operations (25 mph or less) or operations involving stops not to exceed 30 minutes.
2. Amber revolving light to be visible to traffic at all times.
3. If the vehicle cannot be operated entirely off the traveled way and the legal speed is 45 mph or less, this vehicle and warning sign may be eliminated.
4. If the vehicle cannot be operated entirely off the traveled way and the legal speed is above 45 mph, Standard Road Plan RS-64A shall apply.
5. On a predominantly two-lane primary highway with an intermittent four-lane section, the sequential arrow is required unless one lane is kept closed through the two-lane to four-lane transition and continuing through the work area.

SPEED LIMIT	Approximate Sign Spacing	
	'A'	'B'
0-25 mph	60 m	60 m
25-35 mph	90 m	90 m
35-50 mph	150 m	130 m
Over 50 mph	330 m	150 m

LEGEND

- Traffic Sign
- Work Area
- Sequencing Arrow (Type "C")

All dimensions given in millimeters unless noted.

M

Iowa Department of Transportation
Project Development Division

METRIC VERSION

DETAIL SHEET 521-51

REVISION: Metric conversion of Detail Sheet 521-51 no. 4 (dated 5-10-88).	REVISION NO.	REVISION DATE
	4	06-06-95

TRAFFIC CONTROL LAYOUT
FOR SLOW MOVING VEHICLE
OPERATING IN THE TRAFFIC LANE

Refer to Standard Raod Plan RS-63B
for Lane Closure Traffic Control

ROAD CLOSED
R11-2
1200 X 750

See note 3

Vertical Panels
36 m C/C

8 m C/C

I-680
Eastbound Lanes

237.74 m Merge

LEGEND

- Traffic Sign
- Drum
- Channelizing Device (Vertical Panel, Type I or Type II Barricade) (to be weighted)
- Type III Barricade
- Sequencing Arrow (Type "C")

Ramp "A"

DO NOT ENTER
R5-1
750 X 750

LEFT LANE MUST TURN LEFT
R3-7
10.97 X 10.97

Bridge over I-29

I-680
Westbound Lanes

152.0 m

YIELD
R1-2
900 X 900 X 900

8 m C/C

I-680
Eastbound Lanes

DETOUR NORTH 29
DETOUR EAST 680
Special

76.20 m Min.
Drums @ 15.24 m c/c

ROAD CLOSED
R11-2
1200 X 750

Loop "H"

DETOUR NORTH 29
DETOUR EAST 680
Special

ROAD CLOSED
R11-2
1200 X 750

TRAFFIC CONTROL LAYOUT FOR I-680 LOOP "H" DETOUR

DESIGN TEAM	ABRAMS/MACKEY/HALVERSON	METRIC		POTTAWATTAMIE COUNTY	PROJECT NUMBER	IM-680-1(126)00--13-78	SHEET NUMBER	J.04

18-NOV-1996 13:37 rhalver /usr/svr1/usr4/ord/5a/k78680126.u01

01

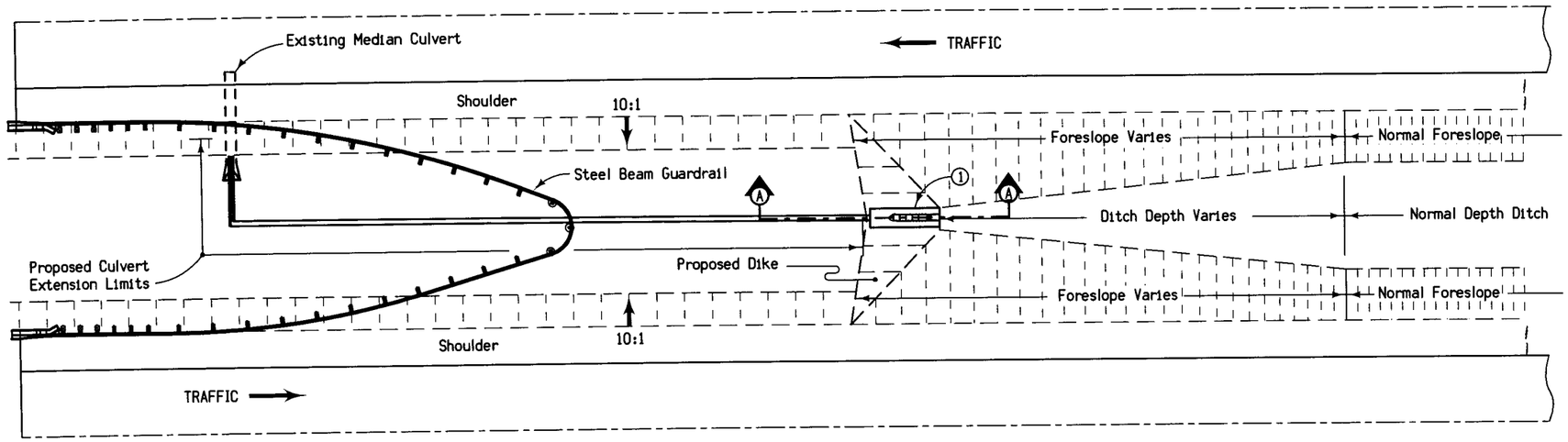

CASE 'A'
Guardrail Installation between Dual Bridges

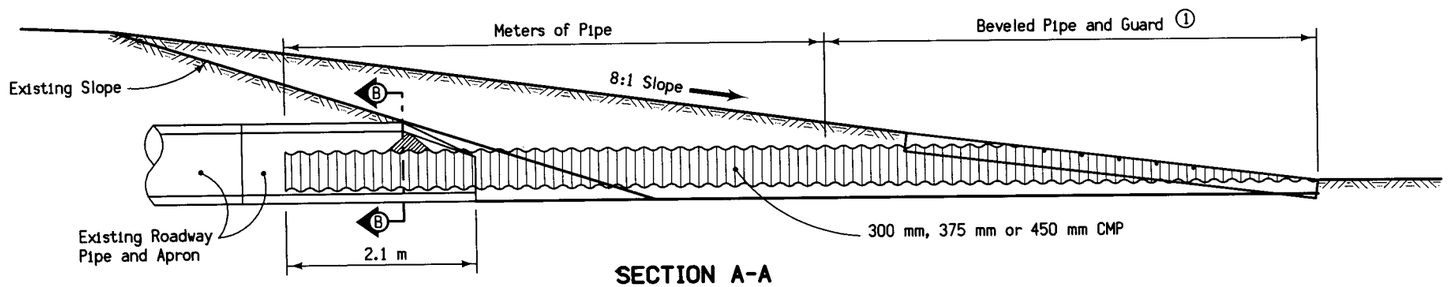

SECTION A-A

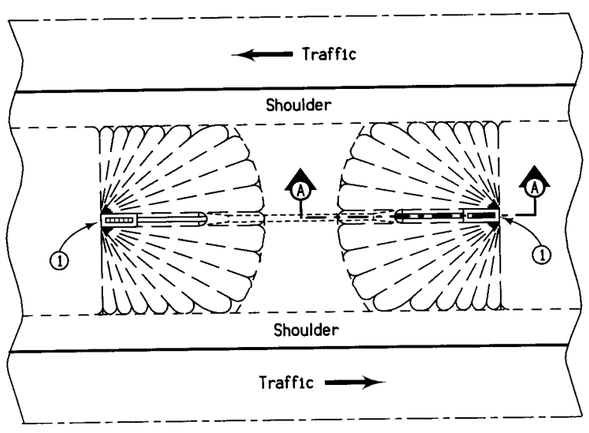

CASE 'B'
Maintenance Crossover

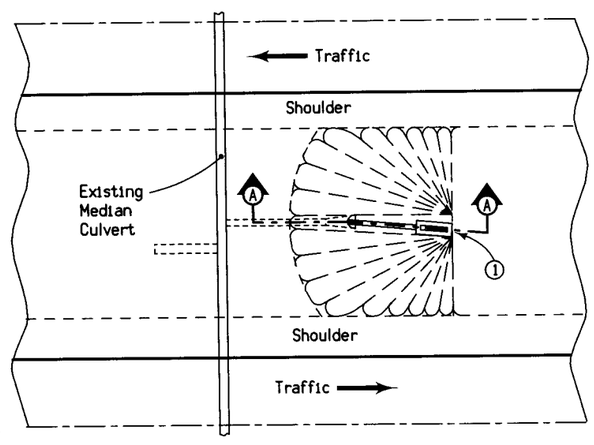

CASE 'C'
Median Culvert

GENERAL NOTES:

Details shown hereon are for the construction of median culvert extensions. Alternate designs, methods of construction or materials may be submitted to the Engineer for approval.

Materials and methods of construction shall be in accordance with current Standard and Supplemental Specifications.

Concrete used in construction of the extension shall be Class 'C' Concrete.

The extension shall be accomplished by the placement of the appropriate size of C.M.P. into the existing culvert and apron. After the C.M.P. has been assembled at the proper angle and placed into the culvert, some adjusting may be required by rotating the C.M.P. to fit the new flow line. The area between the existing apron and C.M.P. shall be sealed with concrete.

Payment items for extending culvert are:

1. "Corrugated Metal Roadway Pipe (Size)" in meters of pipe installed.
2. "Beveled Pipe and Guard", each (See Detail Sheet 500-12).
3. "Elbow (Size)", each.

Price bid for the above items shall be considered full compensation for excavating silt for pipe placement, furnishing all materials and constructing the extension as detailed hereon and as directed by the Engineer.

SPECIAL NOTE:

A silt fence ditch check will be required immediately upstream from the inlet of culvert. Refer to Standard Road Plan RC-16 for construction details and basis of payment.

1 For details of Beveled Pipe and Guard, see Detail Sheet 500-12

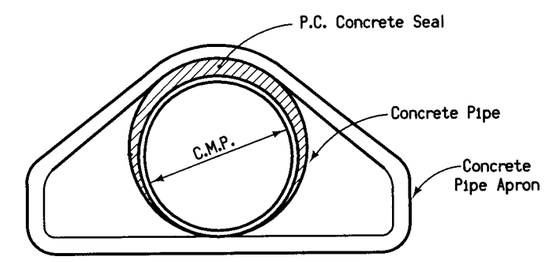

SECTION B-B

All dimensions given in millimeters unless noted.

M

Iowa Department of Transportation
Project Development Division

METRIC VERSION

DETAIL SHEET 500-6

REVISION:	REVISION NO.	REVISION DATE
Metric conversion of Detail Sheet 500-6 no. 1 (dated 3-28-95).	1	03-28-95

DETAILS OF MEDIAN CULVERT EXTENSIONS WITH BEVELED PIPE AND GUARD

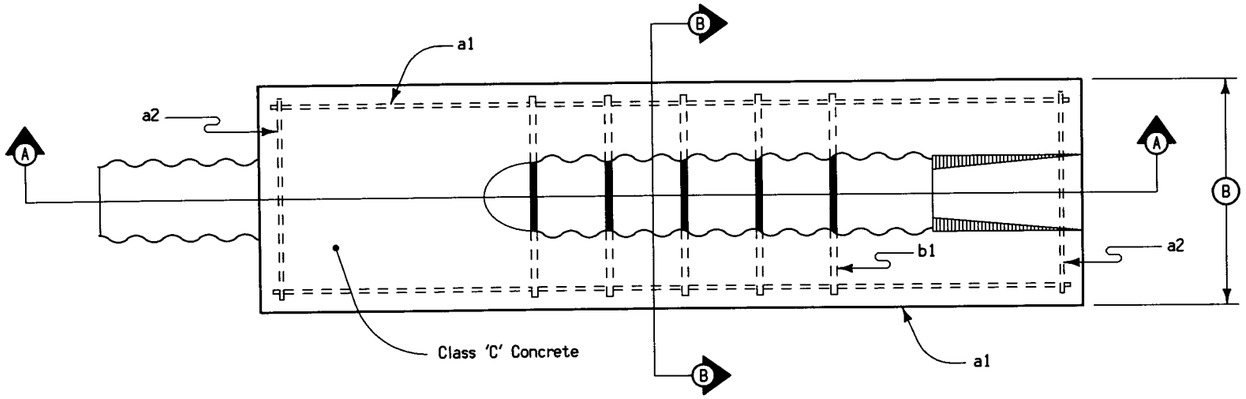

PLAN VIEW

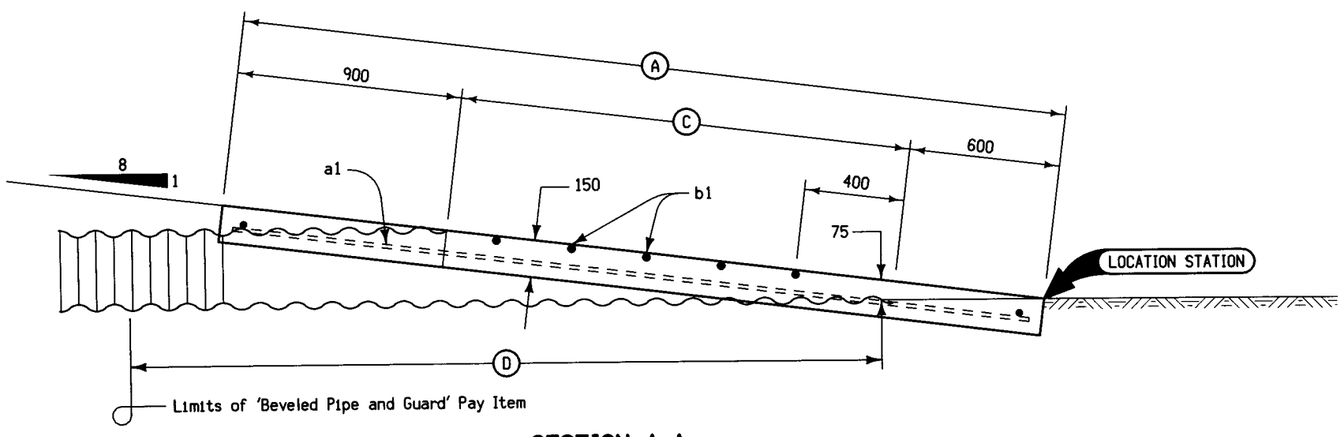

SECTION A-A

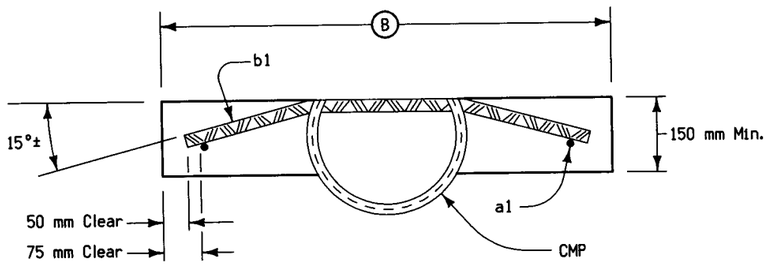

SECTION B-B

GENERAL NOTES:

This plan illustrates the details for the construction of a Beveled Pipe and Guard. Alternate designs, methods of construction or materials may be submitted to the Engineer for approval.

Materials and methods of construction shall be in accordance with current Standard and Supplemental Specifications.

Reinforcing steel used in construction of "Beveled Pipe and Guard" shall be deformed bars meeting the requirements of Article 4151.03. All steel bars shall be hot-dip galvanized in accordance with ASTM A 123 specifications.

Concrete used in the construction of Beveled Pipe and Guard shall be Class 'C' Concrete.

The Corrugated Metal Pipe shall be cut to fit the 8:1 foreslope. Slots shall be cut into the CMP for placement of the No. 25 bar. After the foreslope has been placed, the No. 25 bars shall be fitted into the slots cut in the CMP so thay will be in proper position when the concrete collar is poured.

Price bid for "Beveled Pipe and Guard", each, shall be considered full compensation for the furnishing all the materials and constructing the Beveled Pipe and Guard as detailed hereon and as directed by the Engineer.

Special Note:

A silt fence ditch check will be required immediately upstream from the inlet of the culvert. Refer to Standard Road Plan RC-16 for construction details and basis of payment.

TABLE OF DIMENSIONS

PIPE SIZE	A	B	C	D
300	3300	900	1800	3000
375	3900	975	2400	3600
450	4500	1050	3000	4200

REINFORCING BAR LIST

PIPE SIZE	BAR MARK	BAR SIZE	LOCATION	SHAPE	NO.	LENGTH mm	TOTAL LENGTH mm	MASS kg	TOTAL MASS kg	SPACING mm
300	a1	15	Base		2	3200	6400	10	19	See Detail
	a2	15	Base		2	800	1600	3		See Detail
	b1	25	Base		5	815	1630	6		300
375	a1	15	Base		2	3800	7600	12	22	See Detail
	a2	15	Base		2	875	1750	3		See Detail
	b1	25	Base		7	890	1780	7		300
450	a1	15	Base		2	4400	8800	14	25	See Detail
	a2	15	Base		2	950	1900	3		See Detail
	b1	25	Base		9	965	1930	8		300

All dimensions given in millimeters unless noted.

M

Iowa Department of Transportation
Project Development Division

METRIC VERSION

DETAIL SHEET **500-12**

REVISION: Metric conversion of Detail Sheet 500-12 no. 3 (dated3-28-95).

REVISION NO.	REVISION DATE
3	03-28-95

DETAILS OF
BEVELED PIPE AND GUARD

DESIGN TEAM	ABRAMS/MACKEY/HALVERSON	METRIC		POTTAWATTAMIE COUNTY	PROJECT NUMBER	IM-680-1(126)00--13-78	SHEET NUMBER	U.02

4-NOV-1996 07:12 rhalver /usr/svr1/usr4/ord/5a/k78680126.u03

D1

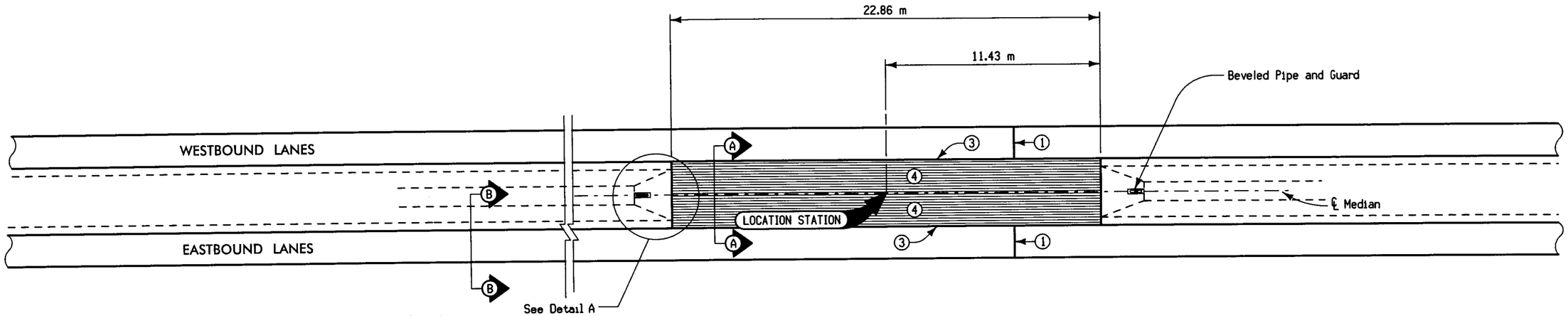

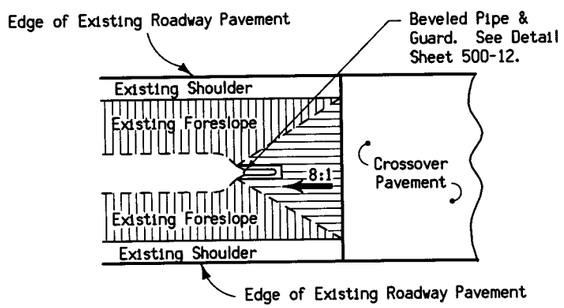

DETAIL A

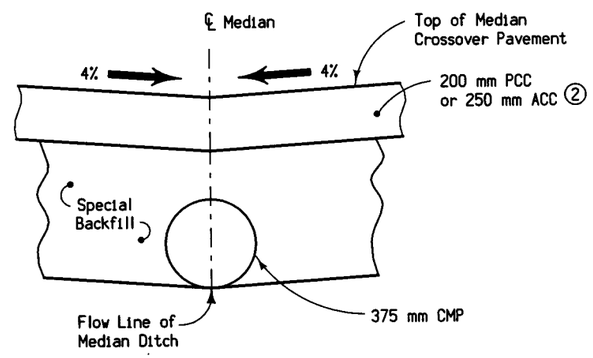

SECTION A-A

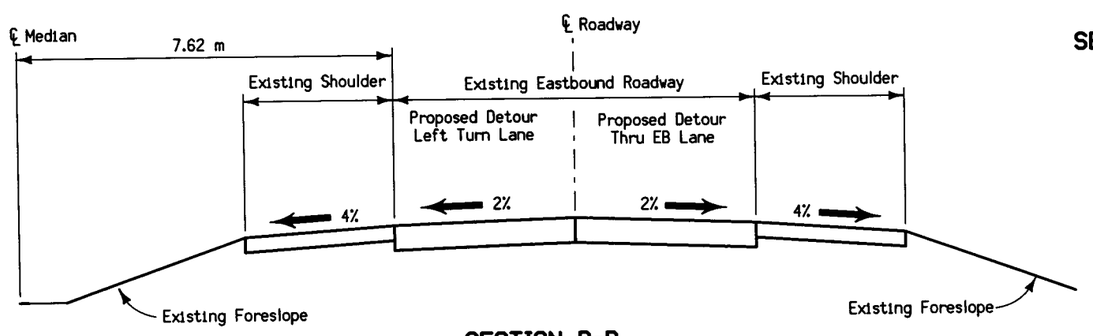

SECTION B-B

GENERAL NOTES:

This plan shows the construction requirements for a median crossover where the median width is 15.24 meters and located adjacent to ramp terminals. Materials and methods of construction shall conform to the requirements of current Standard and Supplemental Specifications.

The Engineer will determine the header location to accommodate the required staging activities.

Price bid for contract items shall be considered full compensation for furnishing all necessary materials and labor to construct the median crossover as detailed.

Contract bid items are:	Unit	Amount
Removal of pavement * (Existing Shoulder &Crossover)	m^2	221
Special Backfill	Mg	644 **
Median Crossover Pavement	m^2	348
375 mm Corrugated Metal Roadway Pipe Culvert	m	33.2

* The removal of subbase material is considered incidental to the removal of pavement.

** Quantities are based on the assumption that the existing median ditch is 1.2 meters deep and foreslopes are 4:1.

All dimensions given in millimeters unless noted.

For Information Of Ramps And Loops See Sheet No. U.07

1. Possible location of staging header.
2. 200 mm PCC Pavement, Class 'C', with required joints, or 250 mm ACC Pavement, 19 mm Type A-75, 75 blow mix, Class 1B compaction and Type 4 or better frictional classification.
3. 'B' Joint required.
4. Transverse joints not required.

MODIFIED DETAIL 531-2

DETAILS OF MEDIAN CROSSSOVER AT INTERCHANGE (15.24 m MEDIAN)

Crossover Located at Sta. 80+24±

DESIGN TEAM	ABRAMS/MACKEY/HALVERSON	METRIC		POTTAWATTAMIE COUNTY	PROJECT NUMBER	IM-680-1(126)00--13-78	SHEET NUMBER	U.03

15-NOV-1996 12:23 gmackey /usr/svr1/usr4/ord/5a/k78680126.u02

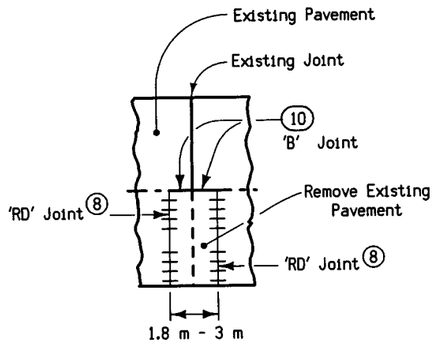

ONE LANE WIDTH PATCH

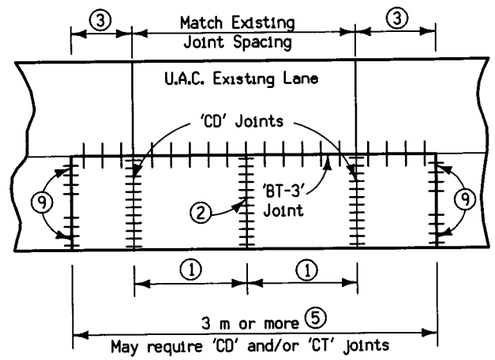

ONE LANE WIDTH PATCH

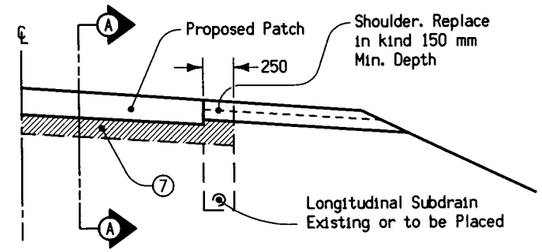

GRANULAR SUBBASE AND SUBDRAIN

(WHEN REQUIRED BY PLAN)

IF LONGITUDINAL SUBDRAIN IS PRESENT OR IS TO BE PLACED

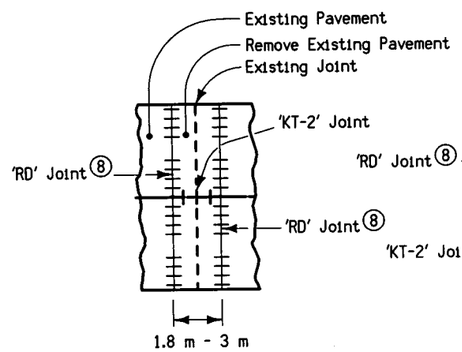

FULL ROADWAY WIDTH PATCH

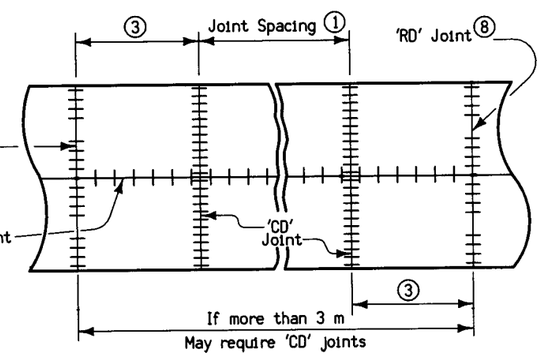

FULL ROADWAY WIDTH PATCH

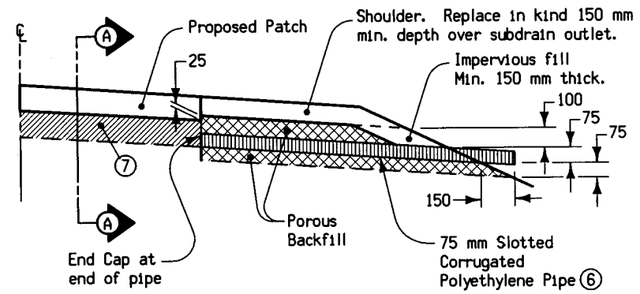

GRANULAR SUBBASE AND SUBDRAIN

(WHEN REQUIRED BY PLAN)

WITHOUT LONGITUDINAL SUBDRAIN

GENERAL NOTES:

Materials and methods of construction shall be in accordance with current Standard and Supplemental Specifications.

Refer to Standard Road Plans RH-50 and RH-51 for details of joint construction.

All patches shall be rectangular even when existing pavement joints are skewed.

1. Joint spacing: 3 meters minimum, 6 meters maximum, 4.5 meters optimum.
2. Mid panel joint shall be either a 'CT' or a 'CD' joint. If there is no existing joint or crack in the adjacent pavement, place a 'CT' joint. If there is an existing joint or crack in the adjacent pavement, place a 'CD' joint at the same transverse location.
3. New 'CD' Joint must be a minimum 1.5 meters from the patch end.
4. The face of the patch should be near vertical. Protrusions less than 50 millimeters need not be removed if uniformly tapered from bottom of saw cut to bottom of patch. A step or ledge on this face is not allowed.
5. If one lane patch exceeds 15 meters, both lanes should be considered for patching.
6. If longitudinal subdrain (shoulder) is not to be placed or if not present on side of roadway to be patched, then place 75 millimeter slotted corrugated pipe at low end of patch.
7. 150 millimeter granular subbase if required by plan. When placed, granular subbase should extend over longitudinal subdrain, if present.
8. The joint shall be sawed and sealed after patching. Refer to RH-50 for joint details.
9. If this joint is across from an existing crack or joint, then use 'RD' joint, otherwise use 'RT' joint. The joint shall be sawed and sealed after patching. Refer to RH-50 for joint details.
10. Requires full depth saw cut. Place 13 millimeter preformed joint material between patch and concrete in adjacent lane.

BAR SIZE TABLE			
T	< 200 mm	≥ 200 mm but < 250 mm	≥ 250 mm
DOWEL SIZE	20	30	35
TIE BAR SIZE	#20	#30	#35

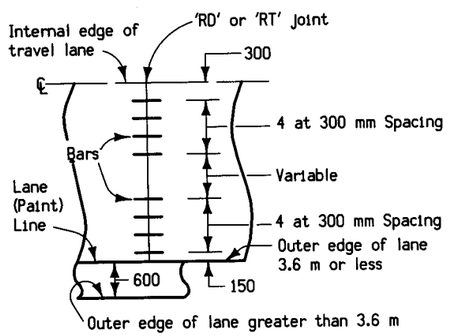

DETAIL FOR 'RT' OR 'RD' JOINT BAR SPACING

TYPICAL HALF PLAN

For interior lanes, place first bar 300 mm from edge of lane (slab).

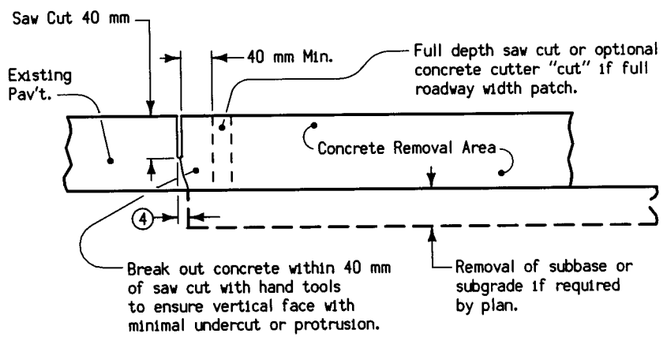

PAVEMENT REMOVAL DETAILS

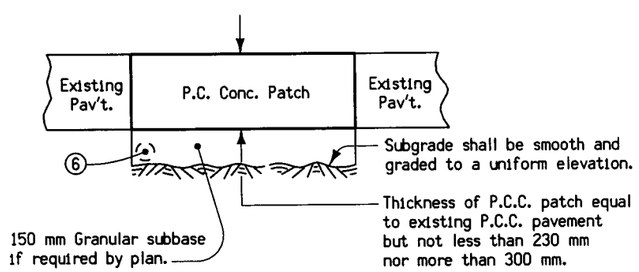

SECTION A-A

All dimensions given in millimeters unless noted.

M

METRIC VERSION

Iowa Department of Transportation
Project Development Division

DETAIL SHEET 532-4

REVISION:	REVISION NO.	REVISION DATE
Correct dowel bar size in table.	9	12-08-95

FULL DEPTH PATCH
P. C. CONCRETE
WITH DOWELS

DESIGN TEAM	METRIC		COUNTY	PROJECT NUMBER	SHEET NUMBER
ABRAMS/MACKEY/HALVERSON		POTTAWATTAMIE		IM-680-1(126)00--13-78	U.04

4-NOV-1996 07:11 rhalver /usr/svr1/usr4/ord/5a/k78680126.u02

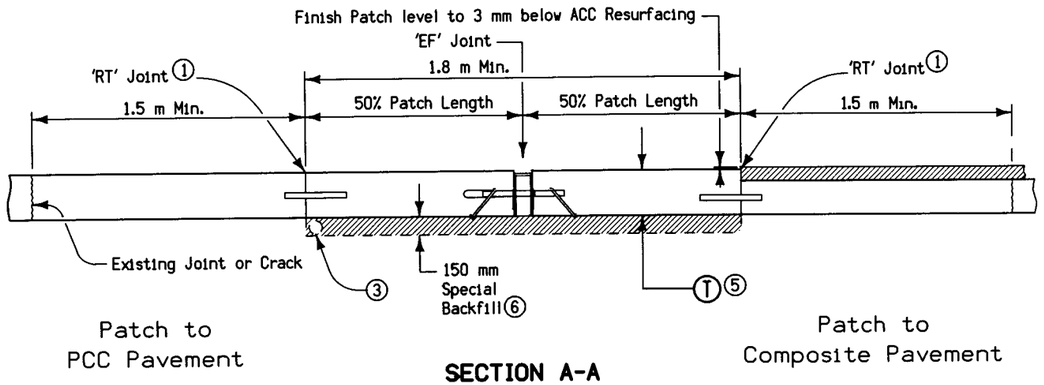

SECTION A-A

DOWELED PCC PAVEMENT

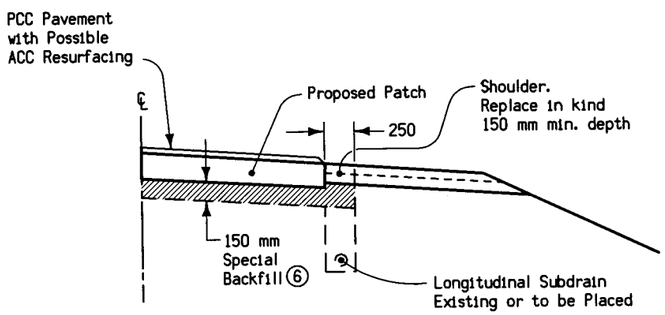

SPECIAL BACKFILL AND SUBDRAIN

IF LONGITUDINAL SUBDRAIN IS PRESENT OR IS TO BE PLACED

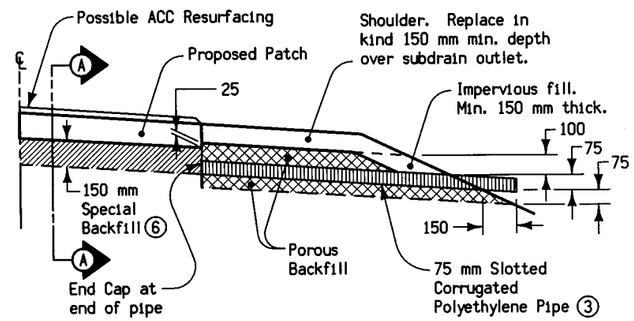

SPECIAL BACKFILL AND SUBDRAIN

WITHOUT LONGITUDINAL SUBDRAIN

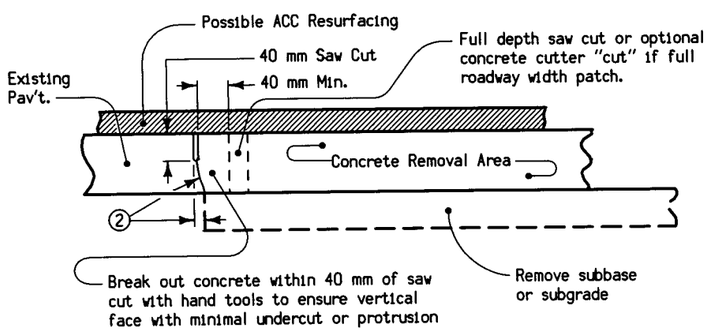

PAVEMENT REMOVAL DETAILS

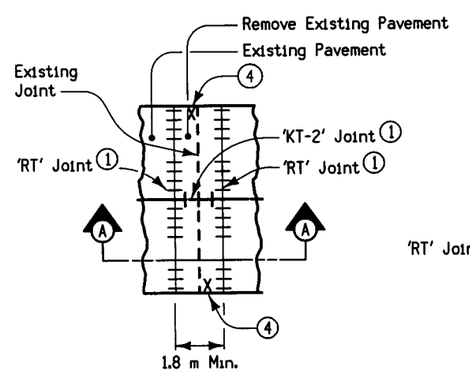

FULL ROADWAY WIDTH PATCH

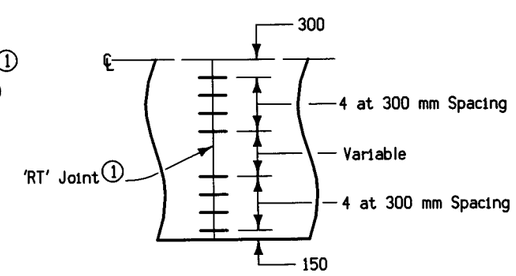

TYPICAL HALF PLAN

DETAIL "A"

GENERAL NOTES

Materials and methods of construction shall be in accordance with current Standard and Supplemental Specifications.

Full Depth Patch with 'EF' joint shall be placed after the final lift of asphalt has been placed.

Full Depth Patch shall be placed and paid for according to full depth patch specifications and Detail Sheet 532-4, except as noted on this sheet.

Full Depth Patch and 'EF' joint shall be placed full width of the roadway. If roadway has PCC shoulders, 'CF' joint shall extend across shoulder. Cost of placing 'CF' joint is incidental to 'EF' joint. Refer to Standard Road Plan RH-52 for joint details.

The price bid for "EF Joint Assembly" shall be full compensation for furnishing and placing each nominal 3.6 meter lane width joint and Special Backfill. Joints placed in taper locations and less than 3.6 meter width shall be counted as a complete joint assembly.

1. Refer to Standard Road Plan RH-50 and RH-51 for joint details.
2. The face of the patch should be near vertical. Protrusions less than 50 millimeters need not be removed if uniformly tapered from bottom of saw cut to bottom of patch. A step of ledge on this face is not allowed.
3. If longitudinal subdrain (shoulder) is not to be placed or if not present on side of roadway to be patched, then place 75 millimeter slotted corrugated pipe at low end of patch.
4. A "X" shall be placed in the plastic concrete near the 'EF' joint at the outside edge of pavement.
5. Unless otherwise noted in the plans, depth of patch, T, shall be 300 millimeters regardless of existing pavement thickness.
6. 150 millimeters of Special Backfill required under Full Depth Patch with 'EF' joint. Special Backfill should extend over longitudinal subdrain, if present.

All dimensions given in millimeters unless noted.

M — Iowa Department of Transportation, Project Development Division

METRIC VERSION

DETAIL SHEET 532-9

REVISION:	REVISION NO.	REVISION DATE
Metric conversion of Detail Sheet 532-9 no. 7 (dated 9-27-94).	7	06-06-95

FULL DEPTH PATCH WITH "EF" JOINT IN PCC

DESIGN TEAM	METRIC	COUNTY	PROJECT NUMBER	SHEET NUMBER
ABRAMS/MACKEY/HALVERSON		POTTAWATTAMIE	IM-680-1(126)00--13-78	U.05

D1

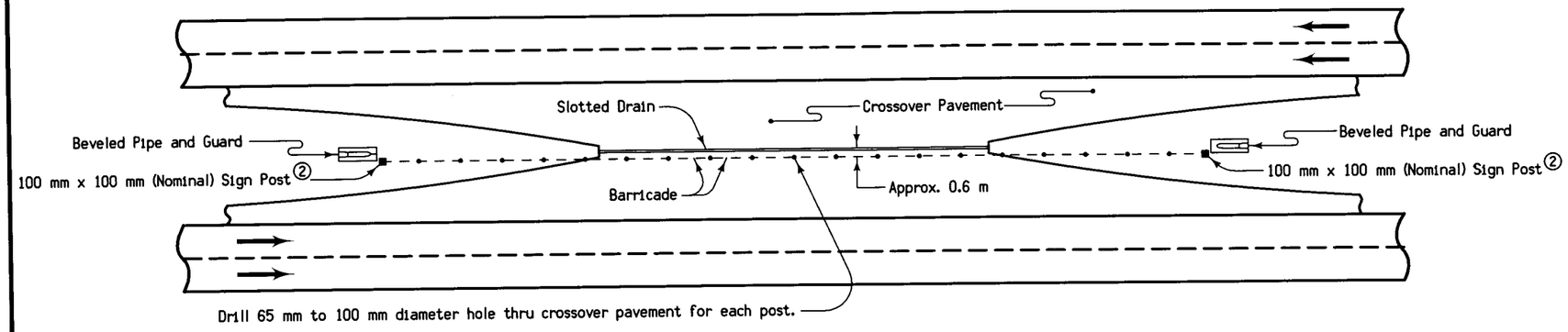

PLAN VIEW

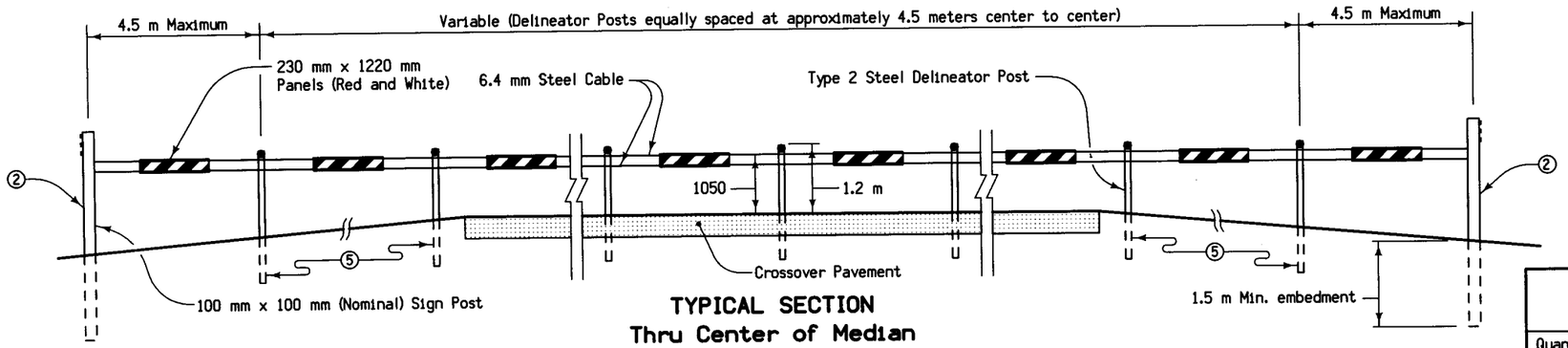

TYPICAL SECTION
Thru Center of Median

GENERAL NOTES:

This plan sheet shows the details for installing a barricade at a paved median crossover.

Materials and methods of construction shall be in accordance with current Standard and Supplemental Specifications.

Alternate details and items not specifically covered by specifications shall be submitted to the Engineer for approval.

Type 2 steel posts, cable, cable clamps, and eye bolts shall be hot dipped galvanized after fabrication.

The price bid for "Crossover Barricade," each, shall be considered full compensation for furnishing all materials and work necessary to construct the barricade as detailed hereon.

① 75 millimeter center mount yellow reflector, attached to sign post with 4.8 x 32 millimeter slotted pan head screws.

② Barricade shall extend to within 0.6 meters from the top end of the concrete collar.

③ 3 millimeter aluminum panel with Type III or IV retroreflective sheeting on both sides.

④ Reflectorized red stripes on back parallel to red stripes on front.

⑤ All delineator posts shall have a minimum embedment of 0.8 meters.

⑥ 6.4 millimeter diameter steel cable.

LIST OF MATERIALS FOR BARRICADING AT MEDIAN CROSSOVERS

Quantities for Detail Sheet				Items
531-1A	531-1B	531-1C	531-1D	
19	18	20	19	Type 2 Steel Delineator Posts
2	2	2	2	100 mm x 100 mm (Nominal) Sign Post
44	42	46	44	75 mm Yellow Reflectors, center mounted
19	18	20	19	4.8 mm x 50 mm slotted pan head bolts and nuts
6	6	6	6	4.8 mm x 32 mm slotted pan head screws
20	19	21	20	230 mm x 1220 mm Aluminum panels (red on white)
38	36	40	38	9.5 mm Cable clamps, lock washers and nuts
80	76	84	80	6.4 mm Cable clamps, neoprene washers and self locking nuts
4	4	4	4	9.5 mm x 150 mm Eye bolts, washers and nuts
4	4	4	4	6.4 mm Cable clamps
163 m	152 m	174 m	166 m	Approximate length of 6.4 mm diameter Steel Cable
80 m	74 m	85 m	81 m	Distance from Sign Post to Sign Post based on Note ②

All dimensions given in millimeters unless noted.

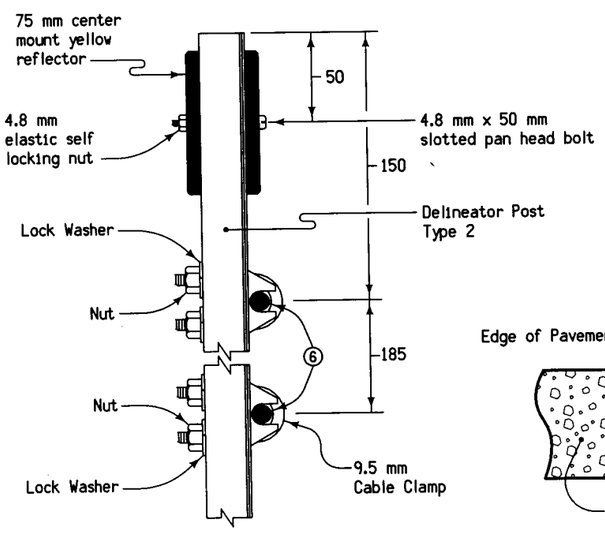

DELINEATOR POST ATTACHMENT DETAILS

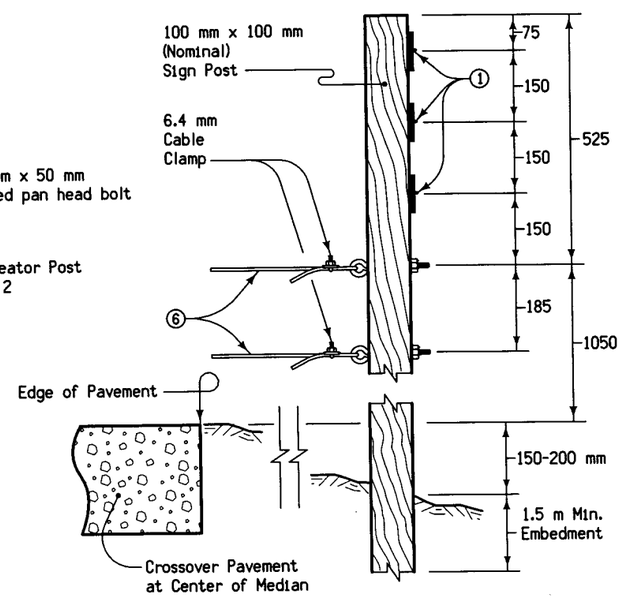

SIGN POST ATTACHMENT DETAILS

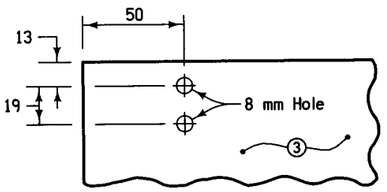

TYPICAL HOLE LOCATION DETAIL 'A'

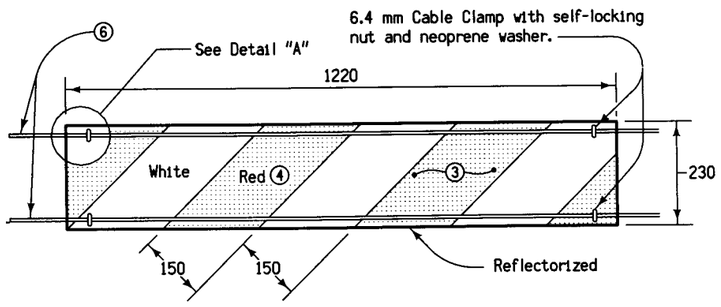

PANEL ATTACHMENT DETAILS

M — METRIC VERSION

Iowa Department of Transportation
Project Development Division

DETAIL SHEET 540-13

REVISION: Metric conversion of Detail Sheet 540-13 no. 5 (dated 10-22-93).

REVISION NO.	REVISION DATE
5	12-08-95

DETAILS OF BARRICADE AT CROSSOVER

DESIGN TEAM	METRIC		COUNTY	PROJECT NUMBER	SHEET NUMBER
ABRAMS/MACKEY/HALVERSON		POTTAWATTAMIE		IM-680-1(126)00--13-78	U.06

14-NOV-1996 15:55 gmackey /usr/svr1/usr4/ord/5a/k78680126.u02

D1

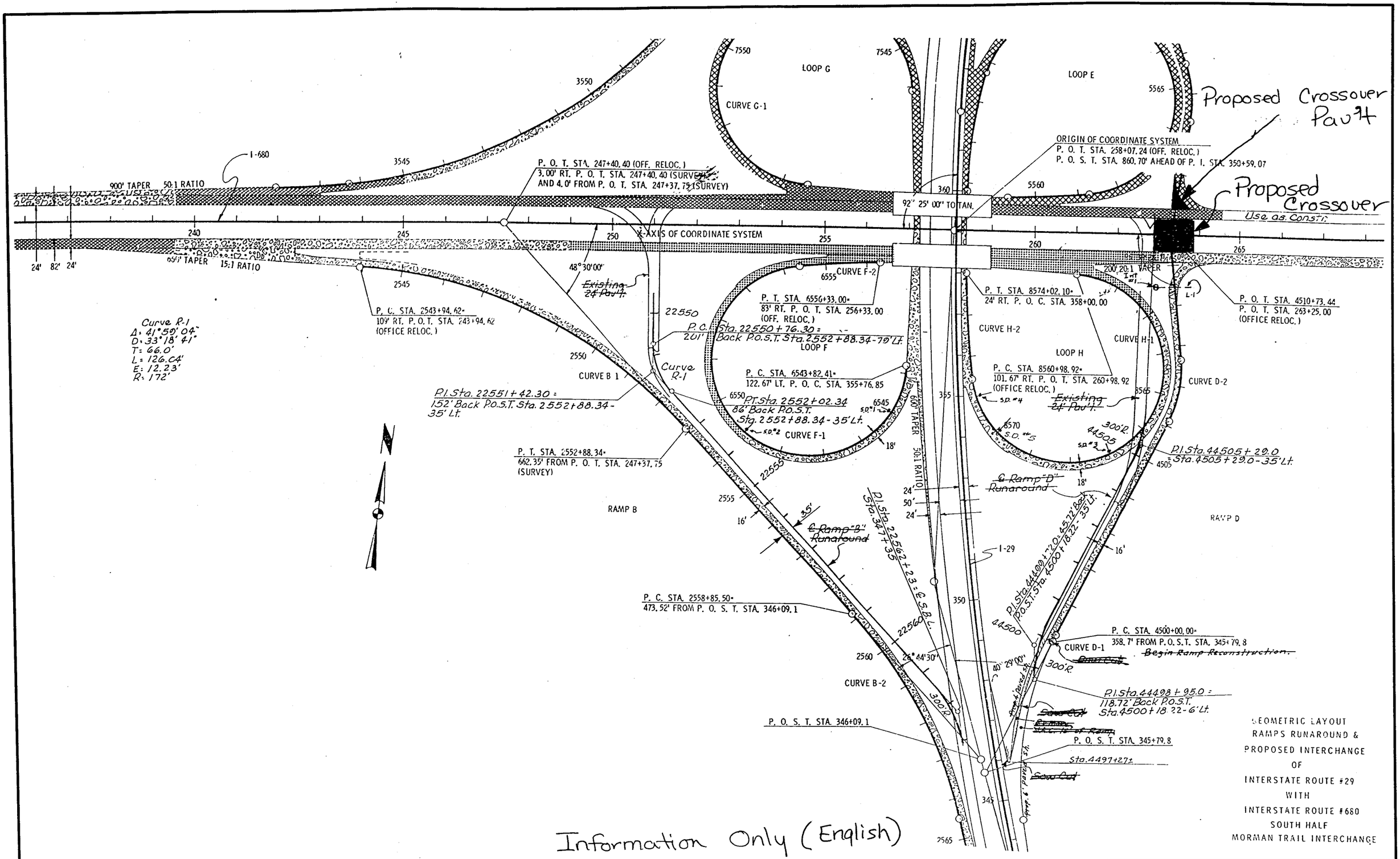

GEOMETRIC LAYOUT
RAMPS RUNAROUND &
PROPOSED INTERCHANGE
OF
INTERSTATE ROUTE #29
WITH
INTERSTATE ROUTE #680
SOUTH HALF
MORMAN TRAIL INTERCHANGE

DESIGN TEAM ABRAMS/MACKEY/HALVERSON	METRIC		POTTAWATTAMIE COUNTY	PROJECT NUMBER IM-680-1(126)00--13-78	SHEET NUMBER U.07

4-NOV-1996 15:00 rhalver /usr/svr1/usr4/ord/5a/k78680126.u04

D1