GETTING YOU THERE

I-80/I-380 SYSTEMS INTERCHANGE

AGC MEETING – FEB 14, 2018

MEETING GOALS

- Overview of Program
- Traffic Management Plan (TMP)
  - Keep two lanes open in each direction on the interstate
  - No Traffic Chutes Over the Winter
  - Closures only allowed over-night (9PM – 6AM)
- Roadway Critical Sections
- Bridge Constructability
  - I380 Over I80
  - I380 North Leg Bridges over RR & US 6
  - Ramp H Flyover Bridge over Ramp A
- Other Project Items (Geotech, Trails, Utilities)
- Feedback from AGC using Voting Buttons
- Interactive Format with limited time

CONSTRUCTION SCHEDULE

TASK NAME	DURATION (DAYS)	START	FINISH	2018				2019				2020				2021				2022				2023				2024			
				Q1	Q2	Q3	Q4	Q1	Q2	Q3	Q4	Q1	Q2	Q3	Q4	Q1	Q2	Q3	Q4	Q1	Q2	Q3	Q4	Q1	Q2	Q3	Q4	Q1	Q2	Q3	Q4
FY 2019	909	7/18/18	10/2/20			27 MONTHS																									
FY 2020	586	6/19/19	11/20/20							17 MONTHS																					
FY 2021	586	6/17/20	11/19/21											17 MONTHS																	
FY 2022	838	6/16/21	6/30/23															24 MONTHS													
FY 2023	869	6/22/22	8/2/24																			26 MONTHS									
FY 2024	546	7/19/23	11/15/24																							16 MONTHS					

PROGRAMMING ESTIMATE

Year	Stage	Cost (1)				Earthwork (3)			Pavement (4)		Subbase Material (4)	
		Bridge	Road	Misc. (2)	Total	Class 10	Waste	Contractor Furnished	Permanent	Temporary	Granular Subbase	Special Backfill
2019	1	$31,229,000	$6,483,000	$769,000	$38,481,000	550,000 CY	150,000 CY	--	--	--	--	--
2020	2	$9,318,000	$31,345,640	$2,654,000	$43,317,640	1,100,000 CY	--	60,000 CY	--	94,000 SY	--	18,000 CY
2021	3	$14,134,000	$47,102,990	$3,579,000	$64,815,990	30,000 CY	--	8,000 CY	204,000 SY	2,000 SY	220,000 SY	72,000 CY
2022	4	$39,964,000	$23,622,000	$2,298,000	$65,884,000	200,000 CY	--	70,000 CY	147,000 SY	22,000 SY	154,000 SY	51,000 CY
2023	5	$27,494,000	$23,690,100	$2,804,000	$53,988,100	70,000 CY	270,000 CY	--	162,000 SY	7,000 SY	170,000 SY	57,000 CY
2024	6	$28,032,000	$16,773,000	$1,495,000	$46,300,000	28,000 CY	150,000 CY	--	71,000 SY	--	75,000 SY	25,000 CY

(1) Does not include other project costs such as: ROW, utility relocations, wetland/stream mitigation, transit/traffic operations mitigation (highway helper, towing program, express bus...), etc.

(2) Misc Includes : Erosion Control, Lighting, Signing.

(3) Preliminary Quantities; Staged Balance to be determined.

(4) Pavement and Subbase Type and Thickness to be determined.

FY 2019 / FY 2020

- FY 2019 (2 year duration)
  - Southwest Quadrant
  - Ramp H Bridge Flyover (EB – NB)
  - Grading - Ramp B,G, A and H
  - Kansas Ave & 340th Street
- FY 2020 (2 year duration)
  - Northwest & Southeast Quadrants
  - I-380 Center Bridges (Over Ramp F, I-80, RR, US6)
  - I-80 Over Clear Creek - Temp Bridge Widening
  - Shoulder Strengthening
  - Grading – I-380 north & Ramps C, E, F, D
- Quantities
  - Top Soil Shortage

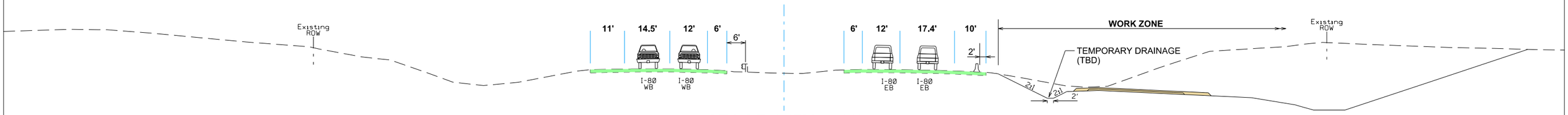

STAGE 1 (FY 2019)

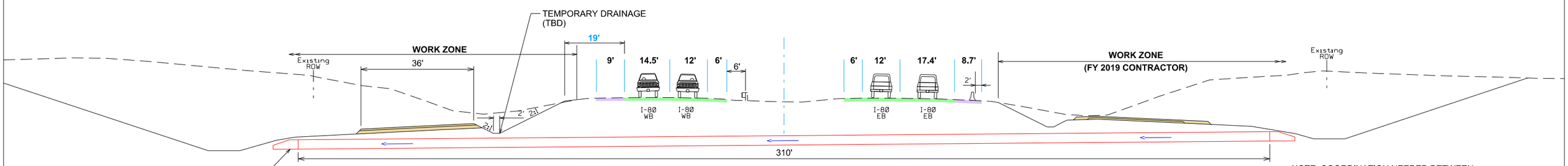

STAGE 2 (FY 2020)

NOTE: COORDINATION NEEDED BETWEEN CONTRACTORS FOR PIPE CONSTRUCTION

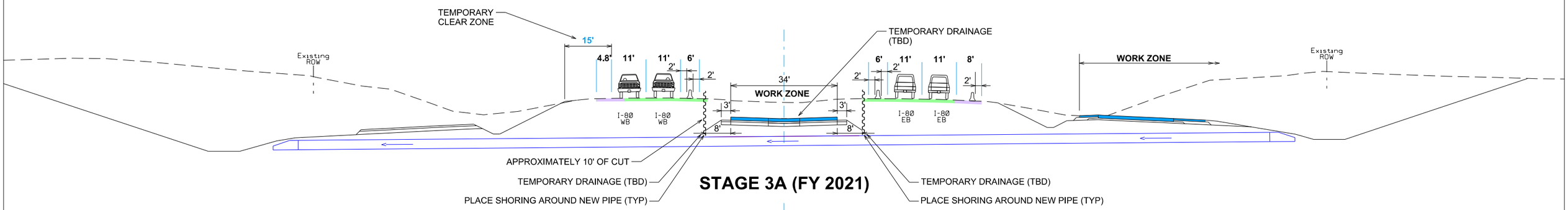

STAGE 3A (FY 2021)

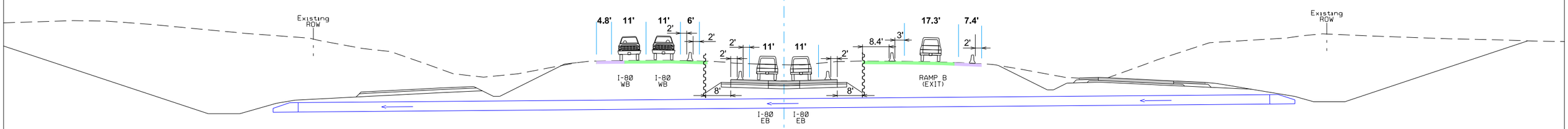

STAGE 4A (FY 2022)

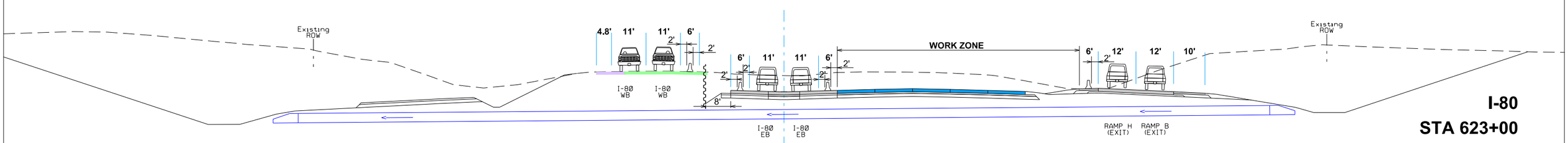

STAGE 4C (FY 2022)

30 Scale

I-80
STA 623+00
(NEAR 36" PIPE)

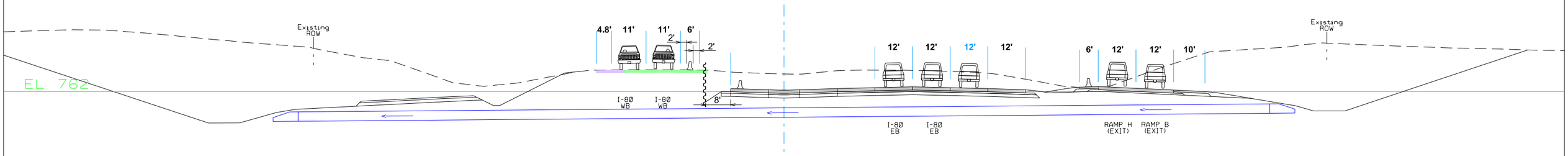

STAGE 4D (FY 2022)

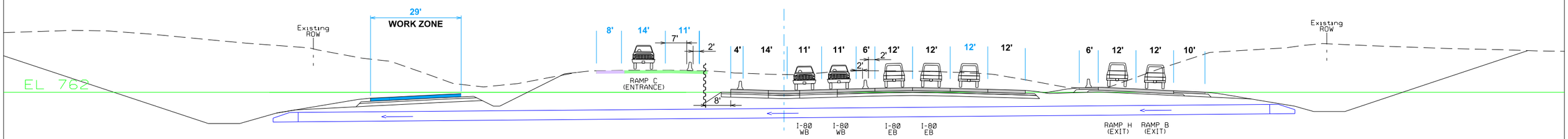

STAGE 5B (FY 2023)

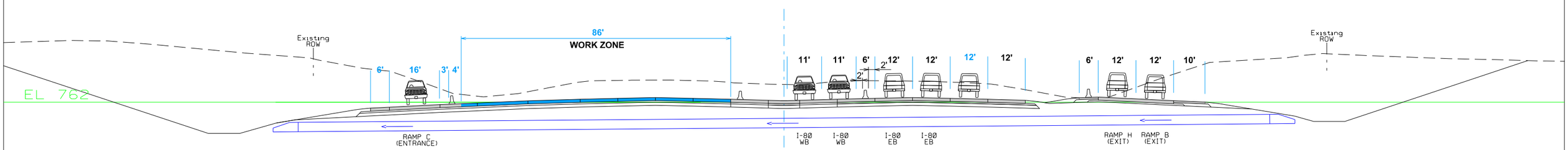

STAGE 5D (FY 2023)

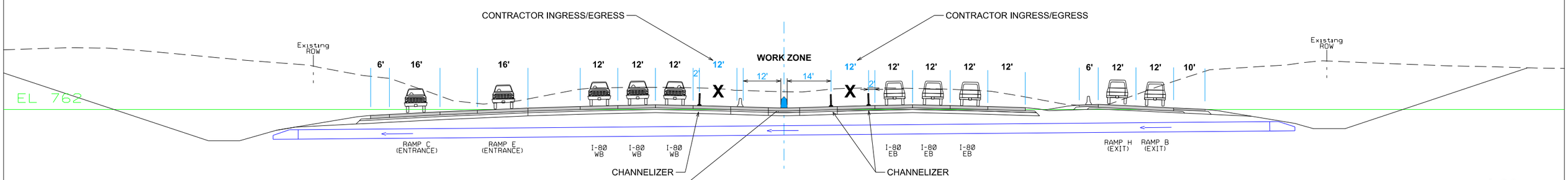

STAGE 6C (FY 2024)

30 Scale

I-80
STA 623+00
(NEAR 36" PIPE)

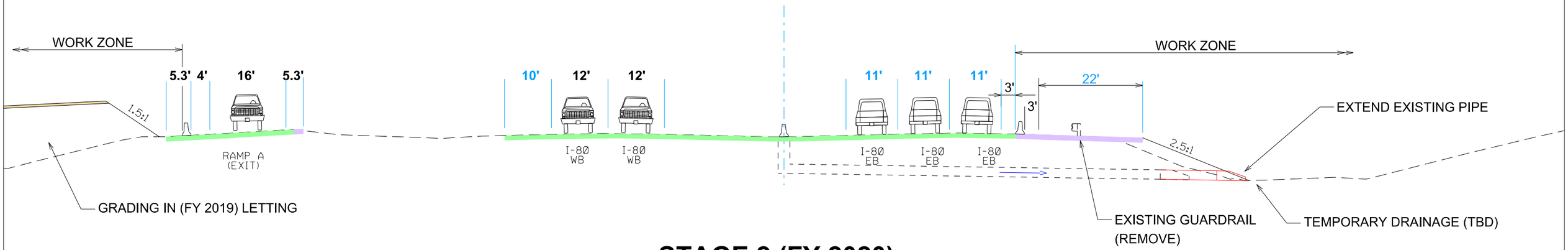

STAGE 2 (FY 2020)

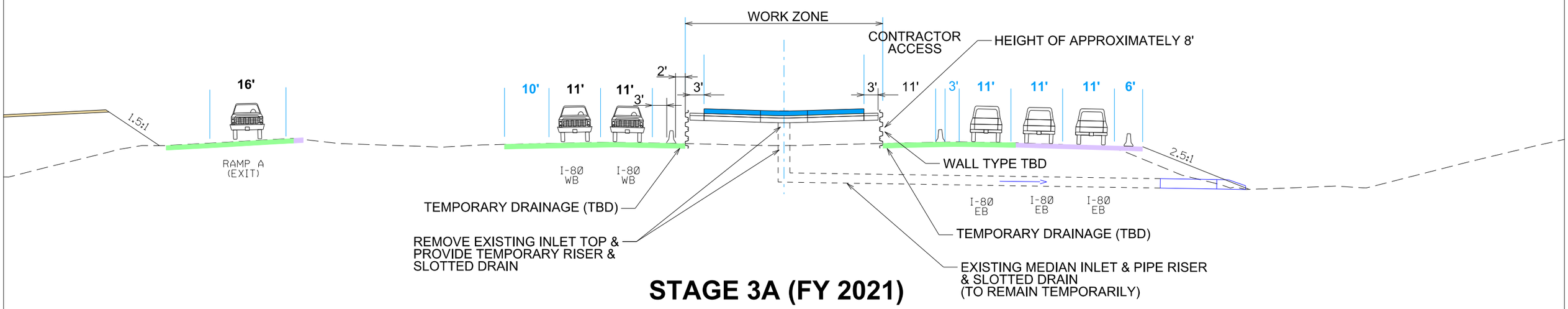

STAGE 3A (FY 2021)

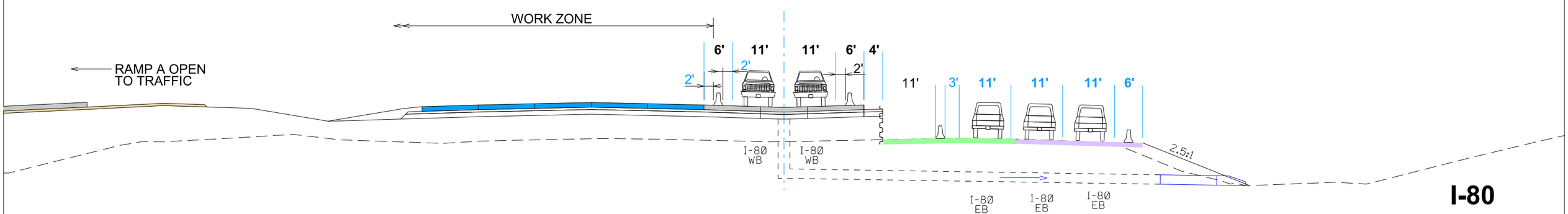

20 Scale

STAGE 4D (FY 2022)

I-80

STA 659+00

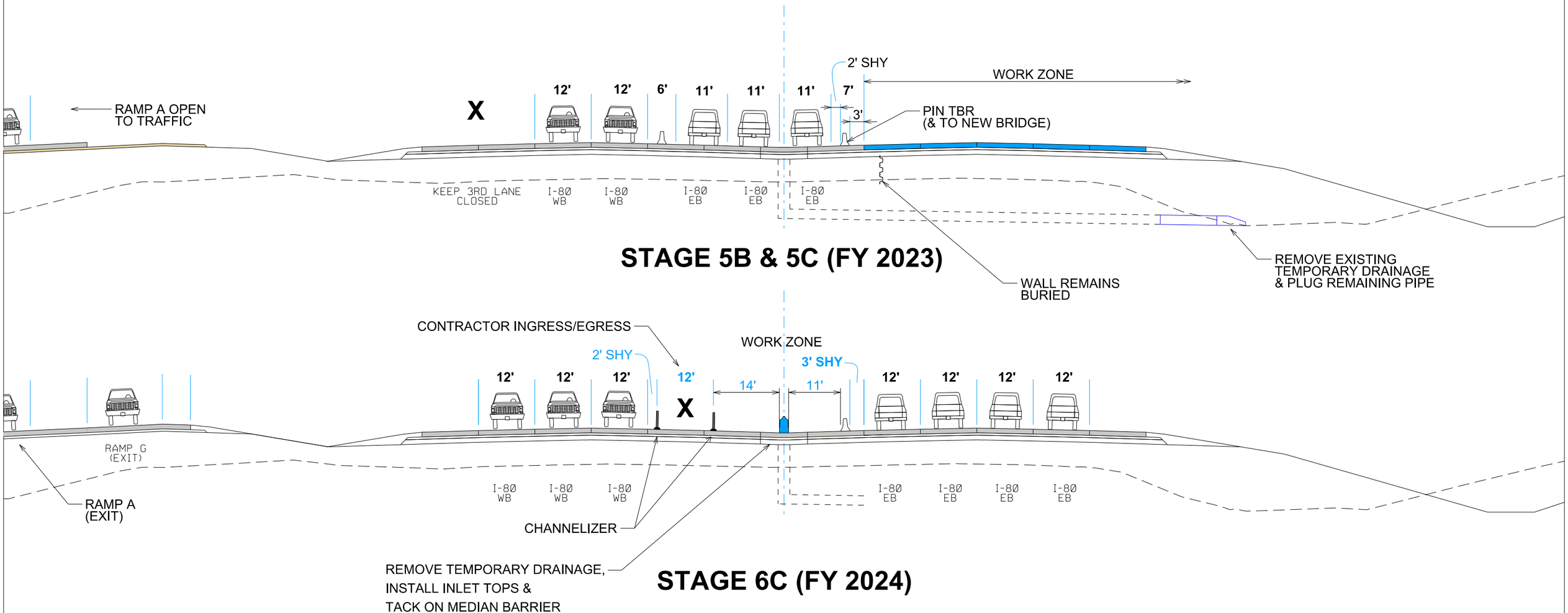

20 Scale

I-80

STA 659+00

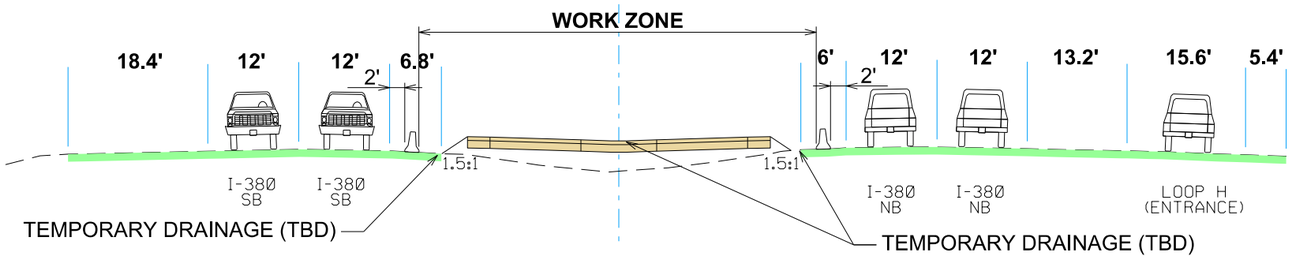

STAGE 1 & 2 (FY 2019 & FY 2020)

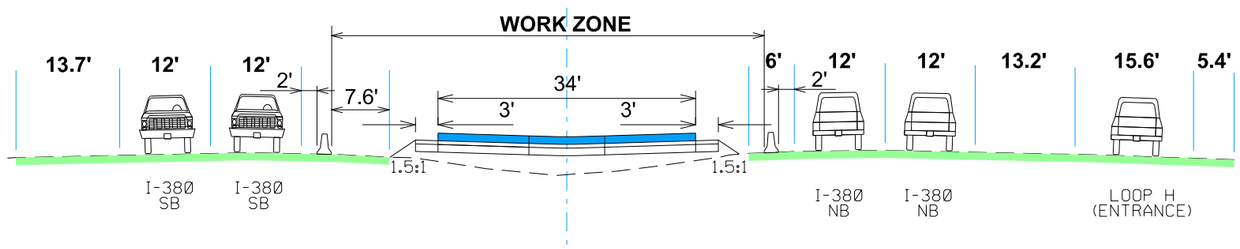

STAGE 3A (FY 2021)

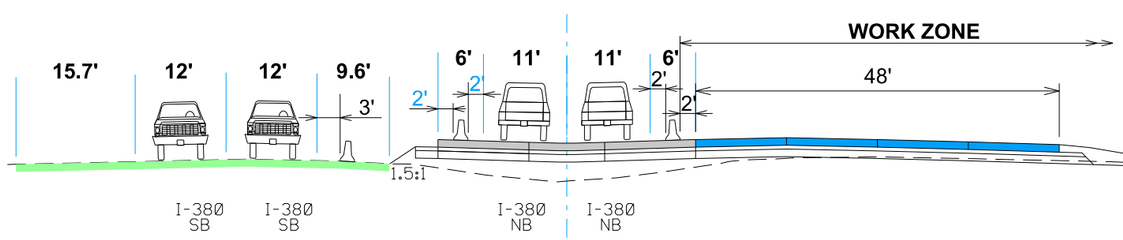

STAGE 4B (FY 2022)

20 Scale

I-380 / US218

STA 1158+00

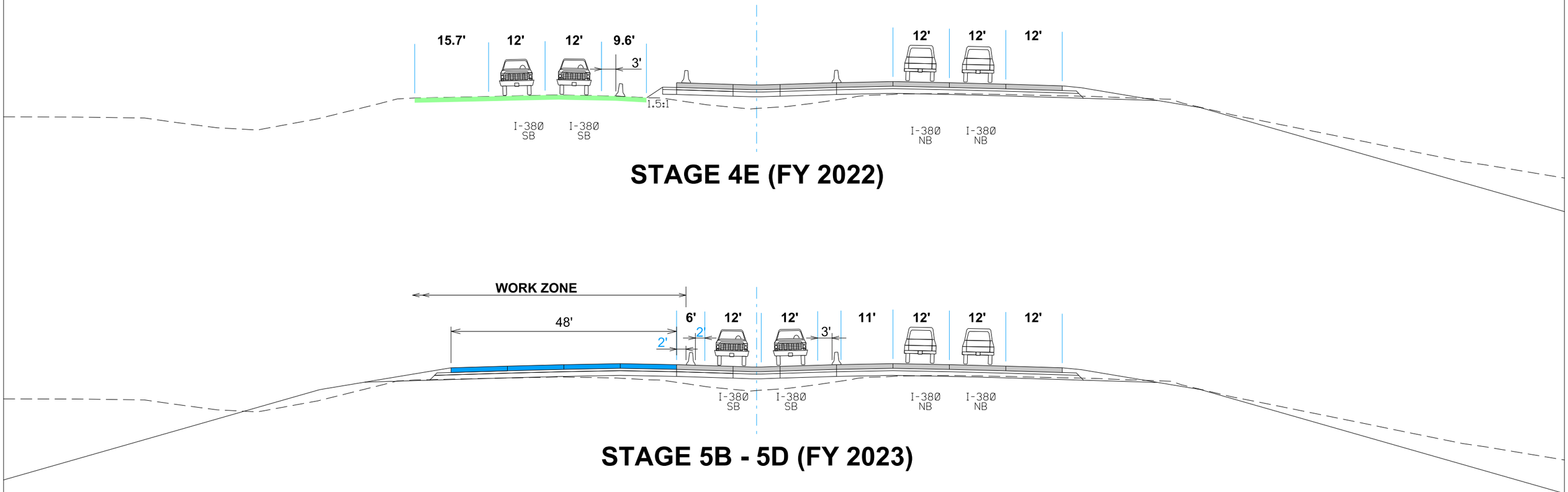

STAGE 4E (FY 2022)

STAGE 5B - 5D (FY 2023)

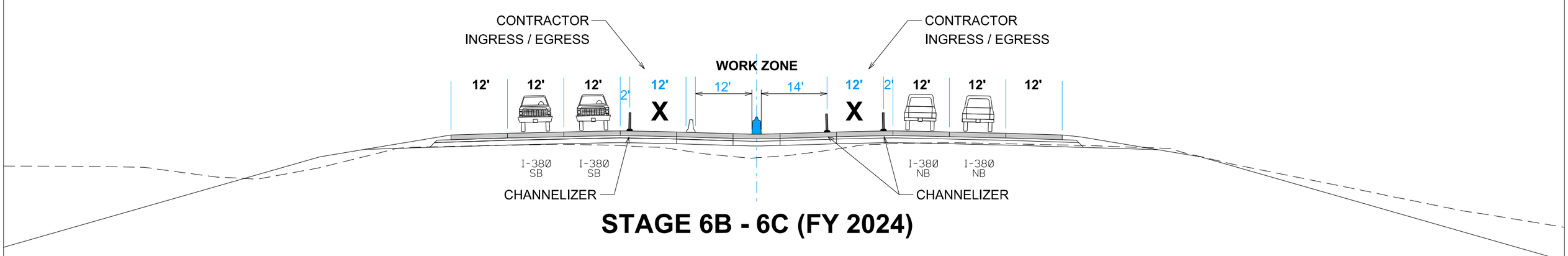

STAGE 6B - 6C (FY 2024)

20 Scale

I-380 / US218
STA 1158+00

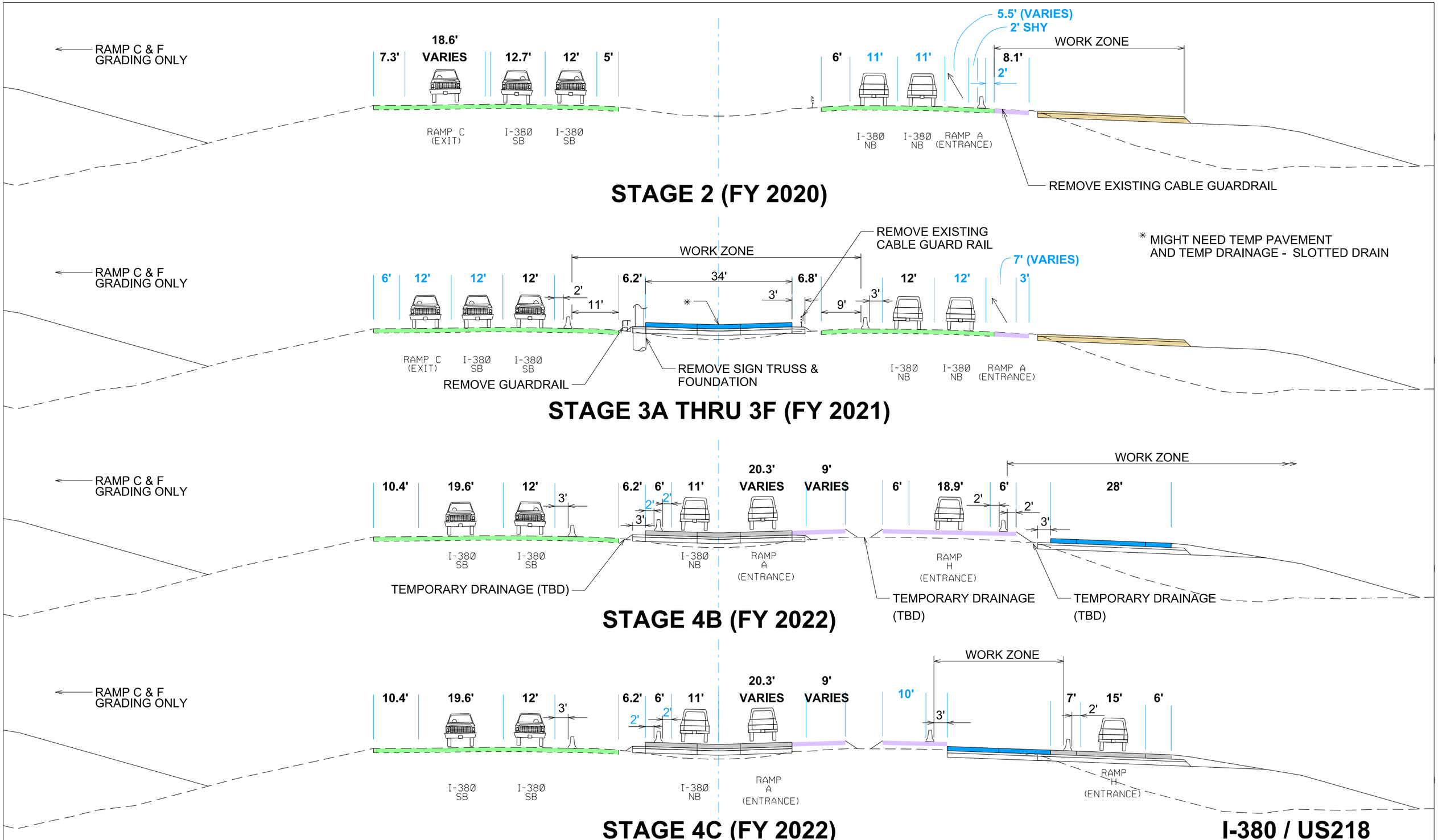
RAMP C & F GRADING ONLY
18.6'
7.3'
VARIES
12.7'
12'
5'
RAMP C (EXIT)
I-380 SB
I-380 SB
6'
11'
11'
5.5' (VARIES)
2' SHY
WORK ZONE
8.1'
2'
I-380 NB
I-380 NB
RAMP A (ENTRANCE)
REMOVE EXISTING CABLE GUARDRAIL
STAGE 2 (FY 2020)
RAMP C & F GRADING ONLY
6'
12'
12'
12'
2'
11'
WORK ZONE
6.2'
34'
6.8'
3'
9'
3'
REMOVE EXISTING CABLE GUARD RAIL
12'
12'
7' (VARIES)
3'
* MIGHT NEED TEMP PAVEMENT AND TEMP DRAINAGE - SLOTTED DRAIN
RAMP C (EXIT)
I-380 SB
I-380 SB
REMOVE GUARDRAIL
REMOVE SIGN TRUSS & FOUNDATION
I-380 NB
I-380 NB
RAMP A (ENTRANCE)
STAGE 3A THRU 3F (FY 2021)
RAMP C & F GRADING ONLY
10.4'
19.6'
12'
3'
6.2'
6'
11'
2'
2'
3'
20.3'
VARIES
9'
VARIES
6'
18.9'
2'
6'
2'
3'
WORK ZONE
28'
I-380 SB
I-380 SB
I-380 NB
RAMP A (ENTRANCE)
RAMP H (ENTRANCE)
TEMPORARY DRAINAGE (TBD)
TEMPORARY DRAINAGE (TBD)
TEMPORARY DRAINAGE (TBD)
STAGE 4B (FY 2022)
RAMP C & F GRADING ONLY
10.4'
19.6'
12'
3'
6.2'
6'
11'
2'
2'
20.3'
VARIES
9'
VARIES
10'
WORK ZONE
3'
7'
15'
6'
2'
I-380 SB
I-380 SB
I-380 NB
RAMP A (ENTRANCE)
RAMP H (ENTRANCE)
STAGE 4C (FY 2022)
20 Scale
I-380 / US218
STA 1184+00

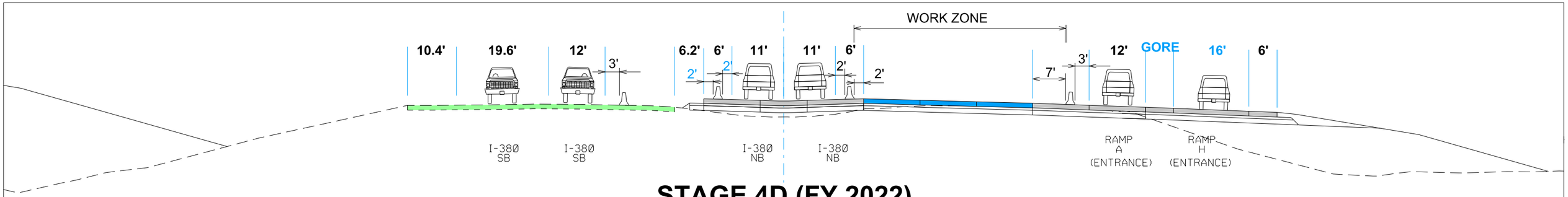

STAGE 4D (FY 2022)

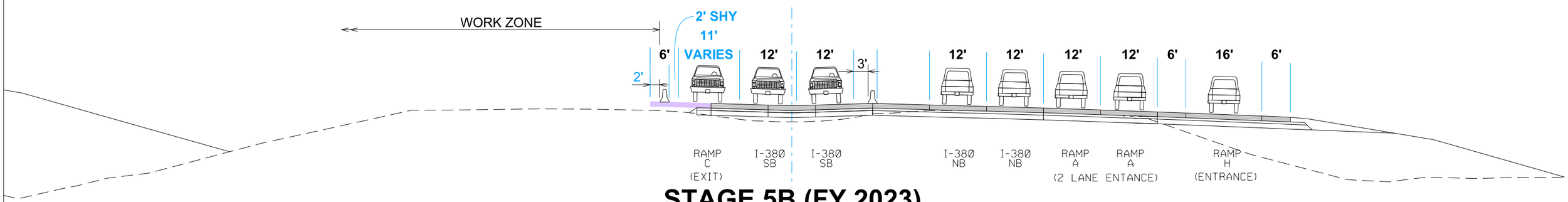

STAGE 5B (FY 2023)

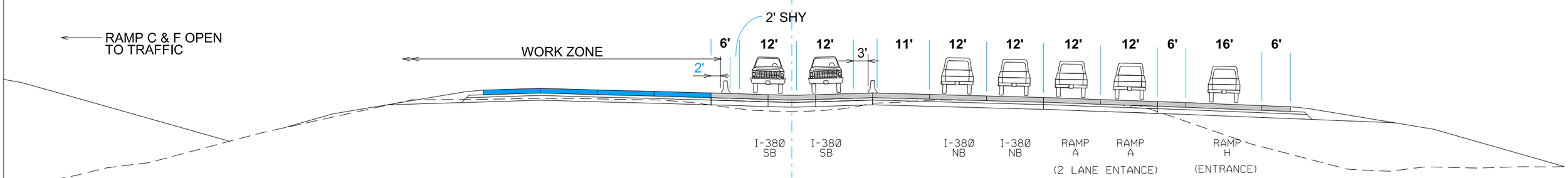

STAGE 5D (FY 2023)

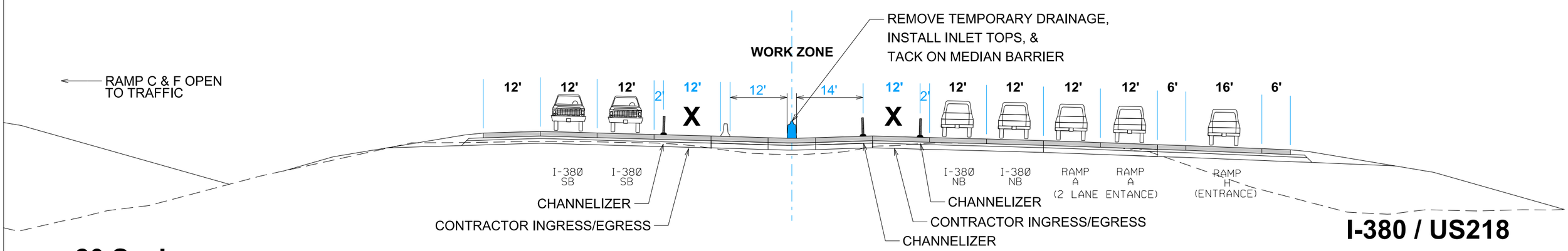

STAGE 6B & 6C (FY 2024)

20 Scale

I-380 / US218

STA 1184+00

CUT / FILL LEGEND

0' - 5' CUT	0' - 5' FILL
5' - 10' CUT	5' - 10' FILL
10' - 20' CUT	10' - 20' FILL
20' - 30' CUT	20' - 30' FILL
30' - 40' CUT	30' - 40' FILL
40' - 50' CUT	
50' - 60' CUT	

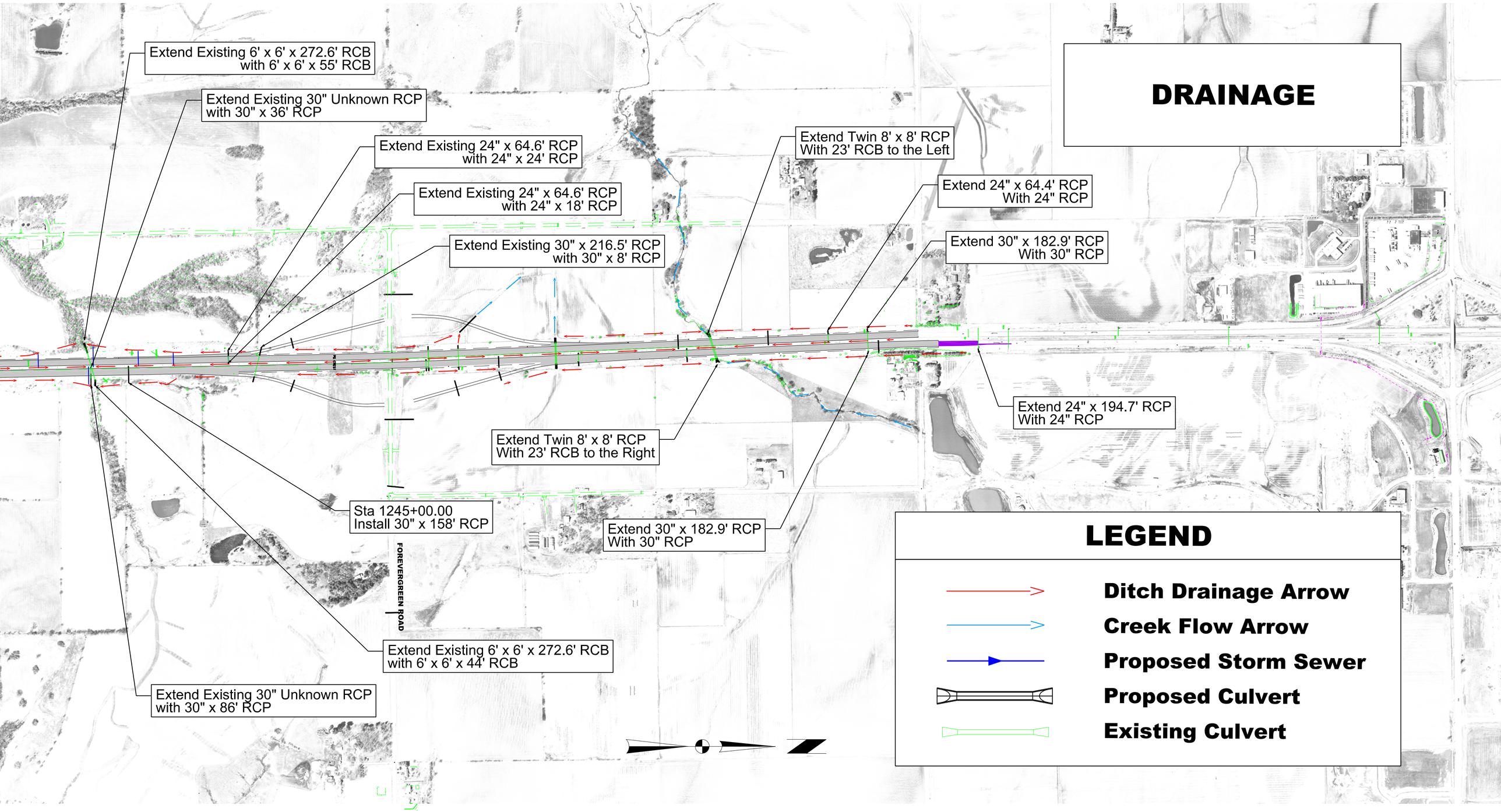

AGC MEETING

February 14th, 2018

BENCH MARK NO. 577 STA 11235+00.08 16.06' LT. "X" ON E SIDE OVERHEAD SIGN BASE ELEV=752.765

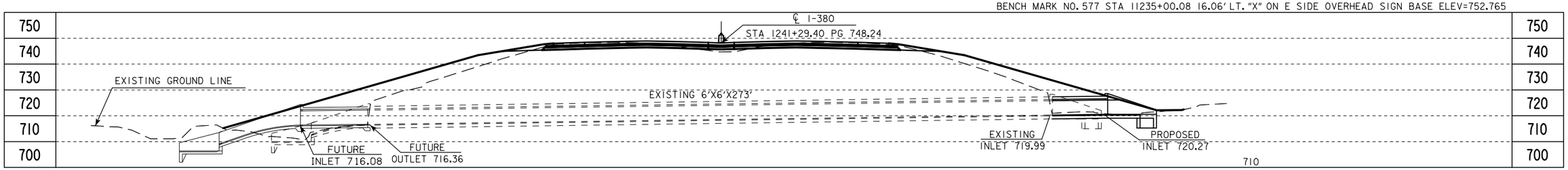

LONGITUDINAL SECTION ALONG ℄ CULVERT

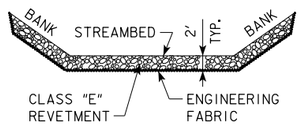

TYPICAL CHANNEL PROTECTION

ESTIMATED REVETMENT QUANTITIES INCLUDED WITH ROAD PLANS

LOCATION	REVETMENT CL. "E" (TON)	ENGINEERING FABRIC (SY)	EXCAVATION (CY)
RIGHT	120	140	70

EXCAVATION QUANTITY CALCULATED FROM GRADING SURFACE. QUANTITIES SHOWN FOR INFORMATION ONLY. SEE ROAD SHEETS.

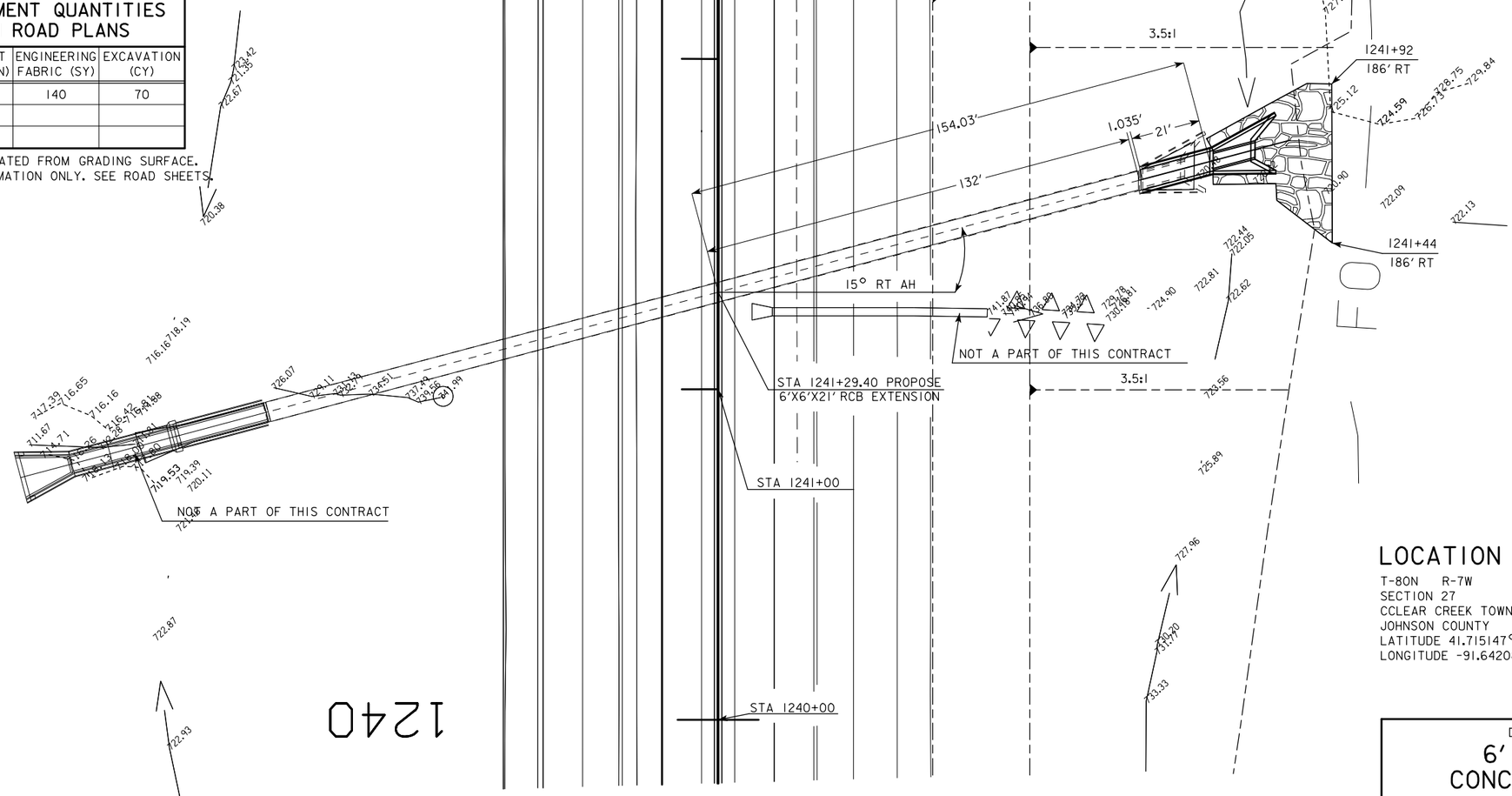

SITUATION PLAN

OLD DES # 4068
REMOVE HDWL TO
FACE PA PARAPET

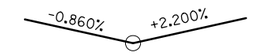

VPI STA = 1242+97.563 VC = 800'
VPI ELEV = 745.77

PROPOSED PROFILE GRADE I-380

N

0 ENGLISH 40
SCALE IN FEET

HYDRAULIC DATA

DRAINAGE AREA = 164 ACRES R

UTILITIES LEGEND:

STATE OF IOWA (ICN)

LOCATION

T-80N R-7W
SECTION 27
CCLEAR CREEK TOWNSHIP
JOHNSON COUNTY
LATITUDE 41.715147°
LONGITUDE -91.642086°

TRAFFIC ESTIMATE

200_	AADT	18,200	V.P.D.
202_	AADT	84,700	V.P.D.
202_	DHV	-	V.P.H.
TRUCKS		-	%
TOTAL DESIGN ESALs		-	

PRELIMINARY

DESIGN FOR 15° SKEW RT AH

6' X 6' REINFORCED CONCRETE BOX CULVERT EXTENSION SITUATION PLAN

STATION 1241+29.40 ?

JOHNSON COUNTY

IOWA DEPARTMENT OF TRANSPORTATION - HIGHWAY DIVISION

DESIGN SHEET NO. ____ OF ____ FILE NO. 30864 DESIGN NO. 1119

FILE NO.	ENGLISH	DESIGN TEAM Flattery\Gansen	JOHNSON COUNTY	PROJECT NUMBER IMN-080-6(235)239--0E-52	SHEET NUMBER V.9

7:57:06 AM 3/24/2015 egansen pw:\\projectwise.dot.int.lan:PWMain\Documents\Projects\5208001002\Design\52080235V2.sht

APPENDIX 4

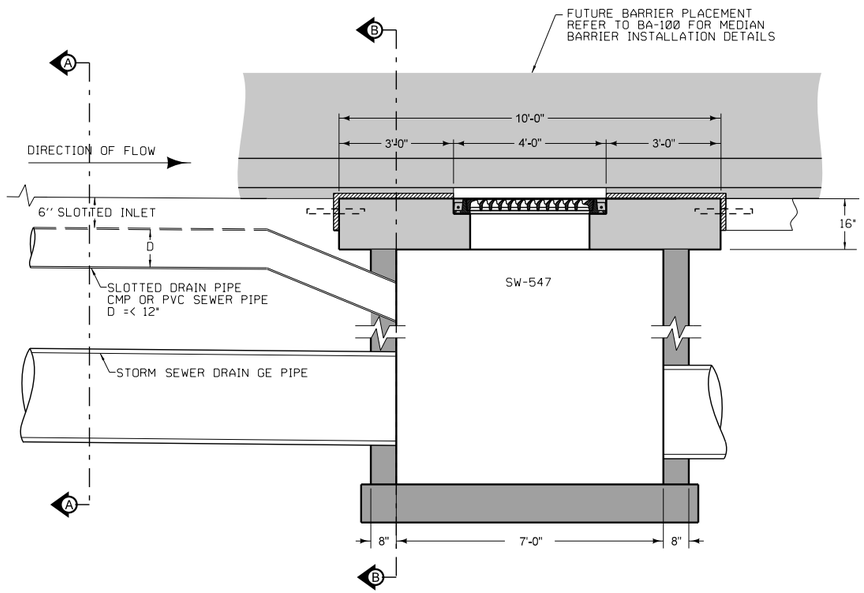

CONNECTION TO MEDIAN INTAKE

PROFILE VIEW

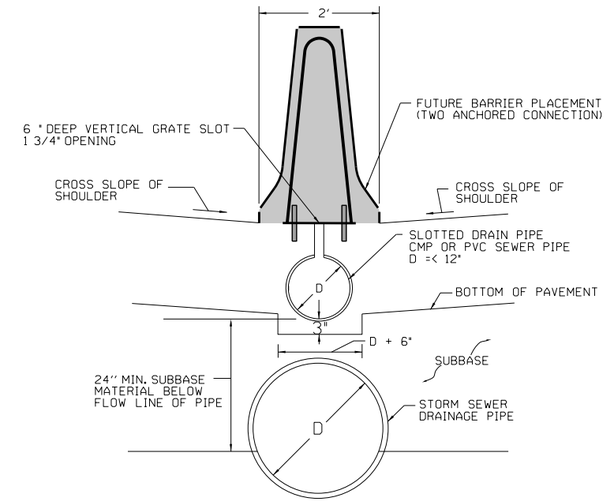

CROSS SECTION VIEW

SECTION A-A

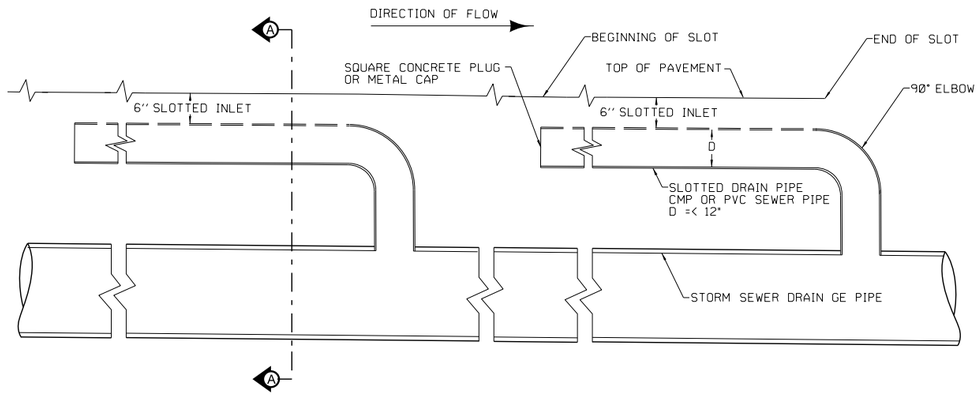

CONNECTION TO STORM SEWER PIPE

PROFILE VIEW

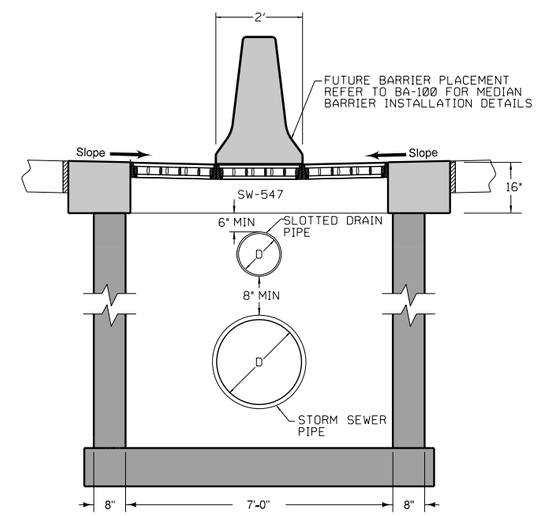

CONNECTION TO MEDIAN INTAKE

CROSS SECTION VIEW

SECTION B-B

MEDIAN SLOTTED DRAIN INSTALLATION

FILE NO.	ENGLISH	DESIGN TEAM	COUNTY	PROJECT NUMBER	IMN-080-6(235)239--0E-52	SHEET NUMBER

6:40:45 PM 4/28/2016 zalsama \\hrgdmnas\data\40160001.01\CAD\Design\52080235_DRN_Working.dgn

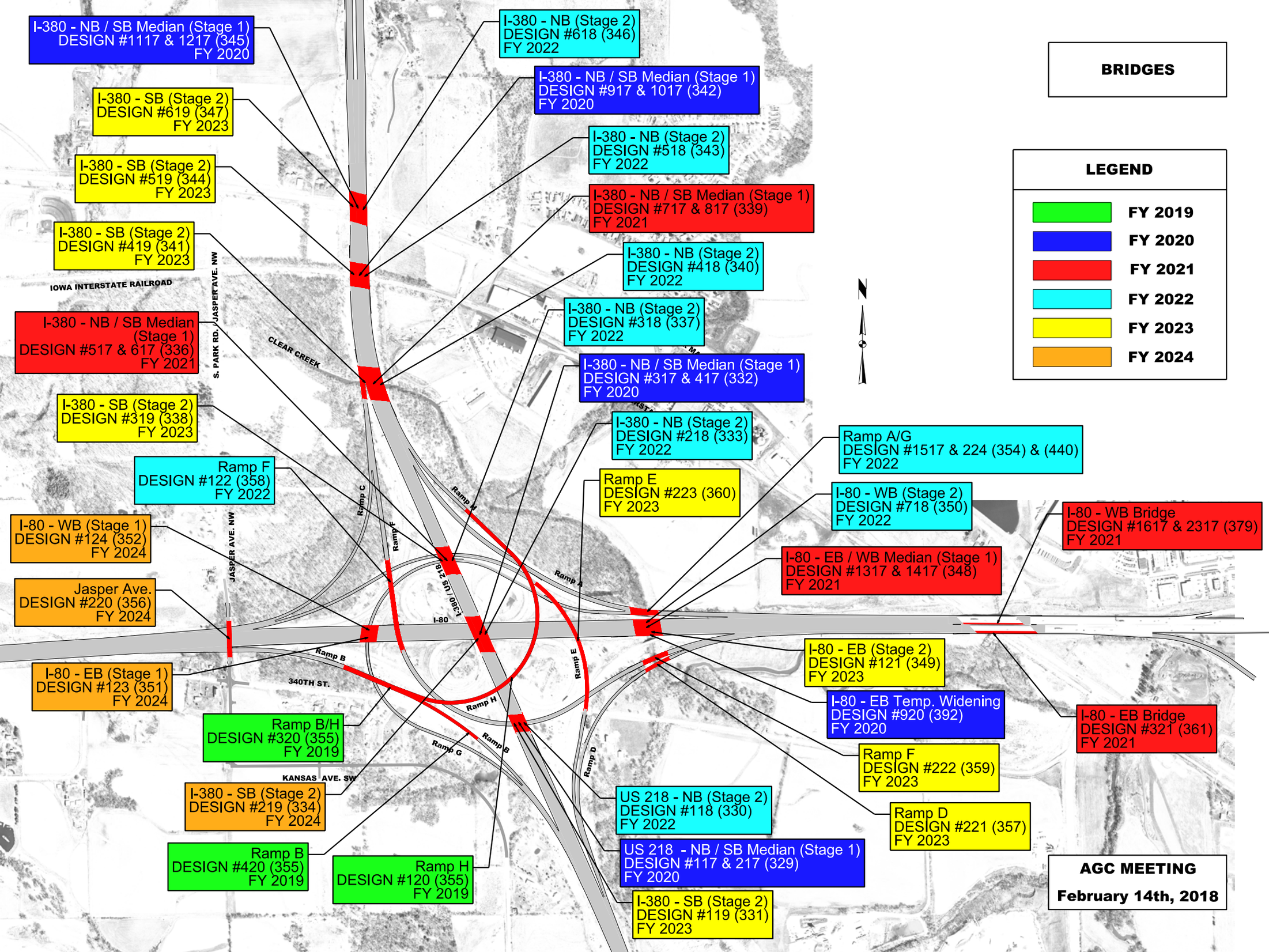
I-380 - NB / SB Median (Stage 1)
DESIGN #1117 & 1217 (345)
FY 2020
I-380 - NB (Stage 2)
DESIGN #618 (346)
FY 2022
I-380 - NB / SB Median (Stage 1)
DESIGN #917 & 1017 (342)
FY 2020
I-380 - SB (Stage 2)
DESIGN #619 (347)
FY 2023
I-380 - NB (Stage 2)
DESIGN #518 (343)
FY 2022
I-380 - SB (Stage 2)
DESIGN #519 (344)
FY 2023
I-380 - NB / SB Median (Stage 1)
DESIGN #717 & 817 (339)
FY 2021
I-380 - SB (Stage 2)
DESIGN #419 (341)
FY 2023
I-380 - NB (Stage 2)
DESIGN #418 (340)
FY 2022
IOWA INTERSTATE RAILROAD
I-380 - NB / SB Median (Stage 1)
DESIGN #517 & 617 (336)
FY 2021
S. PARK RD. / JASPER AVE. NW
CLEAR CREEK
I-380 - NB (Stage 2)
DESIGN #318 (337)
FY 2022
I-380 - NB / SB Median (Stage 1)
DESIGN #317 & 417 (332)
FY 2020
I-380 - SB (Stage 2)
DESIGN #319 (338)
FY 2023
I-380 - NB (Stage 2)
DESIGN #218 (333)
FY 2022
Ramp A/G
DESIGN #1517 & 224 (354) & (440)
FY 2022
Ramp F
DESIGN #122 (358)
FY 2022
Ramp E
DESIGN #223 (360)
FY 2023
I-80 - WB (Stage 2)
DESIGN #718 (350)
FY 2022
I-80 - WB Bridge
DESIGN #1617 & 2317 (379)
FY 2021
I-80 - WB (Stage 1)
DESIGN #124 (352)
FY 2024
I-80 - EB / WB Median (Stage 1)
DESIGN #1317 & 1417 (348)
FY 2021
Jasper Ave.
DESIGN #220 (356)
FY 2024
JASPER AVE. NW
Ramp C
Ramp F
Ramp H
Ramp A
I-380 / US 218
I-80
Ramp E
I-80 - EB (Stage 2)
DESIGN #121 (349)
FY 2023
I-80 - EB (Stage 1)
DESIGN #123 (351)
FY 2024
Ramp B
340TH ST.
Ramp H
I-80 - EB Temp. Widening
DESIGN #920 (392)
FY 2020
I-80 - EB Bridge
DESIGN #321 (361)
FY 2021
Ramp B/H
DESIGN #320 (355)
FY 2019
Ramp G
Ramp B
Ramp D
Ramp F
DESIGN #222 (359)
FY 2023
KANSAS AVE. SW
I-380 - SB (Stage 2)
DESIGN #219 (334)
FY 2024
US 218 - NB (Stage 2)
DESIGN #118 (330)
FY 2022
Ramp D
DESIGN #221 (357)
FY 2023
Ramp B
DESIGN #420 (355)
FY 2019
Ramp H
DESIGN #120 (355)
FY 2019
US 218 - NB / SB Median (Stage 1)
DESIGN #117 & 217 (329)
FY 2020
I-380 - SB (Stage 2)
DESIGN #119 (331)
FY 2023
BRIDGES
LEGEND
FY 2019
FY 2020
FY 2021
FY 2022
FY 2023
FY 2024
N
AGC MEETING
February 14th, 2018

STA 645+00
Center I-380 Bridges over I-80

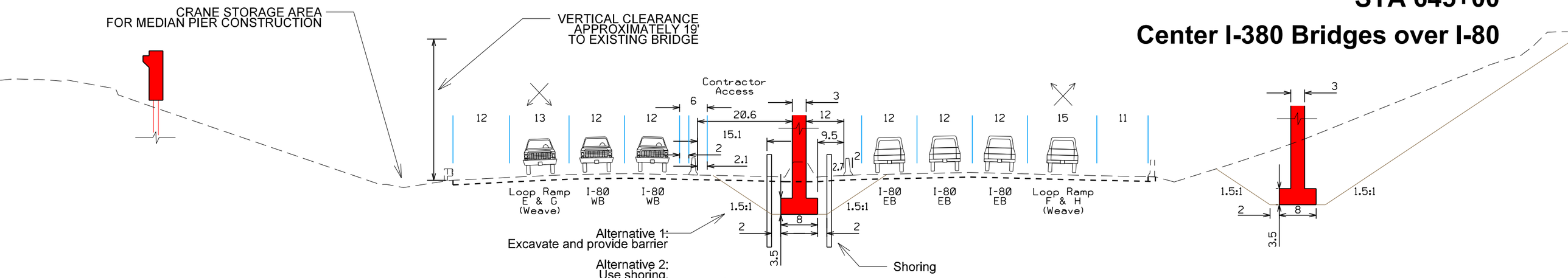

Stage 2 - FY 2020
Pier Work

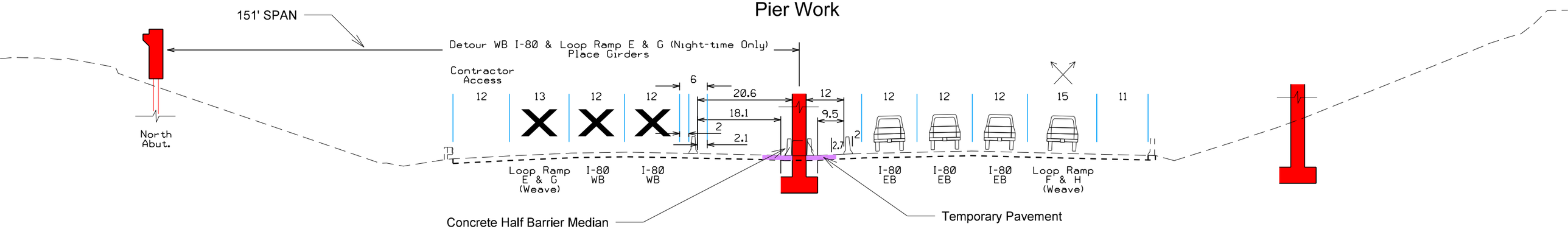

Stage 2 - FY 2020
Girder Placement over WB I-80

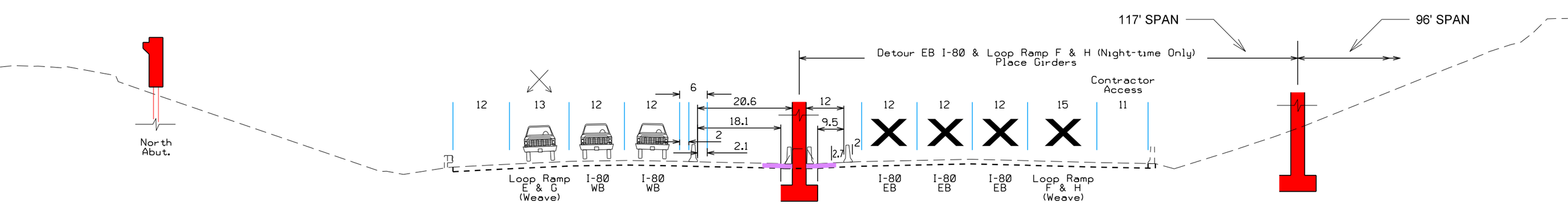

Stage 2 - FY 2020
Girder Placement over EB I-80

20 Scale

Constructability Review
I-380 over I-80 Bridges
Sheet 4 of 13

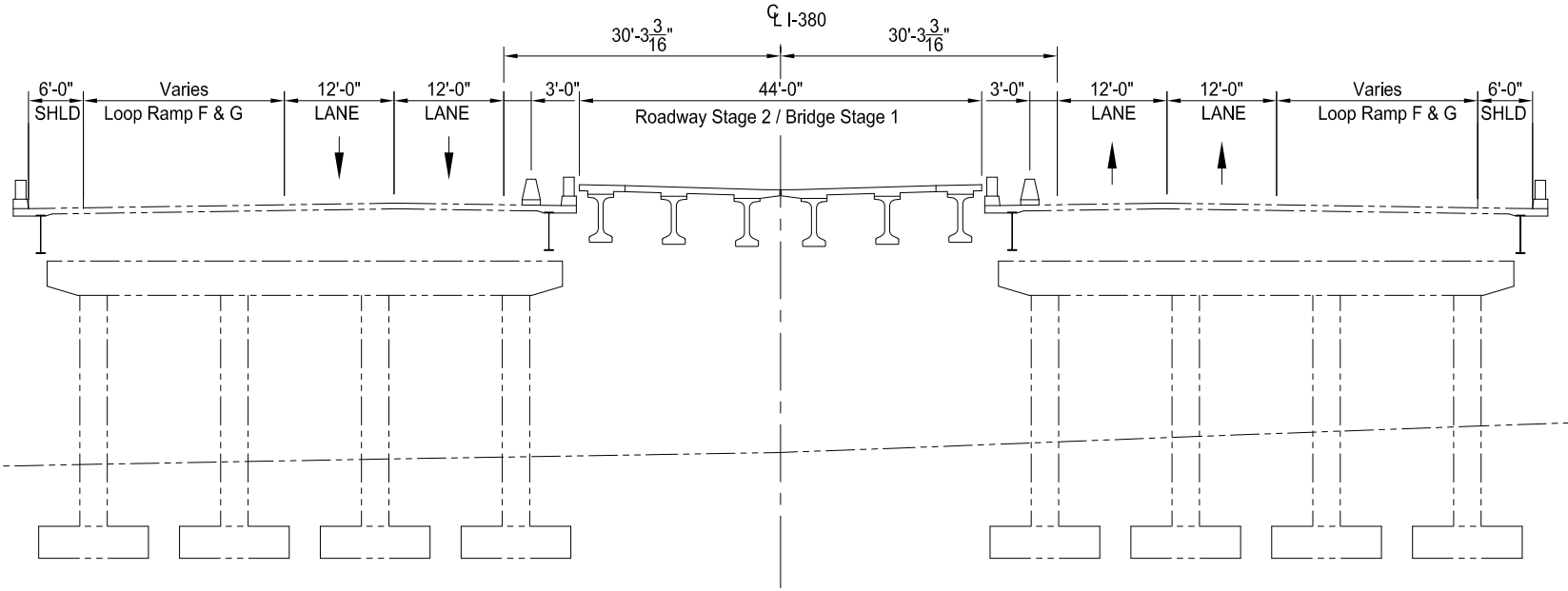

ROADWAY STAGE 2 (2020)

STA 645+00

NB I-380 Bridges over I-80

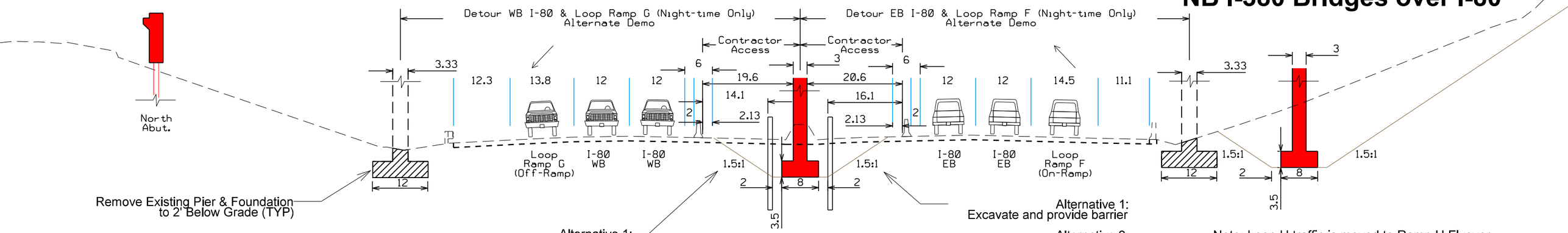

Stage 4B - FY 2022
Demo & Pier Work

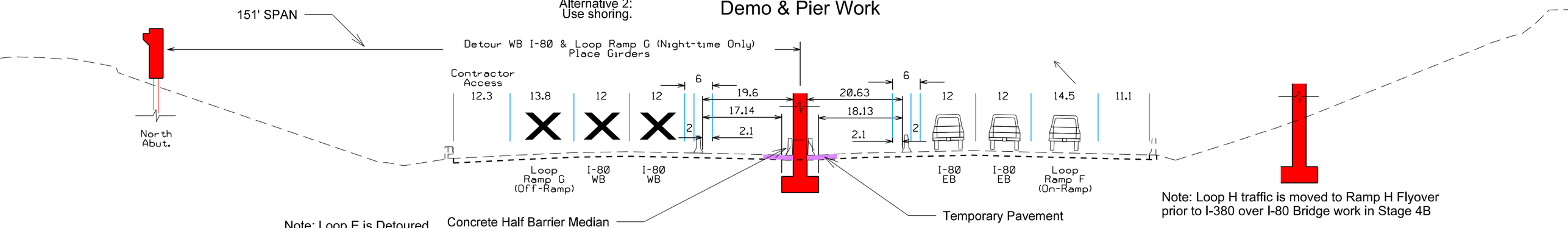

Stage 4B - FY 2022
Girder Placement over WB I-80

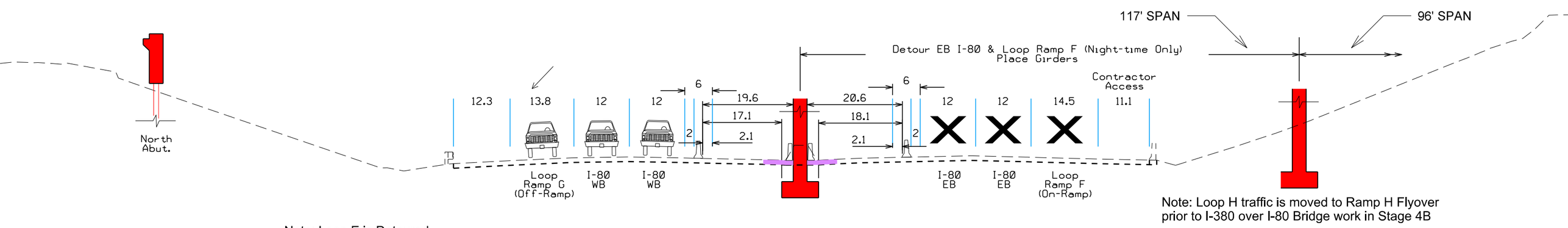

Stage 4B - FY 2022
Girder Placement over EB I-80

20 Scale

Constructability Review

I-380 over I-80 Bridges

Sheet 8 of 13

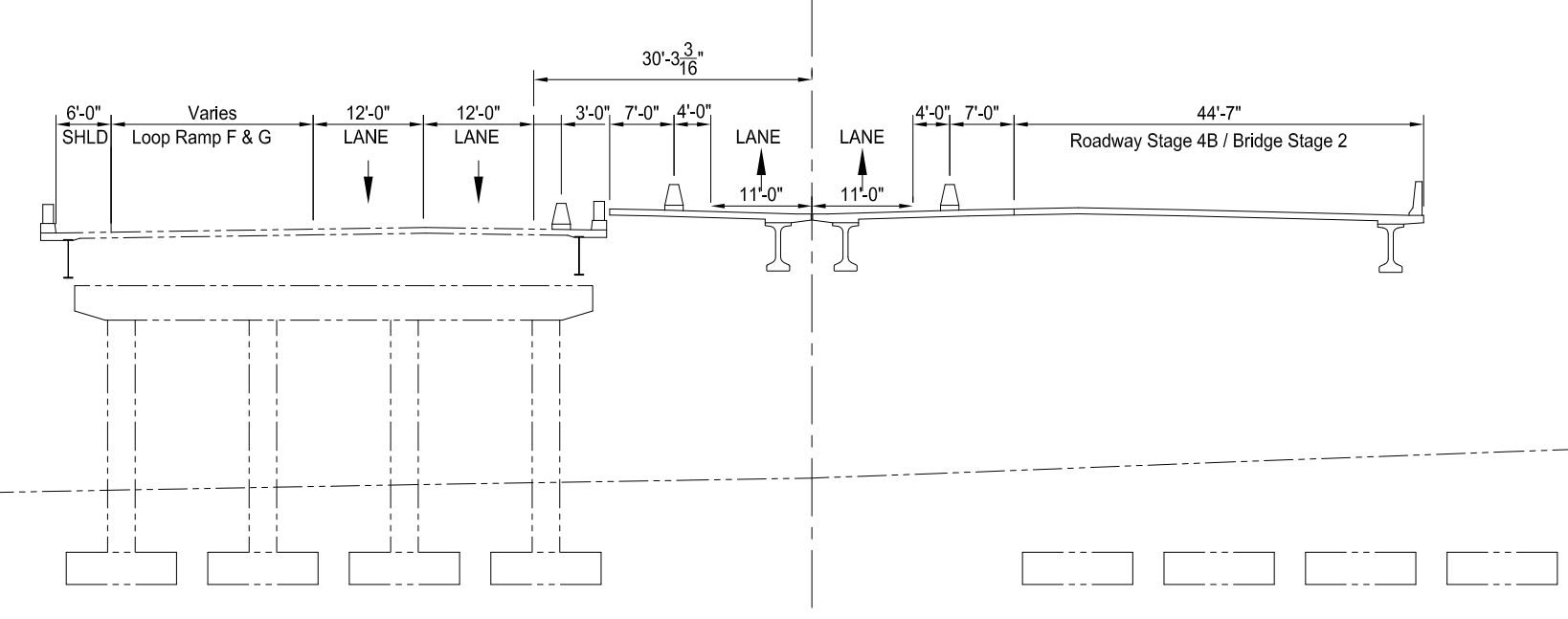

ROADWAY STAGE 4B (2022)

STA 645+00

SB I-380 Bridges over I-80

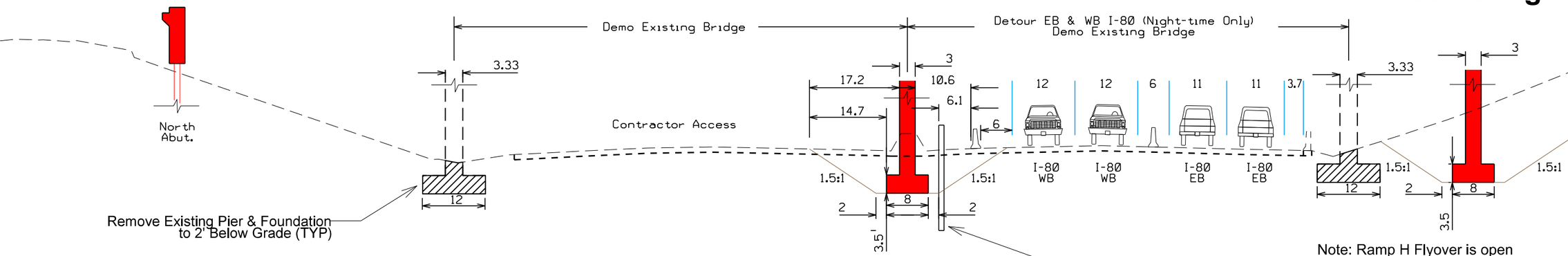

Stage 6A - FY 2024
Demo & Pier Work

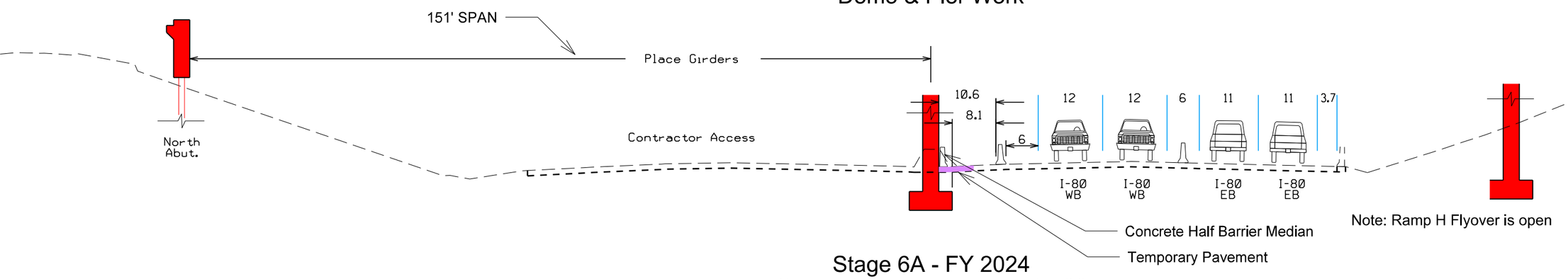

Stage 6A - FY 2024
Girder Placement over WB I-80

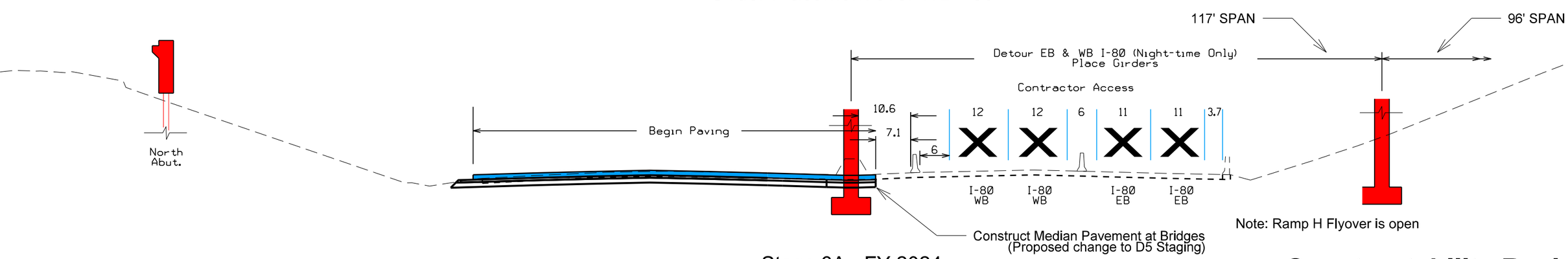

Stage 6A - FY 2024
Girder Placement over EB I-80

20 Scale

Constructability Review

I-380 over I-80 Bridges

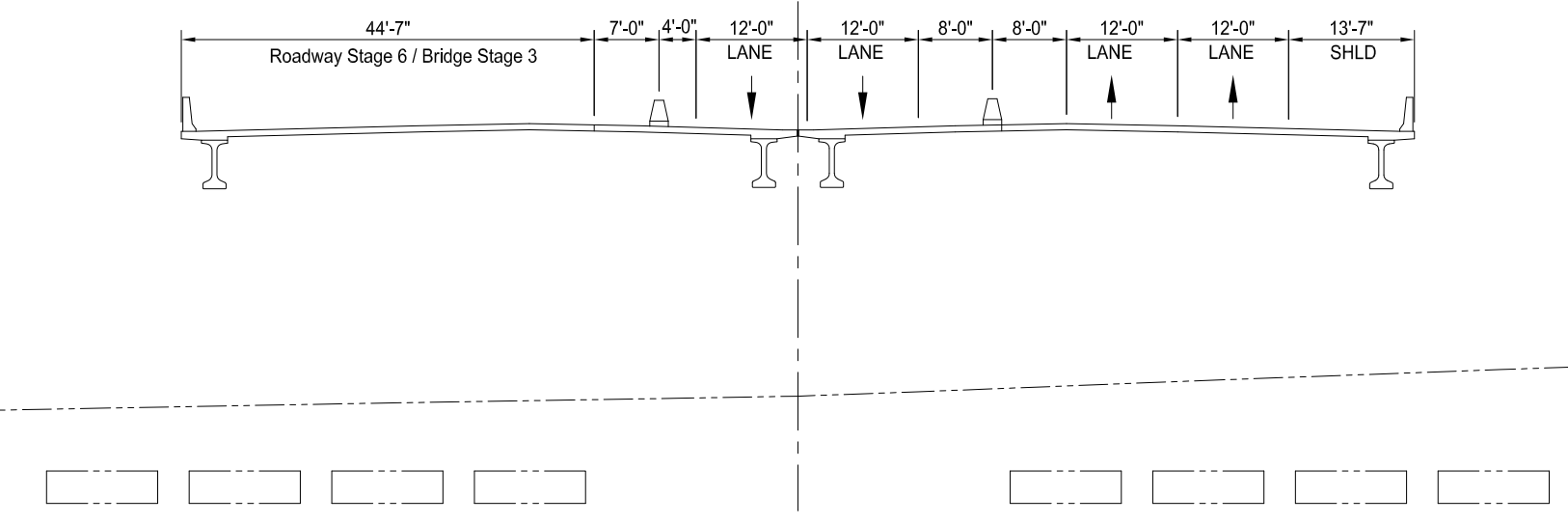

ROADWAY STAGE 6 (2024)

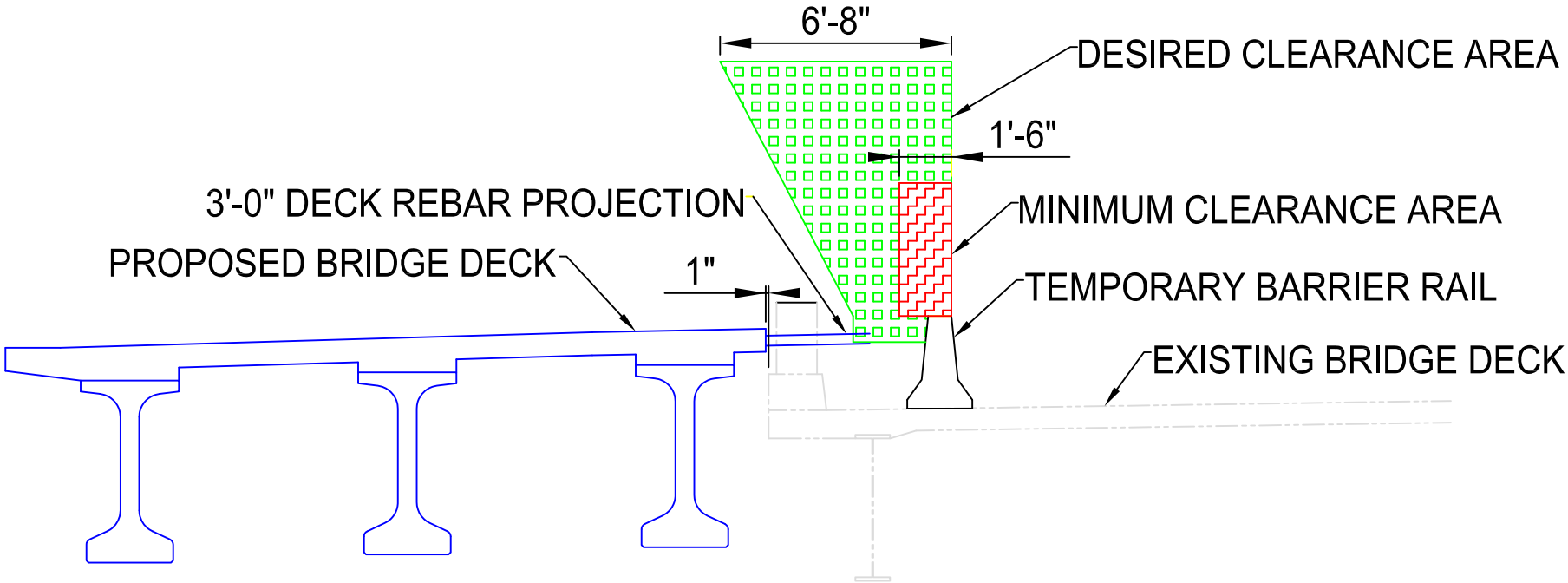
6'-8"
DESIRED CLEARANCE AREA
1'-6"
3'-0" DECK REBAR PROJECTION
MINIMUM CLEARANCE AREA
PROPOSED BRIDGE DECK
1"
TEMPORARY BARRIER RAIL
EXISTING BRIDGE DECK

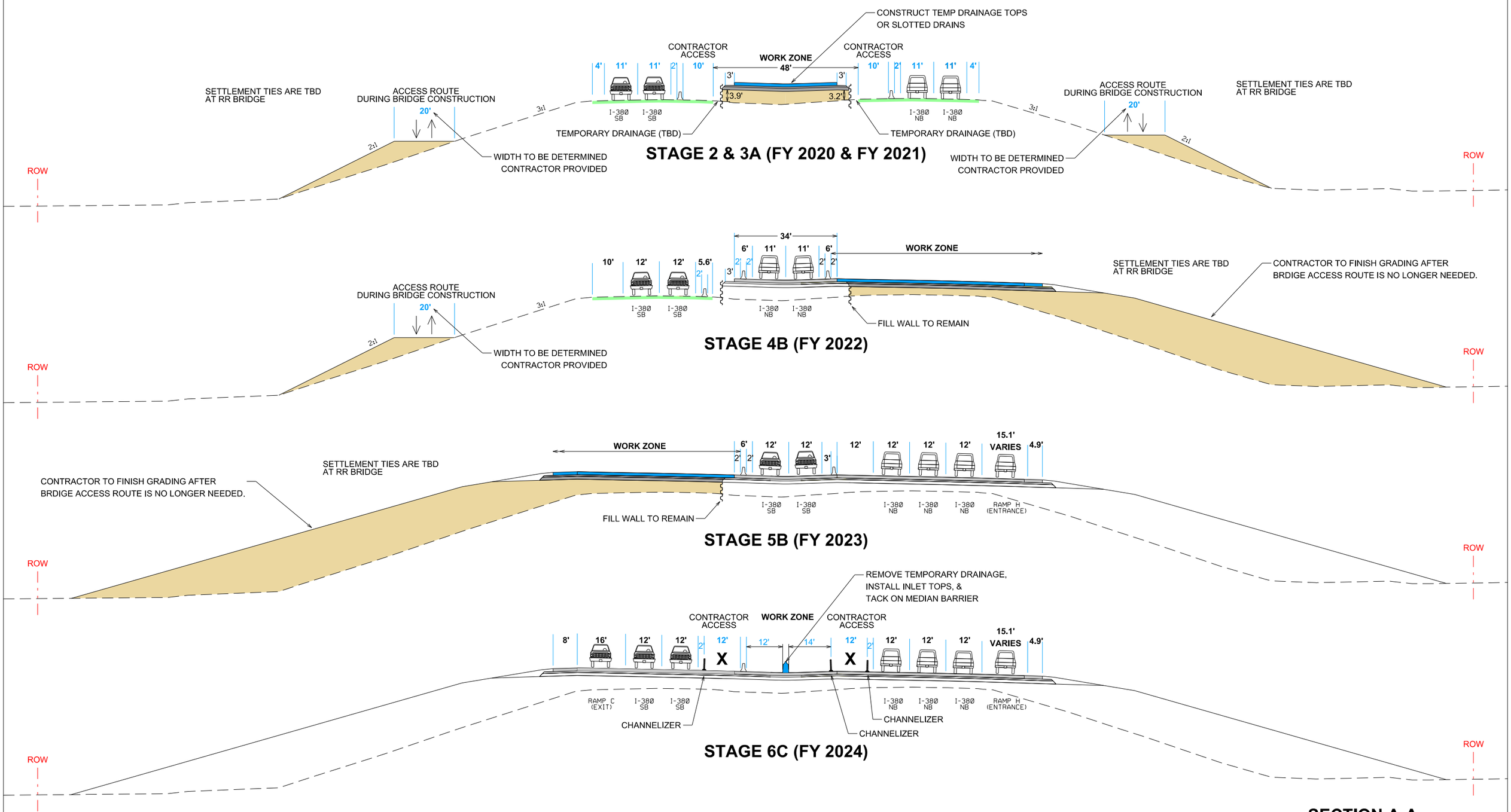

30 SCALE

SECTION A-A
STA. 1203+00
5 OF 15

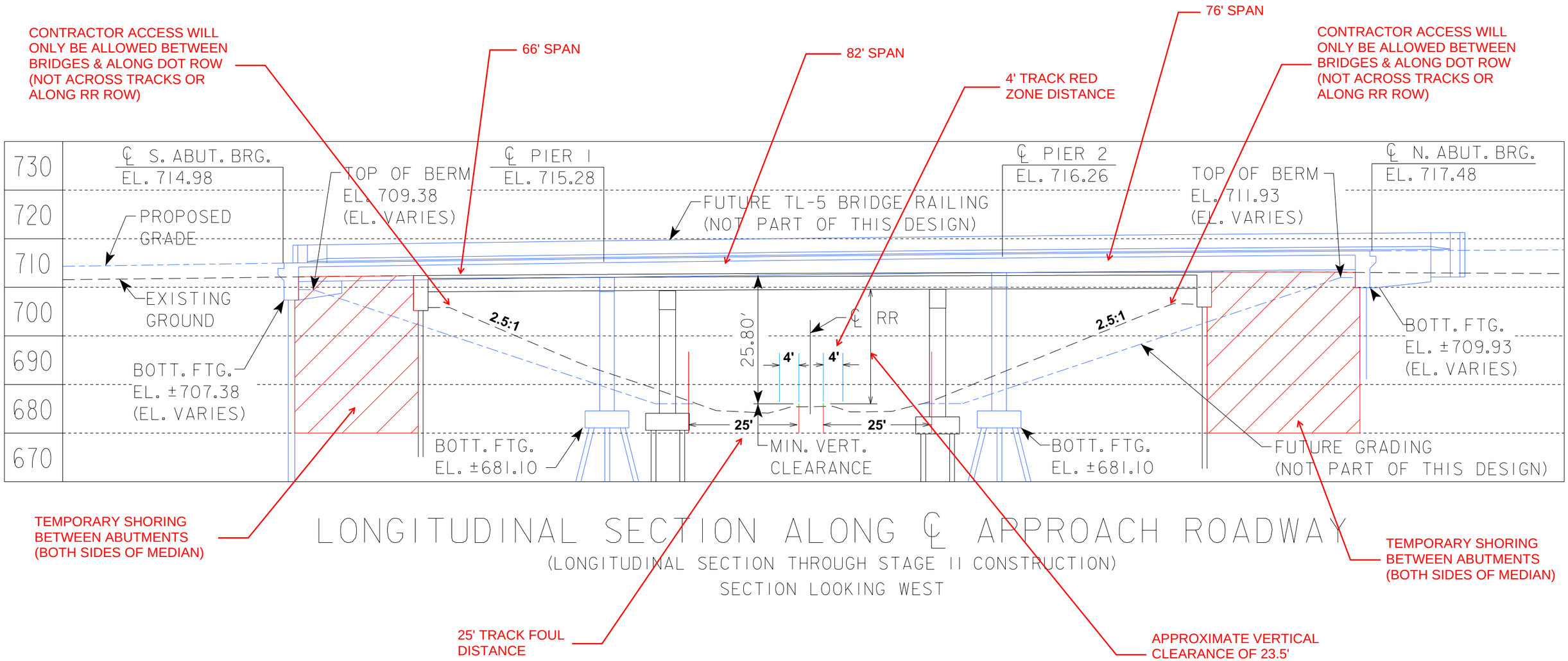

LONGITUDINAL SECTION ALONG ℄ APPROACH ROADWAY

(LONGITUDINAL SECTION THROUGH STAGE II CONSTRUCTION)

SECTION LOOKING WEST

20 SCALE

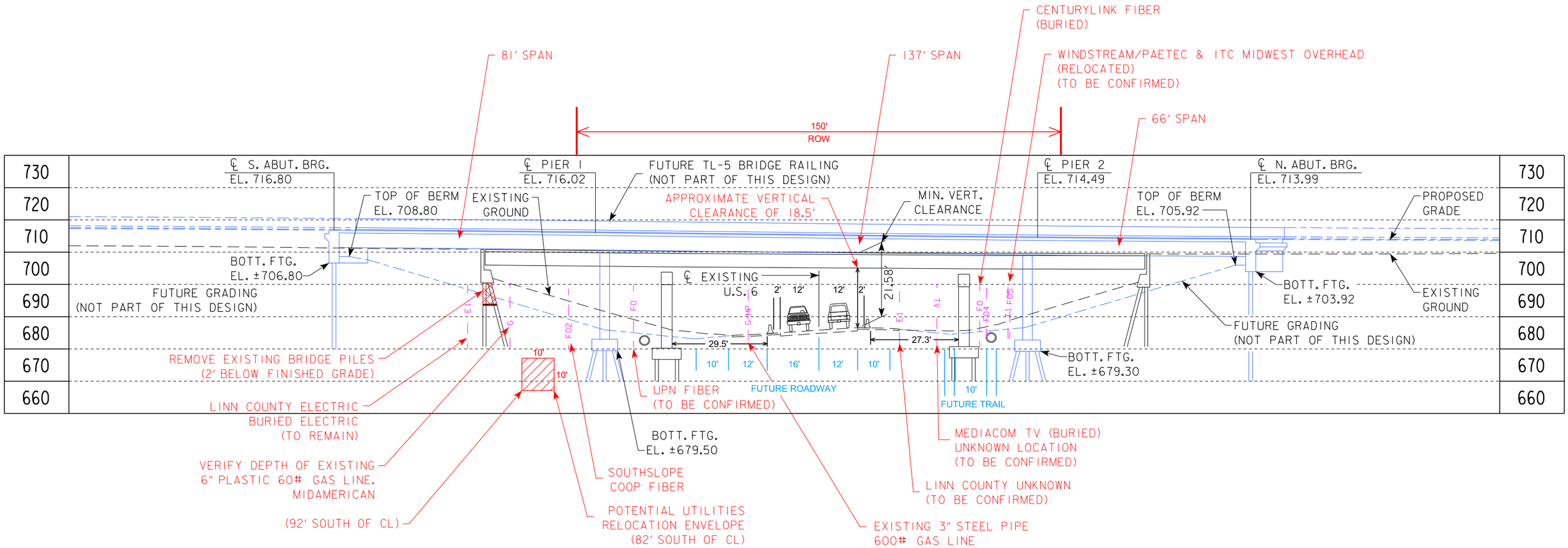

NOTE: TOP OF BRIDGE DECK AT CENTERLINE ROADWAY IS +0.24' ABOVE THE PROFILE GRADE TO ACCOUNT FOR CROSS SLOPE.

I-380 OVER US-6
LONGITUDINAL SECTION ALONG ℄ APPROACH ROADWAY

(LONGITUDINAL SECTION THROUGH FUTURE STAGE II CONSTRUCTION)

SECTION LOOKING WEST

Location 2 - 12184+98.38
Ramp H over Existing Ramp A Detour

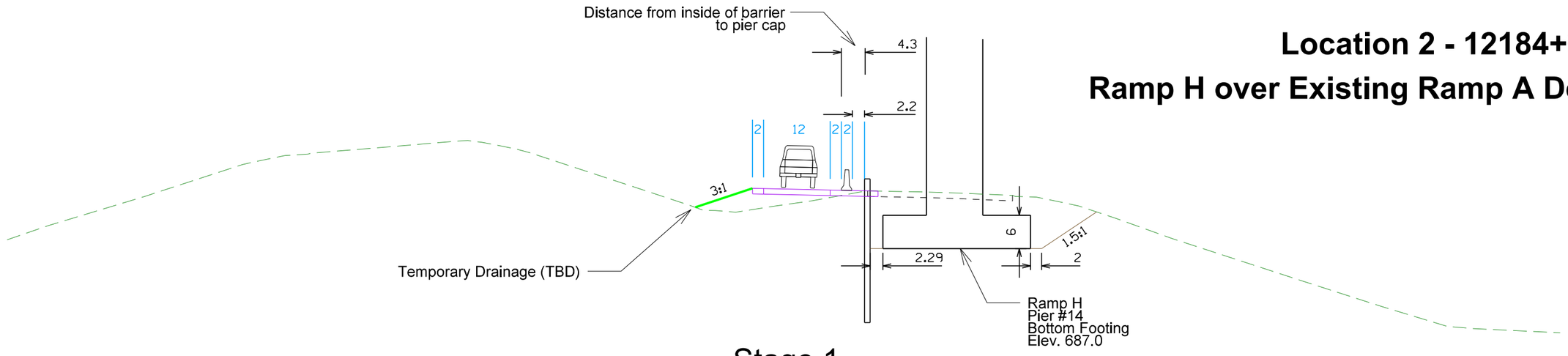

Stage 1

Alternative 2 - Acceptable Shoulder

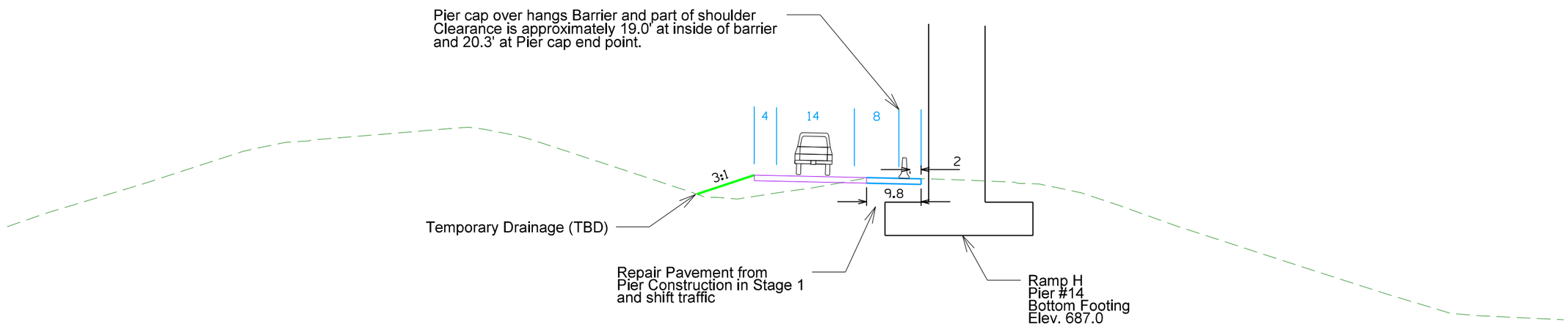

Stage 2

Alternative 3 - Shift from Acceptable Shoulder

(Removed in Stage 4D)

20 Scale

Pier Constructability Review

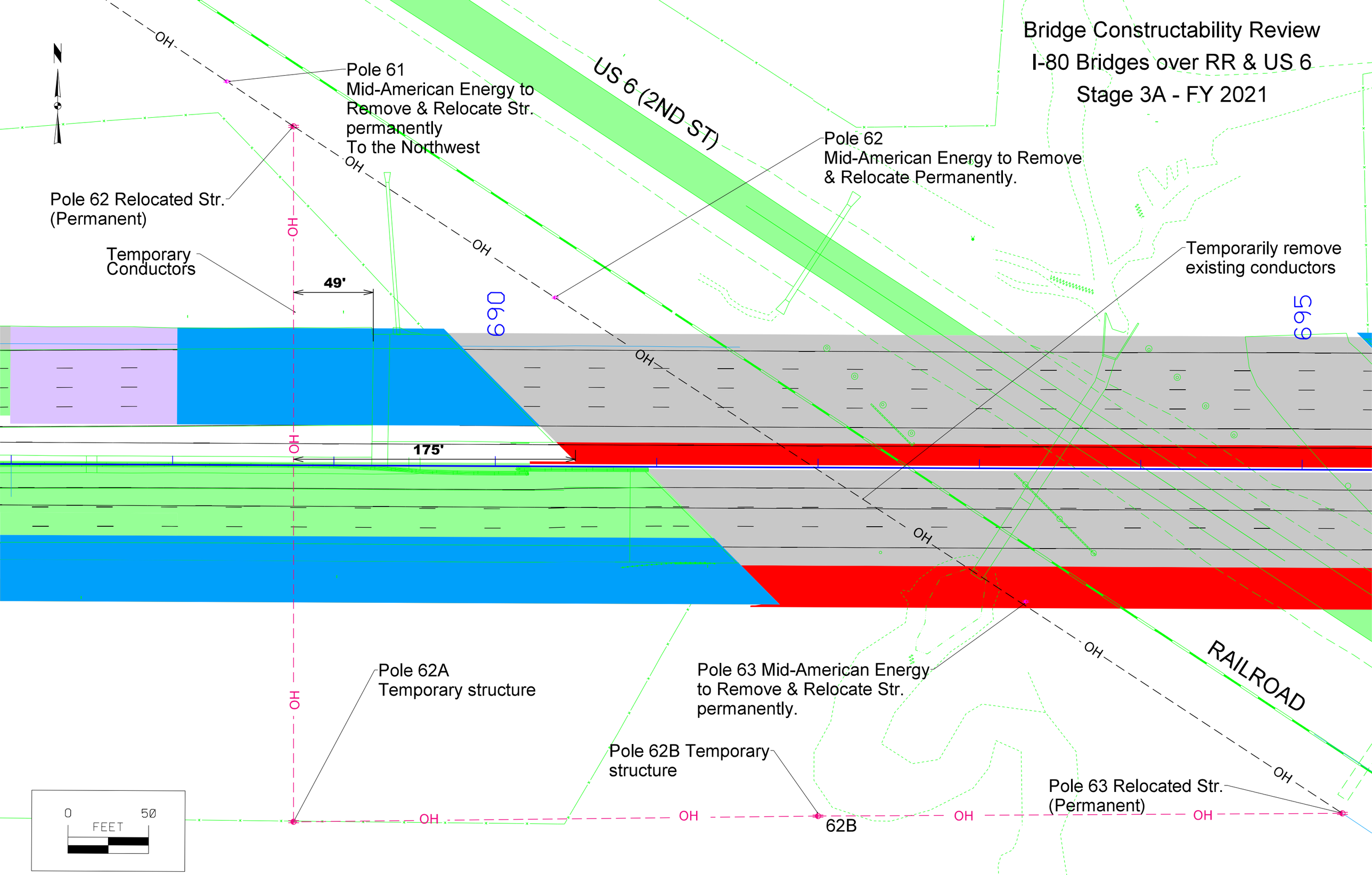
Bridge Constructability Review
I-80 Bridges over RR & US 6
Stage 3A - FY 2021
US 6 (2ND ST)
Pole 61
Mid-American Energy to
Remove & Relocate Str.
permanently
To the Northwest
Pole 62
Mid-American Energy to Remove
& Relocate Permanently.
Pole 62 Relocated Str.
(Permanent)
Temporary
Conductors
Temporarily remove
existing conductors
49'
175'
690
695
OH
Pole 62A
Temporary structure
Pole 63 Mid-American Energy
to Remove & Relocate Str.
permanently.
Pole 62B Temporary
structure
62B
Pole 63 Relocated Str.
(Permanent)
RAILROAD
0
50
FEET

WALLS / BANK ARMORING

- Permanent Walls
  - View Block Wall
  - Temporary Fill Walls
  - Ramp E MSE Wall
- Temporary Cut Walls
- Bank Stabilization

GEOTECH

- Settlement Times Vary
  - 1 Month – 2-ft surcharge Ramp H, D
  - 2 Months – 4-ft surcharge Ramp B Pier 7A
  - 6 Months – 4-ft surcharge Ramp B/H
  - Other areas TBD
- Stone Slope Protection
  - Clear Creek

TRAIL / RAILROAD / PARK

- Iowa Interstate Railroad
- Proposed Trails
  - Along Clear Creek
  - Along US 6 (north side)
- Park Areas
  - Coralville Parks
  - Tiffin Parks

ITS / LIGHTING / FIBER

- Staged Lighting with each package
- ITS
  - Early Package
  - Helps monitor traffic during construction
- Fiber
  - ICN Relocation
- Utility Crossings
  - Temporary sheet pile locations

SIGNALS

- Possible Temporary Signals
  - Detours on Local Streets
- Adaptive Traffic Signal System

GETTING YOU THERE

I-80/I-380 SYSTEMS INTERCHANGE

AGC MEETING – FEB 14, 2018