Memorandum

U.S. Department of Transportation
Federal Highway Administration

Subject: INFORMATION: Crash Tested Work Zone Traffic Control Devices

Date: August 28, 1998

From: Director, Office of Engineering

Reply to Attn. of: HNG-14

To: Regional Administrators
Division Administrators
Federal Lands Highway Program Administrator

I. Introduction

The July 25, 1997, memorandum from the Director, Office of Engineering, Information: "Identifying Acceptable Highway Safety Features," established four categories for work zone traffic control devices. These categories differentiate between the various types of work zone hardware required to be crashworthy and indicate the need to qualify these features under testing and acceptance guidelines of the National Cooperative Highway Research Program (NCHRP) Report 350. The requirement to use NCHRP Report 350 accepted hardware is for projects on the National Highway System (NHS) advertised after October 1, 1998, or later depending on the type of device. Crashworthy hardware is also to be used by maintenance, force account, and utility forces working on the NHS routes.

On August 28 the FHWA concurred with an agreement proposed by a task force of the AASHTO to delay implementation of certain safety hardware, including many work zone traffic control devices and barriers. The revised compliance dates for purchase of new work zone devices that meet NCHRP Report 350 test and evaluation criteria are reflected herein. Briefly, these dates are:

Category I devices, October 1, 1998;
Category II devices, October 1, 2000;
Category III devices (attenuators), October 1, 1998;
Category III devices (temporary barriers), New units must have tensile and moment resistance after October 1, 2000. New units must meet NCHRP Report 350 criteria after October 1, 2002.

The agreement also stated that, except for certain temporary concrete barriers which are discussed in Section III below, "agencies can phase out existing devices as they complete their normal service life." In light of the durability of some work zone devices, States may, if they wish, prohibit after some future date the use of devices that have failed when crash tested or have not been tested or evaluated for crashworthiness even before the end of their normal service life. Additional guidance on implementing crashworthy roadside safety hardware and work zone traffic control devices is contained in my memorandum dated August 28, on the subject "National Cooperative Highway Research Program Report 350 Hardware Compliance Dates."

II. Purpose and Organization

This memorandum is an FHWA acceptance letter and includes lists of the work zone traffic control devices that have been determined to be crashworthy and acceptable for use on the NHS. Attachment A contains these lists, along with more information and details for some of the listed devices. Some of the category 1 and 2 devices listed as acceptable were tested in the past using test conditions that, in some aspects, were different from those required by NCHRP Report 350. However, the test results were such that we are confident in accepting these category 1 or 2 devices at NCHRP Report 350 Test Level 3 (TL-3).

Section III, below, reviews the basis for determining the acceptability of work zone hardware for use on the NHS according to the four categories detailed in our July 25, 1997, memorandum. Note that the crash test summaries in Attachment A include information on some devices that have been tested and found unacceptable.

Attachment B contains a series of questions and answers developed in response to inquiries from industry and our field offices. This information was developed as guidance by the Offices of Highway Safety and Engineering, and may be found on the Internet at http://www.ohs.fhwa.dot.gov/design.

Please note that the term "vendor" is used in this memorandum to represent any person or organization (commercial or governmental) that designs, manufactures, sells, or deploys highway safety hardware or traffic control devices. The term "State" is used to represent any transportation agency, utility company, or other agency that specifies temporary traffic control devices for use by their contractors or by their own forces.

III. Crashworthy Traffic Control Devices

Category 1 Devices

Low-mass, single-piece traffic cones, tubular markers, single-piece drums, and delineators are category 1 devices and are, by definition, considered crashworthy devices meeting NCHRP Report 350 TL-3 criteria. At this time, no auxiliary lights or signs may be attached to devices certified under category 1 devices. As little, if any, additional crash testing is required the compliance date for implementing crashworthy category 1 devices remains October 1, 1998.

Through formal and informal crash testing, and because of years of experience, these low-mass devices have shown that they will not cause an appreciable change in the speed of an impacting vehicle and it is unlikely that any part of these devices will intrude into the passenger compartment of a striking vehicle. See Attachment A, Table I.1, for a list of these devices, including maximum mass and maximum height of the devices that were satisfactorily crash tested. That information may assist vendors in making an analysis of their specific devices. For details of specific tests that were conducted on some of these devices, see Attachment A, Table I.2. Please note that the data in Table I.2 are for information purposes only. Not all information for each test was available from the reports on file and some of the entries are incomplete.

While the States may place additional conditions on features to be used in highway projects, the FHWA suggests that States accept category 1 devices based on the self-certification by the vendor. It is the responsibility of the vendor of the device to determine if, and to certify that, their product is crashworthy--that it will meet the evaluation criteria of the NCHRP Report 350. This certification may be a one-page affidavit signed by the vendor with documentation supporting the certification (crash tests and/or engineering analysis) kept on file by the certifying organization. This procedure was developed to reduce the regulatory burden on the highway community in light of the great number of obviously similar crashworthy devices being used today. If subsequent analysis or crash testing shows that a device is not crashworthy as certified by the vendor, the device may be prohibited from use on the NHS.

Category 2 Devices

Like category 1 devices, certain other low mass traffic control devices qualify for a reduced level of crash testing and/or reporting under NCHRP Report 350. Individual crash testing will be required and FHWA letters of acceptance may be requested. Because of the great variety of styles and sizes of devices and their attachments within category 2 the implementation date has been delayed until October 1, 2000, to continue crash testing and to permit analysis of the various devices.

Category 2 hardware that has been crash tested and that has received an acceptance letter from the FHWA include various plastic barricades, vertical panel assemblies, portable sign supports, and Type III barricades. The FHWA acceptance letters and the specific devices that are considered acceptable are listed in Attachment A, Table II.1. Other acceptable category 2 devices that have been tested under State contracts are also listed in that table. Drawings of most of the devices that passed the testing under these State contracts are illustrated in Attachment A in Figures II.1 through II.20.

Although the intent of this memorandum is to list acceptable devices, we believe it is important to note that failures of certain devices that are in common use have occurred during crash testing. These tests are listed in Attachment A, Table II.2 and are highlighted with grey shading. Information in the reports from these tests should provide useful starting points for the design of crashworthy replacements for these failing devices.

It is likely many other devices have been successfully tested over the years and have been placed in service. However, we only have details on the devices included in this memorandum. The American Traffic Safety Services Association (ATSSA) has compiled additional crash test information and is preparing a request for acceptance of various devices produced by its member companies. Manufacturers are welcome to submit reports of crash testing conducted on their devices to the FHWA, Office of Engineering for our review. Vendors should note that in order to accelerate the acceptance of crashworthy work zone traffic control devices and reduce the costs of full scale crash testing, the FHWA will review the results of informal crash testing for category 2 work zone traffic control devices that meet the reduced instrumentation requirements of Section 3.2.3.2 of NCHRP Report 350. Although this section specifies a maximum mass of 45 kg, FHWA will consider devices on a case-by-case basis if it is evident that they will not cause a significant velocity change (generally this would encompass stand-alone devices up to a mass of 100 kg). See the guidance contained in our memorandum of July 25, 1997, referenced earlier for additional information. (Lights, signs, and other auxiliary devices are permitted only if they were included on tested drum, barricade, etc., and the results were acceptable .)

Category 3 Devices

Category 3 devices are subject to the full testing and reporting requirements of NCHRP Report 350. Individual acceptance letters for NCHRP Report 230 and NCHRP Report 350 crashworthy truck mounted attenuators (TMAs) and traffic barriers--impact attenuators (crash cushions), barrier terminals, and longitudinal barriers (temporary and/or permanent)--are listed in Attachment A, Table III.1.A. They are listed by type of hardware, then in alphabetical order according to manufacturer. Each item is listed with the FHWA acceptance letter number and date of that letter, the NCHRP Report 350 test level to which it was tested (or "NCHRP Report 230" if testing to the NCHRP Report 350 has not been done), and the name of the device.

New work zone crash cushions (including TMAs) purchased after October 1, 1998, must meet NCHRP Report 350 guidelines. The States can phase out existing barriers as they complete their normal service life, except that barriers with joints that fail to transfer tension and moment from one segment to another will not be acceptable after October 1, 2000, unless demonstrated to be crashworthy. The five "Tested and Operational Connections" shown in Chapter 9 of the AASHTO Roadside Design Guide will meet this requirement. New precast temporary concrete barriers purchased after October 1, 2002, must meet the NCHRP Report 350 criteria.

Because various sizes of breakaway sign supports are used in work zones, the entire list of FHWA breakaway sign support acceptance letters is included as Attachment A, Table III.1.B of this memorandum. The adoption of the NCHRP Report 350 did not affect the status of breakaway supports that had been tested under the AASHTO Standard Specifications for Structural Supports for Highway Signs, Luminaires and Traffic Signals.

Category 4 Devices

The last category, which is actually a subset of category 3, includes portable, usually trailer-mounted, devices such as area lighting supports, flashing arrow panels, temporary traffic signals, and changeable message signs used in or adjacent to the traveled way. The AASHTO/FHWA agreement states that time is needed to conceive and evaluate alternative measures for making these devices crashworthy, to examine the use and crash histories of existing devices, and to review and, if needed, develop safer, cost-effective strategies for the placement or replacement of these devices that will provide motorists with needed information for driving in work zones. An announcement of an implementation date is anticipated by October 1, 2000.

IV. Disclaimers

Neither this memorandum nor any other FHWA correspondence recognizing the crashworthiness of work zone hardware implies conformity with the Manual on Uniform Traffic Control Devices (MUTCD). A vendor of a new device should check to see that it conforms to the MUTCD before proceeding with a full-scale crash testing program.

The crashworthy roadside safety hardware and work zone traffic control devices covered by this memorandum are acceptable for use in work zones or other locations as appropriate on the NHS, within the range of conditions tested, if acceptable to the States. Our acceptance is limited to the crashworthiness characteristics of the devices and does not cover their other structural requirements. Vendors are expected to supply potential users with evidence of crashworthiness (a certification of crashworthiness for category 1 devices) and sufficient information on design and installation requirements to ensure proper performance for all safety hardware. We anticipate that the States will require certification from the vendors that the hardware furnished has essentially the same chemistry, mechanical properties, and geometry as that used in the crash testing, or that it is substantially similar to a tested device and that it will meet the NCHRP Report 350 performance requirements as modified by the FHWA

Many of the devices covered by this memorandum are patented and therefore "proprietary." Temporary proprietary work zone hardware is usually selected by a contractor to meet general requirements for the management of traffic through work zones. As such, the hardware can be assumed to be exempt from the requirements for the use of patented or proprietary products covered in 23 CFR 635.411. However, if such products are specified by name by a highway agency for use on a Federal-aid highway project, except non-NHS projects, the requirements of 23 CFR 635.411 must be met.

Henry H. Rentz

Henry H. Rentz

3 Attachments

ATTACHMENTS TO FHWA-HNG-14 MEMORANDUM **INFORMATION: CRASH TESTED WORK ZONE TRAFFIC CONTROL DEVICES** DATED

August 28, 1998

Attachment A - LISTS OF ACCEPTABLE WORK ZONE HARDWARE

TABLE I.1	Acceptable Crashworthy Category 1 Hardware	A1
TABLE I.2	Background Information for Category 1 Devices	A3
TABLE II.1	Acceptable Crashworthy Category 2 Hardware	A5
TABLE II.2	Background Information for Category 2 Devices	A9
FIG. II.1	"Figure 21" Spring Mounted Sign Support	A13
FIG. II.2	"Figure 29" Portable Sign Support	A14
FIG. II.3	"Figure 33" Sign Trailer	A15
FIG. II.4	"Figure 37" Skid Mounted Sign Support	A16
FIG. II.5	"Figure 41" & "Figure 45" Perforated Steel Tube Type III	A17-19
FIG. II.6	"Figure 42" Perforated Steel Tube Type III	A20
FIG. II.7	"Figure 57" Tex-Mex Type III	A21
FIG. II.8	"Figure 61" Hollow-Core Plastic Type III	A22
Fig. II.9	"Figure 1" Type III Hollow-Core Plastic	A23
Fig. II.10	"Figure 2" Type III Steel Perforated Tubing	A24
Fig. II.11	"Figure 3" Type III Steel Perforated Tubing	A25
Fig. II.12	"Figure 4" HwyCom Fiberglass Type III	A26
Fig. II.13	"Figure 5" Price Fiberglass Type III	A27
Fig. II.14	"Figure 7" Spring-Loaded Portable Sign Support	A28
Fig. II.15	"Figure 8" Ground-mounted Type III	A29
Fig. II.16	"Figure 11" Vertical Panel Assembly	A30
Fig. II.17	"Figure 10" Skid-mounted Sign Support	A31
Fig. II.18	"Air Spill Barricade" vertical Panel	A32
Fig. 11.19	"A-8" Nevada PVC Type III	A33
Fig. II.20	"A-9" Nevada PVC Type III	A34
TABLE III.1.A	List of Acceptable Crashworthy Category 3 Hardware (Truck Mounted Attenuators (TMAs) and Traffic Barriers)	A35-37
TABLE III.1.B	List of Acceptable Crashworthy Category 3 Hardware (Breakaway Sign Supports)	A38-42

Attachment B - WORK ZONE QUESTIONS AND ANSWERS

1.	General	B1
2.	Channelizing Devices	B4
3.	Signs	B9
4.	Barriers	B9
5.	Crash Cushions and Truck Mounted Attenuators	B11
6.	Other; Contact Information	B13

Attachment A, TABLE I.1
ACCEPTABLE CRASHWORTHY CATEGORY 1 HARDWARE

Device[1]	Composition	Maximum Mass[2]	Maximum Height
Single Piece Traffic Cones	Rubber	9 kg	920 mm
	Plastic	9 kg	1220 mm
Tubular Markers[3]	Rubber	6 kg	920 mm
	Plastic	6 kg	920 mm
Single piece Drums[4]	Hi Density Plastic	35 kg	920 mm
	Lo Density Plastic	35 kg	920 mm
Delineators[5]	Plastic, Fiberglass	N / A[6]	122 mm

1. No lights, signs, flags, or other auxiliary devices are allowed on Category 1 devices. Some of these combinations may be found acceptable as Category 2 devices.
2. Additional ballast at the base consisting of a rubber truck tire sidewall or other similar, low - profile weights are acceptable. The mass shown here is not a limiting value, rather it was the maximum mass of devices that have been tested in the past.
3. Tubular markers may be affixed to the pavement or curb, or mounted upon a low - profile, base with a flexible connection.
4. In this context, "single piece" refers to the construction of the body of the drum exclusive of a separate base, if any.
5. Delineators are typically driven directly into the soil. Reflective sheeting or a reflective button are allowed on Category 1 devices.
6. Delineators have rarely been subjected to full scale crash testing because in many cases they are shorter and lighter versions of tested and acceptable steel sign supports. For use in work zones, currently available plastic and fiberglass delineator posts are light weight and well within the scope of devices considered crashworthy.

Attachment A, TABLE I.2
CRASH TEST INFORMATION FOR CATEGORY 1 DEVICES

CATEGORY 1 WORK ZONE TRAFFIC CONTROL DEVICES (Less than 45 kg, Reduced test procedures of NCHRP 350 are appropriate.)

DEVICE	MANUFACTURER	SIZE (mm)	MATERIAL	MASS (kg)	LIGHTS, ETC?	TEST	SPEED (km/h)	VEHICLE (kg)	DEBRIS* (m)	VEHICLE DAMAGE	ACCEPTED
CONES	Services & Mat'ls Co	914	?	5.5	Yes, Loose	NY - 65	97	2041	Insig.	Insig.	Cat. 1 W/O Light
	" "					NY -114	48	2041	50		Cat. 1
	Generic	914	?	4.8	No	NY-67	97	2041	Insig.	None	Cat. 1
	"					NY-113	48	2041	Insig.	None	Cat. 1
	Road Safety Devices		?	8.0	8# sandbag	NY-71	97	816	70	None	Cat. 1
	"			8.0	Ballast ?	NY-72	48	816	Insig.	None	Cat. 1

36" cones tested weighed 18# or less. As of June 1, 1998, lights are not acceptable for Category 1 devices.

DEVICE	MANUFACTURER	SIZE (mm)	MATERIAL	MASS (kg)	LIGHTS, ETC?	TEST	SPEED (km/h)	VEHICLE (kg)	DEBRIS* (m)	VEHICLE DAMAGE	ACCEPTED
TUBULAR MARKERS											
TP-42	Service&Materials	?	?	6.1	No	NY-66	97	2041	26	None	Cat. 1
" "	" "	?	?	" "	" "	NY-112	48	2041	15	None	Cat. 1
" "	" "	?	?	6.1	(3.6 kg ballast)	NY-73	97	816	17	None	Cat. 1
" "	" "	?	?	" "	" "	NY-74	48	816	18	None	Cat. 1

* This column is an indication of what threat may be posed to workers when the device is struck by a vehicle in the work zone.

Attachment A, TABLE I.2
CRASH TEST INFORMATION FOR CATEGORY 1 DEVICES (Continued)

DEVICE	MANUFACTURER	SIZE	MATERIAL	MASS	LIGHTS, ETC?	TEST	IMPACT SPEED	TEST VEHICLE	DEBRIS	VEHICLE DAMAGE	ACCEPTED
PLASTIC DRUMS. Drum Body and Base are separate components. Note that Lights, Signs, or other features attached to the top of the drum are not acceptable for Category 1 devices at this time.											
Drum Body	Various		HDPE	5 kg	No Accessories **				****		Cat. 1
			LDPE	5 kg	No Accessories **				****		Cat. 1
Drum Base	Various		HDPE	35 kg	Incl. Ballast***						Cat. 1
			LDPE	35 kg	Incl. Ballast***						Cat. 1

** No lights, signs, ballast, nor any other features may be attached to the top or sides of the drum body under this category. Only closed-top drums will be permitted in this category.
*** Drum Base Ballast must be sand or rubber tire sidewalls. No ballasting of drum bodies will be permitted
**** Due to the variety of available drums, the FHWA will not discriminate between them on the question of debris. Individual manufacturers may be asked to show that their drums do not cause hazardous debris to workers or adjacent traffic.

FEDERAL HIGHWAY ADMINISTRATION
This table is an updated version of the one included in the FHWA Memorandum "Crash Tested Work Zone Traffic Control Devices"
Dated August 28, 1998
This list was last updated on May 23, 2000

ACCEPTABLE CRASHWORTHY CATEGORY 2 HARDWARE FOR WORK ZONES

Acceptance Letter # And Date	Manufacturer, Developer, Agency, etc.	Device(s)
FHWA wz-1 6-19-97	WLI Industries	SafetyCade Vertical, or SafetyCade Barricade Type II, Plastic, with Warning Light AcceptedTL-3
FHWA wz-2 l-28-98	Impact Recovery Systems, Inc.	Vertical Panel w/driveable base, Portable Single and Double Vertical Panels. Fixed Single-and Double Vertical Panels Fixed Chevron sign Assemblies, Accepted-
FHWA WZ-2A 5-16-98		Addition of Opposing Traffic Lane Divider, Portable Chevron, and Vertical Panels, with lights.
FHWA WZ-2B 3-3-2000		Specify range of heights for vertical panels 945mm, 1220mm, and 1525mm as acceptable
FHWA WZ-3	Various	FHWA Memo of 8-28-98. It finds the following tested devices acceptable for use on the NHS. See Attachment B, Table 2 for test data, and the drawings after the tables for illustrations of the crashworthy devices.
	TTI for Texas D.O.T.	TTI tested numerous work zone traffic control devices. All the devices listed here were successfully tested in these two crash test programs and met TL-3 criteria. The attached drawings illustrate the tested hardware but do not necessarily provide enough information to fabricate the device. The crash testing is fully documented in the two reports which should be consulted for additional details of the hardware.
	(TTI Report Note 1)'	1) Spring Mounted Sian Support with Plastic/Fabric Sign (see Figure 11.1, "Figure 21")
		2) Portable Sign Support with Plastic/Fabric Sign, with flags added on top (see Figure 11.2, "Figure 29")
		3)D-4 Sign Trailer with Wooden sign Panel (see Figure 11.3, "Figure 33")
		4) Skid Mounted Sign Support with Plywood Sign Panel (see Figure 11.4, "Figure 37")
		5) Perforated Steel Tube Type III Barricade with Plastic Panels (see Figure 11.5 "Figure 41" & "Figure 45")
		6) Perforated Steel Tube Type III Barricade with 1x8 Wood Panels (see Figure 11.6 "Figure 42")
		7) Schematic of Plastic Type III Barricade by Tex-Mex Barricade (see Figure II.7 "Figure 57") this hardware may no longer be in production.7
		8) Hollow Core Recycled Plastic Type III Barricade[4] (see Figure II.8 "Figure 61")
	TTI Report, Note 2	1) Type III Hollow Core Plastic Barricade (see Figure II.9 "Figure 1.") (Vertical braces were added to support the panels prior to putting them in place on the barricade.)
		2) Type III Perforated Tubing Barricade (3.7 m) (see Figure 11.10 "Figure 2.") (Vertical braces added, as noted above. Base connection detail also modified. Acceptable with 1x8 wood or hollow core plastic rails.)

		3) Type III perforated Tubing Barricade (1.2 m (see Figure II.11 "Figure 3.") (Vertical braces added, a noted above. Base connection detail also modified. Acceptable with 1x8 wood or hollow core plastic rails.)
		4) HwyCom Fiberglass Type III Barricade with plastic panels (see Figure II.12 "Figure 4.") (Round 76 mm diameter fiberglass pipes were used as the supports.)
		5) Price Fiberglass Type III Barricade (see Figure II.13 "Figure 5.") (89 mm x-32 mm x 6.4 mm fiberglass u-channel supports were used.)
		6)Spring-loaded Portable Sign Support (see Figure II.14 "Figure 7") (Tested with mounting height of 610-mm.)
		7) Ground-mounted Type III barricade (see Figure II.15 "Figure 8.") (Steel supports ground mounted in Poz-Loc sockets. Also acceptable with fiberglass supports in a "Universal" anchor, and with perf. square steel tubes in anchors.)
		8) Vertical Panel Assembly (three shown in Figure II.16 "Figure 11.") (Plywood panels mounted on wood, steel angle, and plastic c-channel posts.)
		9) Skid-mounted Sign Support. (See Figure 11.17 "Figure 10.") (No modifications, but was tested end-on.)
wz-3 Continued	Flasher Handling	Air Spill Barricade. Flexible vertical panel fixed to a 44.5-mm wide, 1170-mm tall fiberglass support. support is fixed to a low-profile rubber base.(See Figure 11.18)
	Services & Materials Co.	VB-RFL. Vertical panel acceptable as a Category 2 device without lights. Tested with lights, but no details of the light battery are available. (More information is needed before this vertical panel can be found acceptable with lights.)
	Nevada DOT	Breakaway Type III Barricade (PVC Pipe, cable or rope through all pipes). See FHWA Implementation Package IP **75-6 "Breakaway Barricades".** See Figures II.19 and 11.20 (Drawings A-8 & A-9) of the final designs. WARNING: The New Jersey PVC Barricade was tested in **October 1999 and failed when a horizontal element penetrated the windshield in the 90 degree test.**
	Wyoming DOT	Wood Type III Barricade (150-mm square wood horizontals and uprights, 3000-mm wide panels. See AASHTO Roadside Design Guide Figure 9.18. Mass of tested unit was 150 kg, not 725 as shown.)
wz-4 5-29-98	Woudenberg Enterprises	MSi Durastem Vertical Panel, with lightweight warning light attached.
wz-5 7-23-98	Flasher Handling	Air Spill Barricade vertical panel, Opposing Traffic Lane Divider, Breakaway perforated square steel tube frame barricade
WZ-6 11-23-98 (Inadvertently issued as wz-5)	Bent Manufacturing	Type II plywood or plastic panel barricade*; Universal Plastic panel barricade*; T-Top vertical panel*; Superdome plastic drum*; Type III Barricade*; Masterflex Post (a vertical panel); T-Top Delineator*; [* these devices may have a lightweight warning light attached]
wz-7 112-14-98	Eastern Metal	X-550 and C-102 Portable Sign Stands with plastic/fabric signs.
wz-8 2-5-99	Off the Wall	Multi-Barrier MB2 hollow plastic barricade

wz-9 1-12-99	Safety Quest	Roadguard channelizer by Traffic Safety Devices, Inc.
wz-10	Reserved	
wz-11 2-16-99	Recycled Plastic Products	Hollow Core Recycled Plastic Barricades
wz-12 5-28-99	Flasher Handling	Air Flow Roll Up Sign Unit, Bantam II portable sign, Polypropylene sign Panels on Drums
wz-13 6-3-99	Eastern Metal/ USA Sign	Melba Barricade: Large Vertical Panel Assemblies, Type I Barricades, Type II Barricades Eastern Metal: Super Flex Compact Sign Stands, Interstate Sign Stands, Compact Non-Flexing Aluminum Sign Stands
WZ-14 5-28-99	Plasticade Products	Fibercade, Plasticade, and Plasticade Sign Stand
wz-15 6-30-99	WLI Industries	Safety Cade Extended vertical panel with lightweight warning light
WZ-16 6-4-99	Bent Manufacturing	ULTRA vertical panel with lightweight warning light
WZ-17 7-19-99	Dicke Tool Co.	Type I plastic Barricades with NightFlasher warning light 1500 Series Drum with NightFlasher warning light 12 models of Portable Sign Stands
WZ-18 7-20-99	PIBH	Pennsylvania Institute for the Blind and Handicapped Portable Sign Stand with Roll Up sign
wz-19 7-26-99	Montana DoT	Trailer-mounted portable sign stand with aluminum sign
WZ-20 10-28-99	MD1	Compact Portable Sign Stands with Roll Up Signs
wz-21 9-26-99	Korman Signs	Portable Sign Stands with Roll Up signs
wz-22 10-19-99	Yodock Wall	Yodock barricade "2001m Barrier with T3m Apparatus" including 1.9 kg warning lights
WZ-23 10-26-99	WLI Industries	High Level Work Zone Sign System with Plasticore Sign Substrate
WZ-24 12-28-99	Traffix Devices	Various cones, tubes, drums, barricades, portable sign stands with roll-up signs
WZ-25 PENDING	Dicke Tool	Portable Sign Stands, Phase III and Phase IV
WZ-26 12-29-99	Work Area Prot.	B-400 Lighted Drum
WZ-27 Under Review	Roadmarker	Plastic Barricade
WZ-28 3-3-2000	MDI	Portable Sign Stands
wz-29 2-17-2000	Korman Signs	Various Portable Signs Stands: Aluminum, Alpolic, Roll Up
wz-30 4-10-2000	Sign Up Corp.	"Compact" Portable Sign Stands with Roll-Up Signs.
wz-31 3-21-2000	Cantel Barricade	Cantel of Medford Type III barricades as designed by Bent Mfg.
WZ-32 2-25-2000	Pacific Safety Supply	Portable Sign Stands with Roll Up Signs
wz-33 Written	3D Traffic Works	Barricade
wz-34 3-23-2000	Yodock Wall	Yodock barricade "2001 Barrier with T3m Apparatus"

wz-35 3-23-2000	Service Signing	Vertical Panel
WZ-36 To **Typing** May 23	Protection Services	Type I and II barricades
WZ-37 **Under** Review	Lang Products	Portable Sign Stands with Roll up signs
WZ-38 Under Review	Flex 0 Lite	Barricades, Sign Stands
wz-39 Under Review	Davidson Plastics	Type III Barricades
wz-40 **Under Review**	FHWA / TTI	Pooled-Fund Study Devices:Perf.Square Tube Type III with sign,
wz-41 Under Review	WLI Industr.	Type I and Type II barricades with Toughlite 2000 Lites.
wz-42 Under Review	cogent Enterprises	Cordonator Channelizer
Below is a list of the re		
		Lightweight LED warning light BCD-3V Switchable
unassigned	Penn Dot	Type III Barricade **3-28-00**
unassigned	Sign Up	Portable Sign Stands **3-28-00**
unassigned	3 D Traffic	Barricades **4-12-00**
unassigned	EmpcoLite	Bob's Barricades **3-17-00** 4-14-00 Traffic Control of Florida 5-12-00 need two letters
unassigned	Traffix	WZ Traffic control devices 4-20-00
unassigned	Dicke Tool	Portable sign stands 5-17-00
unassigned		

Notes:

1. Evaluation of Work Zone Barricades and Temporary Sian Supports, Mak, Bligh, and **Menges** Report No. 5388-1 Sponsored by the Texas DOT.
2. Evaluation of Work Zone Barricades, Mak, Bligh, and Menges Report No. TX-97/3910- S Sponsored by the Texas DOT.
3. The tested portable sign stands were supplied by Traffix Devices Inc. and **MDI**-Windmaster. Roll-up sign-sheeting was supplied by.Reflexite. **Plastic** barricade panels were also supplied by Traffix. The acceptable portable sign stands all featured horizontal cross braces of lightweight fiberglass or plastic elements. Recent testing of some portable sign stands at 90 degrees shows that horizontal cross braces of tubular metal penetrate the windshield and **are not** considered crashworthy without additional testing. Portable sign stands with horizontal metal tubes (or other inflexible elements) supporting flexible signs may not be used on the NHS in a position where they could be struck at right angles.
4. Horizontal and upright components of the hollow core recycled plastic barricades were supplied by Recycled Plastic Products, Inc.

Nicholas Artimovich
Federal Highway Administration
Office of Highway Safety Infrastructure
400 Seventh Street, SW
Washington, DC 20590
(202)366-1331 phone
(202)366-3988 fax
nick.artimovich@fhwa.dot.gov e-mail

Attachment A, TABLE II.2
BACKGROUND CRASH TEST INFORMATION FOR CATEGORY 2 DEVICES

CATEGORY 2 WORK ZONE TRAFFIC CONTROL DEVICES (Less than 45 kg, Reduced test procedures of NCHRP 350 are appropriate.)											
DEVICE	MANUFACTURER	SIZE (mm)	MATERIAL	MASS (kg)	LIGHTS, ETC?	TEST	SPEED (km/h)	VEHICLE (kg)	DEBRIS* (m)	VEHICLE DAMAGE	ACCEPTED
VERTICAL PANELS	Vertical Panels should be flexibly mounted on low-profile bases. Cinder blocks, tire rims, and other obstacles higher than 4 inches may not be used as bases.										
VB-RFL	Services & Materials Co			10.2	Bolted on	NY-201	97	816	59	Minor	Cat. 2
" "	" "			10.2	" "	"	48	816	46	Minor	Cat. 2
Air Spill	Flasher Handling		Rubber base and fiberglass support	33 Incl. Sand bags	None	NY-99	97	2041	54	None	Cat. 2
" "	" "		" "	"	" "	NY-100	32	2041	?	None	Cat. 2
" "			" "	"	" "	NY-101	80	2041	48	None	Cat. 2
" "	" "		" "	"	None	NY-102	32	2041	?	None	Cat. 2
" "	" "		" "	"	None	NY-103	80	2041	27	None	Cat. 2
" "	" "		" "	"	None	NY-104	80	2041	24	Dents	Cat. 2

Attachment A, TABLE II.2
BACKGROUND CRASH TEST INFORMATION FOR CATEGORY 2 DEVICES (Continued)

DEVICE	MANUFACTURER OR DESCRIPTION	SIZE	MATERIAL	MASS	LIGHTS, ETC?	TEST	IMPACT SPEED	TEST VEHICLE	DEBRIS	VEHICLE DAMAGE	Accepted
BARRICADES - Type 1, Type II, or Type III (Grey shading indicates failing tests)											
A-frame	Denver Type 1		Steel flat Alum. Panel	16.3kg	No Lights or Ballast	Head on, Perpen., & Down	97 km/h	1021 kg		Minor dents scrapes, and scratches	No, Results marginal. Hdwre no longer used
	Generic Type II		Steel angle 1/4" ply Panel	13.6kg	No Lights or Ballast &	Head on, Perpen.& Down	97 km/h	1021 kg		Minor dents scrapes, and scratches	No, Results Marginal
Breakaway	Type III		PVC Pipe		Cable threaded through all pipes	Normal	76 km/h	2040 kg	137 m	Minor dents scrapes, and scratches	Cat. 2
					Cable threaded through all pipes	Normal	68 km/h	1021 kg	84 m	Minor hood dents	Cat. 2
Type III	Texas 4x4 uprights, skid mounted		Wood,		Plywood sign panel	453360-1	101 km/h	816 kg	37 m	Windshield penetrated	No
Type III	Texas 4x4 uprights, skid mounted		Wood		No sign	453390-4	102 km/h	816 kg	56 m	Windshield penetrated	No
Type I	Texas 3 m wide, A-frame supports @ ends		Wood		Plywood sign	453360-5	99 km/h	816 kg	53 m	Windshield penetrated	No
Square Perf Tube Type III	Generic Perf. Square Steel Tubes		44 mm bases 38 mm uppers		Plastic rail elements	453790-3 On concrete	102 km/h	816 kg	109 m	Minor dents, scratches and scrapes	Cat.

Attachment A, TABLE II.2
BACKGROUND CRASH TEST INFORMATION FOR CATEGORY 2 DEVICES (Continued)

DEVICE	MANUFACTURER OR DESCRIPTION	SIZE	MATERIAL	MASS	LIGHTS, ETC?	TEST	IMPACT SPEED	TEST VEHICLE	DEBRIS	VEHICLE DAMAGE	Accepted
BARRICADES - Type 1, Type II, or Type III (Continued) (Grey shading indicates failing tests)											
Square Perf Tube Type III	Generic Perf. Square Steel Tubes		44 mm bases 38 mm uppers		Plastic rail elements	453880-1 On wet soil	101 km/h	820 kg	121 m	Dents, etc Windshield cracked only	Cat. 2
" "	" "		38 mm bases 38 mm uppers		Wooden rail elements	453880-2 On wet soil	103 km/h	820 kg	46 m	Minor dents, scrapes and scratches	Cat. 2
Type III	Tex-Mex Barricade		Plastic Rect. Tubular elements		Plastic panels	453790-2	100 km/h	820 kg	54 m	Minor dents, scrapes, & scratches.	Cat. 2
Type III	Hollow Core Recycled Plastic with Wood Base		Recycled plastic tubes.		Recycled plastic rail elements	453790-4	102 km/h	820 kg	77 m	Minor dents, scrapes & scratches	Cat. 2
Type III	Hollow core recycled plastic with wood base		Recycled Plastic tubes		Recycled plastic rail elements	453880-3	101 km/h	820 kg	48 m	Minor dents, scrapes and scratches.	Cat. 2
Type III	Solid Recycled Plastic		Recycled plastic lumber		Recycled plastic rail elements	453790-5	101 km/h	820 kg	63 m	259 mm dent into roof & penetrated	No

Attachment A, TABLE II.2
BACKGROUND CRASH TEST INFORMATION FOR CATEGORY 2 DEVICES (Continued)

PORTABLE SIGN SUPPORTS (Grey shading indicates failing tests)

DEVICE	MANUFACTURER OR DESCRIPTION	SIZE	MATERIAL	MASS	LIGHTS, ETC?	TEST	IMPACT SPEED	TEST VEHICLE	DEBRIS	VEHICLE DAMAGE	Accepted
Spring Mounted	(unknown mfr.)		Metal frame		Plywood sign	453360-2	97 km/h	916 kg	21 m	Windshield penetrated	No
Spring Mounted	(unknown mfr.)		Metal Frame		Fabric sign	453580-1	99 km/h	816 kg	73 m	Minor dents scrapes, and scratches`	Cat. 2
Easel Support	(unknown mfr.)		Metal frame		Plastic/fabric sign	453580-2	99 km/h	816 kg	32 m	Windshield penetrated	No
Rigid frame	(unknown mfr.)		Metal frame		Plastic/fabric sign	453790-1	98 km/h	816 kg	20 m	Minor dents scrapes, and scratches	Cat. 2
Trailer	Texas Gen Serv. Div.		Metal frame on wheels		Wooden sign panel	453580-3	99 km/h	816 kg	106 m	Windshield cracked slightly	Cat. 2
Fixed Wood	Wood Type III on skids		Wood		Plywood sign panel at 2.13 m	453360-3	98 km/h	816 kg	59 m	Minor	Cat. 2
Perf Square Steel Tube	Type III Barricade with Wood Panels		Sign on perf tubes att to cross panels		Plywood sign panel at 1.5 m	453880-5	101 km/h	816 kg	91 m	Signif. damage: windshield penetrated	No
			Sign on perf tubes att to frame		Plywood sign panel at 1.5 m	453880-7	100 kmh	816 kg	88 m	Windshield shattered but not penetrated	No, Results Marginal to Poor
Hollow core plastic	Type III barricade with Solid Plastic Base		Sign on plastic posts att. to frame		Aluminum Sign Panel at 1.5m	453880-6	99 kmh	816 kg.	83 m	70 mm dent to roof, wind shield ok	No, Results marginal to Poor

* Worker Threat
** No lights, signs, ballast, nor any other features may be attached to the top or sides of the drum body under this category. Only closed-top drums will be permitted in this category.
*** Drum Base Ballast must be sand or rubber tire sidewalls. No ballasting of drum bodies will be permitted
**** Due to the variety of available drums, the FHWA will not discriminate between them on the question of debris. Individual manufacturers may be asked to show that their drums do not cause hazardous debris to workers or adjacent traffic.

3.2.2 Spring-Mounted Sign Support with Plastic/Fabric Sign Panel (Test No. 453580-1)

A schematic of the spring-mounted portable sign support with a 1219 mm x 1219 mm (48 in x 48 in) plastic/fabric sign mounted at a height of 305 mm (1 ft) is shown in Figure 21. The test vehicle was a 1987 Yugo GV, as shown in Figure 22. Dimensions and information on the vehicle are given in Appendix Figure 93. The test vehicle impacted the sign support head-on with the centerline of the vehicle aligned with the centerline of the sign support, traveling at a speed of 99.0 km/h (61.5 mi/h).

Upon impact, the plastic/fabric sign panel and the upper support arm began to deform on the hood. At 20 msec after impact, the upper support arm separated from the lower support arm and the upper corner of the sign panel released. The lower corner of the sign panel released at 39 msec. The upper support arm and sign panel flipped up and contacted the roof of the vehicle at 98 msec. The support and panel lost contact at 119 msec as the vehicle was traveling at a speed of 93.6 km/h (58.2 mi/h). The support base hung up on the undercarriage of the vehicle and rode along with the vehicle. After the vehicle cleared the immediate test site, brakes on the vehicle were applied at 500 msec after impact. Prior to brake application, the test vehicle was traveling on a relatively straight-forward path. The vehicle subsequently came to rest 58 m (191 ft) down and 3 m (10 ft) to the west of the point of impact. The base support continued forward another 15 m (49 ft) after the vehicle had stopped. Sequential photographs of the test period are shown in Figure 23.

The spring-mounted portable sign support separated upon impact, as can be seen in Figure 22. Debris were strewn along the path of the vehicle in an area 3 m (10 ft) wide by 73 m (240 ft) long. Damage to the vehicle is also shown in Figure 22. There was a maximum crush in the bumper of 70 mm (2.8 in) from impact with the support. There was a 32 mm (1.3 in) deep dent in the roof toward the rear, the windshield received a small chip and the hood, bumper, and grill were dented and scratched.

A brief summary of the results of this test is presented in Figure 24. The plastic/fabric sign panel and upper support arm of the spring-mounted portable sign support separated and went up and over the vehicle, contacting the roof, but did not show potential risk of intrusion into the passenger compartment. Debris from the sign support remained along the path of the vehicle posing only minor potential hazard to other traffic or workers. The vehicle sustained damage to the front bumper, hood, windshield and roof. The longitudinal occupant impact velocity was 2.2 m/s (7.2 ft/s) and the highest 10-msec average ridedown acceleration was -1.1 g. There was no occupant contact in the lateral direction during the test period. The maximum 50-msec average accelerations were -1.4 g in the longitudinal direction and -0.3 g in the lateral direction. The vehicle exited the immediate test site in a relatively smooth, stable manner and showed no potential for intrusion into adjacent traffic lanes.

In summary, the spring-mounted portable sign support with plastic/fabric sign panel was judged to have met all evaluation criteria set forth in NCHRP Report 350.

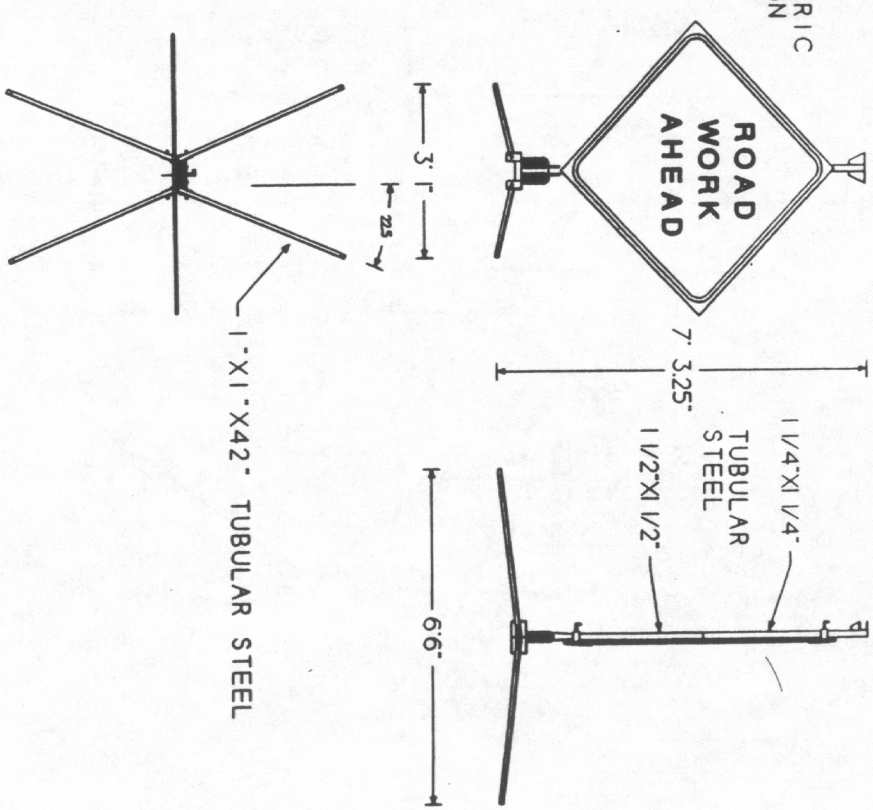

Figure 21. Schematic of Spring Mounted Sign Support with Plastic/Fabric Sign (Test No. 453580-1)

3.2.4 Portable Sign Support with Plastic/Fabric Sign (Test No. 453790-1)

A schematic of the portable sign support with a 1219 mm x 1219 mm (48 in x 48 in) plastic/fabric sign mounted at a height of 305 mm (1 ft) is shown in Figure 29. The test vehicle was a 1988 Chevrolet Sprint, as shown in Figure 30. Dimensions and information on the vehicle are given in Appendix Figure 94. The test vehicle impacted the sign support head-on with the centerline of the vehicle aligned with the centerline of the sign support, traveling at a speed of 97.9 km/h (60.9 mi/h).

As the vehicle impacted the portable sign support, the upper portion of the sign separated from the base and the plastic/fabric sign panel formed to the front of the vehicle. The plastic/fabric sign panel and reinforcement strips contacted the windshield at 50 msec and 69 msec, respectively. At 100 msec, the flags contacted the roof of the vehicle and separated from the sign panel. At 221 msec, the vehicle cleared the installation site traveling at a speed of 95.8 km/h (59.6 mi/h). Prior to brake application, the vehicle was tracking straight-forward. The vehicle subsequently came to rest 102 m (336 ft) down and 1.7 m (5.5 ft) to the right of the point of impact. Sequential photographs of the test period are shown in Figure 31.

The portable sign support separated upon impact, as can be seen in Figure 30. Fragments of the sign were strewn along the path of the vehicle in an area 5.5 m (18.0 ft) wide by 19.3 m (63.3 ft) long. Damage to the vehicle is also shown in Figure 30. There was no measurable crush to the exterior of the vehicle, only scratches on the hood and on the roof where the flags made contact.

A brief summary of the results of this test is presented in Figure 32. The portable sign support shattered upon impact. Fragments of the plastic/fabric sign panel and the sign support made contact with the roof, but there was no penetration or intrusion into the occupant compartment. Debris from the sign was thrown along an area 5.5 m (18.0 ft) wide by 19.3 m (63.3 ft) long. The fragments were not large enough to pose potential hazard to oncoming traffic in adjacent lanes or to workers in the area. The vehicle sustained minor scratches to the hood and roof. There was no measurable crush to the exterior of the vehicle. There was no longitudinal or lateral occupant impact. The 50-msec average accelerations were -0.6 g in the longitudinal direction and -0.4 g in the lateral direction. The vehicle exited the immediate test site in a relatively smooth, stable manner and showed no potential for intrusion into adjacent traffic lanes.

In summary, the portable sign support with plastic/fabric sign panel was judged to have met all evaluation criteria set forth in NCHRP Report 350.

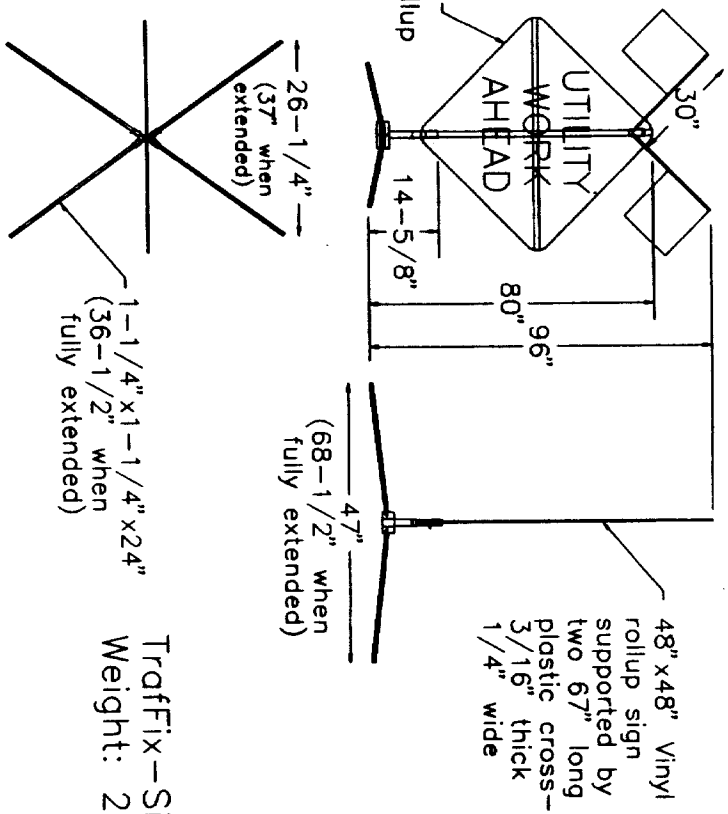

Figure 29. Schematic of Portable Sign Support with Plastic/Fabric Sign (Test No. 453790-1)

3.3 TRANSPORTABLE SIGN SUPPORT (Test No. 453580-3)

A transportable sign support trailer was designed and fabricated by D-4 for use in maintenance operations. The trailer allows the sign support to be transported from site to site and set up with minimal effort. A schematic of the D-4 sign trailer with a 1219 mm x 1219 mm (48 in x 48 in) wooden sign panel mounted at a height of 1.52 m (5 ft) is shown in Figure 33. The test vehicle was a 1987 Yugo GV, as shown in Figure 34. Dimensions and information on the vehicle are given in Appendix Figure 93. The test vehicle impacted the sign trailer head-on with the centerline of the vehicle aligned with the centerline of the trailer, traveling at a speed of 98.6 km/h (61.3 mi/h).

At 12 msec after impact, the trailer wheels began to move. The sign panel support released from the trailer support at 53 msec. By 104 msec, the sign panel and support separated from the trailer. The sign panel and support went over the vehicle and made contact with the roof at 138 msec. Loss of contact with the sign panel and support occurred at 160 msec at which time the vehicle had slowed to 88.1 km/h (54.9 mi/h). The trailer remained in contact with the front of the vehicle until brakes were applied at 3.0 seconds after impact. The vehicle subsequently came to rest 99 m (325 ft) down and 2 m (6.5 ft) to the west of the point of impact. The trailer continued another 7 m (23 ft) forward before coming to rest. Sequential photographs of the test period are shown in Figure 35.

As shown in Figure 34, the sign panel and support separated from the trailer upon impact. The sign panel and upper support structure came to rest 2 m (7 ft) down and 4 m (12 ft) to the left side of the vehicle path. The sign support trailer came to rest 106 m (348 ft) down and 3 m (9 ft) to the right of the point of impact with a fragment 3.4 m (11 ft) west of the trailer. The trailer was deformed and some of the welds broken. As can also be seen in Figure 34, the vehicle sustained moderate damage to the front. The maximum crush at bumper height was 330 mm (13.0 in). The windshield was cracked starting at the edge of the roof near the center. There were also two dents in the roof, the deepest approximately 8 mm (0.3 in). There were dents and scratches on the hood and the bumper, grill and radiator were damaged.

A brief summary of the results of this test is presented in Figure 36. The sign panel and upper support structure separated from the trailer upon impact and went up and over the vehicle, contacting the roof just above the windshield, causing a few stress cracks. There was no penetration of the passenger compartment and the cracks did not impair driver vision. Debris from the sign support trailer remained along the path of the vehicle posing minimal potential hazard to other traffic or workers. The trailer was deformed and some of the welds on the frame had separated. The vehicle sustained 330 mm (13.0 in) crush to the center front at bumper height and the bumper was partially detached from the vehicle. The hood was scratched and dented, the windshield was cracked and the roof deformed slightly. The longitudinal occupant impact velocity was 2.0 m/s (6.6 ft/s) and the highest 10-msec ridedown acceleration was 0.4 g. There was no occupant contact in the lateral direction during the test period. The maximum 50-msec average accelerations were -3.2 g in the longitudinal direction and -0.3 g in the lateral direction. The vehicle exited the immediate test site in a relatively smooth, stable manner and showed no potential for intrusion into adjacent traffic lanes.

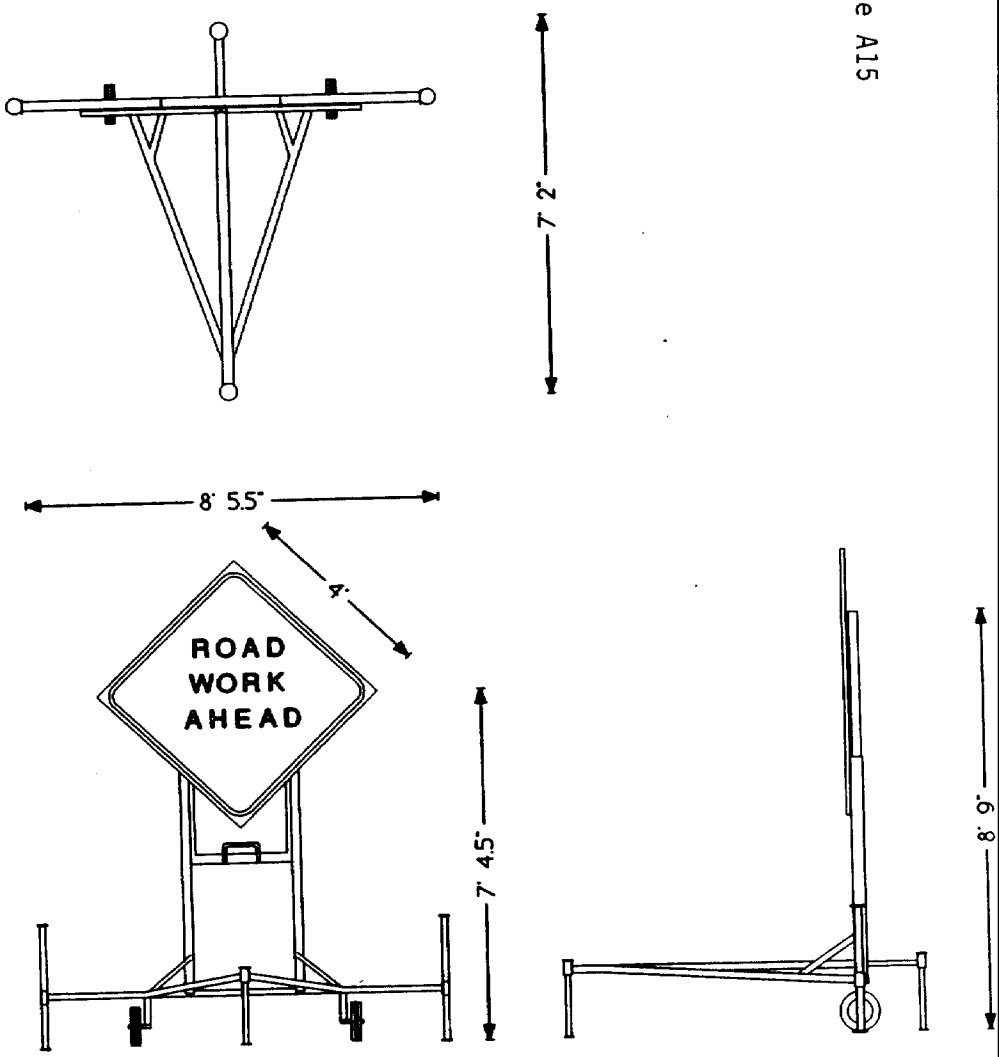

Figure 33. Schematic of D-4 Sign Trailer with Wooden Sign Panel (Test No. 453580-3)

3.4 FIXED SIGN SUPPORT (Test No. 453360-3)

The skid-mounted sign support is shown in the TxDOT "Barricade and Construction Standards" sheets as one of the approved fixed sign support designs. Signs erected on fixed supports are required to have a minimum height from the ground to the bottom of the sign panel of 1.52 m (5 ft) in rural areas and 2.13 m (7 ft) in urban applications. The mounting height of 1.52 m (5 ft) was considered to have a higher potential for impacting and penetrating the windshield of an impacting vehicle and thus a more critical condition. Also, a pickup truck was considered a more critical test vehicle than the small passenger car due to the geometry of the sign support in relation to the vehicle. Thus, a mounting height of 1.52 m (5 ft) for the sign panel was selected for the test as well as a pickup truck.

Note that the Department has since revised its standards to use a sign panel mounting height of 2.13 m (7 ft) for all fixed sign supports in both rural and urban applications. However, since the 1.52-m (5-ft) mounting height is considered more critical from the impact standpoint, results of this crash test should also apply to a fixed sign support with a mounting height of 2.13 m (7 ft). In other words, it is believed that a fixed sign support with a mounting height of 2.13 m (7 ft) would perform equally, if not better, than one with a mounting height of 1.52 m (5 ft). Since the sign support performed satisfactorily in this crash test, it can be concluded that a fixed sign support with a 2.13-m (7-ft) mounting height would also perform satisfactorily and there is no need to rerun the test with the higher mounting height.

A schematic of the skid-mounted sign support with a 1219 mm x 1219 mm (48 in x 48 in) wooden sign panel mounted at a height of 1.52 m (5 ft) is shown in Figure 37. The test vehicle was a 1984 Chevrolet pickup truck, as shown in Figure 38. Dimensions and information on the vehicle are given in Appendix Figure 95. The test vehicle impacted the skid mounted sign support head-on with the centerline of the vehicle aligned with the centerline of the sign support, traveling at a speed of 98.0 km/h (60.9 mi/h).

Immediately upon impact, the vertical supports began to fracture at bumper height and approximately 1.8 m (6 ft) above ground level. The panel and pieces of the support rose up and over the hood of the pickup, while the pickup traveled over the bases. A broken segment of the support then struck the roof near the rear of the cab at 79 msec and bounced off at 126 msec. Pieces of the support continued over the pickup with several pieces landing in the bed of the pickup. The time at loss of contact with the sign support, i.e., when the fractured support ended contact with the vehicle, was 126 msec and the vehicle had slowed to 91.4 km/h (56.8 mi/h). After the vehicle cleared the immediate test site, brakes on the vehicle were applied at 950 msec after impact. Prior to brake application the test vehicle was traveling on a relatively straight-forward path. The vehicle subsequently came to rest 133 m (435 ft) down and 4 m (12 ft) to the left of the point of impact. Sequential photographs of the test period are shown in Figure 39.

As can be seen in Figure 38, the skid-mounted sign support fractured upon impact. Debris and sand were strewn along the path of the vehicle in an area 9 m (30 ft) wide by 59 m (195 ft) long. Damage to the vehicle is also shown in Figure 38. There were two dents in the bumper, 13 mm (0.5 in) and 19 mm (0.75 in) from impact with the supports. There was a small dent in the rear of the roof of the cab.

A brief summary of the results of this test is presented in Figure 40. The vertical supports fractured upon impact and the sign panel and fractured vertical support impacted the roof of the vehicle but did not deform into the occupant compartment, therefore showing no potential risk to occupants of the vehicle. Debris from the barricade was thrown along an area 9 m (30 ft) wide by 59 m (195 ft) long. Some fragments were fairly large which could pose potential hazard to oncoming traffic in adjacent lanes and to workers in the area. Sand was also scattered on the pavement which could lead to loss of control of other vehicles. The vehicle sustained damage to the front bumper, hood, and roof. The longitudinal occupant impact velocity was 0.7 m/s (2.2 ft/s), and the highest 10-msec average ridedown acceleration was -0.1 g. The lateral occupant impact velocity was 0.8 m/s (2.6 ft/s), and the highest 10-msec average ridedown acceleration was -0.2 g. The maximum 50-msec average accelerations were -0.8 g in the longitudinal direction and 0.5 g in the lateral direction. The vehicle exited the immediate test site in a relatively smooth, stable manner and showed no potential for intrusion into adjacent traffic lanes.

In summary, the skid-mounted sign support with wooden sign panel was judged to have met all evaluation criteria set forth in NCHRP Report 350. As discussed previously, this assessment would apply to both mounting heights of 1.52 m (5 ft) and 2.13 m (7 ft).

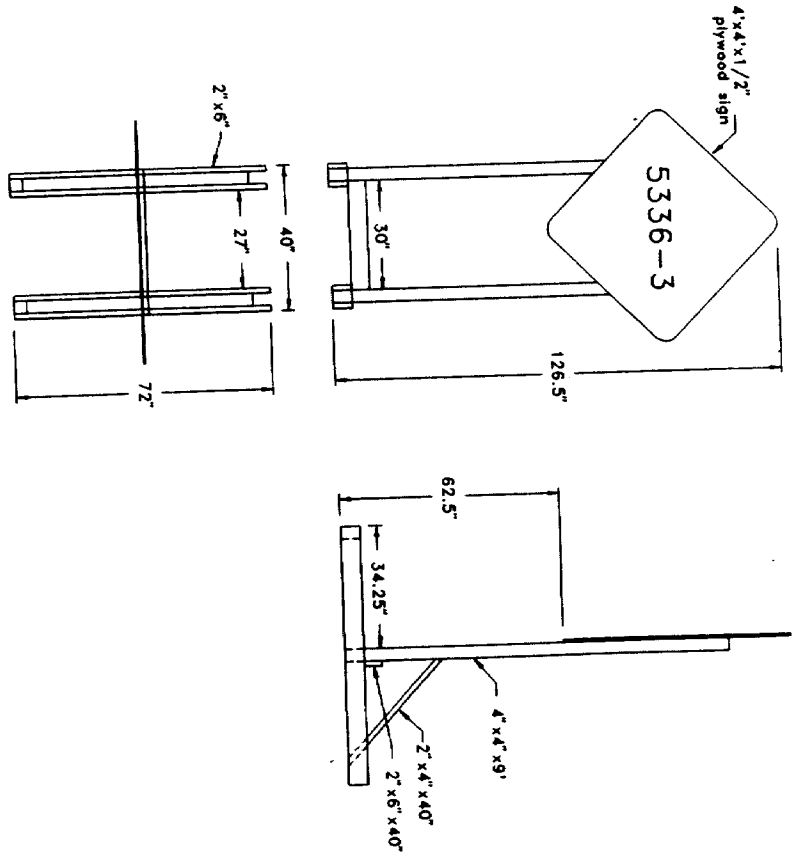

Figure 37. Schematic of Skid-Mounted Sign Support with Wooden Sign Panel (Test No. 453360-3)

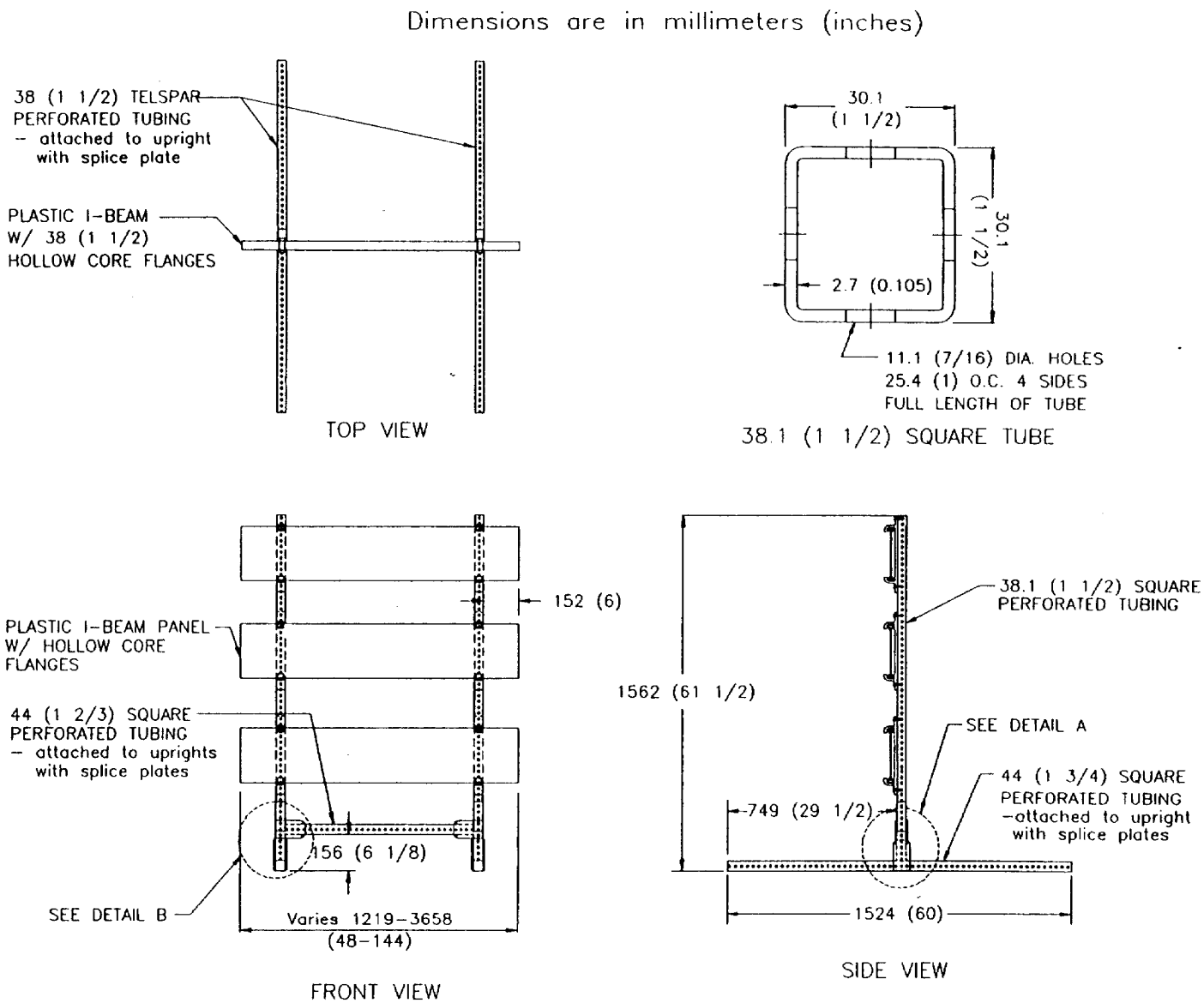

Figure 41. Perforated Steel Tube Type III Barricade with Plastic Panels

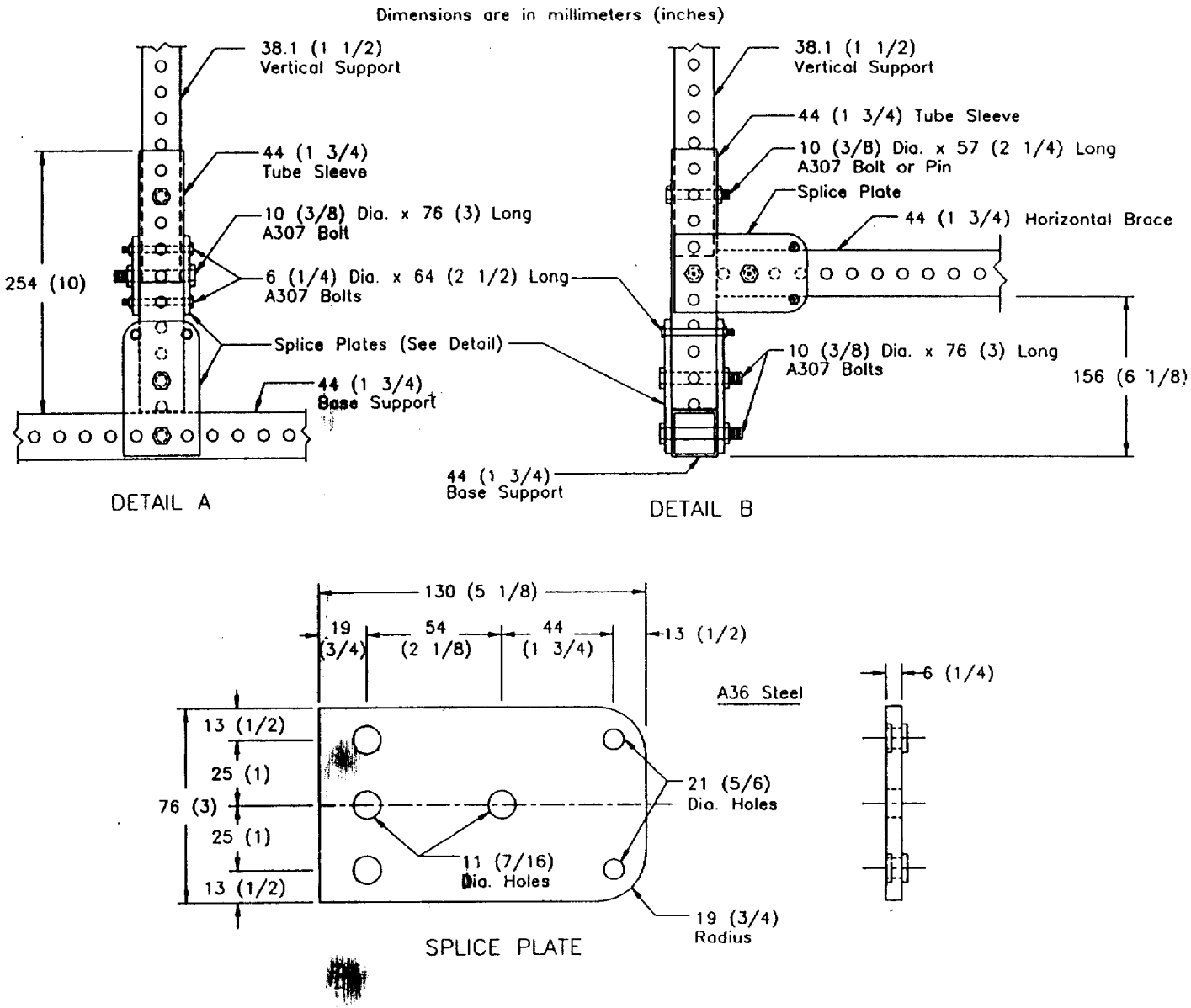

Figure 41. Perforated Steel Tube Type III Barricade with Plastic Panels (continued)

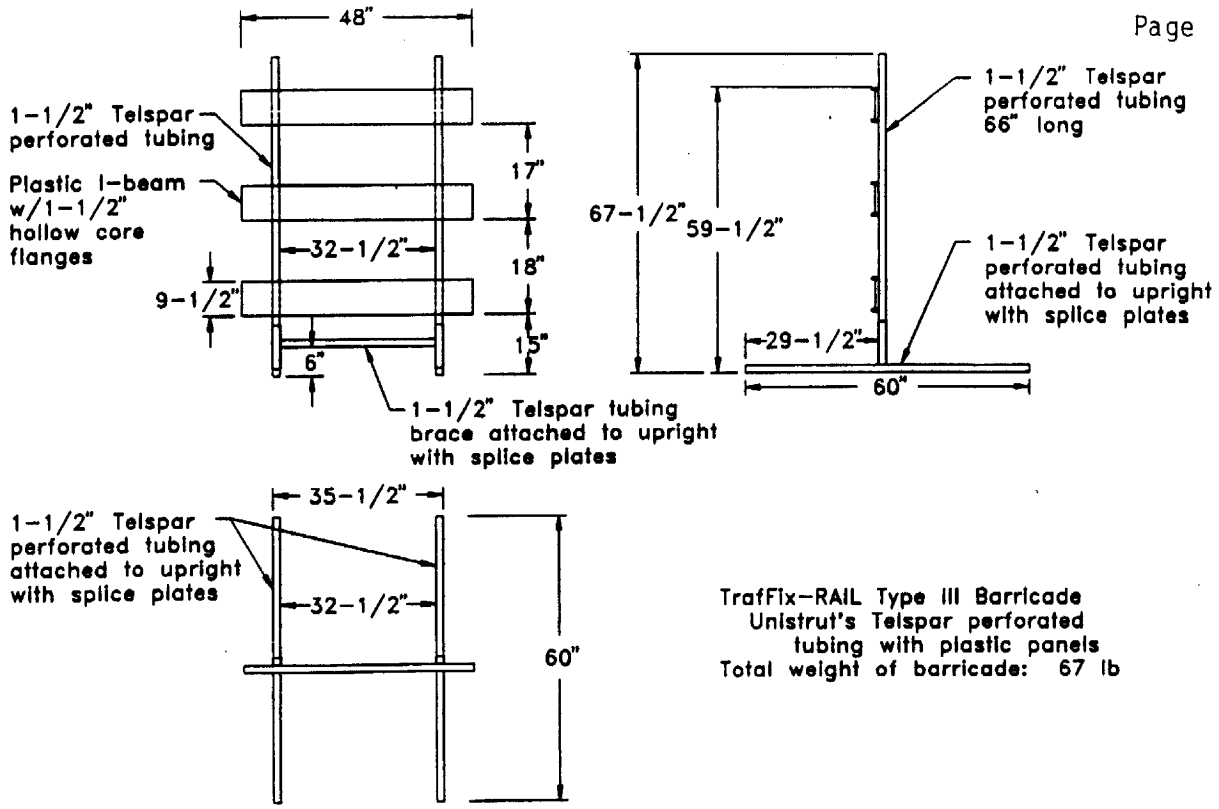

Figure 45. Schematic of Perforated Tubing Type III Barricade with Plastic Rail Elements (Test No. 453790-3)

4.2.1 Perforated Tubing with Plastic Rail Elements (Test No. 453790-3)

A schematic of the Type III barricade fabricated from perforated steel tubing with plastic rail elements is shown in Figure 45. The barricade was purchased from TrafFix Devices, Inc. The test vehicle was a 1988 Chevrolet Sprint, as shown in Figure 46. Dimensions and information on the vehicle are given in Appendix Figure 94. The test vehicle impacted the barricade head-on with the centerline of the vehicle aligned with the centerline of the barricade, traveling at a speed of 102.0 km/h (63.4 mi/h).

As the vehicle impacted the vertical supports, the middle and upper plastic rail elements separated from the vertical supports. The lower plastic rail element and vertical supports deformed and wrapped around the front of the vehicle. Windshield contact by the middle plastic rail element occurred at 42 msec and with the upper rail element at 54 msec. The vehicle lost contact with the barricade at 69 msec, traveling at a speed of 95.2 km/h (59.2 mi/h). Prior to brake application, the vehicle was tracking straight-forward. The vehicle subsequently came to rest 91.7 m (301.0 ft) down and 7.9 m (26.0 ft) to the left of the point of impact. Sequential photographs of the test period are shown in Figure 47.

As can be seen in Figure 46, the plastic rail elements separated from the vertical supports upon impact. The shear pins for the vertical supports sheared as designed, but the impact speed was too high for the vertical supports to fold down. Instead, the vertical supports wrapped around the front the vehicle and stayed with the vehicle until final rest. Debris and sand were strewn along the path of the vehicle in an area 11 m (35 ft) wide by 109 m (358 ft) long. Damage to the vehicle is also shown in Figure 46. The bumper, grill, and hood were dented and scratched. The windshield was cracked, however, no penetration or intrusion of the occupant compartment occurred. Maximum crush to the exterior of the vehicle at the left front corner of the bumper was 70 mm (2.8 in).

A brief summary of the results of this test is presented in Figure 48. The plastic rail elements separated from the vertical supports and made contact with the hood and windshield, but did not penetrate the occupant compartment. Debris from the barricade was thrown along an area 11 m (35 ft) wide by 109 m (358 ft) long. The metal supports and bases rode along in front of the vehicle and most of the remaining fragments were not large or heavy enough to pose potential hazard to oncoming traffic in adjacent lanes or to workers in the area. Damage to the vehicle included dents and scratches to the bumper, grill, and hood. The windshield was cracked by contact with the plastic rail elements, but there was no penetration or intrusion into the occupant compartment. The longitudinal occupant impact velocity was 1.7 m/s (5.7 ft/s) and the highest 10-msec average ridedown acceleration was -0.3 g. There was no lateral occupant contact. The 50-msec average accelerations were -2.9 g in the longitudinal direction and -0.5 g in the lateral direction. The vehicle exited the immediate test site in a relatively smooth, stable manner and showed no potential for intrusion into adjacent traffic lanes.

In summary, the Type III barricade fabricated from perforated tubing with plastic rail elements was judged to have met all evaluation criteria set forth in NCHRP Report 350.

4.2.3 Perforated Tubing with Wooden Rail Elements, Wet Soil Condition (Test No. 453880-2)

A Type III barricade fabricated from perforated steel tubing with wooden rail elements, similar to that used in test nos. 453790-3 and 453880-1, was tested under wet soil condition, i.e., the barricade was placed on wet soil instead of a concrete pavement surface. A schematic of the barricade is shown in Figure 53. The barricade was fabricated from perforated steel tubing and wooden panels. The test vehicle was a 1989 Chevrolet Sprint, as shown in Figure 54. Dimensions and information on the vehicle are given in Appendix Figure 90. The test vehicle impacted the plastic Type III barricade head-on with the centerline of the vehicle aligned with the centerline of the barricade, traveling at a speed of 102.7 km/h (63.4 mi/h).

As the vehicle impacted the lower rail element of the barricade, the wooden rail element split and then shattered. The vertical supports deformed and wrapped around the front of the vehicle. At 12 msec after impact, the middle wooden rail element split. At 14 msec, the right vertical support fractured at bumper height and at 19 msec, the left vertical support also fractured at bumper height. The top wooden rail element contacted the hood of the vehicle at 38 msec. At 46 msec, the right vertical support separated from the rail element and became airborne while the vehicle was traveling at a speed of 93.4 km/h (58.0 mi/h). The left vertical support rode along the front of the vehicle and lost contact with the vehicle at 176 msec as the vehicle had slowed to 92.5 km/h (57.5 mi/h). Prior to brake application, the vehicle was tracking straight-forward. The vehicle subsequently came to rest 116 m (379 ft) down and 6.7 m (21.8 ft) left of the point of impact. Sequential photographs of the test period are shown in Figure 55.

As can be seen in Figure 54, the barricade shattered upon impact. Debris and sand were strewn along the path of the vehicle in an area 11 m (36.5 ft) wide by 46 m (151 ft) long. Damage to the vehicle is also shown in Figure 54. There were dents and scratches along the bumper, grill, and hood and the left rear tire was aired-out.

A brief summary of the results of this test is presented in Figure 56. The barricade shattered upon impact and broken segments of the barricade made contact with the hood, but did not penetrate the occupant compartment. Debris from the barricade was thrown along an area 11 m (36.5 ft) wide by 46 m (151 ft) long. Most fragments were not large enough to pose potential hazard to oncoming traffic in adjacent lanes. The fractured metal vertical supports could cause minor hazard to workers in the area. The vehicle sustained minor damage to the bumper, grill, and hood. There was no penetration or intrusion into the occupant compartment. The longitudinal occupant impact velocity was 2.3 m/s (7.6 ft/s) and the highest 10-msec average ridedown acceleration was -1.8 g. There was no lateral occupant contact. The 50-msec average accelerations were -3.5 g in the longitudinal direction and 0.7 g in the lateral direction. The vehicle exited the immediate test site in a relatively smooth, stable manner and showed no potential for intrusion into adjacent traffic lanes.

In summary, the Type III barricade fabricated from perforated tubing with wooden rail elements tested with wet soil condition was also judged to have met all evaluation criteria set forth in NCHRP Report 350.

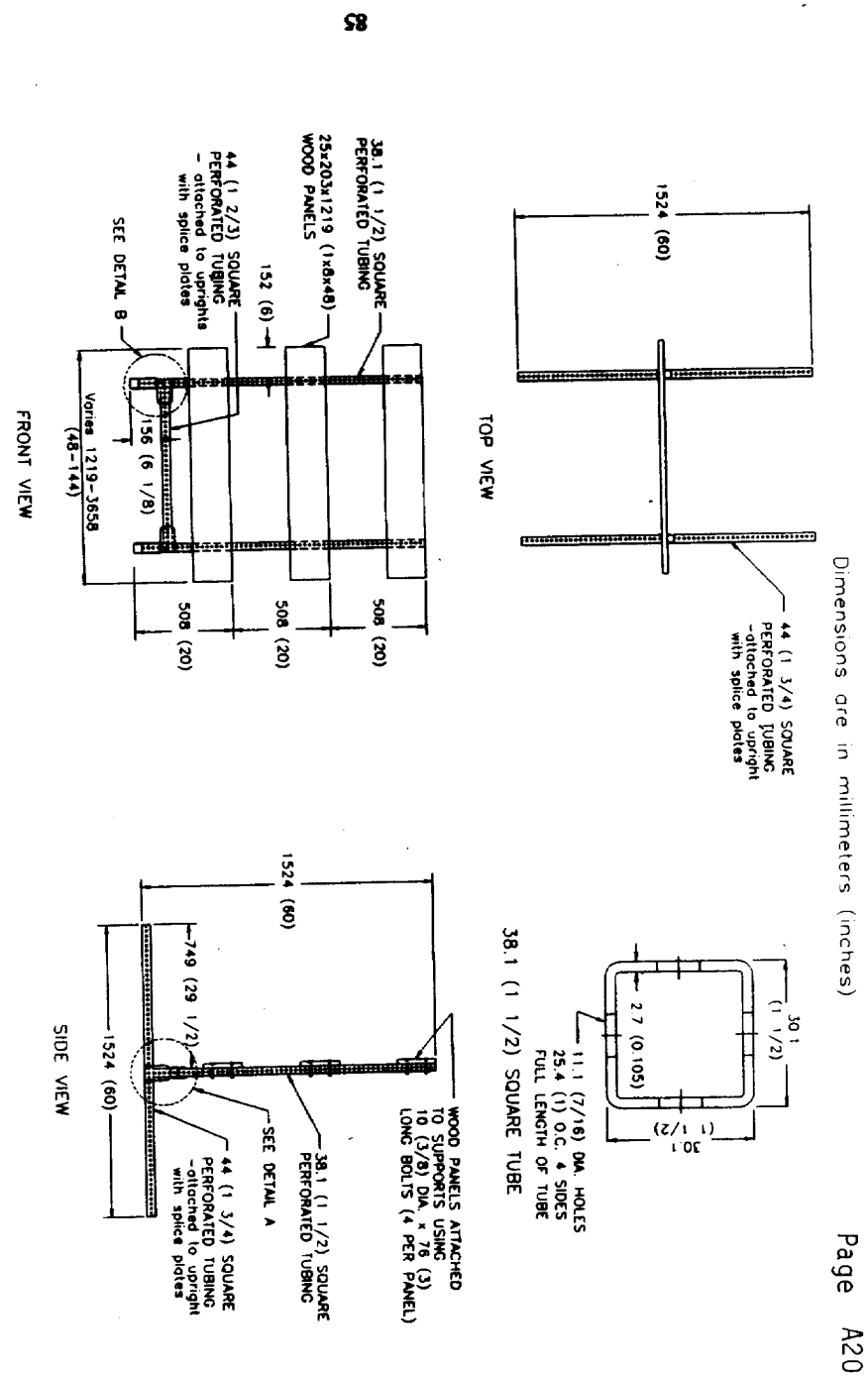

Figure 42. Perforated Steel Tube Type III Barricade with Wood Panels

4.2.4 Plastic Type III Barricade by Tex-Mex Barricade (Test No. 453790-2)

A schematic of the plastic Type III barricade manufactured by Tex-Mex Barricade is shown in Figure 57. The test vehicle was a 1988 Chevrolet Sprint, as shown in Figure 58. Dimensions and information on the vehicle are given in Appendix Figure 94. The test vehicle impacted the plastic Type III barricade head-on with the centerline of the vehicle aligned with the centerline of the barricade, traveling at a speed of 100.3 km/h (62.4 mi/h).

As the vehicle impacted the barricade, the vertical supports separated from the base as one unit and deformed to the front of the vehicle. At 57 msec, the barricade was in full contact with the hood of the vehicle and continued up and over the vehicle. The vehicle lost contact with the barricade at 69 msec, traveling at a speed of 96.3 km/h (59.8 mi/h). Prior to brake application, the vehicle was tracking straight-forward. The vehicle subsequently came to rest 85 m (278 ft) down and 2.6 m (8.5 ft) left of the point of impact. Sequential photographs of the test period are shown in Figure 59.

As can be seen in Figure 58, the barricade separated from the base upon impact. Debris and sand were strewn along the path of the vehicle in an area 6 m (20 ft) wide by 54 m (176 ft) long. Damage to the vehicle is also shown in Figure 58. The bumper was pushed up slightly and the headlight on the driver's side was loose. The hood was dented on each corner and there were three scratches along the hood.

A brief summary of the results of this test is presented in Figure 60. The vertical supports of the barricade separated from the base upon impact and made contact with the hood, but did not penetrate the occupant compartment. Debris from the barricade was thrown along an area 6 m (20 ft) wide by 54 m (176 ft) long. Most fragments were not large enough or heavy enough to pose potential hazard to oncoming traffic in adjacent lanes; however, the vertical supports may pose a slight hazard to workers in the area. The vehicle sustained minor damage to the bumper and hood. The longitudinal occupant impact velocity was 0.8 m/s (2.5 ft/s) and the highest 10-msec average ridedown acceleration was -0.2 g. There was no lateral occupant contact. The 50-msec average accelerations were -1.9 g in the longitudinal direction and -0.3 g in the lateral direction. The vehicle exited the immediate test site in a relatively smooth, stable manner and showed no potential for intrusion into adjacent traffic lanes.

In summary, the plastic Type III barricade by Tex-Mex Barricade was judged to have met all evaluation criteria set forth in NCHRP Report 350.

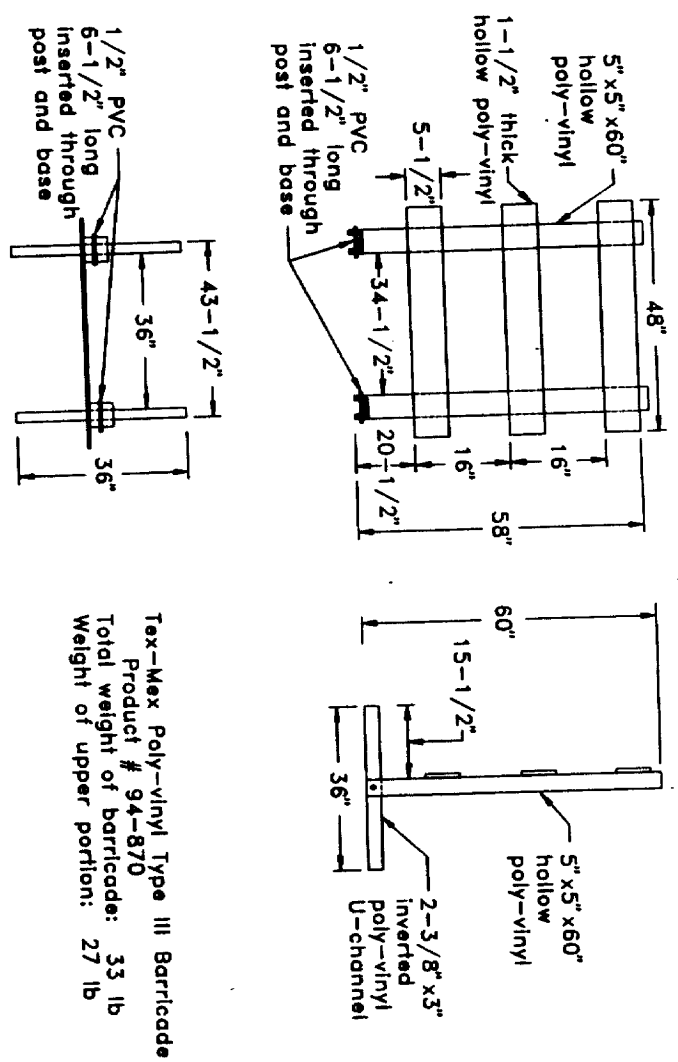

Figure 57. Schematic of Plastic Type III Barricade by Tex-Mex Barricade (Test No. 453790-2)

4.2.5 Hollow Core Recycled Plastic Material with Wooden Base (Test No. 453790-4)

A schematic of the Type III barricade fabricated from hollow core recycled plastic material with a wooden base is shown in Figure 61. The construction was similar to that of the Type III wooden barricade. The test vehicle was a 1988 Chevrolet Sprint, as shown in Figure 62. Dimensions and information on the vehicle are given in Appendix Figure 96. The test vehicle impacted the barricade head-on with the centerline of the vehicle aligned with the centerline of the barricade, traveling at a speed of 101.9 km/h (63.3 mi/h).

At 10 msec after impact, the braces for the vertical supports broke away, and at 15 msec, the vertical supports and rail elements separated from the base as a single unit. The top of the vertical supports contacted the wipers in the windshield area at 47 msec. The vehicle lost contact with the barricade at 87 msec, traveling at a speed of 93.5 km/h (58.1 mi/h). Prior to brake application, the vehicle was tracking straight-forward. The vehicle subsequently came to rest 76 m (248 ft) down and 1.5 m (5 ft) to the left of the point of impact. Sequential photographs of the test period are shown in Figure 63.

As can be seen in Figure 62, the hollow core recycled plastic vertical supports and rail elements separated from the wooden base upon impact. Debris and sand were strewn along the path of the vehicle in an area 17 m (55 ft) wide by 77 m (251 ft) long. Damage to the vehicle is also shown in Figure 62. The bumper and hood of the vehicle were scratched. No penetration or intrusion of the occupant compartment occurred. There was no measurable crush to the exterior of the vehicle.

A brief summary of the results of this test is presented in Figure 64. The hollow core plastic vertical supports and rail elements separated from the wooden base and made contact with the hood and windshield of the vehicle, but did not penetrate the occupant compartment. Debris from the barricade was thrown along an area 17 m (55 ft) wide by 77 m (251 ft) long. The plastic vertical supports and wooden braces rode along with the vehicle. The wooden base remained near the point of impact and most of the remaining fragments were not large enough to pose potential hazard to oncoming traffic in adjacent lanes or to workers in the area. Damage to the vehicle included scratches to the bumper and hood. The plastic vertical supports which separated from the wooden base, contacted the windshield area, but there was no penetration or intrusion into the occupant compartment. The longitudinal occupant impact velocity was 1.6 m/s (5.3 ft/s) and the highest 10-msec average ridedown acceleration was 0.4 g. There was no lateral occupant contact. The 50-msec average accelerations were -3.3 g in the longitudinal direction and -0.3 g in the lateral direction. The vehicle exited the immediate test site in a relatively smooth, stable manner and showed no potential for intrusion into adjacent traffic lanes.

In summary, the Type III barricade fabricated from hollow core recycled plastic material with wooden base was judged to have met all evaluation criteria set forth in NCHRP Report 350.

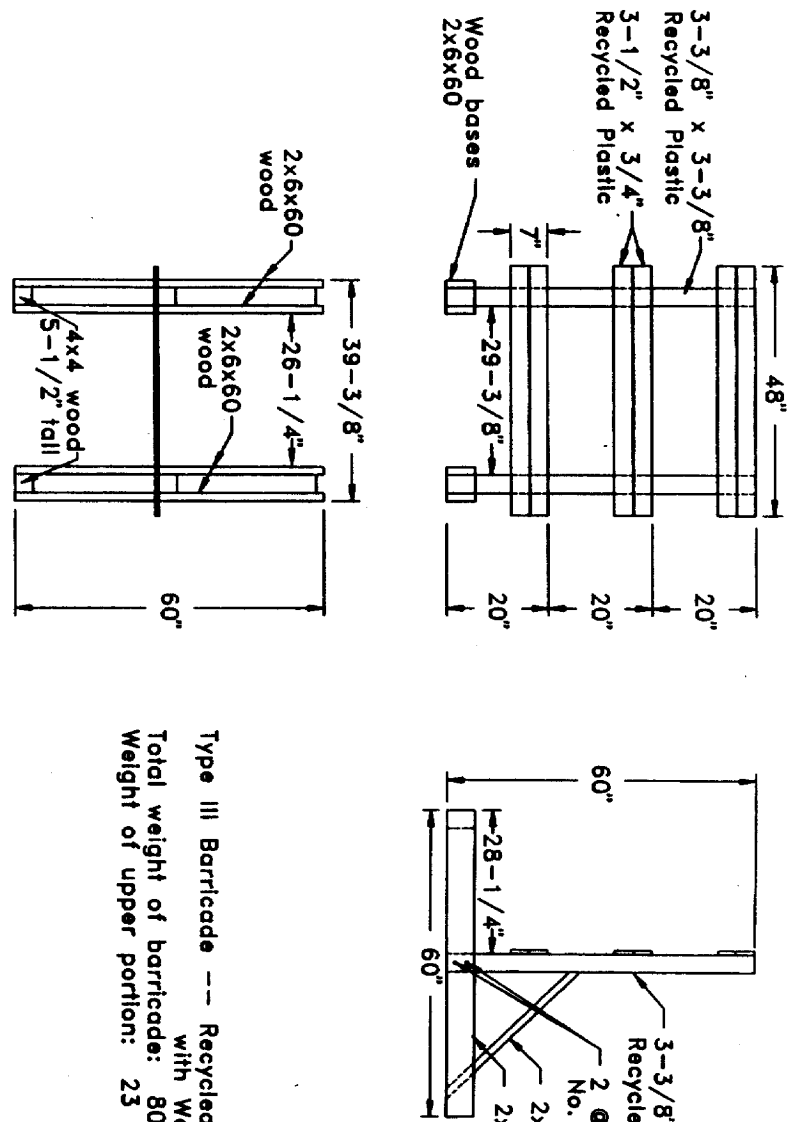

Type III Barricade -- Recycled Plastic Upright with Wood Bases
Total weight of barricade: 80 lb
Weight of upper portion: 23 lb

Figure 61. Schematic of Type III Barricade Fabricated from Hollow Core Recycled Plastic Material with Wooden Base (Test No. 453790-4)

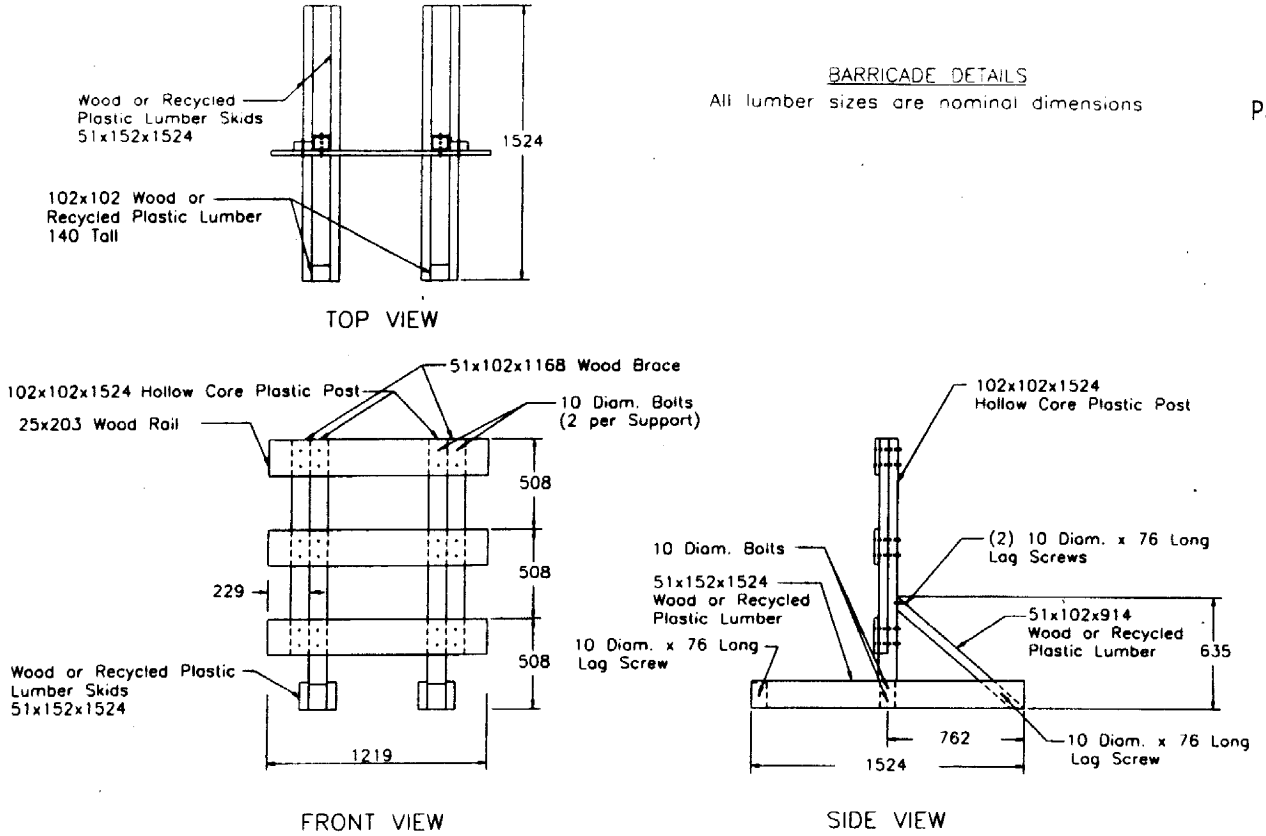

Figure 1. Type III Hollow Core Plastic Barricade as Used in Test 439107-1.

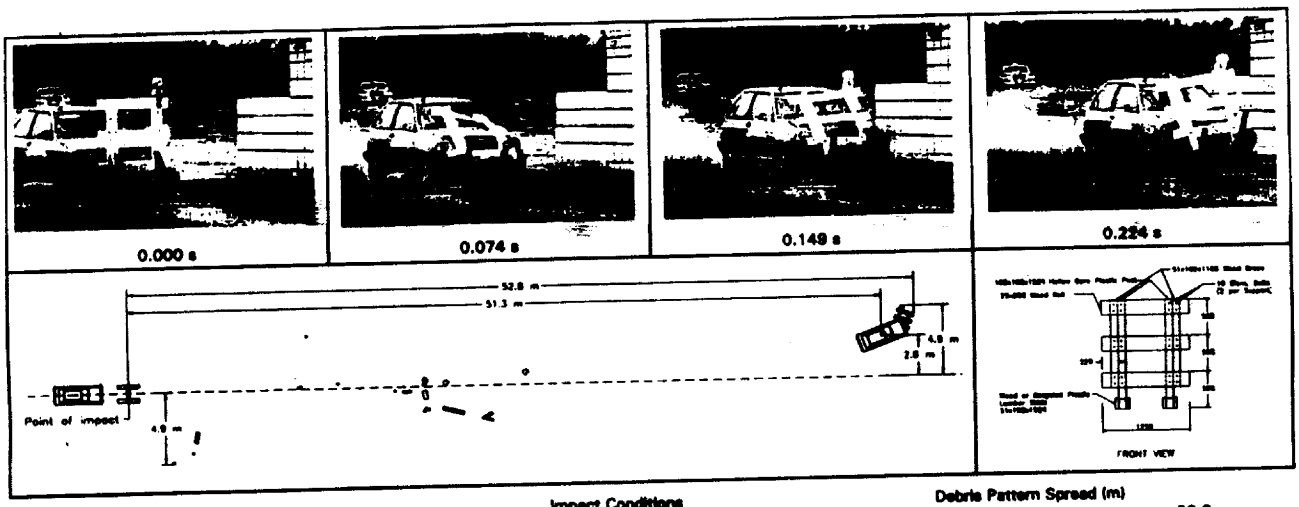

General Information
- Test Agency ..... Texas Transportation Institute
- Test No. 439107-1
- Date 04/09/97

Test Article
- Type ..... Traffic Control Device
- Name ..... Type III Barricade
- Installation Length (m) 1.22
- Size and/or dimension and material of key elements ..... Hollow core plastic supports w/recycled plastic lumber base

Soil Type and Condition ..... Standard soil, wet

Test Vehicle
- Type ..... Production
- Designation 820C
- Model ..... 1990 Ford Festiva
- Mass (kg) Curb 834
  - Test Inertial 820
  - Dummy 76
  - Gross Static 896

Impact Conditions
- Speed (km/h) 99.48
- Angle (deg) 0

Exit Conditions
- Speed (km/h) 83.56
- Angle (deg) 0

Occupant Risk Values
- Impact Velocity (m/s)
  - x-direction ..... N/A
  - y-direction ..... N/A
- Ridedown Accelerations (g's)
  - x-direction ..... N/A
  - y-direction ..... N/A
- Max. 0.050-s Average (g's)
  - x-direction ..... N/A
  - y-direction ..... N/A
  - z-direction ..... N/A

Debris Pattern Spread (m)
- Longitudinal 52.8
- Lateral 4.9

Vehicle Damage
- Exterior
  - VDS 12FD1
  - CDC 12FDEW1
- Maximum Exterior Vehicle Crush (mm) .... nil
- Interior
  - OCDI FS0000000
- Max. Occ. Compart. Deformation (mm) 0

Post-Impact Behavior (during 1.0 s after impact)
- Max. Roll Angle (deg) .... N/A
- Max. Pitch Angle (deg) .... N/A
- Max. Yaw Angle (deg) .... N/A

Figure 17. Summary of Results for Test 439107-1.

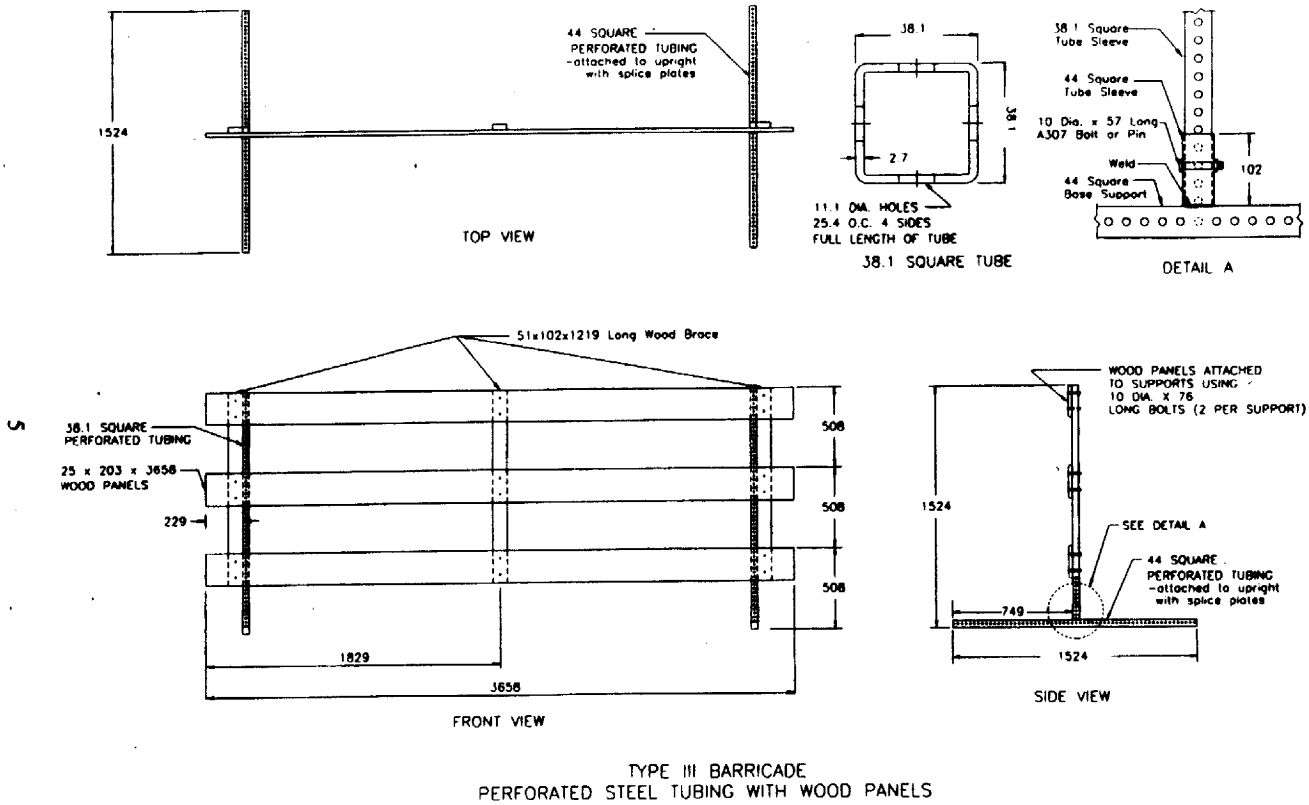

Figure 2. Type III Steel Perforated Tubing Barricade (3.7 m) as Used in Test 439107-2.

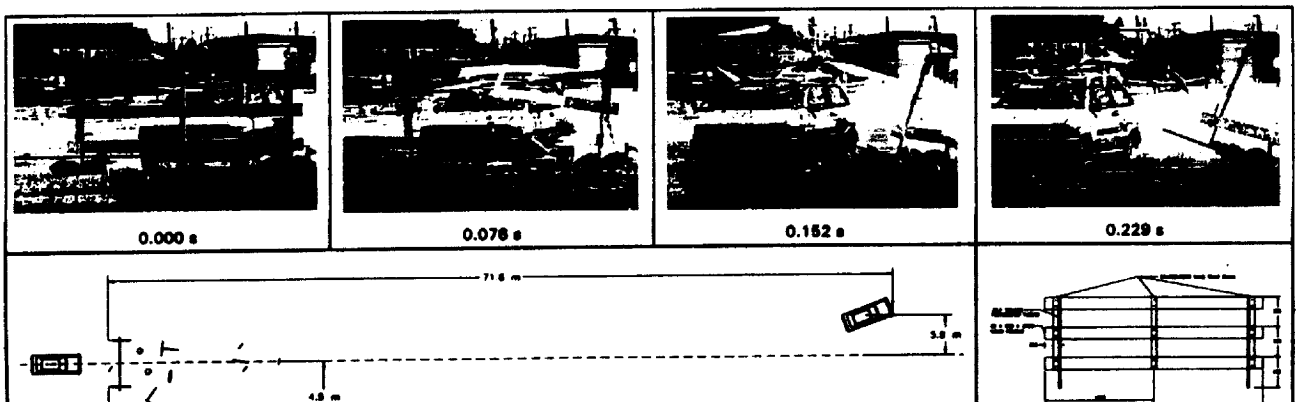

General Information
- Test Agency ..... Texas Transportation Institute
- Test No. 439107-2
- Date 04/09/97

Test Article
- Type ..... Traffic Control Device
- Name ..... Type III Barricade
- Installation Length (m) 3.66
- Size and/or dimension and material of key elements ..... 44 mm square perforated steel support w/wood element

Soil Type and Condition ..... Standard soil, wet

Test Vehicle
- Type ..... Production
- Designation 820C
- Model ..... 1991 Ford Festiva
- Mass (kg) Curb 838
  - Test Inertial 820
  - Dummy 76
  - Gross Static 896

Impact Conditions
- Speed (km/h) 98.04
- Angle (deg) 0

Exit Conditions
- Speed (km/h) 94.52
- Angle (deg) 0

Occupant Risk Values
- Impact Velocity (m/s)
  - x-direction ..... N/A
  - y-direction ..... N/A
- Ridedown Accelerations (g's)
  - x-direction ..... N/A
  - y-direction ..... N/A
- Max. 0.050-s Average (g's)
  - x-direction ..... N/A
  - y-direction ..... N/A
  - z-direction ..... N/A

Debris Pattern Spread (m)
- Longitudinal 12.2
- Lateral 4.9

Vehicle Damage
- Exterior
  - VDS 12FD1
  - CDC 12FDEW1
- Maximum Exterior Vehicle Crush (mm) .... nil
- Interior
  - OCDI FS0000000
- Max. Occ. Compart. Deformation (mm) 0

Post-Impact Behavior (during 1.0 s after impact)
- Max. Roll Angle (deg) .... N/A
- Max. Pitch Angle (deg) .... N/A
- Max. Yaw Angle (deg) .... N/A

Figure 23. Summary of Results for Test 439107-2.

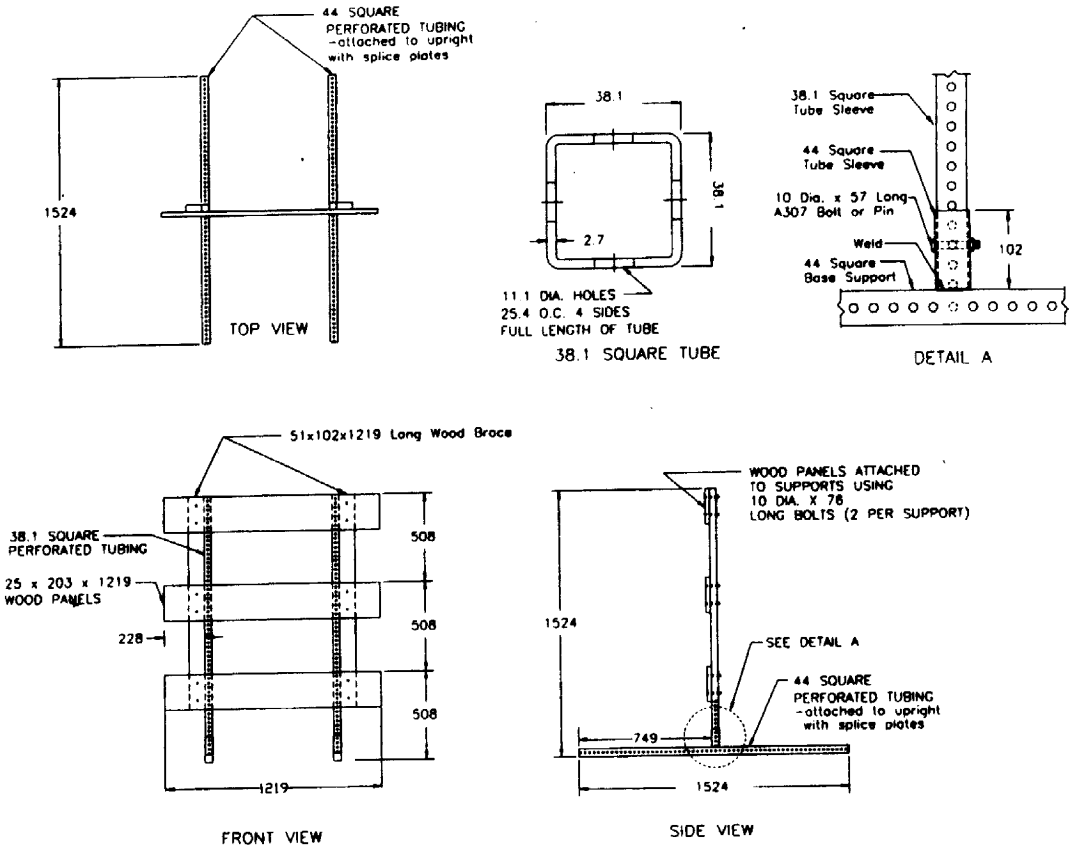

Figure 3. Type III Steel Perforated Tubing Barricade (1.2 m) as Used in Test 439107-3.

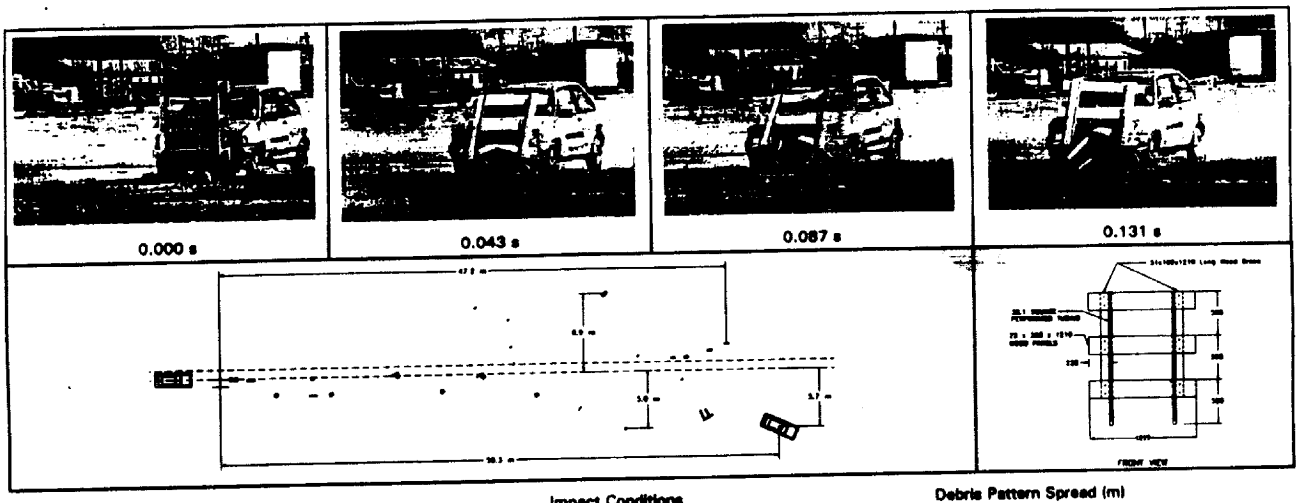

General Information	
Test Agency	Texas Transportation Institute
Test No.	439107-3
Date	04/09/97
Test Article	
Type	Traffic Control Device
Name	Type III Barricade
Installation Length (m)	1.22
Size and/or dimension and material of key elements	44 mm square perforated steel support w/wood element
Soil Type and Condition	Standard soil, wet
Test Vehicle	
Type	Production
Designation	820C
Model	1991 Ford Festiva
Mass (kg) Curb	838
Test Inertial	820
Dummy	76
Gross Static	896

Impact Conditions	
Speed (km/h)	98.06
Angle (deg)	0
Exit Conditions	
Speed (km/h)	89.99
Angle (deg)	0
Occupant Risk Values	
Impact Velocity (m/s)	
x-direction	N/A
y-direction	N/A
Ridedown Accelerations (g's)	
x-direction	N/A
y-direction	N/A
Max. 0.050-s Average (g's)	
x-direction	N/A
y-direction	N/A
z-direction	N/A

Debris Pattern Spread (m)	
Longitudinal	47.2
Lateral	6.9
Vehicle Damage	
Exterior	
VDS	12FD1
CDC	12FDEW1
Maximum Exterior Vehicle Crush (mm)	nil
Interior	
OCDI	FS0000000
Max. Occ. Compart. Deformation (mm)	0
Post-Impact Behavior (during 1.0 s after impact)	
Max. Roll Angle (deg)	N/A
Max. Pitch Angle (deg)	N/A
Max. Yaw Angle (deg)	N/A

Figure 29. Summary of Results for Test 439107-3.

DRAFT
DRAFT

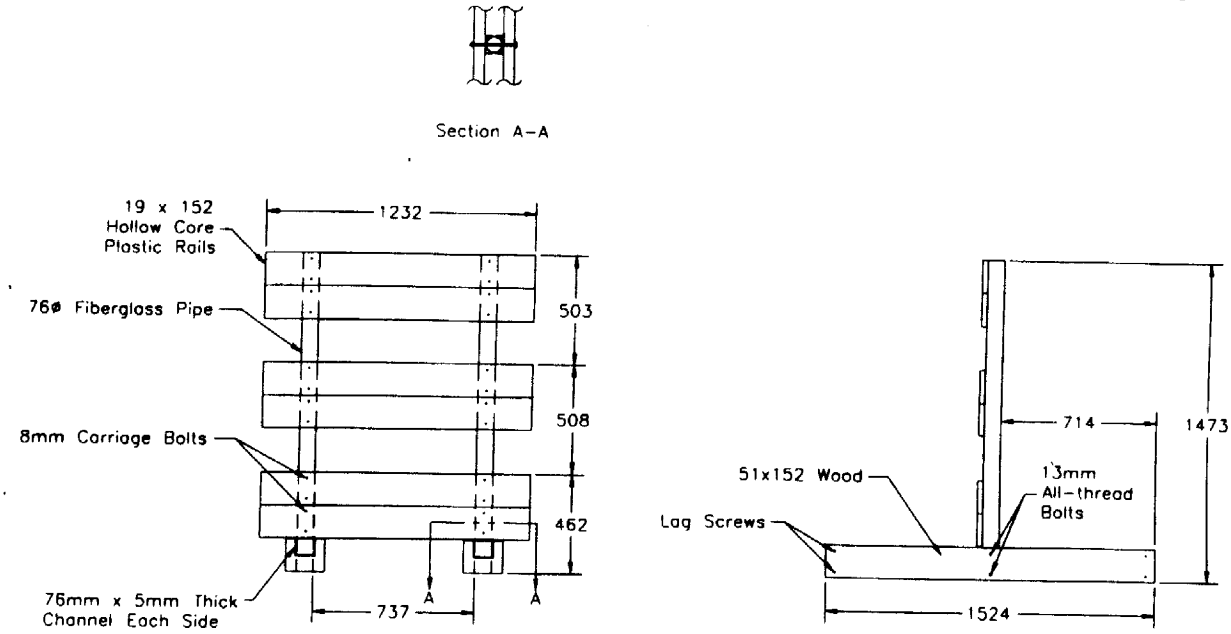

Figure 4. Hycom Fiberglass Type III Barricade (Test 439107-5).

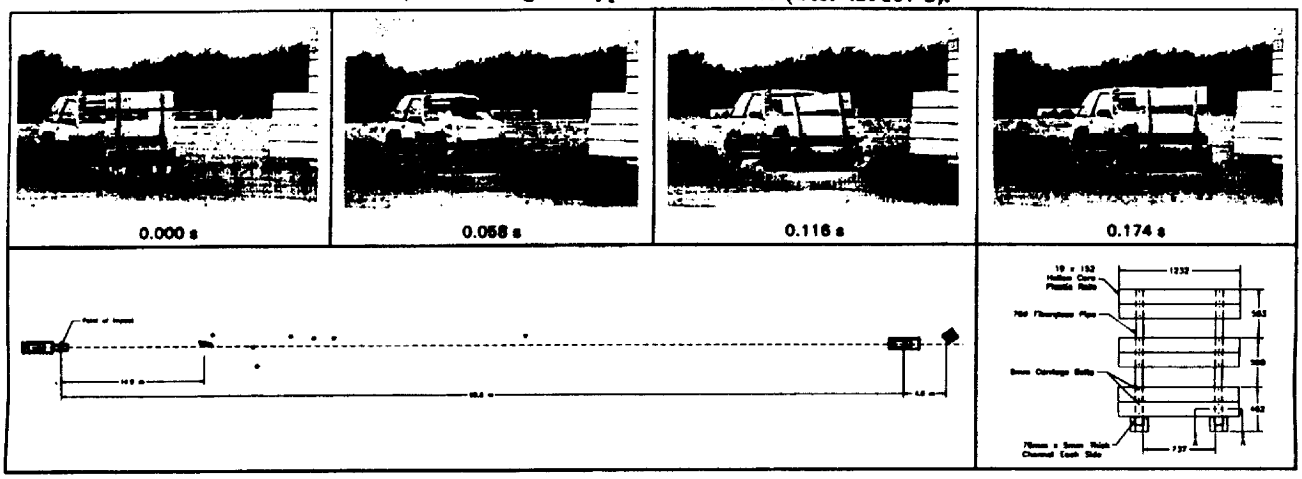

General Information
- Test Agency ..... Texas Transportation Institute
- Test No. 439107-5
- Date 04/10/97

Test Article
- Type ..... Traffic Control Device
- Name ..... Type III Barricade
- Installation Length (m) 1.23
- Size and/or dimension and material of key elements ..... Fiberglass support with wood base

Soil Type and Condition ..... Concrete Pavement, dry

Test Vehicle
- Type ..... Production
- Designation 820C
- Model ..... 1991 Ford Festiva
- Mass (kg) Curb 838
  - Test Inertial 820
  - Dummy 76
  - Gross Static 896

Impact Conditions
- Speed (km/h) 97.63
- Angle (deg) 0

Exit Conditions
- Speed (km/h) 84.65
- Angle (deg) 0

Occupant Risk Values
- Impact Velocity (m/s)
  - x-direction ..... N/A
  - y-direction ..... N/A
- Ridedown Accelerations (g's)
  - x-direction ..... N/A
  - y-direction ..... N/A
- Max. 0.050-s Average (g's)
  - x-direction ..... N/A
  - y-direction ..... N/A
  - z-direction ..... N/A

Debris Pattern Spread (m)
- Longitudinal 95.2
- Lateral 1.0

Vehicle Damage
- Exterior
  - VDS 12FD1
  - CDC 12FDEW1
- Maximum Exterior Vehicle Crush (mm) .... nil
- Interior
  - OCDI FS0000000
- Max. Occ. Compart. Deformation (mm) 0

Post-Impact Behavior (during 1.0 s after impact)
- Max. Roll Angle (deg) .... N/A
- Max. Pitch Angle (deg) .... N/A
- Max. Yaw Angle (deg) .... N/A

Figure 35. Summary of Results for Test 439107-5.

DRAFT

DRAFT

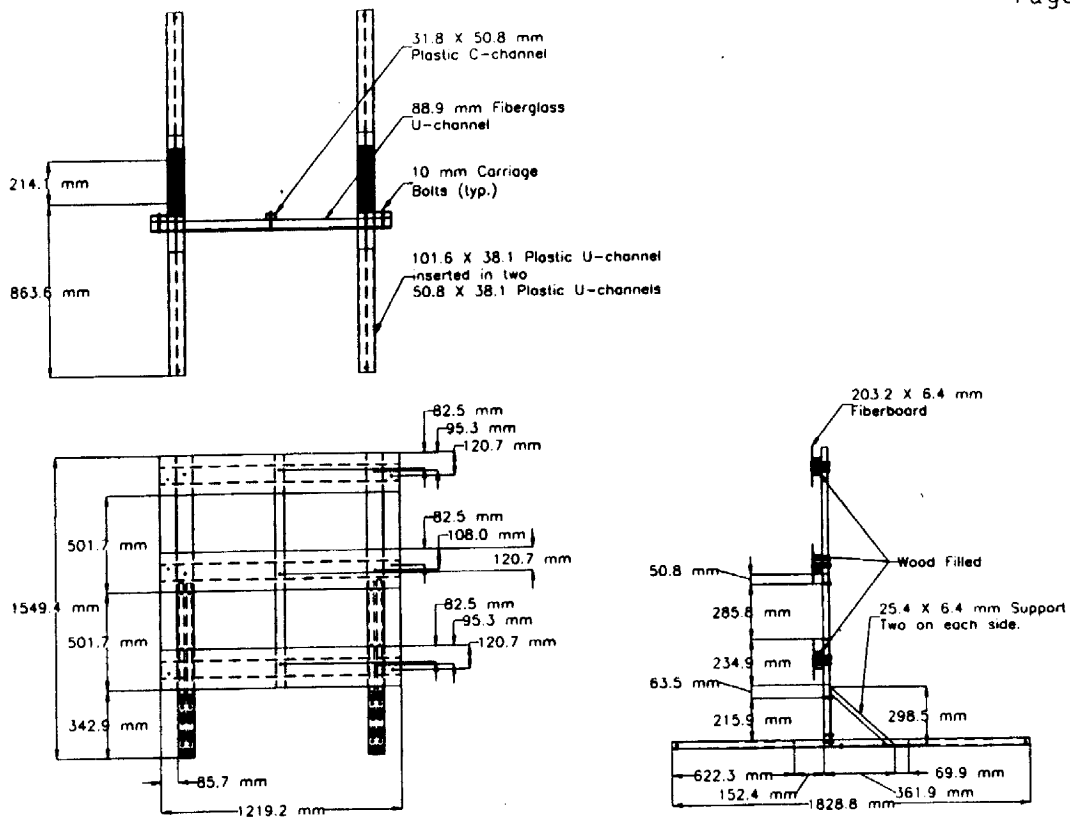

Figure 5. Price Fiberglass Type III Barricade (Test 439107-12).

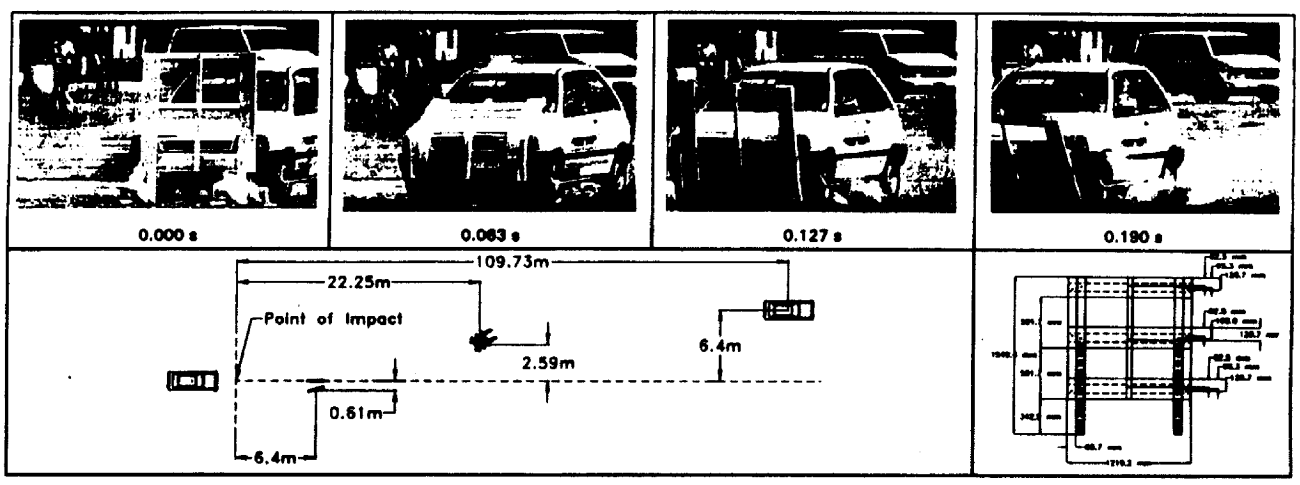

General Information		**Impact Conditions**		**Debris Pattern Spread (m)**	
Test Agency	Texas Transportation Institute	Speed (km/h)	100.50	Longitudinal	22.3
Test No.	439107-12	Angle (deg)	0	Lateral	2.6
Date	06/03/97				
Test Article		**Exit Conditions**		**Vehicle Damage**	
Type	Traffic Control Device	Speed (km/h)	88.46	Exterior	
Name	Type III Barricade	Angle (deg)	0	VDS	12FD1
Installation Length (m)	1.22			CDC	12FDEW1
Size and/or dimension		**Occupant Risk Values**		Maximum Exterior	
and material of key	Recycled plastic U-channel	Impact Velocity (m/s)		Vehicle Crush (mm)	nil
elements	with fiberglass panels	x-direction	N/A	Interior	
Soil Type and Condition	Standard soil, dry	y-direction	N/A	OCDI	FS0000000
Test Vehicle		Ridedown Accelerations (g's)		Max. Occ. Compart.	
Type	Production	x-direction	N/A	Deformation (mm)	0
Designation	820C	y-direction	N/A		
Model	1990 Ford Festiva	Max. 0.050-s Average (g's)		**Post-Impact Behavior**	
Mass (kg) Curb	828	x-direction	N/A	(during 1.0 s after impact)	
Test Inertial	820	y-direction	N/A	Max. Roll Angle (deg)	N/A
Dummy	76	z-direction	N/A	Max. Pitch Angle (deg)	N/A
Gross Static	896			Max. Yaw Angle (deg)	N/A

Figure 41. Summary of Results for Test 439107-12.

DRAFT
DRAFT

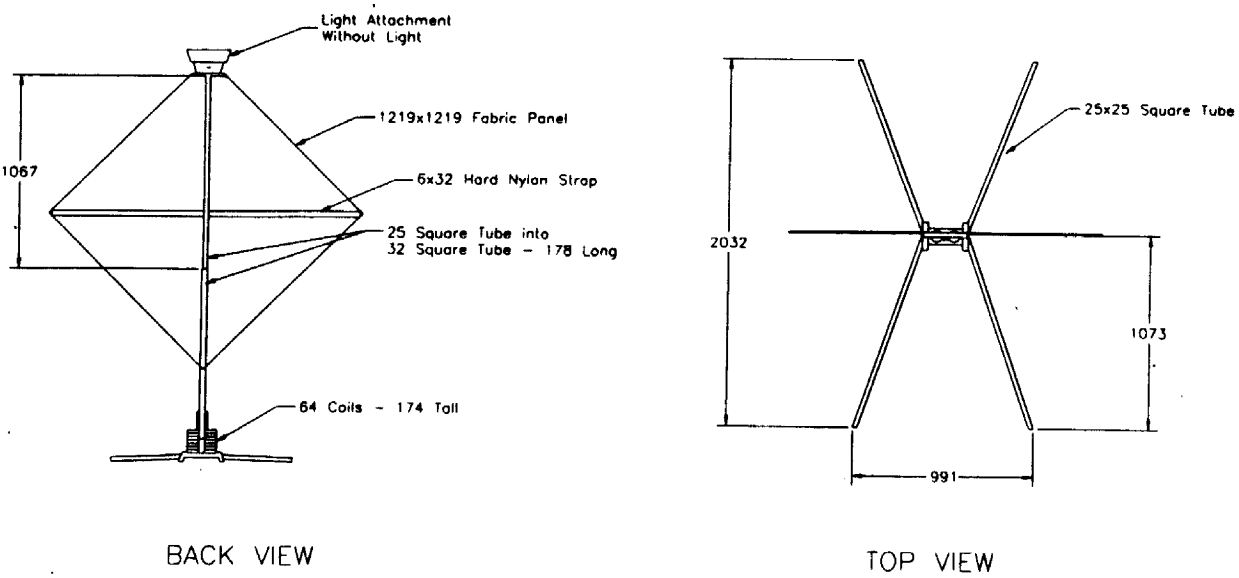

Figure 7. Spring-loaded Portable Sign Support (Test 439107-6).

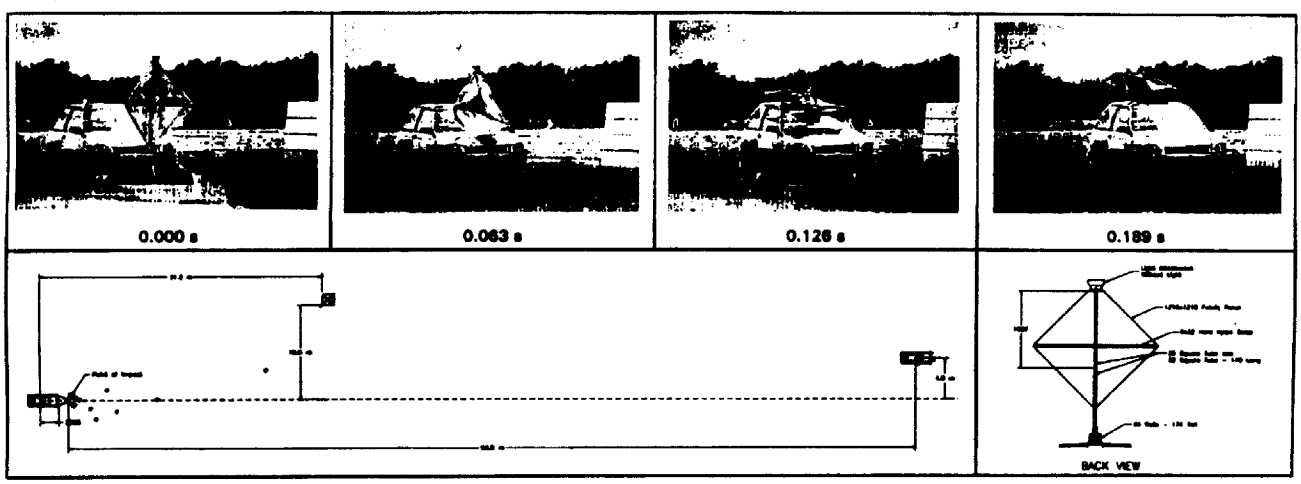

General Information
- Test Agency ..... Texas Transportation Institute
- Test No. 439107-6
- Date 04/10/97

Test Article
- Type ..... Traffic Control Device
- Name ..... Spring-loaded Portable Sign
- Installation Length (m) 2.03
- Size and/or dimension and material of key elements ..... 25x25 mm square tube support with fabric sign panel

Soil Type and Condition ..... Concrete Pavement, dry

Test Vehicle
- Type ..... Production
- Designation 820C
- Model ..... 1991 Ford Festiva
- Mass (kg) Curb 838
  - Test Inertial 820
  - Dummy 76
  - Gross Static 896

Impact Conditions
- Speed (km/h) 99.09
- Angle (deg) 0

Exit Conditions
- Speed (km/h) 92.35
- Angle (deg) 0

Occupant Risk Values
- Impact Velocity (m/s)
  - x-direction ..... N/A
  - y-direction ..... N/A
- Ridedown Accelerations (g's)
  - x-direction ..... N/A
  - y-direction ..... N/A
- Max. 0.050-s Average (g's)
  - x-direction ..... N/A
  - y-direction ..... N/A
  - z-direction ..... N/A

Debris Pattern Spread (m)
- Longitudinal 93.9
- Lateral 10.6

Vehicle Damage
- Exterior
  - VDS 12FD1
  - CDC 12FDEW1
- Maximum Exterior Vehicle Crush (mm) .... nil
- Interior
  - OCDI FS0000000
- Max. Occ. Compart. Deformation (mm) 0

Post-Impact Behavior (during 1.0 s after impact)
- Max. Roll Angle (deg) .... N/A
- Max. Pitch Angle (deg) .... N/A
- Max. Yaw Angle (deg) .... N/A

Figure 52. Summary of Results for Test 439107-6.

DRAFT
DRAFT

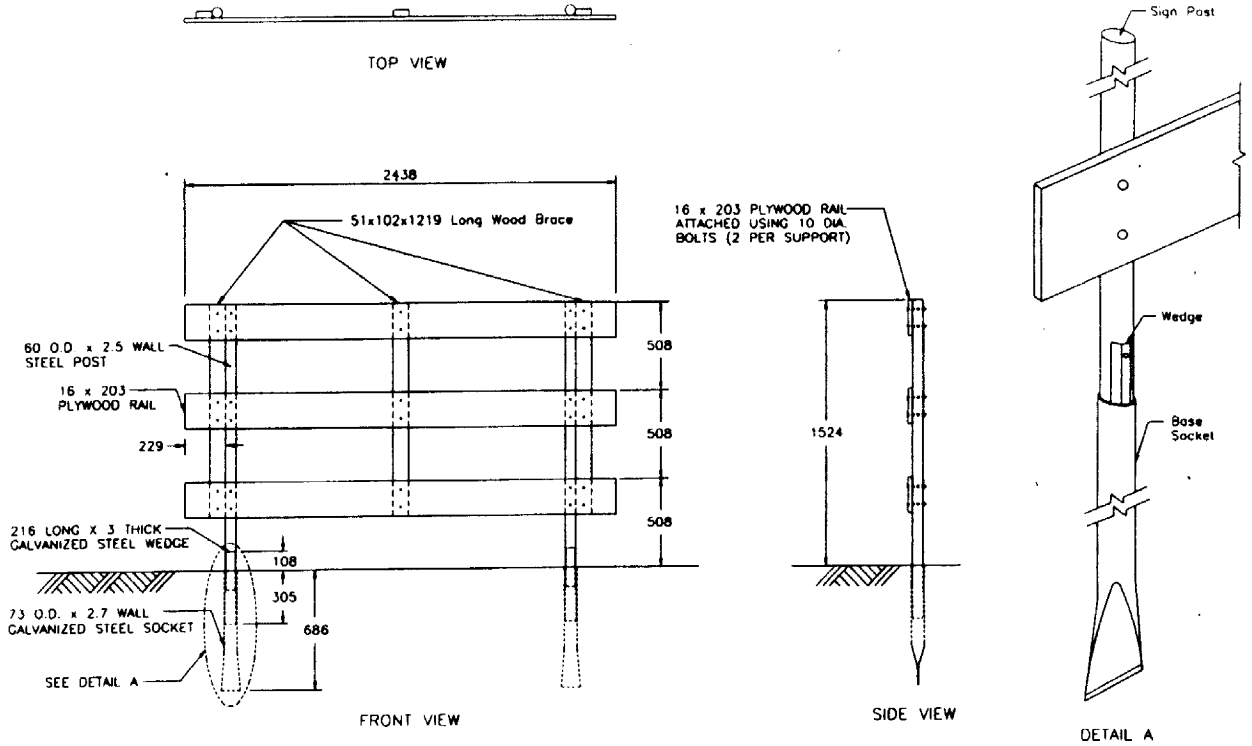

TYPE III GROUND MOUNT BARRICADE WITH POS-LOC SUPPORT

Figure 8. Ground-mounted Type III Barricade (Test 439107-7).

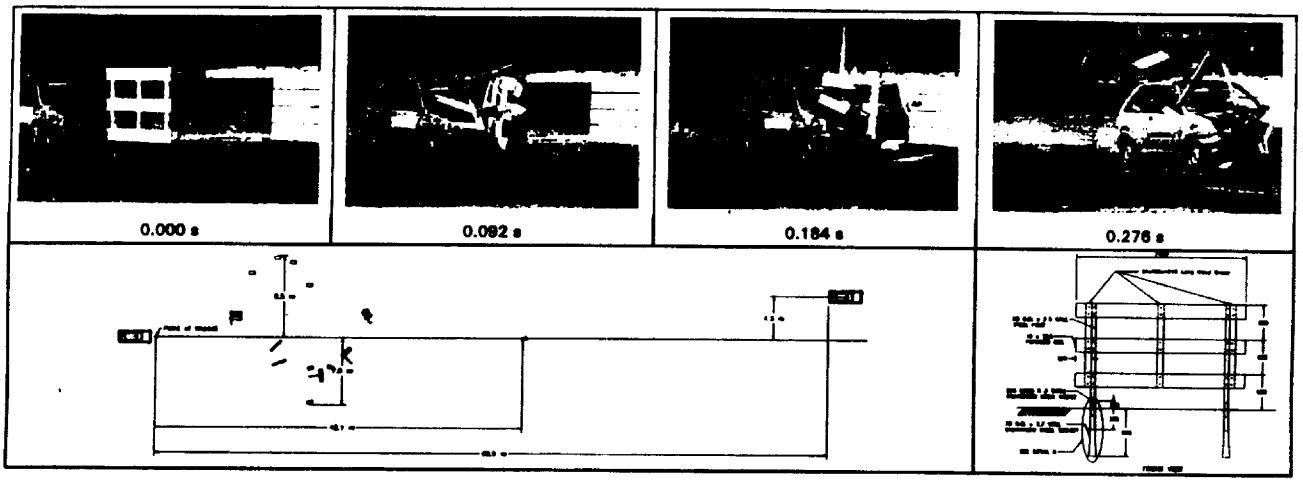

General Information
- Test Agency ..... Texas Transportation Institute
- Test No. 439107-7
- Date 04/17/97

Test Article
- Type ..... Traffic Control Device
- Name ..... Ground-mounted Type III Barricade
- Installation Length (m) 2.44
- Size and/or dimension and material of key elements ..... 51x102 mm wooden support with 16x102 mm elements

Soil Type and Condition ..... Standard soil, dry

Test Vehicle
- Type ..... Production
- Designation 820C
- Model ..... 1991 Ford Festiva
- Mass (kg) Curb 838
  - Test Inertial 820
  - Dummy 76
  - Gross Static 896

Impact Conditions
- Speed (km/h) 98.95
- Angle (deg) 0

Exit Conditions
- Speed (km/h) 86.59
- Angle (deg) 0

Occupant Risk Values
- Impact Velocity (m/s)
  - x-direction ..... N/A
  - y-direction ..... N/A
- Ridedown Accelerations (g's)
  - x-direction ..... N/A
  - y-direction ..... N/A
- Max. 0.050-s Average (g's)
  - x-direction ..... N/A
  - y-direction ..... N/A
  - z-direction ..... N/A

Debris Pattern Spread (m)
- Longitudinal 42.1
- Lateral 8.5

Vehicle Damage
- Exterior
  - VDS 12FD1
  - CDC 12FDEW1
- Maximum Exterior Vehicle Crush (mm) .... nil
- Interior
  - OCDI FS0000000
- Max. Occ. Compart. Deformation (mm) 0

Post-Impact Behavior (during 1.0 s after impact)
- Max. Roll Angle (deg) .... N/A
- Max. Pitch Angle (deg) .... N/A
- Max. Yaw Angle (deg) .... N/A

Figure 58. Summary of Results for Test 439107-7.

DRAFT
DRAFT

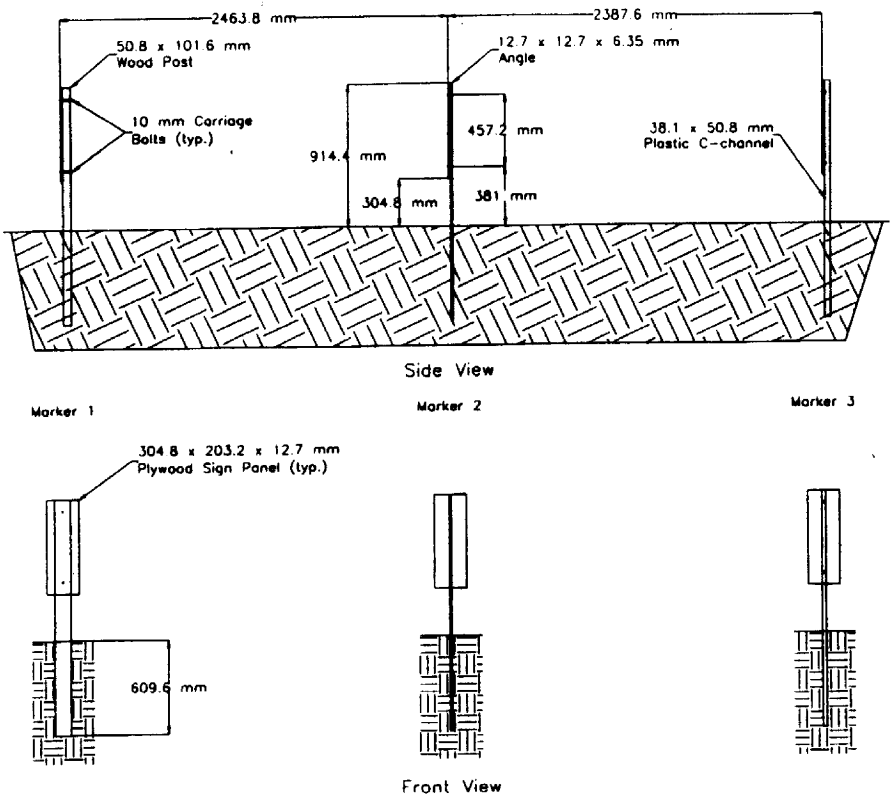

Figure 11. Vertical Panel Assembly (Test 439107-11).

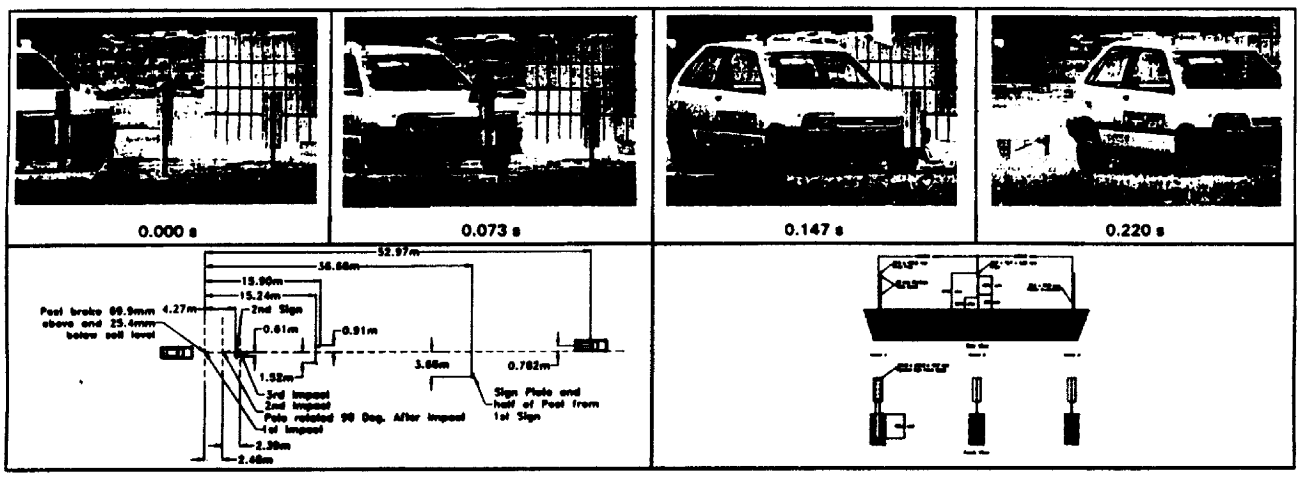

General Information
- Test Agency ..... Texas Transportation Institute
- Test No. 439107-11
- Date 06/03/97

Test Article
- Type ..... Traffic Control Device
- Name ..... Delineators
- Installation Height (m) 0.91
- Size and/or dimension and material of key elements .....

Soil Type and Condition ..... Standard soil, dry

Test Vehicle
- Type ..... Production
- Designation 820C
- Model ..... 1990 Ford Festiva
- Mass (kg) Curb 828
  - Test Inertial 820
  - Dummy 76
  - Gross Static 896

Impact Conditions
- Speed (km/h) 99.52
- Angle (deg) 0

Exit Conditions
- Speed (km/h) 92.50
- Angle (deg) 0

Occupant Risk Values
- Impact Velocity (m/s)
  - x-direction ..... N/A
  - y-direction ..... N/A
- Ridedown Accelerations (g's)
  - x-direction ..... N/A
  - y-direction ..... N/A
- Max. 0.050-s Average (g's)
  - x-direction ..... N/A
  - y-direction ..... N/A
  - z-direction ..... N/A

Debris Pattern Spread (m)
- Longitudinal 36.7
- Lateral 1.5

Vehicle Damage
- Exterior
  - VDS 12FC1
  - CDC 12FCEW1
- Maximum Exterior Vehicle Crush (mm) .... nil
- Interior
  - OCDI FS0000000
- Max. Occ. Compart. Deformation (mm) 0

Post-Impact Behavior (during 1.0 s after impact)
- Max. Roll Angle (deg) .... N/A
- Max. Pitch Angle (deg) .... N/A
- Max. Yaw Angle (deg) .... N/A

Figure 81. Summary of Results for Test 439107-11.

DRAFT
DRAFT

DRAFT

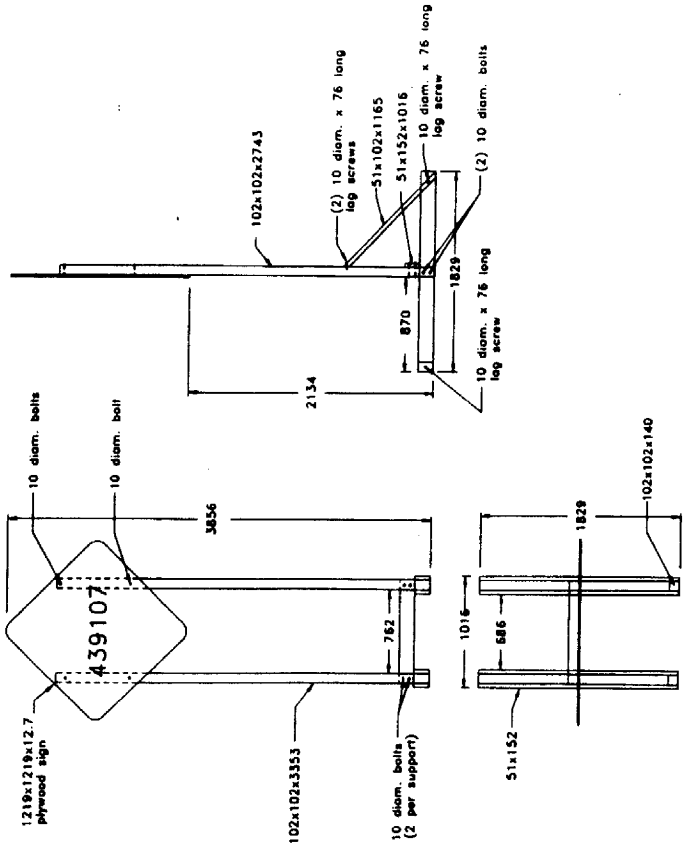

Figure 10. Skid-mounted Sign Support (Test 439107-10).

16

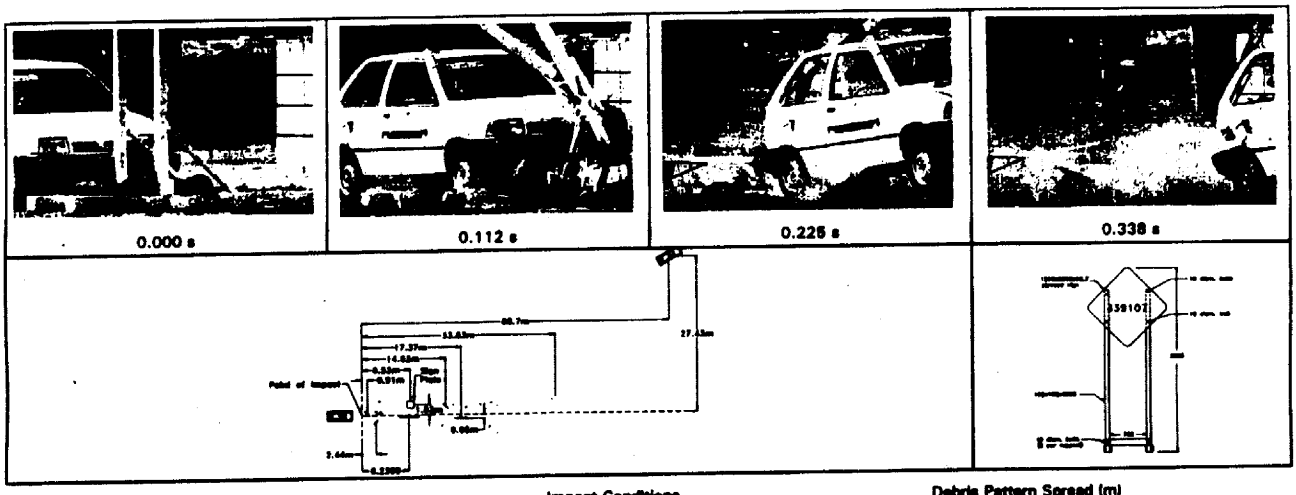

General Information	
Test Agency	Texas Transportation Institute
Test No.	439107-10
Date	06/03/97
Test Article	
Type	Traffic Control Device
Name	Skid-mounted barricade
Installation Length (m)	1.02
Size and/or dimension and material of key elements	102x102x3353 m tall wooden support w/1219x1219x13 sign
Soil Type and Condition	Standard soil, dry
Test Vehicle	
Type	Production
Designation	820C
Model	1992 Ford Festiva
Mass (kg) Curb	805
Test Inertial	820
Dummy	76
Gross Static	896

Impact Conditions	
Speed (km/h)	99.23
Angle (deg)	0
Exit Conditions	
Speed (km/h)	84.79
Angle (deg)	0
Occupant Risk Values	
Impact Velocity (m/s)	
x-direction	N/A
y-direction	N/A
Ridedown Accelerations (g's)	
x-direction	N/A
y-direction	N/A
Max. 0.050-s Average (g's)	
x-direction	N/A
y-direction	N/A
z-direction	N/A

Debris Pattern Spread (m)	
Longitudinal	33.8
Lateral	1.8
Vehicle Damage	
Exterior	
VDS	12FD2
CDC	12FDEW2
Maximum Exterior Vehicle Crush (mm)	55
Interior	
OCDI	LR0100000
Max. Occ. Compart. Deformation (mm)	35
Post-Impact Behavior (during 1.0 s after impact)	
Max. Roll Angle (deg)	N/A
Max. Pitch Angle (deg)	N/A
Max. Yaw Angle (deg)	N/A

Figure 76. Summary of Results for Test 439107-10.

DRAFT

Specifications

"AIR SPILL" BARRICADE

MODEL # :	DSTA MRQB	DSTA MRB
Description:	Flexible reflective panel, post, rubber base with quick release bracket and ballast plate	Flexible reflective panel, post, rubber base with clamping bracket and ballast plate
Base:	Width 12" (30.48 cm) X Length 18" (45.72 cm)	
Panel:	Width 8" (20.32 cm) thru 12" (30.48 cm) Height 24" (60.96 cm) thru 36" (91.44 cm)	
Post:	1 3/4" (4.45 cm) X 46" (116.84 cm)	
Weight:	23 lbs (10.45 kg)	23 lbs (10.45 kg)

Options:

Additional steel ballast plate - 6" (15.24 cm) X 15-1/2" (39.37 cm) X 3/8" (.95 cm) Weight: 12 lbs. (5.45 kg)

Barricade can be ordered with a metal base that increases the weight of the unit to 32 lbs. (14.55 kg)

A type "A," - "B," - or "C" flashing light can be mounted on both rubber base models.

WHAT THEY'RE SAYING ABOUT THE "AIR SPILL" BARRICADE

"On our recently completed contract, we substituted vertical panels for plastic drums and everyone was very pleased with their performance. Some of the advantages are: enhancing construction schedule due to ease of placing. If hit by a vehicle, they do not go careening into traffic or the work area... they can be repaired...they occupy smaller footprint or space thus allowing larger work area and patron driving area."
General Contractor

"This device performed very satisfactorily: provided a clear message to the motoring public. If struck, panels cause little damage to the vehicle: they are flattened, not launched into the work zone like a barrel often is..."
State DOT

"We would not have been able to complete the job as quickly without the "Air Spill" barricades."
Road Builder

"Air Spills were used exclusively for traffic control with phenomenal success considering the conditions encountered. Traffic control at ramps with interchanges so close to each other presented special problems. Air Spills showed an added advantage over barrels in that their diagonal stripes give the added advantage of removing the doubt as to which direction they should drive on."
Consulting Engineers

"Field research reveals that 12" x 24" vertical panels are more visible – day or night – than plastic drums."
Program Report 236 (NCHRP)
National Cooperative Highway Research Program

TO ORDER...FOR PRICING...FOR MORE INFORMATION
CALL TOLL FREE
1-800-451-9636
or (716) 681-3000
FAX 716-681-1188

Distributed by:

FLASHER HANDLING CORP.
125 Taylor Drive • Depew, NY 14043-2014

U.S. Patent No. 4,798,017 · Foreign Patent 1303433 U.S. Patent D-331605

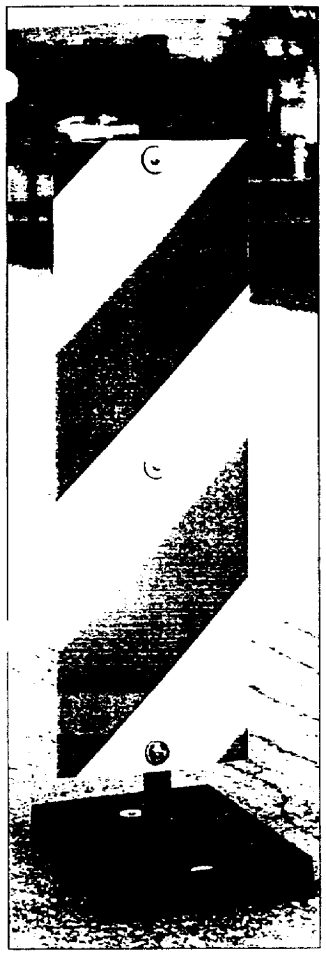

U.S. Patent No. 4,798,017 · Foreign Patent 1303433
U.S. Patent D-331605

Flasher Handling's "AIR SPILL" BARRICADES

NOW IN USE IN 31 STATES, PUERTO RICO AND CANADA

Work Faster and Smarter!

"Air Spill" barricades get more protection and safety on the job faster because they're so easy to handle. "Air Spill" units can be loaded off or on to trucks by one man. Most important, they are so stable no sandbagging is necessary when the units are ordered with ballast plates.

The reflective panel and post are held firmly in place by a unique, patented quick release bracket that is operated by a foot pedal. The bracket locks or releases the vertical panel instantly.

The "air spilling" action of the flexible panel and the rubber base with its bolted ballast plates keep the "Air Spill" barricade upright in winds up to 55 mph. If struck by a vehicle, the panel releases from the bracket and flutters to the ground harmlessly. It does not become a road hazard as often is the case with a barrel or drum.

"Air Spill" barricades direct traffic positively day and night. They take up much less roadway than barrels and drums and they don't require sandbagging.

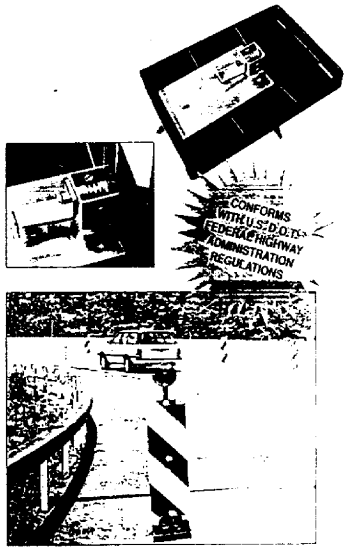

TO ORDER...FOR PRICING...FOR MORE INFORMATION
CALL TOLL FREE
1-800-451-9636
or (716) 681-3000
FAX 716-681-1188

FLASHER HANDLING CORP.
125 Taylor Drive • Depew, NY 14043-2014

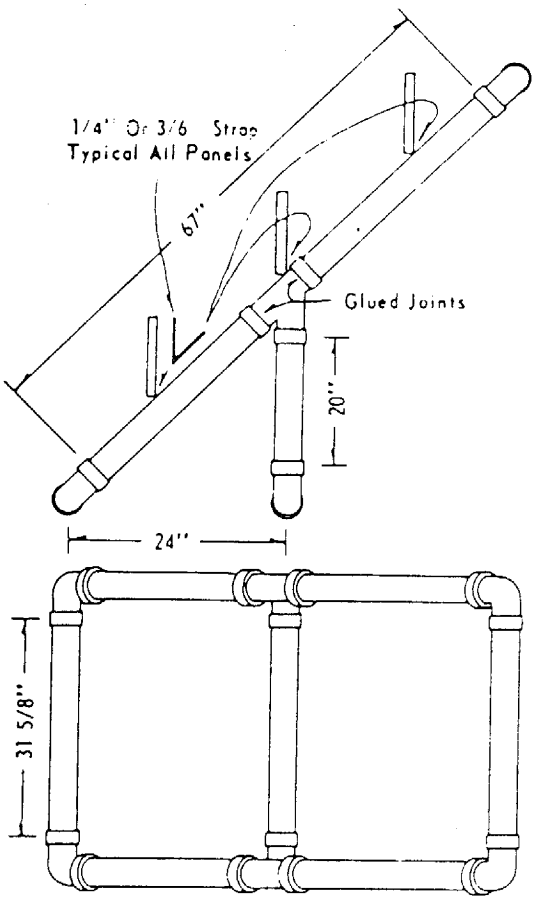

MATERIALS:

25' - 3" PVC CONDUIT
5 - 3" PVC 90 DEGREE ELBOWS
2 - 3" PVC WYES
3 - 9" x 48" x .025 ANODIZED ALUMINUM FACE PANELS
6 - 1/4 OR 3/6" 90 DEGREE PANEL MOUNTS
12 - 1/2" NO. 14 METAL SCREWS
4 - 3" STANDARD FIRE EXTINGUISHER CLIPS
4 - 3" CONCRETE ANCHOR BOLTS

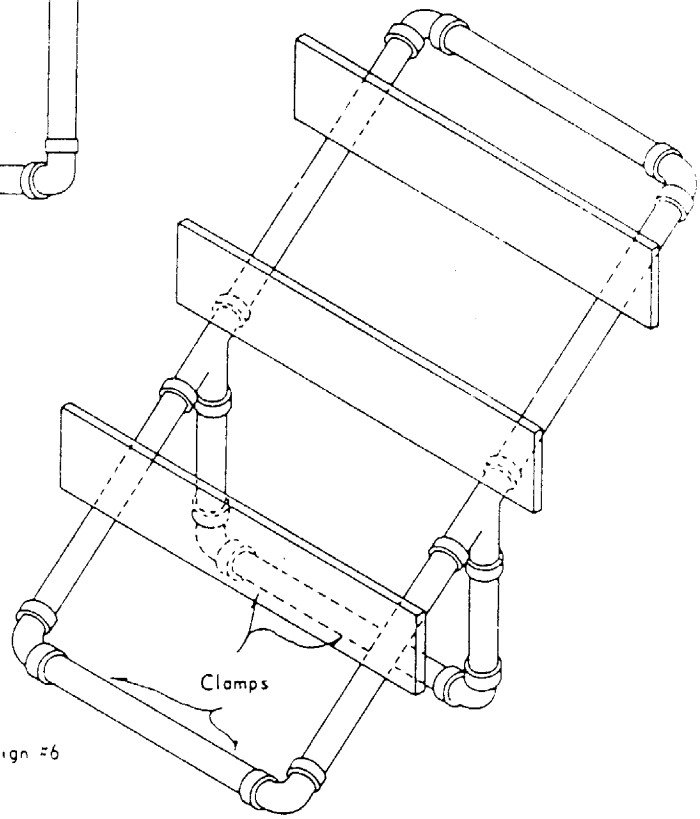

Note: Dimensions Are Approximate.

Design #6

MATERIALS

20' - 3" PVC CONDUIT
4 - 3" PVC 90 DEGREE ELBOWS
4 - 3" PVC WYES
3 - 9" x 48" x .025 ANODIZED ALUMINUM FACE PANELS
6 - 1/4" OR 3/16" 90 DEGREE PANEL MOUNT
12 - 1/2" NO. 14 METAL SCREWS
2 - 3" STANDARD FIRE EXTINGUISHER CLIPS
2 - 3" CONCRETE ANCHOR BOLTS

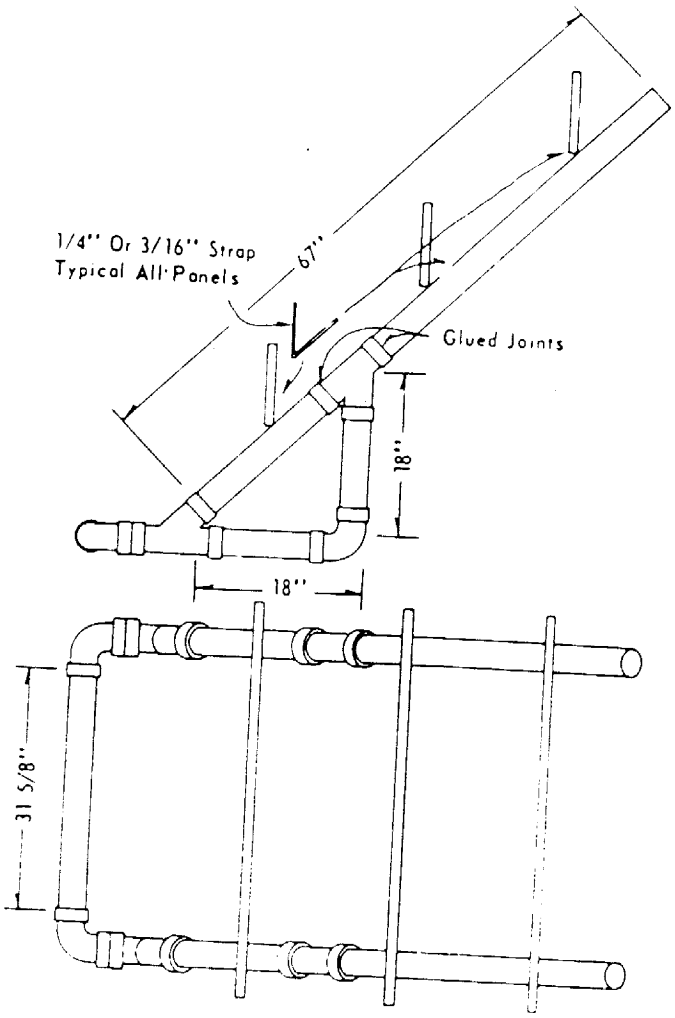

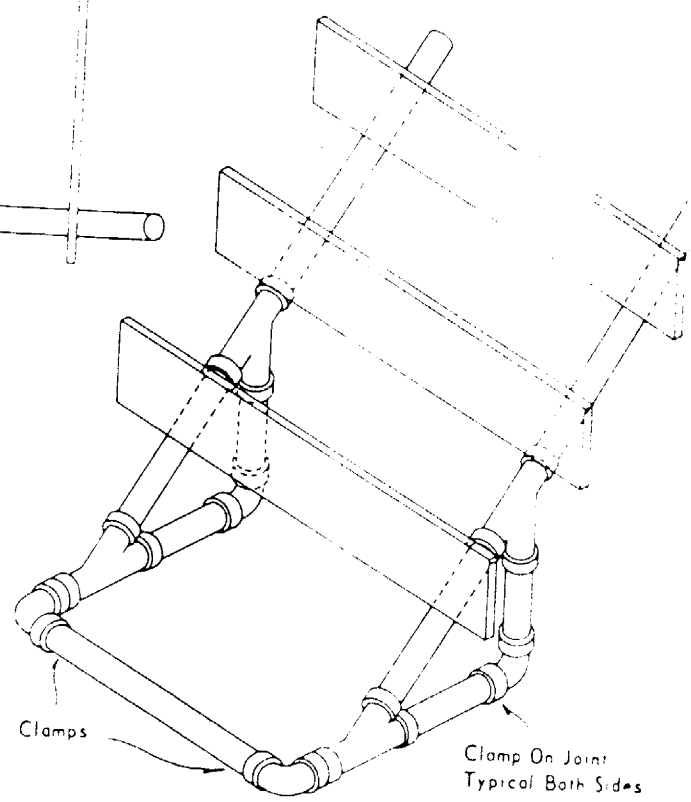

Note: Dimensions Are Approximate.

Design #7

Attachment A, TABLE III.1.A
ACCEPTABLE CRASHWORTHY CATEGORY 3 HARDWARE (Truck-mounted Attenuators and Traffic Barriers)

Acceptance Letter # And Date	Manufacturer, Developer, Agency, etc.	Device(s)
Truck Mounted Attenuators		
FHWA CC-30 7/13/95	**Connecticut DoT**	TL-2 Connecticut TMA
FHWA CC-32 3/19/96 **FHWA CC-39** 4/24/97	**Energy Absorption Systems, Inc.**	TL-2, ALPHA 70 TMA TL-3, ALPHA 100K TMA , (modified)
FHWA CC-34 6/12/96 **FHWA CC-34A** 10/30/96	**Trinity Industries / Syro Steel**	TL-2, MPS 350 TMA TL-3 MPS 350 TMA
FHWA CC-36 8/27/96 **FHWA CC-36A** 6/17/97	**Vanderbilt University**	TL-2, Vanderbilt TMA TL-3, Vanderbilt TMA
Crash Cushions		
FHWA CC-25 2/10/95	**Energy Absorption Systems, Inc**	TL-2, NEAT Non-redirecting crash cushion
FHWA CC-29 6/28/95		TL-3, ENERGITE III module
FHWA CC-35 6/21/96, **FHWA CC-35A** 10/30/96, **FHWA CC-35B** 10/17/96 **FHWA CC-42** 7/16/97 **FHWA CC-43** 12/01/97 **FHWA CC-45** 3/19/98 **FHWA CC-49** 6/17/98		TL-3, QUADGUARD crash cushion TL-3 QUADGUARD-WIDE system TL-3, QUADGUARD-LOW MAINTENANCE Cartridge (LMC) TL-3, QUADGUARD-WIDE / LOW MAINTENANCE CARTRIDGE TL-3, QUAD-TREND transition end treatment.
FHWA CC-41 6/19/97		BRAKEMASTER terminal/crash cushion
FHWA CC-27 5/1/95		TL-3, WATER TWISTER vehicle arresting system
FHWA CC-26 3/3/95, **FHWA CC-26A** 4/12/95, **FHWA CC-26B** 8/14/95, **FHWA CC-50** 06/16/98	**Roadway Safety Service**	TL-3 REACT 350 crash cushion, (additional letter **FHWA CC-26C** 9/25/95) TL-3 Wide REACT
FHWA CC-26D 12/19/96, **FHWA CC-26E** 6/25/97		TL-3 REACT 350 CZ crash cushion
FHWA CC-28 6/28/95		TL-3, FITCH UNIVERSAL MODULE crash cushion

Attachment A, TABLE III.1.A
ACCEPTABLE CRASHWORTHY CATEGORY 3 HARDWARE (Truck-mounted Attenuators and Traffic Barriers) (Continued)

Acceptance Letter # And Date	Manufacturer, Developer, Agency, etc.	Device(s)
Crash Cushions (Continued)		
FHWA CC-33 5/01/96	**Trinity Industries / Syro Steel**	TL-3, CAT Terminal/Crash Cushion,
FHWA CC-38 3/03/97		TL-3, ADIEM lightweight concrete crash cushion
FHWA CC-44 03/06/98		TL-2, LOW PROFILE BARRIER Sloped End Terminal
FHWA CC-52 07/10/98	**TrafFix Devices**	TL-3 Sand Barrel System
Terminals (To NCHRP Report 350)		
FHWA CC-37 11/20/96, **FHWA CC-37A** 2/19/97, **FHWA CC-37B** 2/19/97, **FHWA CC-37C** 4/01/97	**Interstate Steel / Road Systems Inc.**	TL-3, BEST 350
FHWA CC-40 4/02/97		TL-3, SEQUENTIAL KINKING TERMINAL (SKT-350)
FHWA CC-31 12/4/95 **FHWA CC-51** 06/18/98	**Trinity Industries / Syro Steel**	TL-3, SLOTTED RAIL TERMINALS (SRT) for W-beam Guardrail TL-3, ISRT-3
FHWA CC-46 4/02/98	**Road Systems, Inc.**	TL-3, Flared Energy Absorbing Terminal (FLEAT-350)
FHWA CC-48	**Energy Absorption**	TL-3, Redirecting Gating End Terminal (REGENT)
Crashworthy Longitudinal Barriers (To NCHRP Report 230 OR 350 AS NOTED) (NCHRP 230 WORK ZONE BARRIERS MAY REMAIN IN USE UNTIL OCTOBER 1, 2002.)		
(Generic)	AASHTO Roadside Design Guide Chapter 9	1. Pin and Loop (NCHRP 230) 2. Channel Splice (NCHRP 230) 3. Vertical I-Beam (NCHRP 230) 4. Lapped Joint (NCHRP 230) 5. J-Hook Joint (see B-14 below) (NCHRP 230)
FHWA B-3, 7/15/86	**Barrier Systems, Inc.**	(NCHRP 230), SERIES 200 Construction Zone Barrier (Moveable Concrete Safety Shape)
FHWA B-16, 10/24/91,		(NCHRP 230), QUICKCHANGE Moveable Median Barrier for use in permanent installations
FHWA B-40 8/27/97		TL-3 NARROW QUICKCHANGE Moveable Barrier
FHWA B-14 11/8/90	**Smith-Midland Corp.**	(NCHRP 230), J-HOOK connection for precast concrete median barriers.

Attachment A, TABLE III.1.A
ACCEPTABLE CRASHWORTHY CATEGORY 3 HARDWARE (Truck-mounted Attenuators and Traffic Barriers) (Continued)

Acceptance Letter # And Date	Manufacturer, Developer, Agency, etc.	Device(s)
Crashworthy Longitudinal Barriers (To NCHRP Report 230 OR 350 AS NOTED) (NCHRP 230 WORK ZONE BARRIERS MAY REMAIN IN USE UNTIL OCTOBER 1, 2002.) (Continued)		
FHWA B-21 11/27/92, **FHWA B-21A** 09/27/94, **FHWA B-26** 1/7/94, **FHWA CC-47** 05/08/98	Energy Absorption Systems	TL-2, TRITON Water Filled Barrier TL-2, TRITON end treatments TL-3 Acceptance
FHWA B-41 10/10/97	Iowa DoT	TL-3, Iowa PCB Temporary CMB - F shape w/ pin & loop connection
FHWA B-15 12/6/90	Roadway Safety Service	(NCHRP 230), DRAGNET Vehicle Arresting System
FHWA B-41 10/20/97	Rockingham Precast.	TL-3, Temporary CMB - F shape w/ slotted tube/T-bar Connection
FHWA B-30 1/17/95 **FHWA B-34** 1/29/96,	Safety Barrier Systems	(NCHRP 230) TL-3, GUARDIAN Water Filled Plastic Barrier
FHWA B-36 5/31/96 **FHWA CC-44** 3/06/98	Trinity Industries / Syro Steel - Texas A&M	TL-2, LOW-PROFILE Concrete Barrier for Work Zones TL-2, LOW-PROFILE Concrete Barrier END TREATMENT

ATTACHMENT A, TABLE III.1.B
ACCEPTABLE CRASHWORTHY CATEGORY 3 HARDWARE (Breakaway Sign Supports)(Continued)

Accept. Letter	Manufacturer / Supplier	Brief description of device(s)
SS-1 7/14/86	Southwestern Pipe, Inc.	POZ-LOC anchor system - 2 3/8 in. O.D. posts, max .095 in. wall thickness. **
SS-2 8/19/86	Trus Joist Corp.	MICRO=LAM - 14 7/8 X 7 7/8 in. box section plywood post. Tested in S-2 soil.
SS-3 10/3/86	Allied Tube & Conduit Corp.	QWIK-PUNCH tube system - max size 2 1/4 x 2 1/4 in. x 12 ga. post set in reinforced sleeve base.
SS-4 1/29/87	Minute Man Anchors, Inc.	Breakaway coupling for use with 3 lb/ft steel flanged channel post (superseded by new hardware on 3/10/88. See SS-6) **
SS-5 6/15/87	(Memo to Regions)	a. Perforated square steel tube - 2 x 2 in. x 0.105 wall thick. max size.** b. Single 3 lb/ft steel U-post. ** c. Dual 3 lb/ft steel U-post. ** d. Ariz. dual legged slip base S4x7.7 post e. Texas dual leg slip base, W12x45 post f. to g. repeated SS-1 to SS-4 above
SS-6 3/10/88	Minute Man Anchors, Inc.	Breakaway coupling for use with steel flanged channel supports. **
SS-7 9/1/88	(Region 5 Memo)	Wisconsin Large Sign Support System - slip base w/no upper hinge, sign attachment clips provide for release, W12x22 posts tested
SS-8 3/31/89	Unistrut Corp.	TELESPAR small sign supports max size 2 ½ x 2 ½ in. x 12 ga.
SS-9 3/16/89, 4/7/89	Franklin Steel	EZE-Erect Sign Posts - max 4.0 lb/ft flanged posts.
SS-9A 10/17/96	Franklin Steel	Dual EZE-Erect in strong soil.
SS-10 5/11/89	HwyCom Corp.	3-Inch Diameter, 1/8 in. wall, fiber-reinforced plastic post. (see SS-12)
SS-11 5/18/89	Allied Tube & Conduit	Quick-Punch post - Max size 2.25 x 2.25" x 14 ga. in unreinforced 12 ga. sleeve base.
SS-12 8/3/89	HwyCom Corp.	Dual post installations of 3-inch FRP.
SS-13 8/31/89 10/2/89 12/12/91 12/27/91	Marion Steel	Single to triple 3 ppf and single or dual 4 ppf Rib-Bak post installations with ground splice. ** Project by project acceptance of Florida's splice in both soil types
SS-14 10/27/89	Marion Steel	Rib-Bak Post with Minuteman Coupling **
SS-15 12/12/89	(Memo to Region 1)	Single 3" and 4" diameter Aluminum, 3/16" wall, direct burial tube. **

ATTACHMENT A, TABLE III.1.B
ACCEPTABLE CRASHWORTHY CATEGORY 3 HARDWARE (Breakaway Sign Supports)(Continued)

Accept. Letter	Manufacturer / Supplier	Brief description of device(s)
SS-16 12/29/89	Minute Man Breakaway	MMB-1HD breakaway device for use with 3 #/ft. steel flanged channel "U"-posts.
SS-17 1/8/90 SS-17A 3/7/95 SS-17B 4/25/95	Transpo Industries	Type A and Type B breakaway couplings.(If installed by direct burial, then Type AUX for S-1 soil only.) (Posts limited to 45 #/ft below the hinge.)
SS-18 6/19/90	Minute Man Breakaway	MMB-1HD breakaway device for use with two 3 #/ft flanged channel "U" posts in strong soil. (see SS-21 for weak soil acceptance letter)
SS-19 7/31/90	Allied Tube and Conduit	Square-Fit signpost systems.
SS-20 9/20/90	Franklin Steel	2 to 3 pound-per-foot flanged channel "U" posts.
SS-21 12/26/90	Minute Man Breakaway	MMB-1HD breakaway device with two 3 #/ft flanged channel "U" posts in both strong and weak soil.
SS-22 1/4/91	Trus Joist Corporation	Type "L" MICRO=LAM with revised saw cut
SS-23 3/14/91	(memo to Reg.1)	New Jersey Breakaway Couplings
SS-24 5/1/91	Unistrut Corp.	Triangular Slip Bases for Square Tube Sign Supports.
SS-24A 10/22/97	Xcessories Squared	Reference Xcessories Squared as the manufacturer.
SS-25 6-4-91	(memo to Regions)	a. Single or dual 4"x4" wood, undrilled b. Single 6"x8" wood with 3.0" holes c. Single 6"x6" wood with 2.0" holes d. Single 4"x6" wood with 1.5" holes e. Dual W6x12 steel post on slip base (up to 18 ppf for dual supports OK)
SS-26 2/11/92	Unistrut Corp.	Telespar square perf. tube small sign supports without sleeve around base post.
SS-27 5/15/92	Montana D.O.T.	Round wood post supports
SS-28 5/26/92	(memo to Region 4)	3 ½" Diam. Thin Walled Aluminum Tube Single Spliced (6" c-c) Marion Steel or Franklin Steel 4 ppf U-channel post
SS-29 7/15/92	A.B. Chance	Helical Screw Foundations for Motorist Aid Call boxes
SS-30 9/17/92 10/5/92	Hapco Division	Cast Aluminum Shoe Base for Motorist Aid Call box Supports
SS-31 10/22/92	Allied Tube and Conduit	Single Perforated Square Steel Tube 2 ½" 12 ga in 7 ga anchor

ATTACHMENT A, TABLE III.1.B
ACCEPTABLE CRASHWORTHY CATEGORY 3 HARDWARE (Breakaway Sign Supports)(Continued)

Accept. Letter	Manufacturer / Supplier	Brief description of device(s)
SS-32 10/28/92	(memo to Region 7)	Western Red Cedar for Breakaway Wood Supports
SS-33 10/29/92	Transpo Industries, Inc.	201C and 301C Pole-Safe couplings for Motorist Aid Call Box Supports
SS-34 3/20/93	Louisiana DOTD	Omni Directional Slip Base, 3.5" diameter post
SS-35 5/28/93	Imperial, Inc	Aluminum tube 2.375" diameter
SS-36 9/3/93	(Memo to Regions)	Large and Small Sign Supports (See memo for details on various Wood, U-Channel, Perf.Sq.Steel Tube, Slip Base, FRP posts.)
SS-37 8/13/93	Greenline	Recycled Thermoplastic Delineator Posts
SS-38 10/27/93	Unistrut Corp.	Telespar Cast Iron Three-Bolt Slip Base
SS-38A 10/22/97	Xcessories Squared	Reference Xcessories Squared as the Manufacturer
SS-39 10/25/93	Recycled Plastic Prod.,Inc	3.5" x 3.5" Recycled Plastic Small Sign Support
SS-40 10/27/93	Unistrut Corp.	2" Square Perforated Steel Tube, One Post, Direct Bury
SS-41 11/8/93	Richard Strizki	Load Concentrating Coupling and Adjustable Anchor and Bracket Assembly
SS-42 11/10/93	Marion Steel Co.	1.12 PPF and 1.33 PPF A-36 Delineator Posts
SS-43 1/18/94	VSAR Systems	Speed-E-Rect breakaway device for U-channels
SS-44 3/30/94	Unistrut Corp.	14-gage A715 Gr 60 Perf. Square Steel posts *
SS-45 5/11/94	(Memo to Region 3)	Drilled Wood posts in concrete foundations, Pennsylvania designs **
SS-46 6/17/94 SS-46A 9/21/95	(Memo to Region 8)	Unmodified Cedar Posts full dimension 4"x6"
SS-47 9/14/94	South Dakota DOT	Splicing 3PPF Marion post to 4PPF Franklin Stub
SS-48 9/23/94	SAFE, Inc	Safe Foundation and Anchors base for breakaway couplings
SS-49 10/26/94	Galvacor	2 PPF U-channel A-36 steel delineator posts
SS-50 11/8/94	(memo to Region 3)	Virginia's 5x5 unmodified single wood post in soil-cement foundation **

ATTACHMENT A, TABLE III.1.B
ACCEPTABLE CRASHWORTHY CATEGORY 3 HARDWARE (Breakaway Sign Supports)(Continued)

Accept. Letter	Manufacturer / Supplier	Brief description of device(s)
SS-51 1/23/95	Unistrut Corp.	A570 Perforated Square Steel Posts W/60 ksi yield
SS-52 2/8/95	Xcessories Squared	Three-Bolt Slip Base (same as SS-24) (Letter was originally written to Allied Highway Sales, but hardware is manufactured by Xcessories Squared.)
SS-52A 10/22/97	Xcessories Squared	Reference letters to Unistrut and Allied Highway Sales
SS-53 3/9/95	Lancaster Composite	Concrete-filled fiberglass posts
SS-53A 3-19-96	Lancaster Composite	Direct Bury acceptance of some SS-53 posts in std soil**
SS-54 3/28/95	Chicago Heights Steel	U-channel posts to 4 PPF in "EZE-Erect" configurations
SS-55 4/24/95	Colorado Dept. of Transportation	4 x 6 Wood posts installed sideways
SS-56 7/13/95	Marion Steel Company	"Lap Splice" for triple 3ppf and 4ppf in both soils
SS-56A 3-14-96	Marion Steel Company	Modify design to use "bar spacer"
SS-57 9/26/95	SS-57 9/26/95	Minuteman coupler on Triple 3ppf and 4ppf (w/soil plate on 4ppf),in all soils.
SS-58 9/27/95	Flexstake	Flexible delineator posts
SS-59 3-7-96	Chicago Heights Steel	Dual 3 ppf u-channel in strong soil
SS-59A 4-19-96	Chicago Heights Steel	Modify design to use "bar spacer"
SS-60 10/27/95	Clifford Dent	Couplings for sign supports
SS-60A 10/21/96	Clifford Dent	Larger bolts with same necked-down diameter
SS-60B 6-/20/97	Clifford Dent	Additional bolt designs
SS-61 2-27-96	(memo to Region 10)	Revised Oregon multi-directional slip base
[LS-45 4/5/96	Transpo Industries	Prototype Double Neck Coupling for signs and luminaires]
[LS-45A 4/29/96	Transpo Industries	Double-Neck Pole-Safe coupling for signs and luminaires]
SS-62 6-3-96	Western Highway Products	ULTI-MATE perforated square steel tube sign supports

ATTACHMENT A, TABLE III.1.B
ACCEPTABLE CRASHWORTHY CATEGORY 3 HARDWARE (Breakaway Sign Supports)(Continued))

Accept. Letter	Manufacturer / Supplier	Brief description of device(s)
SS-63 7/2/96	S Square Tube Products	.Perforated square steel tube sign supports
SS-63A 6/20/97	S Square Tube Products	Consolidated acceptance letter
SS-64 7/18/96	Marion Steel	Metric "Rib-Bak 2" Posts
SS-65 9/5/96	Poz-Loc	Slip Base**
SS-66 8/8/96	HwyCom	Universal Anchor System for FRP & Poz Loc Posts
SS-67 9/9/96	Franklin Industries	60 KSI U-Channel Posts recertification
SS-68 9/18/96	X-Cessories Squared	Slip Base for Square Steel Tube posts **
SS-68A 12/20/96	X-Cessories Squared	Slip Base, Triple Square supports in Standard soil
SS-68B 10/7/97	X-Cessories Squared	Slip Base for Retrofit Square Steel Tube Posts
SS-68C 10/22/97	X-Cessories Squared	3-bolt slip base for perf. square steel posts. Accepted previously via SS-52 on 2/8/65 under different name
SS-69 9/18/96	Safety Quest, Inc	U-Channel Slip Splice
SS-70 9/25/96	Richard Buhler	Sleeve it N Go for 4x4 wood posts
SS-71 12/23/96	Davidson Plastics	Flexi - Guide Delineator Posts
SS-72 1/13/97	Foresight Products	V-Loc Sign Support System
SS-73 2/24/97	PennDot	"Universal" Spacer Bar for splicing u-channels
SS-74 3/14/97	Granger and Assoc	"ANYTWO" bracer bar for splicing u-channels
SS-75 4/9/97	Universal Anchor Systems, Inc	Universal Anchor System with HWYCOM and POZLOC posts
SS-76 1/9/98	New Hampshire DoT	Certain thin walled Aluminum pipe and steel u-channels
SS-77 6/28/97	Chicago Heights Steel	"Eze-erect" type breakaway system using Gr 9 bolts.
SS-78 2/3/98	SMI Steel - Southern Post	Steel Flanged Channel Sign Posts up to 3.7 kg/m

* Supports conform to FHWA breakaway requirements based on the 1985 AASHTO Standard Specifications for Structural Supports for Highway Signs, Luminaires and Traffic Signals. After May 1993, velocity change permitted is 5.0 m/s (16.4 ft/s) per NCHRP Report 350.
** These small sign supports were only tested and/or found acceptable in NCHRP Report 350 "Standard" soil (Report 230 S-1 "Strong" soil.) Should a state wish to install this hardware in "weak" soil, further crash testing is recommended.

Questions and Answers
About
Crash Testing of Work Zone Safety Appurtenances

(These questions and comments are from State transportation agencies, industry, and the Federal Highway Administration.)

1. General

1.0 QUESTION - Was public input involved in adopting the provisions of National Cooperative Highway Research Program (NCHRP) Report 350 for the NHS?

ANSWER - The public was involved through a formal rulemaking process that culminated in a final rule in the July 16, 1993, Federal Register. In that notice, the FHWA added NCHRP Report 350 at paragraph 625.5(a)(13) of Title 23, Code of Federal Regulations (23 CFR). Since then, the "Guides and References" section of 23 CFR, Part 625, under which the NCHRP Report 350 was cited, has been removed. The NCHRP Report 350 is now cited in Section 16, Paragraph (a)(12) of the Non-Regulatory Supplement to the Federal-aid Policy Guide, Subchapter G, Part 625 (NS 23CFR 625). *The rulemaking process involved publishing the proposed rule and receiving public comments on the proposed rule.*

The July 16, 1993, Federal Register stated that contingent upon the results of ongoing research and service performance evaluation, the FHWA anticipated that approximately five years after the adoption of NCHRP Report 350 all new installations of traffic barriers and other roadside safety features on NHS projects would be only those that have been judged to meet the testing and evaluation criteria in Report 350.

Using the effective date of the adoption of that rule would imply an implementation date of August 16, 1998. By our July 25, 1997, memorandum, "Information: Identifying Acceptable Highway Safety Features," the FHWA interpreted this milestone to be the "advertising date" and changed the effective date to October 1, 1998, to conform to the beginning of the Federal fiscal year.

On July 1, 1998, AASHTO proposed an agreement on revised implementation dates for Report 350 hardware including work zone devices. FHWA concurred with this agreement and has changed the deadline dates for Category 2 and Category 3 devices. All deadlines regarding work zone traffic control devices refer to the date by which all newly purchased devices must meet Report 350 criteria. Existing hardware may be used until they meet the end of their normal service life.

The agreed dates are as follow:

Category 1 devices: October 1, 1998

Category 2 devices: October 1, 2000

Category 3 devices, Attenuators: October 1, 1998

Category 3 devices, temporary barriers: New units must have tensile and moment resistance after October 1, 2000. New units must meet Report 350 criteria by October 1, 2002.

Category 4 devices. The deadline date has been deferred. An announcement of the implementation schedule for these devices is expected by October 1, 2000.

All new safety features on the NHS covered by the guidelines in the NCHRP Report 350 included in projects advertised for bids or included in work done by force-account or by State forces on or after the dates listed above are to have been tested and evaluated and found acceptable in accordance with the guidelines in the NCHRP Report 350.

1.2 QUESTION - Why is it necessary to establish the crashworthiness of work zone appurtenances, since performance of existing devices does not appear to be a problem? Devices are hit resulting in only minor damage.

QUESTION - The need for the criteria is unclear. Thousands of devices have been hit and the vehicles have left the scene, so is there really a problem? There have been no known incidences of a light coming off a sign and coming through a windshield.

ANSWER - From the results in two States that recently conducted work zone (WZ) accident studies, we know that the severity of the impacts with WZ appurtenances is generally what would be expected. That is, the severity of the crash increases with the mass of the devices impacted. Impacts with channelizing devices are less severe, those with sign supports more so and barriers the most. In a soon to be published study of WZ crashes, it was reported 22 of 495 crashes involved signs and similar devices. Two crashes resulted in injuries requiring hospital treatment. In one, a vehicle struck a portable sign on the shoulder. The sign broke the windshield, and the driver suffered internal injuries. In the other, a portable sign blew down, leaning across a concrete barrier in the travel lane. A vehicle struck the sign, breaking the windshield, with the driver receiving facial lacerations. In another WZ crash study, 12 of 589 crashes studied involved Channeling Devices (Barrel), three of which resulted in injuries.

In summary, there is evidence of a problem. This problem is with devices that are often placed in the travel way or on shoulders where they can be easily impacted by errant drivers. There is also technology that can address the problem at a minimal cost per device. Since we have a cost effective solution to the problem, we believe we should implement it.

1.3 QUESTION - The supply of crashworthy WZ devices is a concern. Will the manufacturers of approved products be able to meet the demands throughout the country?

ANSWER - We cannot speak for the manufacturers, but we do not expect wholesale shortages. If there are spot shortages we will adjust to them. Most of the WZ devices are generic so we would expect that anyone who is willing to enter the market could easily manufacture them.

1.4 QUESTION - Will the FHWA use the results of tests conducted by one company to accept similar hardware offered by another, and what makes one product "similar" to another?

ANSWER - We believe we should not require testing when we have the information in hand. Therefore, if a product has been shown to be crashworthy via full scale or bogie testing, other products that are identical or nearly identical can be assumed to perform in an acceptable manner under impact. We have accepted certain small sign supports and some recycled plastic guardrail offset blocks on this basis.

When public agencies sponsor testing, such as Federal Highway Administration (FHWA) managed research studies or "pooled-fund" crash testing programs, there is a tendency to focus on "generic" hardware rather than testing specific proprietary devices. When the occasional proprietary device is tested under these studies, the results may be examined to see how far they may be extrapolated to cover other existing hardware.

We agree that there is a question when it comes to determining if a product is "nearly identical" to a previously tested product. Our assessment will be made by comparing the design drawings, material specifications, and the as-tested information on an accepted device with the design details and the material specifications for a candidate device. When these are not an exact match, we will evaluate how we believe the differences might influence the test results and, we will be cautious when the performance of the device is close to the acceptable limit. This will likely result in our requiring testing.

1.5 QUESTION - It is not economically feasible to replace all necessary equipment by October 1, 1998.

ANSWER - Knowledge about the availability of crashworthy WZ appurtenances, including traffic control devices, has been accessible since 1989 in the AASHTO Roadside Design Guide, and the deadline for safety appurtenances to meet the requirements of NCHRP Report 350 was published in 1993. Notwithstanding, many agencies did not feel that they were prepared for this deadline. For this and other reasons AASHTO and FHWA signed the agreement revising some dates for implementing work zone traffic control devices . The new dates are listed in Question 1.0.

1.6 QUESTION - The October 1 deadline refers to what day?

ANSWER - The October 1 dates refers to the advertising date for contracts and for use by maintenance and force account activities on the NHS.

1.7 QUESTION - Will data from the pooled - fund study on work zone devices be made available to the industry?

ANSWER - The member States of the pooled-fund study will be the first to receive the results of the testing. We will endeavor to provide this information to the other highway agencies and industry once the pooled-fund States have been informed.

2. CHANNELIZING DEVICES

2.0 QUESTION - Who is responsible for testing various combinations of devices such as drums, lights, and flags etc., and which combination(s) should be tested.

ANSWER - The providers of the traffic control devices (TCDs) are responsible for the testing of the individual devices and/or the combinations they are used in. Since lights may detach and impact the windshield or may remain attached to the TCD and be knocked clear by the vehicle, it would seem that all parties would benefit from a cooperative effort between the manufacturers of the TCDs (manufacturers of basic devices and the optional devices) to determine crashworthy combinations and to have the "worst case" examples tested.

We appreciate the concerns regarding the difficulty of identifying "generic" configurations of optional features for crash testing purposes and the potential costs of testing many alternative designs. We believe there are a number of options open for reducing the costs of testing, specifically of warning lights:

a. *If the light breaks loose from the TCD and impacts the windshield there must be no penetration of the passengers' compartment. If a relationship between the size, shape, structure, and mass of the lights and the probability of the light penetrating the windshield could be established, this could be used to qualify lights that can be assumed to be less hazardous. Laboratory testing equipment is available that could launch individual lights into a windshield. A standard could then be developed for lights that would be safe regardless of the attachment to the TCD.*

b. *For those lights that fall outside of the crashworthy standard because of density, mass, or configuration (i.e., sharp corners on the battery pack or mounting hardware), then a standard attachment specification would be needed to assure that the light does <u>not</u> come free of the basic TCD. A crash test of representative TCDs with the heaviest light or light/battery device firmly attached would then be required. It will probably also be necessary to demonstrate that a specific TCD has the capability to "hold on" to the light during an impact. (Recent testing has shown that relocating the battery assembly to the base of the device yielded successful results.)*

c. *If a surrogate test can be developed to show that the strength of the connection of the light to the TCD is sufficient to prevent separation during impact, this test can be used by the various basic TCD vendors to show that their device will be acceptable when used with the light. This surrogate testing should be markedly less expensive than crash*

testing, and can be used when minor changes to the geometry or chemical composition of the TCD are made. The mass of the light must still be significantly less than that of the drum so as not to alter the center of gravity of the drum casing it and the light to fly up and damage the windshield.

2.1 QUESTION -By what date do Category 1 and 2 devices used on projects on NHS highways have to conform to NCHRP Report 350?

ANSWER - (See Question 1.0 for information on dates.) Newly purchased Category 1 and 2 devices will need to comply on projects advertised the agreed upon dates. Contracts currently in preparation for award after this date should inform contractors that the TCDs they intend to use on NHS routes are to comply. The states do not typically include TCD fabrication details in their specifications or special provisions, and there will be no need to do that in the future except to require that crashworthy devices be used on the NHS.

2.2 QUESTION - When the Department (State Department of Transportation) is accomplishing work on NHS highways utilizing our own State forces, what date do our Category 1 and 2 devices have to conform to NCHRP Report 350?

ANSWER - Standards for NHS routes apply no matter where the funding comes from or who is doing the work. (See Question 1.0 for information on dates.)

2.3 QUESTION -FHWA was asked, "Will the FHWA delay the full implementation of the National Cooperative Highway Research Program (NCHRP) Report 350 criteria for work zone devices by one-year to October 1, 1999."

ANSWER - (See Question 1.0 for information on dates.)

2.4 QUESTION - Will the FHWA maintain a list of Category 1, 2, 3 & 4 devices that conform to NCHRP 350? We realize that the FHWA memorandum indicates that no list will be kept for Category 1 devices. However, we recommend that they do unless FHWA can work with ATSSA to have them do it. It will be much better and easier for one organization to accomplish this instead of each individual State having to obtain the self certification statement from each manufacturer. If the FHWA does not intend to maintain a list for the other three categories either, we believe that should also be handled the same way as the Category 1 is handled--by one organization.

QUESTION - We feel frustrated that FHWA hasn't really looked into the inspection (enforcement) needs of the states. Such as: how does an individual state (or states) keep an up-to-date listing of accepted or approved devices such that all industry contractors and subcontractors can have the same list available for their use?

ANSWER - These questions address concerns with using self-certification (also called manufacturers' declaration of conformity) as one of two acceptance processes for Category 1 devices. FHWA chose this process because the administrative and regulatory burden for FHWA, State and local highway agencies, and industry is commensurate with the potential low risk of the devices. Also this process responds to feed back about implementing the crashworthiness of WZ features that we do not inhibit innovation.

In proposing self-certification, the FHWA is recognizing an acceptance procedure used in other regulated product sectors for where level of risk is low. It is believed that this level of assurance will adequately address safety and impose the least costs on industry and consumers.

FHWA will maintain lists of Category 2, 3, and 4 devices but we will not keep a list of the numerous Category 1 devices. The intent of FHWA is not to simply transfer the keeping of an approval list for Category 1 devices to the highway agencies or to industry associations. The details of a self-certification program are left to the highway agency discretion but we would expect it to be commensurate with the risk to the traveling public. A list of accepted devices is not a necessary part of a self-certification program. A national association may keep a list of Category 1 devices as a service to their members at their discretion. Other associations have created similar programs for their members to reduce the burden and increase the confidence of their member's customers. Often a mark or label is used to identify each product as listed as certified by that association.

2.5 QUESTION - If a highway agency does not believe that the vendor's self certification of a device is accurate, what can be done?

ANSWER - By the nature of the Category 1 devices we would expect this to be a rare occurrence. First, the highway agency should review the basis (supporting information). Since the vendor's self-certification is subject to approval by the individual highway agencies, if they find it unsatisfactory they will discontinue accepting it. If the highway agency has an actual or suspected product failure, they should perform tests or have an independent or "check" test performed.

2.6 QUESTION - A contractor has devices in his inventory that he believes meet Category 1 but is having problems obtaining a letter of self-certification for them from the manufacturer. Does that mean these devices cannot be used on the NHS after the October 1st date?

ANSWER - A vendor who is supplying the devices for use on a highway agency's project is responsible for the self-certification. Therefore the contractor can self-certify his current inventory of Category 1 devices as meeting NCHRP Report 350 standards if he is willing to be responsible for the crashworthiness of the devices.

2.7 QUESTION What should be in the letter of self-certification?

ANSWER - The letter should contain at a minimum:
(I) A title, e.g., "Certificate of Crashworthiness";
(ii) Name and address of vendor making the certification.
(iii) Unique identification of the certificate (such as serial number) and of each page and the total number of pages;
(iv) Description and unambiguous identification of the item tested;
(v) Identification of the basis for the self certification process used and to what Test Level of NCHRP Report 350. This basis as listed in the July 25, 1997-memo as crash test experience with similar devices or years of demonstrably safe operational performance. (Simplified crash testing showing that a device poses no risk to vehicle occupants may be used to support the manufacturer's certification. This simplified testing must, as a minimum, be documented by a written report, observed by an independent, impartial observer, recorded on videotape, and include a means, other than the test vehicle's speedometer, for determining the vehicle speed at time of impact.)

(vi) A signature and title, or an equivalent identification of the person(s) accepting responsibility for the content of the certificate (however produced), and date of issue;
(vii) A statement that the certificate shall not be reproduced except in full.

2.8 QUESTION - Can a Category 1 device be self-certified by a vendor as safe solely on the basis of height and weight?

ANSWER - No. Category 1 devices will be allowed based upon the vendor's self-certification if the device meets a specification proved safe by crash or surrogate testing, crash testing, or safe operational performance. The self-certification is based on an analysis and determination by the vendor that the size, weight, material and shape are similar to devices proven safe. We expect the vendors would have an analysis on file to support their self-certification.

2.9 QUESTION - Is there crash test information available to assist vendors in analysis of their Category 1 device?

ANSWER - Test reports on Category 1 devices will be available in July 1998 on the FHWA Office of Highway Safety's homepage - http://www.ohs.fhwa.dot.gov/design. A video or videos will be available from the FHWA-NHTSA National Crash Analysis Center for a fee. The center's homepage is http://gwuva.gwu.edu/ncac/.

2.10 QUESTION - Many traffic control contractors manufacture their own Type III barricades. This will be costly; those costs will be passed on to the State Departments of Transportation.

ANSWER- [We assume that the above comment means that since many TCD contractors currently manufacture their own devices it,will be more costly for them to begin using crashworthy work traffic control devices.]

It may be marginally more costly to begin using a crashworthy device rather than a noncrashworthy device. For example, if a TCD contractor begins to manufacture a crash-tested generic design, the additional cost will be that of revising the manufacturing process. If a TCD contractor decides to have their own type III barricade design crash-tested the only cost is that of the crash test(s). This of course will be amortized over the number of barricades built.

There may be an increase in the effort spent in quality control from the existing level so that a contractor can ensure that each device is manufactured correctly.

2.11 QUESTION - There is a lack of uniformity among work zone traffic control devices. What if the States use devices that have not been found acceptable by the FHWA?

ANSWER - The provision in our July 25 memorandum permits a State to use a "home grown" device it has determined to be crashworthy according to the NCHRP Report 350. FHWA headquarters acceptance is not a requirement.

If a device is determined to be crashworthy, it will be the State's prerogative to accept or reject that product, as it has always been. The FHWA will not take a position on State's selection from among competing crashworthy devices.

2.12 QUESTION - Will the implementation of the NCHRP Report 350 procedures mean the banning of wooden barricades?

ANSWER - The NCHRP Report 350 procedures are not material based, but performance based. Accordingly, the appurtenance design is being evaluated and not solely the material. While we may speculate about the potential crashworthiness of a class of appurtenance, crash testing and in-service evaluation is the validation.

2.13 QUESTION - How will all of the varieties of barricades in current use be tested?

ANSWER - We look to the industry to recommend how highway safety can best be served when crashworthy barricades are required. If a small number of standard crashworthy barricade designs could be developed, the various manufacturers would have an easier time providing crashworthy barricades. The standard designs should provide guidance on variations in size, materials, fastener hardware, permissible auxiliary devices, etc.

The results of a survey conducted by the American Traffic Safety Services Association (ATSSA) will be most helpful in determining the extent of the crash tests needed to qualify (or disqualify) the range of currently used barricades. ATSSA intends to sort the barricades and other devices into categories and the "worst case" example(s) from each Category tested to qualify the remaining devices in a category.

2.14 QUESTION - Type III barricades need to be strong enough to be easily relocated without breaking or coming apart.

ANSWER - We agree that Type III barricades must withstand the rigors of movement at a construction site, but we also believe that they can be designed so that they do not present an undue hazard to the traveling public.

2.15 QUESTION - Manufacturing their own equipment allows a contractor to control their own work. Will having crashworthy barricades prevent that?

ANSWER - As long as satisfactory quality control is used and the devices meet the requirements of NCHRP Report 350, contractors and other entities can manufacture their own devices. For example, there are generic Type III barricades mentioned in the Roadside Design Guide of perforated square metal tubes, plastic tubular elements or wood that have been satisfactorily crash tested and seem suitable for easy assembly.

3. SIGNS

3.0 QUESTION - There are many varieties of trailer-mounted sign supports. Will they have to be crash tested?

ANSWER - Yes. The crashworthiness of trailer-mounted sign supports is a concern. We understand that some have been banned by certain States because of the potential hazard.

3.1 QUESTION - How will the sign substrate affect the performance of a portable sign support? Plywood (now allowed) will perform differently from aluminum.

Answer - In crash tests of various types of portable sign systems, both the plywood and the aluminum substrates separated from the sign support and penetrated the windshield. The fabric sign panel performed satisfactorily when tested. Other substrates are currently being considered for crashworthiness.

Improvements in the connections between sign panels and supports may address the problem of separation for some type of supports. Also, the use of plastic sign substrates for use with plastic drums has been successfully crash tested by the Texas Transportation Institute.

3.2 QUESTION- Should portable / temporary sign stands be crash tested at a 90 degrees angle as well as head on?

Answer - NCHRP Report 350, in section A3.2.3, states:

> *"Because errant vehicles may approach a support structure, work zone traffic control device, ... at various angles, it is recommended that the device be tested assuming the most severe direction of vehicle approach consistent with the expected traffic conditions..."*

Temporary sign stands are often used near intersections where traffic approaches from many directions. Also, when along highways sign stands are sometimes turned 90 degrees to conceal the message from the driver. In this orientation the cross brace that spreads the fabric sign panel is critical. Full-scale testing has shown that tubular metal cross braces will penetrate the windshield, whereas thin, flexible cress braces will not. Therefore any portable or temporary sign stand should be evaluated to determine if the cross brace is a potential hazard.

4. BARRIERS

4.0 QUESTION - Concerning temporary concrete barrier--we (State DOT) don't want to get rid of what we have and use something new in 1998 that will meet Report 230; then in 2002 get rid of that, and use something that will meet NCHRP Report 350. We want time to find something acceptable to use that will meet 350. A phase-in period is desired. The life of a barrier could be ten years or more.

ANSWER - We agree it seems reasonable to begin using portable concrete barrier(PCB) joint details that meet the requirements of NCHRP Report 350. There are some currently available for use. As of July 1, 1998 they are the Iowa PCB (TL-3, F- shape w/pin & loop), Rockingham Precast (TL-3, F - shape w/ slotted tube/T -bar connection) and the Low Profile barrier (TL-2).

The AASHTO / FHWA agreement permits the use of connections meeting NCHRP 230 guidelines until they complete their normal service life. Connections that do not meet those criteria may be considered for a retrofit. In addition in the current work zone pooled funded study it has been proposed to develop a retrofit for strengthening existing PCB joint details. If successful that may allow continued use of an existing PCB on the NHS until the end of its useful life. Any phase in period beyond 2002 would depend on the particular circumstances of the State including how safe is their current joint detail.

4.1 QUESTION -Will contractors be allowed to continue using their existing barriers (providing it is one of the five barriers identified tested in the 1996 RDG) until a reasonable amount of time has passed after the NCHRP Report 350 acceptance of a non-proprietary, reasonably priced temporary barrier?

Answer- (See Question 1.0 for information on dates which may alter the answer that follows.) Old barrier segments can be used until October 1, 2000, as long as they are still serviceable and conform to the NJ or F shape. After October 1, 2000, they must be one of the five listed in the "crash tested and operational" section of Chapter nine of the RDG (or otherwise meet the tensile and moment requirements of the AASHTO / FHWA agreement.). The key element, of course, is the connection between barrier segments. This was a major concern of the states that are participating in the pooled-fund study "Crash Testing of Work Zone Traffic Control Devices." Ranked highly by the group was the need to "retrofit" current barriers that do not meet the NCHRP Report 350 criteria. Through a combination of computer modeling and test simulation and actual crash testing of practical designs, the highway community should have jointed temporary concrete barrier designs available at the end of the study. This should occur well ahead of the 2002 deadline. If any barrier segments that do not meet NCHRP Report 350 criteria are still serviceable by 10-1-02 they may be candidates for this retrofit.

It is recommended that no new non-NCHRP Report 350 barriers be purchased or manufactured.

4.2 QUESTION - Large deflection of portable barriers in the adjacent work space is a concern.

ANSWER - Agree, that is why maximum allowable deflection should be considered when selecting the type of barrier to use. When using PCB's, the maximum allowable deflection should govern whether to use stiffeners for joints or attachment of the barrier to the pavement or deck.

4.3 QUESTION - The 25-degree angle hit is questionable in real applications.
QUESTION - Installing a device exactly is often not practical in a real application as it was tested (installing barriers on a curve, for example).

ANSWER - An appropriate answer to this is to quote from NCHRP Report 350, "Recommended Procedures for the Safety Performance Evaluation of Highway Features."

From the Summary:

"These procedures are devised to subject roadside safety features to severe vehicle impact conditions rather than to typical or average highway situations. Although the innumerable highway-site and safety-feature application conditions that exist are recognized, it is impractical or impossible to duplicate these in limited number of standardized tests. Hence,

the approach has been to normalize test conditions: straight longitudinal barriers are tested although curved installations exist; flat grade is recommended even though installations are sometimes situated on sloped shoulders and behind curbs; idealized soils are specified although roadside safety hardware are often founded in poor soil or frozen ground. These normalized test conditions have a significant effect on a feature's performance but are of secondary importance when comparing results or two or more systems.

Page 4, Section 1.4 PERFORMANCE LIMITATIONS, 2nd paragraph:

"For these reasons, safety features are generally developed and tested for selected idealized situations that are intended to encompass a large majority, but not all of the possible in-service collisions. Even so, it is essential that test results be evaluated and interpreted by competent researchers and that the evaluations be guided by sound engineering judgement. "

Note: The Test Levels 1 through 3 in NCHRP Report 350 represent increasing severe impact severities. In general, each impact severities is described by a combination of test vehicle(weight), impact speed and impact angle. The decision in NCHRP Report 350 to vary impact severities by holding the vehicle and angle constant while varying the speed was based on the desire to limit the cost of testing rather than an attempt to mimic real life conditions. Therefore, depending upon the site conditions a portable concrete barrier meeting TL-2 test criteria may be appropriate.

5. CRASH CUSHIONS AND TRUCK MOUNTED ATTENUATORS

5.0 QUESTION - Please clarify the FHWA position on the use of NCHRP Report 230 qualified work zone crash cushions after October 1, 1998.

ANSWER - FHWA is no longer reviewing testing conducted under NCHRP Report 230 guidelines, so there will be no new crashworthy work zone crash cushions found acceptable that do not meet the NCHRP Report 350 guidelines. The AASHTO / FHWA agreement calls for new units purchased after October 1, 1998, to meet Report 350 guidelines. Existing TMAs and Work Zone crash cushions may be used until they complete their normal service life.

5.1 QUESTION - Since existing NCHRP Report 230 TMA's have been tested at the equivalent of Test Level 2 will they still be allowed after October 1, 1998.

ANSWER - The Test Level 2 is the basic test level for TMA's in NCHRP Report 350. As such, TMA's designed to this test level can be used on the NHS. Review of crash performance shows that TMA's designed to this test level perform well. A transportation agency may use TMA's designed to test level 3 if they want the higher performance.

5.2 QUESTION - If a State wants to use vehicles with truck mounted attenuators in maintenance activities or in force account work on the NHS, does FHWA expect these State-owned TMAs to be upgraded to NCHRP Report 350 (or modified 350) criteria? Are existing non-NCHRP Report 350 TMAs not going to be allowed even if they are in good shape?

ANSWER -Existing NCHRP Report 230 TMAs can be used on the NHS until the end of their useful life (see question 5.3 below). Any new TMA's purchased should meet NCHRP Report 350 criteria.

5.3 QUESTION - What is the date that TMA's used on projects on NHS highways have to conform to NCHRP Report 350? If Oct. 1, 2002, is correct, do TMA's fit under Category 3? If they do not fit under Category 3, then what category do they fit under?

ANSWER - For the purpose of implementing the crashworthiness of WZ devices, TMAs may be considered as Work Zone Crash Cushions. They are Category 3 devices that come under the October 1, 1998, limit. Our intention is that TMAs (and other work zone attenuators) meeting Report 230 guidelines may continue to be used until they are worn out and ready for replacement with hardware conforming to NCHRP Report 350.

5.4 QUESTION - NCHRP Report 350 indicates in Section 2.4.1.3 on page 12 that it may be possible to extrapolate results of a TMA test for supporting vehicles of differing masses. It goes on to indicate that at the time of that writing no known validated procedures exist to make such extrapolations. Our question is, if a TMA manufacturer has a lesser weight recommended for the support vehicle than what they were tested at and they have based this weight off of some procedure, are they required to submit this to the FHWA for approval? It is our understanding that one company already has a lesser weight that can be used, but they did not have to have the approval of the FHWA.

ANSWER - Our procedures permits the use of devices / procedures that have been shown to meet NCHRP Report 350 guidelines without FHWA Headquarters acceptance. Our acceptance letters are a service to the industry that acknowledge the crashworthiness of a device so that a manufacturer does not have to provide the same detailed documentation to every highway agency. If a highway agency considers itself qualified to review the vendor's documentation in light of NCHRP Report 350, they are free to do so, preferably with the concurrence of the FHWA division office when NHS routes are concerned. To your point of the lesser-weight host truck, this should only be a problem with roll-ahead, which is not covered as an acceptance criteria in NCHRP Report 350. Our acceptance letters usually indicate that the test host vehicle is the maximum mass vehicle we consider acceptable with the covered TMA and, if not stated, is implied. If a contractor chooses to use a lighter vehicle to mount the TMA, then the contractor is responsible for being aware of the impact that vehicle will have on the roll-ahead distance and take appropriate action. Also NCHRP Report 350 includes evaluation criteria for the support vehicle as well as the impacting vehicle for TMA tests.

6. OTHER

6.0 QUESTION - How were work zones devices determined to be in category IV?

Answer - Category IV devices are devices which have proven to have significant value in the work zone by contributing to safer traffic operation though these devices may cause great harm to occupants of impacting vehicles. We believe that, as currently configured and deployed, these devices provide a net benefit to motorists. Substantial crash experience to date shows that crashes with these devices are rare. They have been identified by FHWA as portable, usually trailer-mounted, devices such as area lighting supports, flashing arrow panels, temporary traffic signals, and changeable message signs which are often used in or adjacent to the traveled way. The AASHTO / FHWA agreement calls for these devices to be studied and an implementation date announced by October 1, 2000.

We would not expect to identify any new category IV devices unless they have a proven substantial operational benefit.

CONTACT

For further questions E-mail: Harry W. Taylor E-mail - Harry.Taylor@fhwa.dot.gov
Nicholas Artimovich E-mail - Nick.Artimovich @fhwa.dot.gov

If you have questions that concern implementation within a specific State, please contact that respective Division Office.