30° SKEW

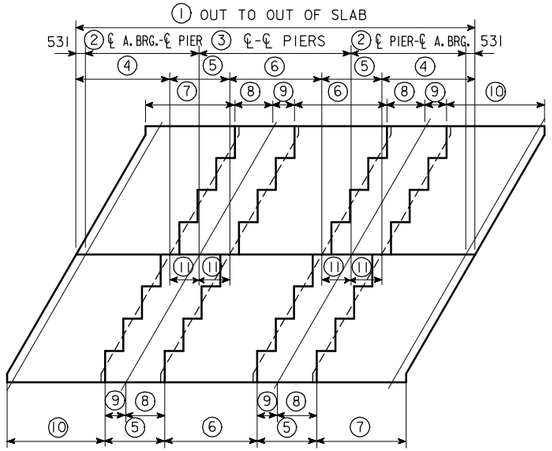

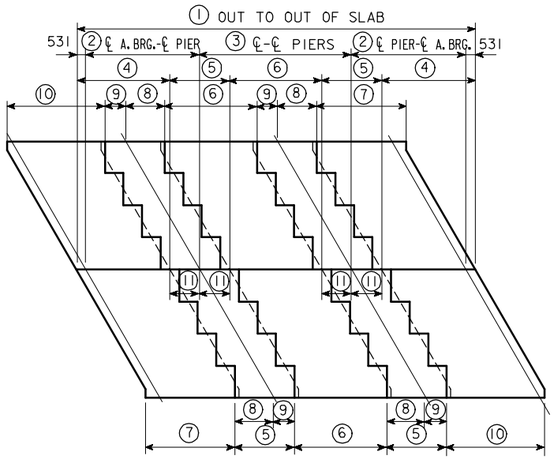

15° SKEW

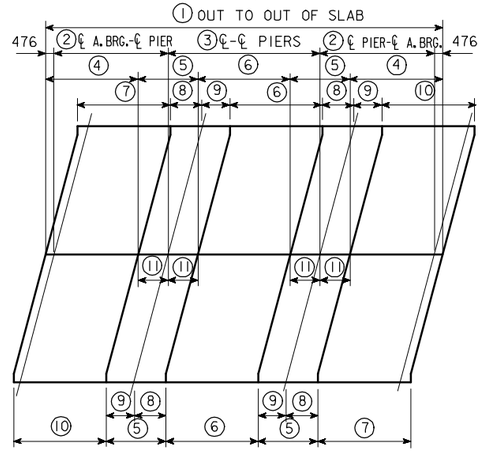

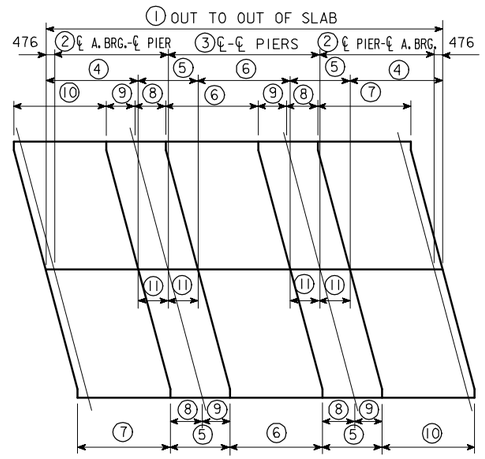

0° SKEW

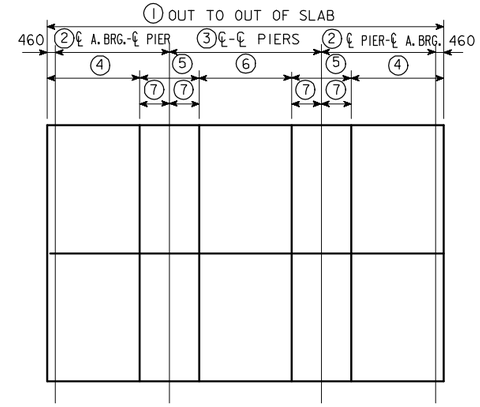

INDEX OF STANDARD SHEETS AVAILABLE

SHEET NO.	SHEET DESCRIPTION
M4421	SUBSTRUCTURE DETAILS - 0° SKEW ABUTMENT & PIER PLANS, SUBSTRUCTURE NOTES
M4422	SUBSTRUCTURE DETAILS - 15° SKEW R. A. ABUTMENT & PIER PLANS, SUBSTRUCTURE NOTES
M4423	SUBSTRUCTURE DETAILS - 15° SKEW L. A. ABUTMENT & PIER PLANS, SUBSTRUCTURE NOTES
M4424	SUBSTRUCTURE DETAILS - 30° SKEW R. A. ABUTMENT & PIER PLANS, SUBSTRUCTURE NOTES
M4425	SUBSTRUCTURE DETAILS - 30° SKEW L. A. ABUTMENT & PIER PLANS, SUBSTRUCTURE NOTES
M4426	LONGITUDINAL SECTION - ALL BRIDGES WING DETAILS, ABUT. REINF. BAR LIST & SUPERSTR. NOTES
M4427	BARRIER RAIL DETAILS - ALL BRIDGES
M4428	SUPERSTRUCTURE DETAILS - 21 000 mm BRIDGE CROSS SECTION, REINF. LAYOUT & BAR LIST
M4429	SUPERSTRUCTURE DETAILS - 24 000 mm BRIDGE CROSS SECTION, REINF. LAYOUT & BAR LIST
M4430	SUPERSTRUCTURE DETAILS - 27 000 mm BRIDGE CROSS SECTION, REINF. LAYOUT & BAR LIST
M4431	SUPERSTRUCTURE DETAILS - 30 000 mm BRIDGE CROSS SECTION, REINF. LAYOUT & BAR LIST
M4432	SUPERSTRUCTURE DETAILS - 33 000 mm BRIDGE CROSS SECTION, REINF. LAYOUT & BAR LIST
M4433	SUPERSTRUCTURE DETAILS - 36 000 mm BRIDGE CROSS SECTION, REINF. LAYOUT & BAR LIST
M4434	SUPERSTRUCTURE DETAILS - 39 000 mm BRIDGE CROSS SECTION, REINF. LAYOUT & BAR LIST
M4435	CONCRETE PLACEMENT DIAGRAM - 0° SKEW TRANSVERSE REINFORCING STEEL LAYOUT
M4436	CONCRETE PLACEMENT DIAGRAM - 15° SKEW R.A. TRANSVERSE REINFORCING STEEL LAYOUT
M4437	CONCRETE PLACEMENT DIAGRAM - 15° SKEW L. A. TRANSVERSE REINFORCING STEEL LAYOUT
M4438	CONCRETE PLACEMENT DIAGRAM - 30° SKEW R. A. TRANSVERSE REINFORCING STEEL LAYOUT
M4439	CONCRETE PLACEMENT DIAGRAM - 30° SKEW L. A. TRANSVERSE REINFORCING STEEL LAYOUT

DIMENSIONS OF SLAB SECTIONS

BR. \ PT.	(1)	(2)	(3)	(4)	(5)	(6)	(7)	(8)	(9)	(10)	(11)
21 000	22 062	6400	8200	5291	3280	4920	5100	2108	1172	5482	1640
24 000	25 062	7300	9400	5951	3760	5640	5760	2348	1412	6142	1880
27 000	28 062	8200	10 600	6611	4240	6360	6420	2588	1652	6802	2120
30 000	31 062	9100	11 800	7271	4720	7080	7080	2828	1892	7462	2360
33 000	34 062	10 000	13 000	7931	5200	7800	7740	3068	2132	8122	2600
36 000	37 062	11 000	14 000	8731	5600	8400	8540	3268	2332	8922	2800
39 000	40 062	12 000	15 000	9531	6000	9000	9340	3468	2532	9722	3000

DIMENSIONS OF SLAB SECTIONS

BR. \ PT.	(1)	(2)	(3)	(4)	(5)	(6)	(7)	(8)	(9)	(10)	(11)
21 000	21 952	6400	8200	5236	3280	4920	5236	1768	1512	5236	1640
24 000	24 952	7300	9400	5896	3760	5640	5896	2008	1752	5896	1880
27 000	27 952	8200	10 600	6556	4240	6360	6556	2248	1992	6556	2120
30 000	30 952	9100	11 800	7216	4720	7080	7216	2488	2232	7216	2360
33 000	33 952	10 000	13 000	7876	5200	7800	7876	2728	2472	7876	2600
36 000	36 952	11 000	14 000	8676	5600	8400	8676	2928	2672	8676	2800
39 000	39 952	12 000	15 000	9476	6000	9000	9476	3128	2872	9476	3000

DIMENSIONS OF SLAB SECTIONS

BR. \ PT.	(1)	(2)	(3)	(4)	(5)	(6)	(7)
21 000	21 920	6400	8200	5220	3280	4920	1640
24 000	24 920	7300	9400	5880	3760	5640	1880
27 000	27 920	8200	10 600	6540	4240	6360	2120
30 000	30 920	9100	11 800	7200	4720	7080	2360
33 000	33 920	10 000	13 000	7860	5200	7800	2600
36 000	36 920	11 000	14 000	8660	5600	8400	2800
39 000	39 920	12 000	15 000	9460	6000	9000	3000

ABUT. & PIER REACTIONS FOR SLAB BRIDGES

BRIDGE	ABUTMENT REACTION (kN)			PIER REACTION (kN)			
	[1]DEAD LOAD	LIVE LOAD	TOTAL	[2]DEAD LOAD	LIVE LOAD	IMPACT	TOTAL
21 000	1057	509	1566	1348	684	205	2237
24 000	1121	518	1639	1592	720	216	2528
27 000	1194	535	1729	1867	746	224	2837
30 000	1276	559	1835	2184	765	230	3179
33 000	1362	582	1944	2501	780	234	3515
36 000	1484	604	2088	2896	790	237	3923
39 000	1606	623	2229	3268	799	235	4302

[1]INCLUDES FORCE OF ABUTMENT FOOTINGS, BARRIER RAIL, FUTURE WEARING SURFACE, AND WINGS, AND IS BASED ON 30° SKEW.

[2]INCLUDES FORCE OF PIER CAP AND IS BASED ON 30° SKEW.

DESIGN CRITERIA

THE 3-SPAN CONTINUOUS CONCRETE SLAB STANDARDS FOR 13 200 mm ROADWAY ARE DESIGNED IN ACCORDANCE WITH THE AASHTO STANDARD SPECIFICATIONS FOR HIGHWAY BRIDGES, SERIES OF 1989, USING THE SERVICE LOAD DESIGN METHOD (ALLOWABLE STRESS DESIGN). ALLOWABLE STRESSES AND LOADING INFORMATION HAVE BEEN CONVERTED TO A METRIC VERSION.

CONCRETE f'c = 24 MPa
REINFORCING STEEL fs = 160 MPa (GRADE 400)
n=9 FOR TENSION STEEL
2n=18 FOR COMPRESSION STEEL

MS-18 LOADING OR AN ALTERNATE MILITARY LOADING OF TWO AXLES 1200 mm APART (107 kN EACH AXLE) PLUS 960 Pa FOR FUTURE WEARING SURFACE.

END SPAN LENGTH IS USED FOR "S" IN LIVE LOAD DISTRIBUTION FORMULA (E=1220+0.06S).

THE TOP 13 mm OF THE SLAB IS CONSIDERED TO BE AN INTEGRAL WEARING SURFACE. THE DEAD LOAD OF THE BARRIER RAIL IS SPREAD OVER THE ENTIRE SLAB.

THE DESIGN OF THE EDGE BEAM INCLUDES 25% OF THE RAIL FORCE TO BE CARRIED BY THE EDGE BEAM.

SLAB MOMENTS DUE TO PASSIVE EARTH PRESSURE ON THE ABUTMENTS ARE CONSIDERED IN GROUP IV LOADING @ 125%.

IF ROCK IS ENCOUNTERED LESS THAN 3.6 m BELOW BOTTOM OF ABUTMENT FOOTING, SPECIAL ANALYSIS MAY BE REQUIRED.

THESE STANDARDS ARE NOT DESIGNED SO THAT ADDITIONAL INTERIOR SPANS MAY BE ADDED WITHOUT CAUSING SOME OVERSTRESSES.

ALL DIMENSIONS IN MILLIMETERS (mm) UNLESS OTHERWISE NOTED OR SHOWN.

DATA SHEET FOR 13 200 mm ROADWAY SLAB BRIDGES

IOWA DEPARTMENT OF TRANSPORTATION - HIGHWAY DIVISION

HM4420.S01: THIS SHEET ISSUED 9-1-95.

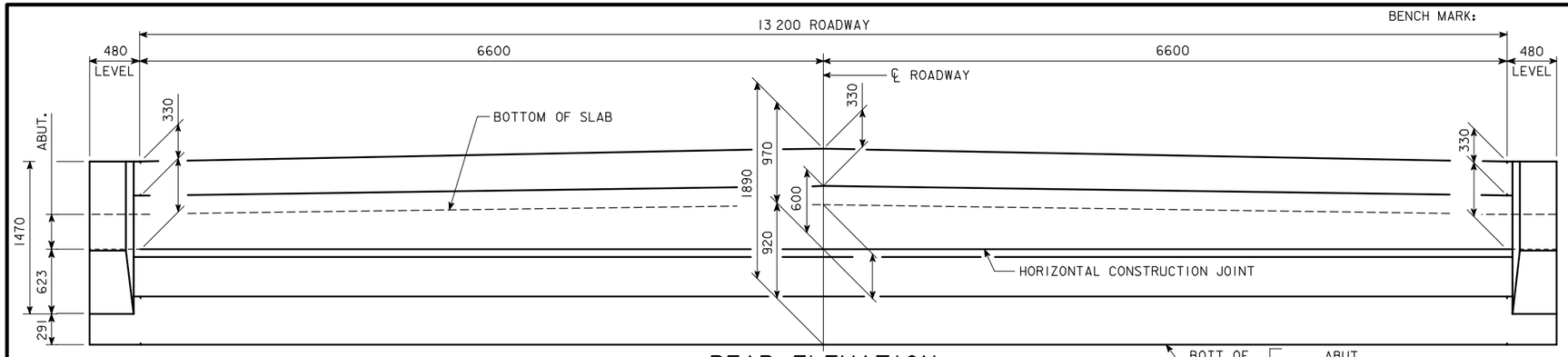

REAR ELEVATION

BOTT. OF FTG. ELEV. — ABUT. ABUT.

SUBSTRUCTURE NOTES:

MINIMUM CLEAR DISTANCE FROM FACE OF CONCRETE TO NEAR REINFORCING BAR IS TO BE 50 mm UNLESS OTHERWISE NOTED OR SHOWN.

THE TRANSVERSE REBARS ARE DETAILED WITH A SPLICE LAP AT THE CONTRACTOR'S OPTION, THIS LAP MAY BE ELIMINATED BY FURNISHING FULL LENGTH BARS WITH NO REDUCTION IN PAY MASS FOR SAME.

THE DESIGN BEARING FOR THE ABUTMENT PILES IS ?? TONS.
THE DESIGN BEARING FOR THE PIER PILES IS ?? TONS.

NOTE: BARRIER RAIL NOT SHOWN IN DETAILS.

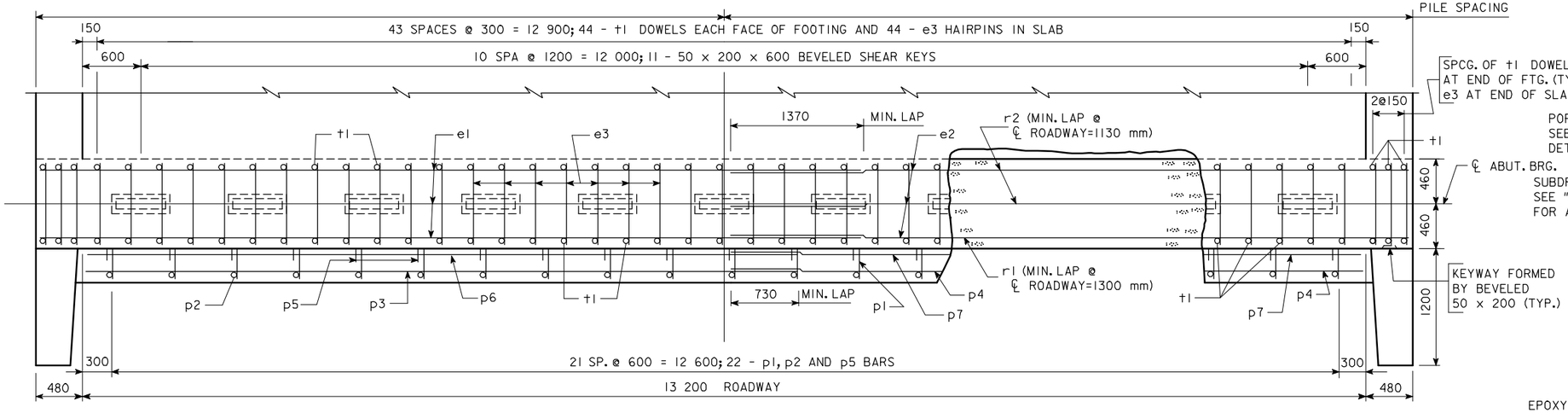

PLAN AT ABUTMENT

NOTE: WING REINFORCING AND RAIL NOT SHOWN.

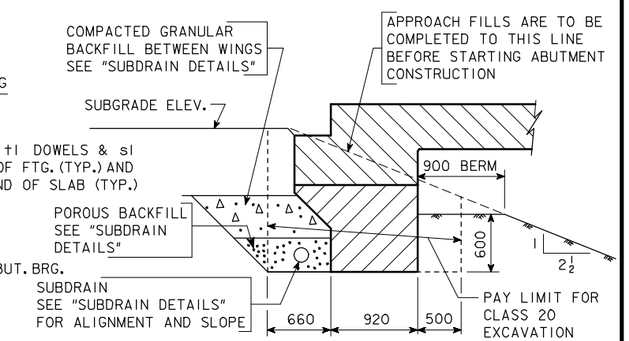

ABUTMENT EXCAVATION DETAILS

SECTION NORMAL TO ℄ ABUT. BRG.

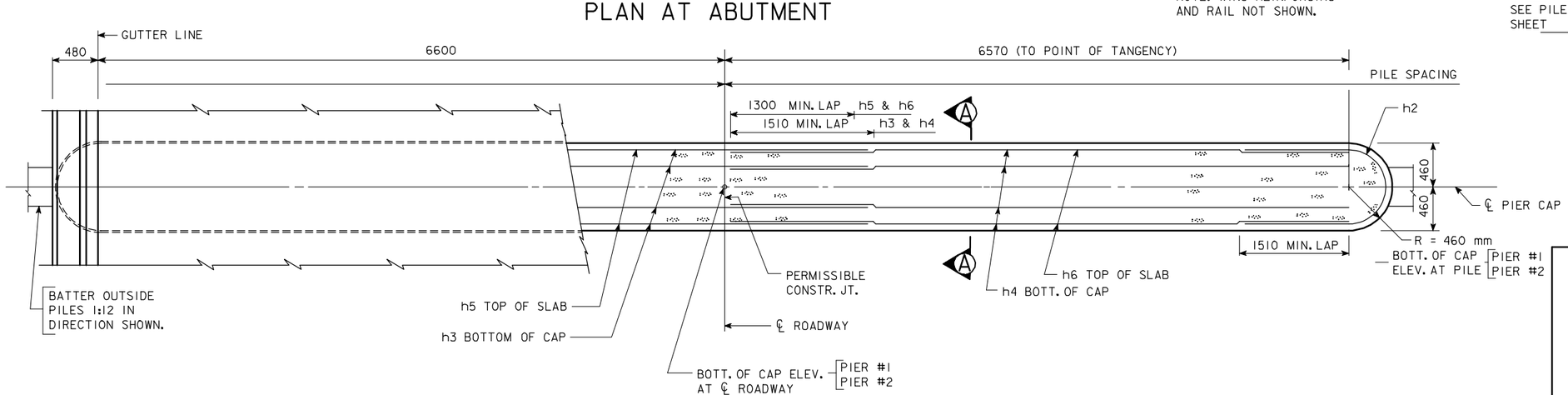

PIER PLAN

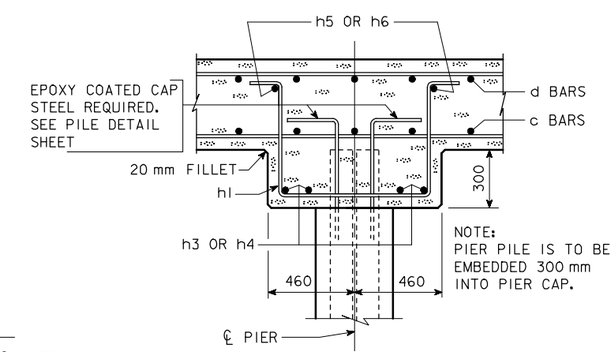

SECTION A-A

IOWA DEPARTMENT OF TRANSPORTATION - HIGHWAY DIVISION
DESIGN SHEET NO. ____ OF ____ FILE NO. _____ DESIGN NO. _____

DESIGN TEAM	CONCRETE SLAB, SUBSTRUCTURE DETAILS - 13 200 mm ROADWAY - 0° SKEW	STANDARD SHEET M4421	COUNTY	PROJECT NUMBER	SHEET NUMBER

REVISED 07-05 - PAVING NOTCH EXTENDED TO INTERCEPT THE WINGS. LONGIT. BARS EXTENDED 50 mm CLEAR OF WINGS.
HM4421.SOI: THIS SHEET ISSUED 9-1-95.

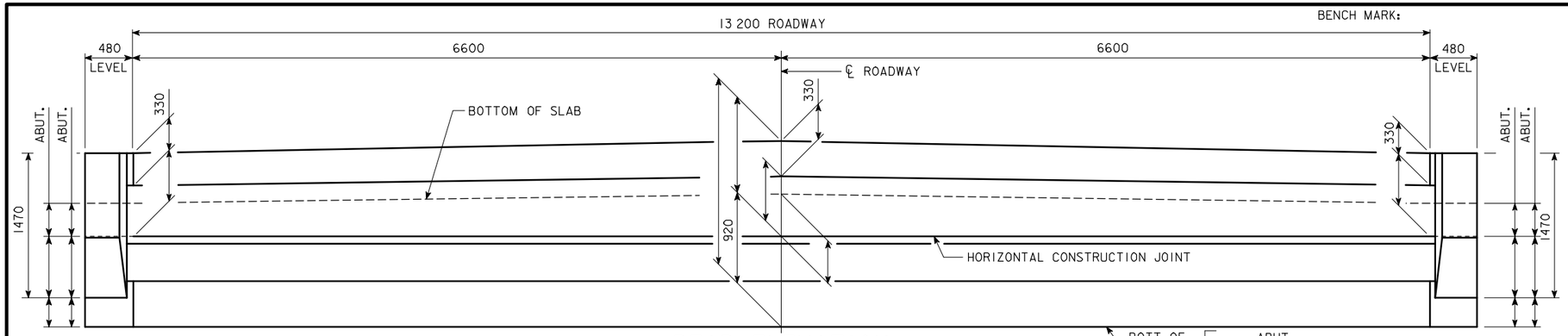

REAR ELEVATION

SUBSTRUCTURE NOTES:

MINIMUM CLEAR DISTANCE FROM FACE OF CONCRETE TO NEAR REINFORCING BAR IS TO BE 50 mm UNLESS OTHERWISE NOTED OR SHOWN.

THE TRANSVERSE REBARS ARE DETAILED WITH A SPLICE LAP AT THE CONTRACTOR'S OPTION, THIS LAP MAY BE ELIMINATED BY FURNISHING FULL LENGTH BARS WITH NO REDUCTION IN PAY MASS FOR SAME.

THE DESIGN BEARING FOR THE ABUTMENT PILES IS ?? TONS.
THE DESIGN BEARING FOR THE PIER PILES IS ?? TONS.

NOTE: BARRIER RAIL NOT SHOWN IN DETAILS.

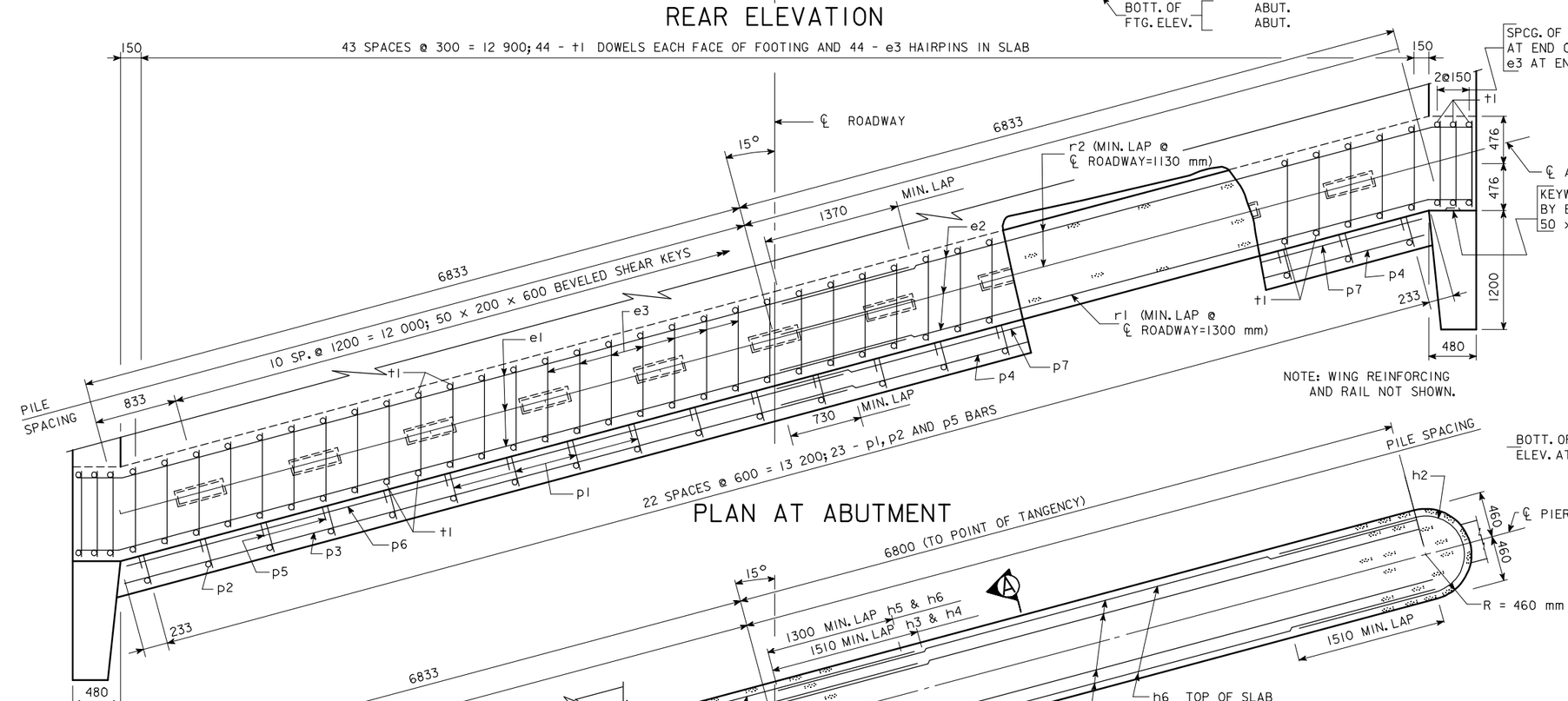

PLAN AT ABUTMENT

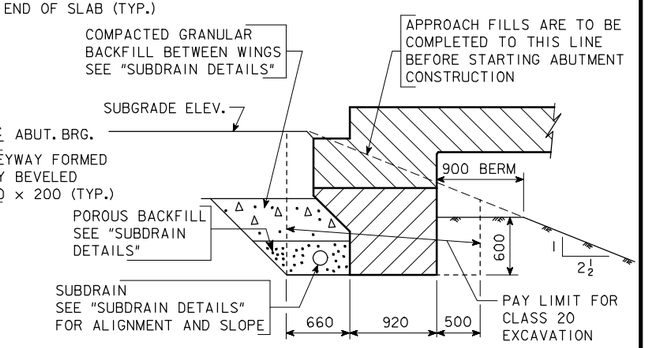

ABUTMENT EXCAVATION DETAILS

SECTION NORMAL TO ℄ ABUT. BRG.

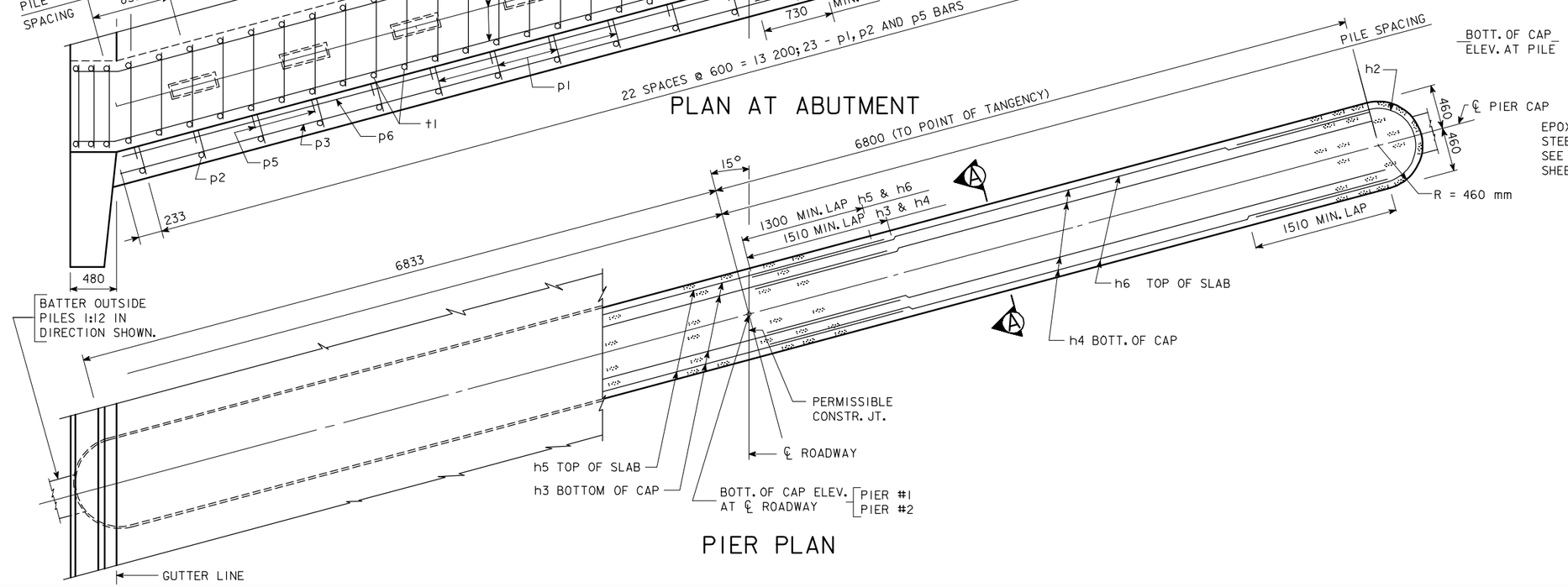

PIER PLAN

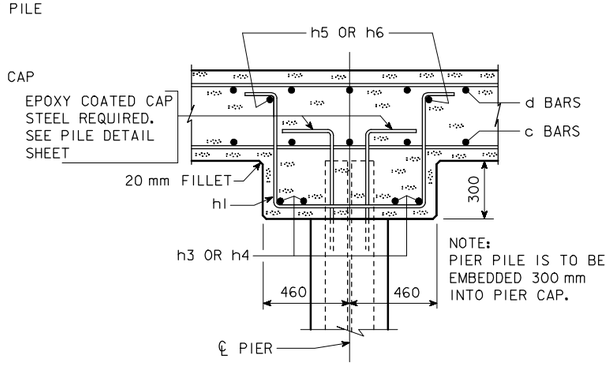

SECTION A-A

IOWA DEPARTMENT OF TRANSPORTATION - HIGHWAY DIVISION
DESIGN SHEET NO. ____ OF ____ FILE NO. _____ DESIGN NO. _____

REVISED 07-05 - PAVING NOTCH EXTENDED TO INTERCEPT THE WINGS. LONGIT. BARS EXTENDED 50 mm CLEAR OF WINGS.
HM4422.SOI: THIS SHEET ISSUED 9-1-95.

DESIGN TEAM	CONCRETE SLAB, SUBSTRUCTURE DETAILS - 13 200 mm ROADWAY - 15° SKEW R.A.	STANDARD SHEET M4422	COUNTY	PROJECT NUMBER	SHEET NUMBER

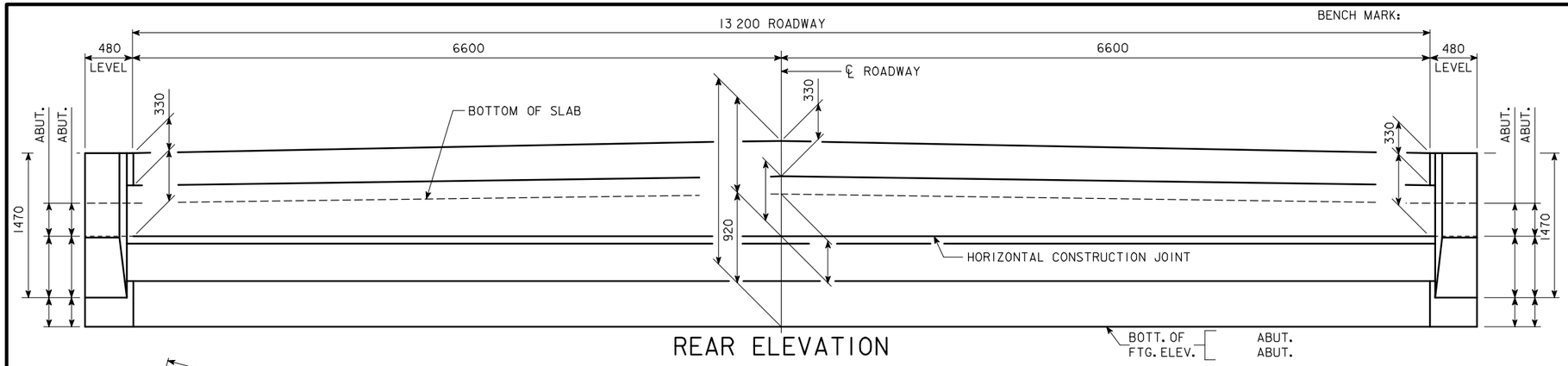

REAR ELEVATION

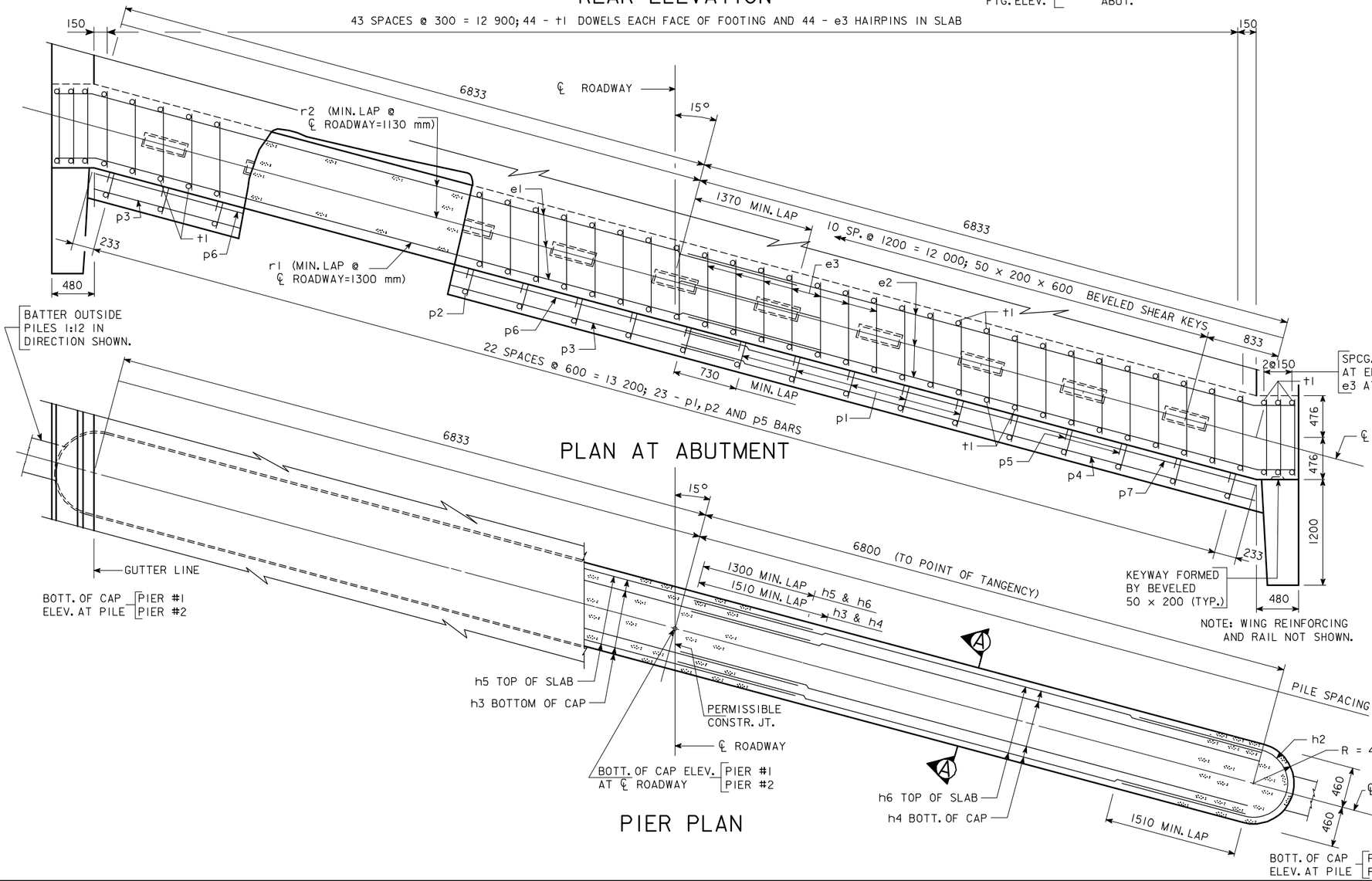

PLAN AT ABUTMENT

PIER PLAN

SUBSTRUCTURE NOTES:

MINIMUM CLEAR DISTANCE FROM FACE OF CONCRETE TO NEAR REINFORCING BAR IS TO BE 50 mm UNLESS OTHERWISE NOTED OR SHOWN.

THE TRANSVERSE REBARS ARE DETAILED WITH A SPLICE LAP AT THE CONTRACTOR'S OPTION, THIS LAP MAY BE ELIMINATED BY FURNISHING FULL LENGTH BARS WITH NO REDUCTION IN PAY MASS FOR SAME.

THE DESIGN BEARING FOR THE ABUTMENT PILES IS ?? TONS.
THE DESIGN BEARING FOR THE PIER PILES IS ?? TONS.

NOTE: BARRIER RAIL NOT SHOWN IN DETAILS.

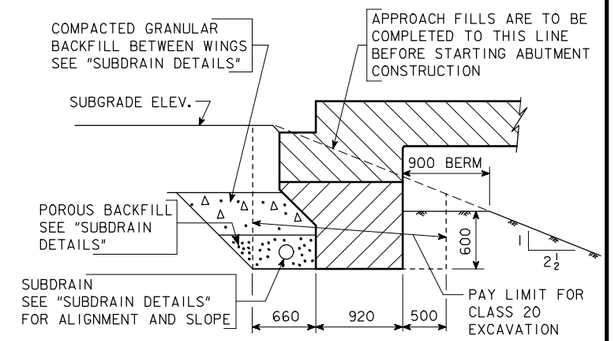

ABUTMENT EXCAVATION DETAILS

SECTION NORMAL TO ℄ ABUT. BRG.

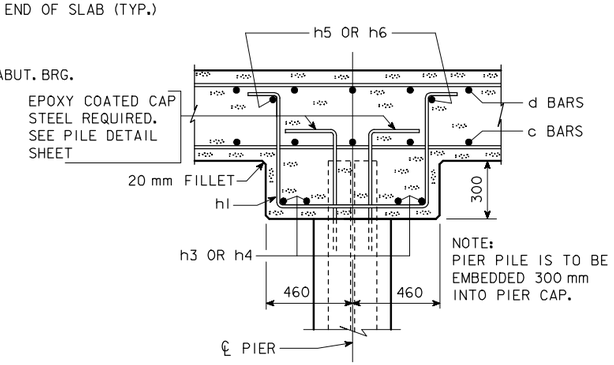

SECTION A-A

IOWA DEPARTMENT OF TRANSPORTATION - HIGHWAY DIVISION
DESIGN SHEET NO. ____ OF ____ FILE NO. _____ DESIGN NO. _____

REVISED 07-05 - PAVING NOTCH EXTENDED TO INTERCEPT THE WINGS. LONGIT. BARS EXTENDED 50 mm CLEAR OF WINGS.
HM4423.SOI: THIS SHEET ISSUED 9-1-95.

DESIGN TEAM	CONCRETE SLAB, SUBSTRUCTURE DETAILS - 13 200 mm ROADWAY - 15° SKEW L.A.	STANDARD SHEET M4423	COUNTY	PROJECT NUMBER	SHEET NUMBER

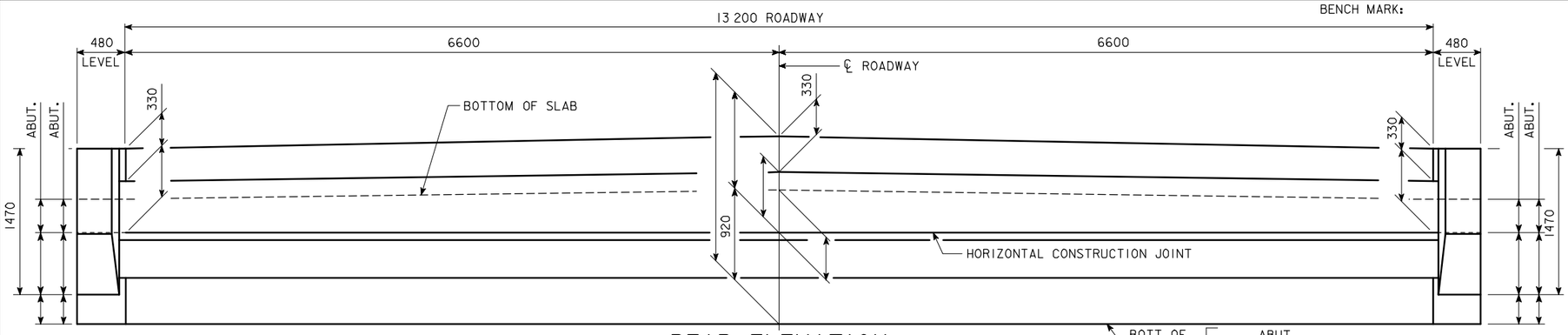

REAR ELEVATION

SUBSTRUCTURE NOTES:

MINIMUM CLEAR DISTANCE FROM FACE OF CONCRETE TO NEAR REINFORCING BAR IS TO BE 50 mm UNLESS OTHERWISE NOTED OR SHOWN.

THE TRANSVERSE REBARS ARE DETAILED WITH A SPLICE LAP AT THE CONTRACTOR'S OPTION, THIS LAP MAY BE ELIMINATED BY FURNISHING FULL LENGTH BARS WITH NO REDUCTION IN PAY MASS FOR SAME.

THE DESIGN BEARING FOR THE ABUTMENT PILES IS ?? TONS.
THE DESIGN BEARING FOR THE PIER PILES IS ?? TONS.

NOTE: BARRIER RAIL NOT SHOWN IN DETAILS.

ABUTMENT EXCAVATION DETAILS

SECTION NORMAL TO ℄ ABUT. BRG.

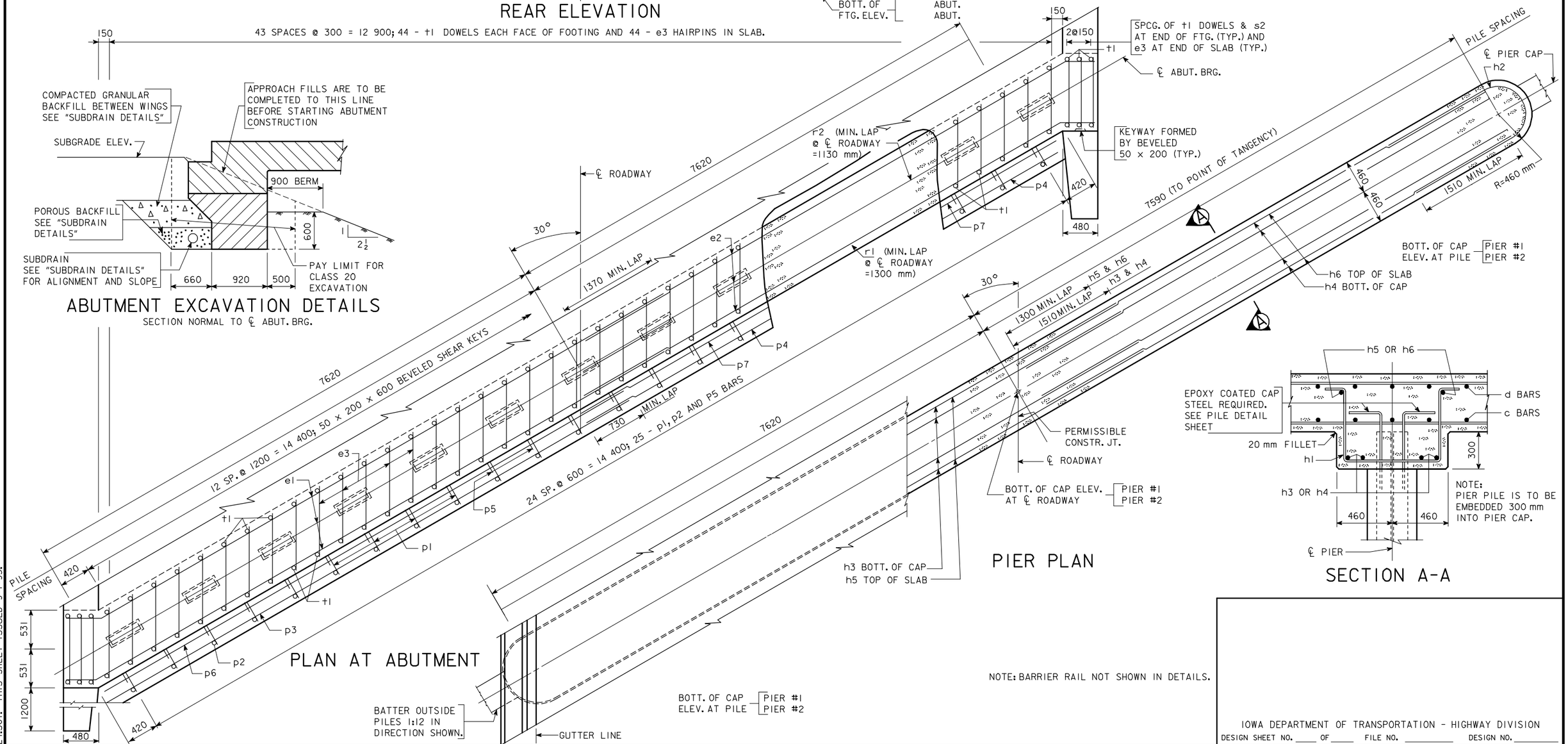

PLAN AT ABUTMENT

PIER PLAN

SECTION A-A

NOTE: BARRIER RAIL NOT SHOWN IN DETAILS.

IOWA DEPARTMENT OF TRANSPORTATION - HIGHWAY DIVISION
DESIGN SHEET NO. ____ OF ____ FILE NO. _____ DESIGN NO. _____

REVISED 07-05 - PAVING NOTCH EXTENDED TO INTERCEPT THE WINGS. LONGIT. BARS EXTENDED 50 mm CLEAR OF WINGS.
HM4424.SOI: THIS SHEET ISSUED 9-1-95.

DESIGN TEAM	CONCRETE SLAB, SUBSTRUCTURE DETAILS - 13 200 mm ROADWAY - 30° SKEW R.A.	STANDARD SHEET M4424	COUNTY	PROJECT NUMBER	SHEET NUMBER

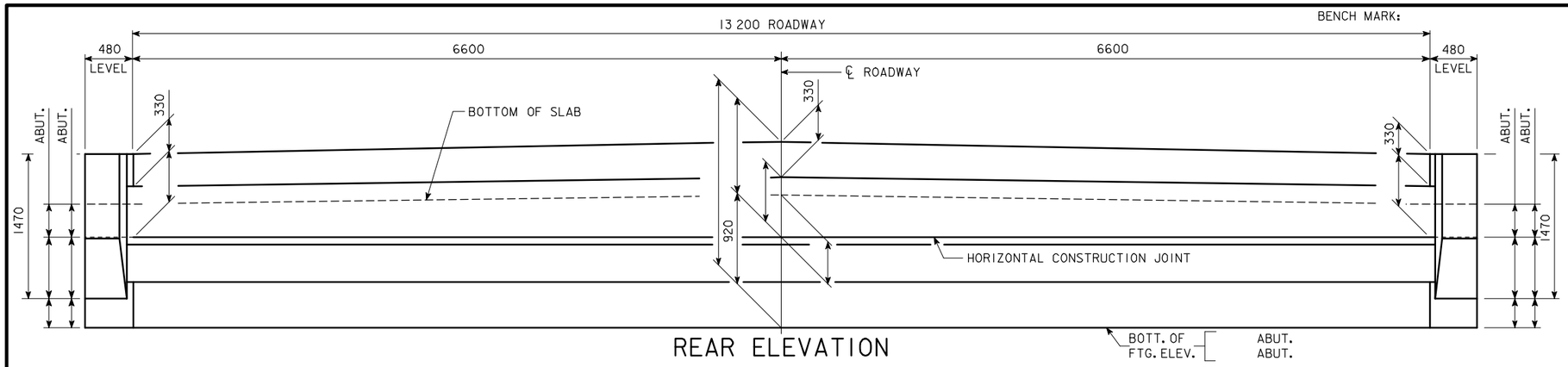

REAR ELEVATION

SUBSTRUCTURE NOTES:

MINIMUM CLEAR DISTANCE FROM FACE OF CONCRETE TO NEAR REINFORCING BAR IS TO BE 50 mm UNLESS OTHERWISE NOTED OR SHOWN.

THE TRANSVERSE REBARS ARE DETAILED WITH A SPLICE LAP AT THE CONTRACTOR'S OPTION, THIS LAP MAY BE ELIMINATED BY FURNISHING FULL LENGTH BARS WITH NO REDUCTION IN PAY MASS FOR SAME.

THE DESIGN BEARING FOR THE ABUTMENT PILES IS ?? TONS.
THE DESIGN BEARING FOR THE PIER PILES IS ?? TONS.

NOTE: BARRIER RAIL NOT SHOWN IN DETAILS.

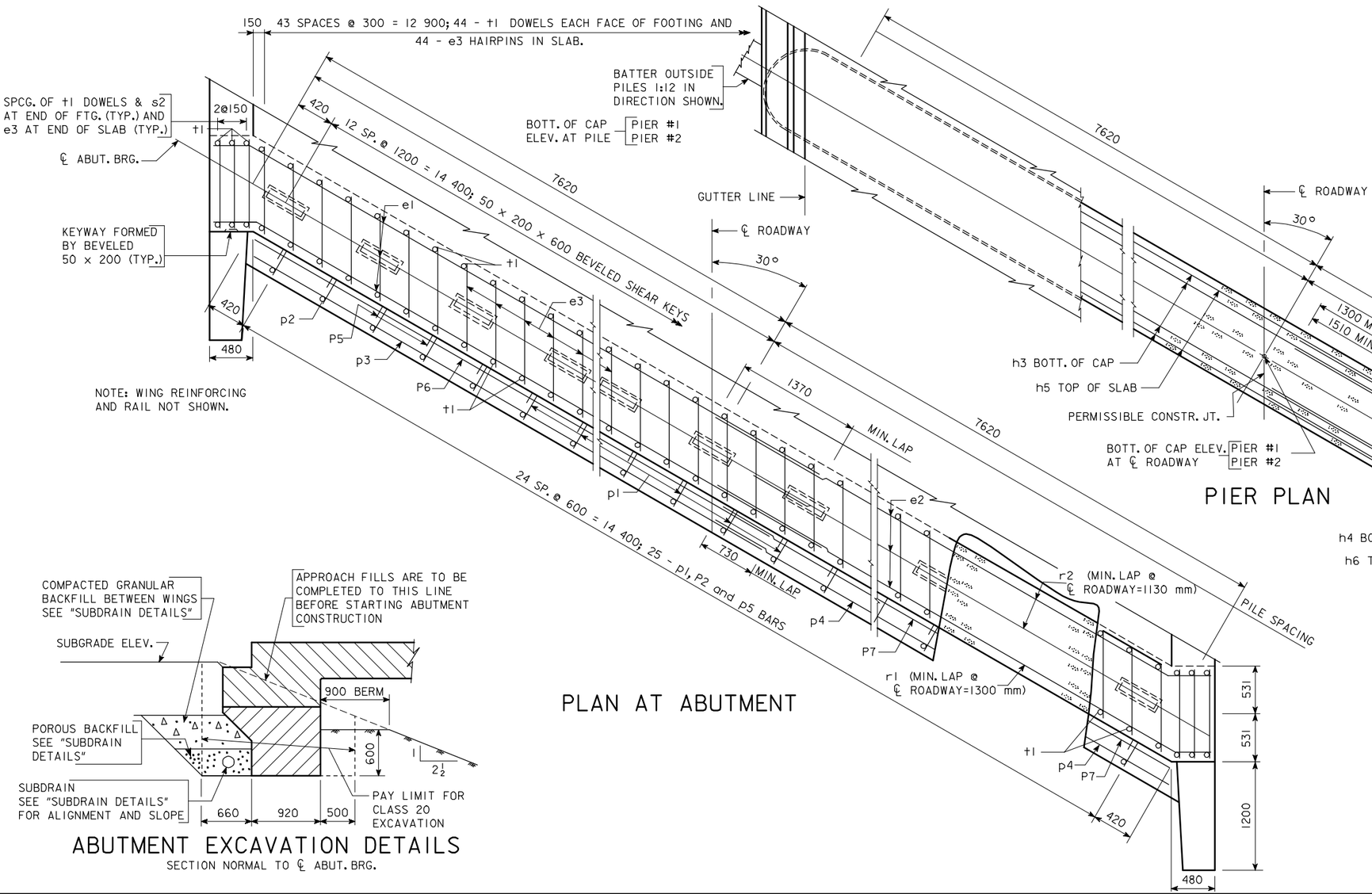

PLAN AT ABUTMENT

PIER PLAN

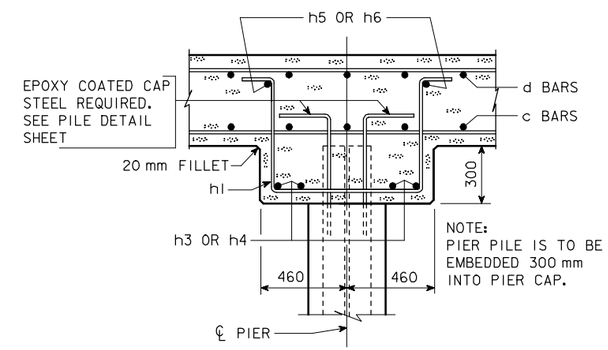

NOTE:
PIER PILE IS TO BE EMBEDDED 300 mm INTO PIER CAP.

SECTION A-A

ABUTMENT EXCAVATION DETAILS

SECTION NORMAL TO ℄ ABUT. BRG.

IOWA DEPARTMENT OF TRANSPORTATION - HIGHWAY DIVISION

DESIGN SHEET NO. ____ OF ____ FILE NO. _____ DESIGN NO. _____

DESIGN TEAM	CONCRETE SLAB, SUBSTRUCTURE DETAILS - 13 200 mm ROADWAY - 30° SKEW L.A.	STANDARD SHEET M4425	COUNTY	PROJECT NUMBER	SHEET NUMBER

REVISED 07-05 - PAVING NOTCH EXTENDED TO INTERCEPT THE WINGS. LONGIT. BARS EXTENDED 50 mm CLEAR OF WINGS.
HM4425.SOI: THIS SHEET ISSUED 9-1-95.

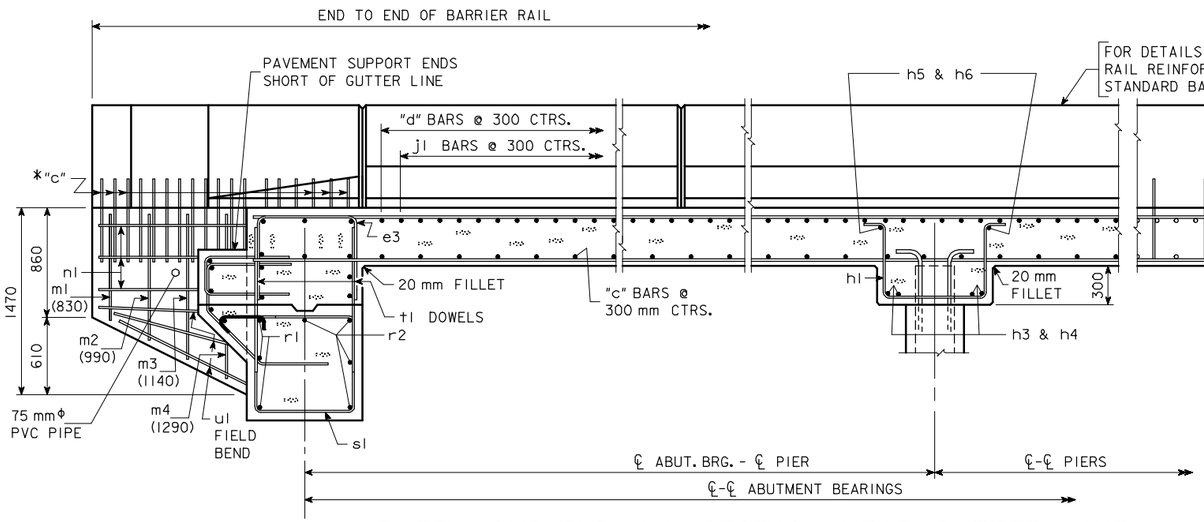

PART LONGITUDINAL SECTION NEAR GUTTER LINE

NOTE:
PLUG 75 mm PVC PIPE WITH EXPANDING FOAM PRIOR TO BACKFILLING BEHIND ABUTMENTS.

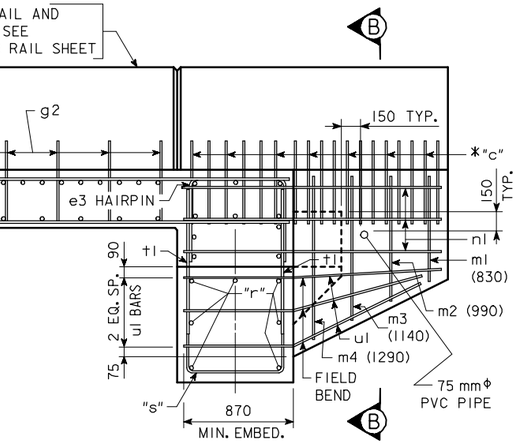

PART ELEVATION

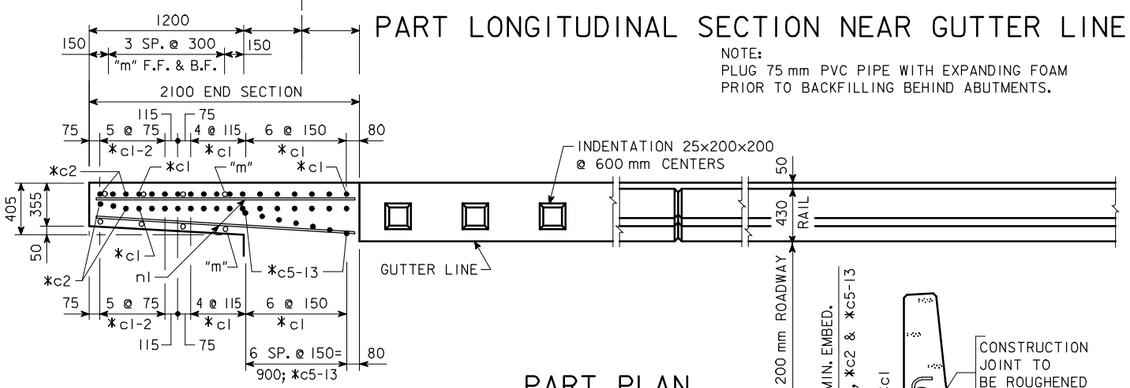

PART PLAN

(END SECTION OF RAIL NOT SHOWN)

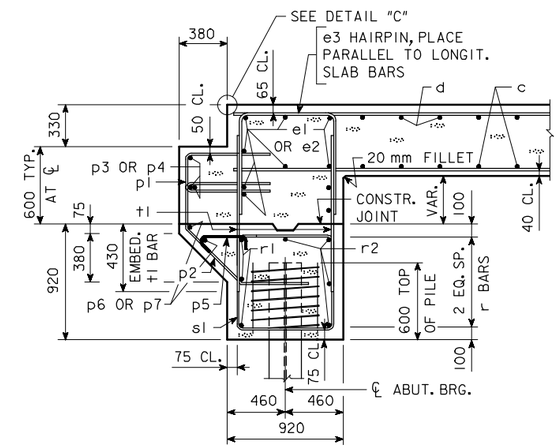

SECTION NORMAL TO ABUTMENT AT ℄

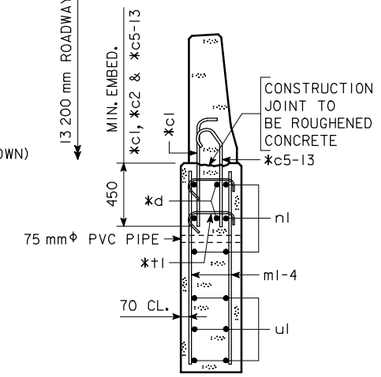

SECTION B-B

* NOTE: SEE END SECTION DETAILS IN THESE PLANS FOR DETAILS OF BARRIER RAIL END SECTION. REINFORCING BARS "c1", "c2", "c5-13", "d" & "t1" ARE INCLUDED IN THE SUPERSTRUCTURE QUANTITIES.

NOTE: "m1-4" & "n1" BARS ARE INCLUDED IN SUPERSTRUCTURE BAR LIST. "c", "d" & "t1" BARS ARE INCLUDED IN BARRIER RAIL BAR LIST.

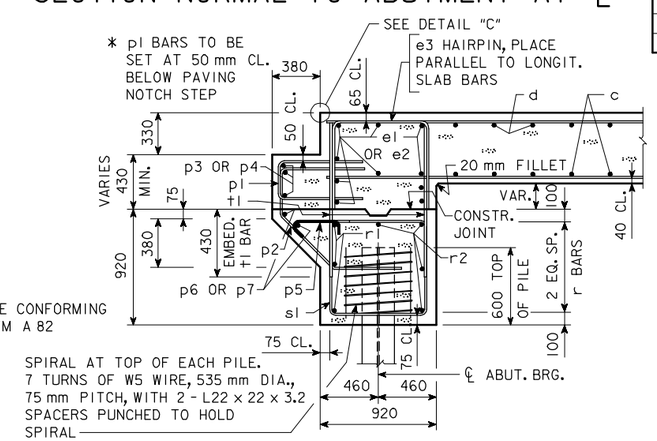

NOTE:
W5 WIRE CONFORMING TO ASTM A 82

SECTION NORMAL TO ABUTMENT NEAR GUTTERLINE

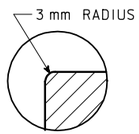

DETAIL "C"

SUPERSTRUCTURE NOTES:

THIS BRIDGE IS DESIGNED FOR MS-18 LOADING PLUS 960 Pa FOR FUTURE WEARING SURFACE.

THE BRIDGE FLOOR AS SHOWN INCLUDES 13 mm INTEGRAL WEARING SURFACE. MINIMUM CLEAR DISTANCE FROM FACE OF CONCRETE TO NEAR REINFORCING BAR IS TO BE 50 mm UNLESS OTHERWISE NOTED OR SHOWN.

ALL EXPOSED CORNERS OF 90° OR SHARPER ARE TO BE FILLETED WITH A 20 mm DRESSED AND BEVELED STRIP.

SOME OF THE ABUTMENT REINFORCING BARS SHALL BE EPOXY COATED. (SEE ABUTMENT BAR LIST ON THIS SHEET.)

THE TRANSVERSE REBARS ARE DETAILED WITH A SPLICE LAP. AT THE CONTRACTOR'S OPTION, THIS LAP MAY BE ELIMINATED BY FURNISHING FULL LENGTH BARS WITH NO REDUCTION IN PAY WEIGHT FOR SAME.

TOP MAT OF REINFORCING STEEL IS TO BE SUPPORTED BY INDIVIDUAL METAL BAR CHAIRS SPACED AT NOT MORE THAN 900 mm CENTERS LONGITUDINALLY AND TRANSVERSELY. THE BOTTOM MAT OF REINFORCING STEEL IS TO BE SUPPORTED BY INDIVIDUAL METAL BAR CHAIRS SPACED AT NOT MORE THAN 900 mm CENTERS LONGITUDINALLY AND TRANSVERSELY, OR BY CONTINUOUS ROWS OF METAL HIGH CHAIRS OR SLAB BOLSTERS SPACED 1200 mm APART. BAR CHAIRS SUPPORTING SLAB REINFORCING STEEL ARE TO BE EPOXY COATED.

THE CONCRETE SLAB IS TO BE PLACED WITH A MINIMUM OF CONSTRUCTION JOINTS. PROCEDURES FOR PLACING SLAB CONCRETE SHALL BE SUBMITTED FOR APPROVAL TOGETHER WITH A STATEMENT OF THE PROPOSED METHOD AND EVIDENCE THAT THE CONTRACTOR POSSESSES THE NECESSARY EQUIPMENT AND FACILITIES TO ACCOMPLISH THE REQUIRED RESULT. SLAB FALSEWORK SHALL BE REMOVED PRIOR TO CONSTRUCTION OF THE BARRIER RAILS, UNLESS SLAB CONSTRUCTION IS STAGED. SLAB FALSEWORK SHALL NOT BE REMOVED UNTIL THE FULL WIDTH SLAB HAS BEEN PLACED AND HAS ATTAINED THE AGE AND STRENGTH REQUIRED BY THE STANDARD SPECIFICATIONS.

NOTE THE LOCATION/RELATIONSHIP OF e1 AND e2 BARS IN THE BACKFACE OF THE DIAPHRAGM WITH THE p1 AND p2 BARS SHALL BE MAINTAINED AS THE DIAPHRAGM CHANGES DEPTH.

REINFORCING BAR LIST-ONE ABUTMENT

	MARK	SIZE	LOCATION	SHAPE	NO.	LENGTH	MASS
EPOXY-COATED	p2	15	PAVING SUPPORT, TRANSV.			2850	
	p5	10	PAVING SUPPORT, TRANSV.			560	
	p6	15	PAVING SUPPORT, LONGIT., SIDE "A"	—	4		
	p7	15	PAVING SUPPORT, LONGIT., SIDE "B"	—	4		
	r1	25	FOOTING, LONGIT., B.F.H.	—	6		
	s1	15	FOOTING, HOOPS			3380	
	s2	15	FOOTING, HOOPS @ ENDS		6		
	t1	20	FOOTING TO SLAB DOWELS	—	100	1090	257
			REINFORCING STEEL, EPOXY-COATED - TOTAL (kg)				
NON-COATED	r2	25	FOOTING, LONGIT., F.F.H.	—	8		
	u1	15	WING, LONGITUDINAL	—	12	2030	38
			PILE SPIRAL - SIZE W5 WIRE AT 3 kg/SPIRAL			12 000	
			SPIRAL SPACERS L22x22x3.2 (0.6 kg/SPACER)	—		560	
			REINFORCING STEEL, NON-COATED - TOTAL (kg)				

BENT BAR DETAILS

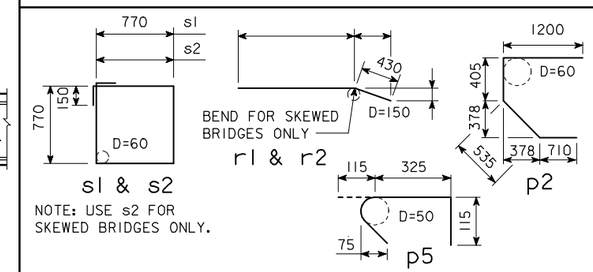

NOTE: ALL DIMENSIONS ARE OUT TO OUT. D=PIN DIAMETER.

ESTIMATED QUANTITIES-TWO ABUTMENTS

ITEM		UNITS	QUANTITY
STRUCTURAL CONCRETE (BRIDGE)		m^3	
REINFORCING STEEL, EPOXY-COATED		kg	
REINFORCING STEEL		kg	
CLASS 20 EXCAVATION		m^3	
	FURNISH	m	
	DRIVE	m	

IOWA DEPARTMENT OF TRANSPORTATION - HIGHWAY DIVISION

DESIGN SHEET NO. ____ OF ____ FILE NO. _____ DESIGN NO. _____

REVISED 07-05 - 75 mm PVC PIPE ADDED TO WINGS AND NOTE.
HM4426.SOI: THIS SHEET ISSUED 9-1-95.

DESIGN TEAM	CONCRETE SLAB, LONGIT. SECTION - 13 200 mm ROADWAY	STANDARD SHEET M4426	COUNTY	PROJECT NUMBER	SHEET NUMBER

24-JAN-2006 15:00 ajeffer W:\Projects\0000006002\BRFinal\MetricCCSBridges.dgn m4426

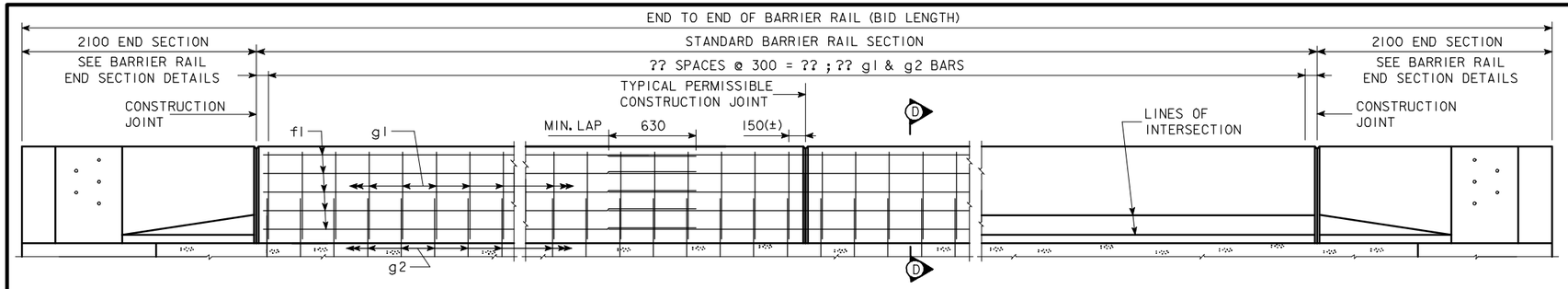

ELEVATION OF BARRIER RAIL

EPOXY COATED REINFORCING STEEL - TWO RAILS

SECTION	MARK	SIZE	LOCATION	SHAPE	NUMBER	LENGTH	MASS
2 STANDARD SECTIONS	g1	15	RAIL, VERTICAL			1750	
	g2	15	RAIL TO SLAB				
	f1	15	RAIL, LONGITUDINAL				
	BARRIER RAIL END SECTION				4 AT 172 kg.		688
	TOTAL MASS (kg) OF RE-BAR IN RAIL (INCLUDE WITH SUPERSTRUCTURE REINFORCING)					TOTAL (kg.)	

BENT BAR DETAILS

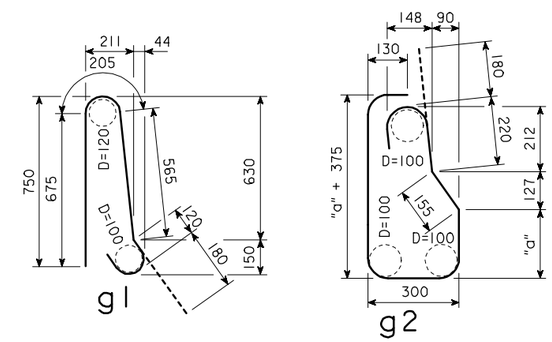

NOTE:
ALL DIMENSIONS ARE OUT TO OUT. D = PIN DIAMETER.
D = 100 mm UNLESS SHOWN.

g2 BARS		
BRIDGE	"a"	LENGTH
21 000	355	2070
24 000	375	2110
27 000	400	2160
30 000	430	2220
33 000	455	2270
36 000	495	2350
39 000	525	2410

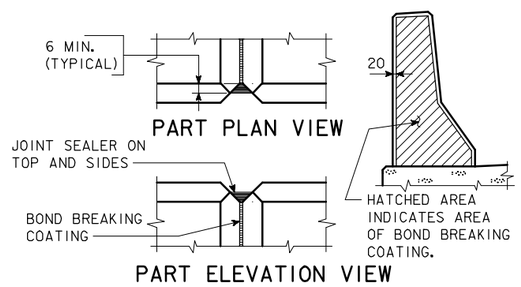

BARRIER RAIL JOINT DETAILS

METERS OF BARRIER RAIL

BRIDGE LENGTH		21 000	24 000	27 000	30 000	33 000	36 000	39 000
CONCRETE BARRIER RAIL (m)	0° SKEW	48.64	54.64	60.64	66.64	72.64	78.64	84.64
	15° SKEW	48.70	54.70	60.70	66.70	72.70	78.70	84.70
	30° SKEW	48.92	54.92	60.92	66.92	72.92	78.92	84.92

CONCRETE QUANTITY= ?? m^3
(INCLUDES 4 END SECTIONS AT 0.47 m^3 EACH)

BARRIER RAIL NOTES:

MINIMUM CLEAR DISTANCE FROM FACE OF CONCRETE TO NEAR REINFORCING BAR IS TO BE 50 mm UNLESS OTHERWISE NOTED OR SHOWN.

ALL EXPOSED CORNERS OF 90° OR SHARPER ARE TO BE FILLETED WITH A 20 mm DRESSED AND BEVELED STRIP.

THE STANDARD SECTION OF BARRIER RAIL MAY BE PLACED CONTINUOUSLY OR IN SECTIONS. THERE SHALL BE AT LEAST 6000 mm BETWEEN CONSTRUCTION JOINTS. CONSTRUCTION JOINT CONTACT SURFACES ARE TO BE COATED WITH AN APPROVED BOND BREAKER. THE JOINT SEALER SHALL BE LIGHT GRAY NONSAG LATEX CAULKING SEALER MARKETED FOR OUTDOOR USE. NO TESTING OR CERTIFICATION REQUIRED.

COST OF THE JOINT SEALER AND BOND BREAKER SHALL BE INCLUDED IN THE PRICE BID FOR BARRIER RAIL.

THE CONCRETE BARRIER RAIL IS TO BE BID ON A METRIC BASIS. THE NUMBER OF METERS OF BARRIER RAIL INSTALLED WILL BE PAID FOR AT THE CONTRACT PRICE PER METER BASED ON PLAN QUANTITIES. PRICE BID FOR CONCRETE BARRIER RAILING SHALL BE FULL COMPENSATION FOR FURNISHING ALL MATERIAL, EXCLUDING REINFORCING STEEL, AND ALL OF THE EQUIPMENT AND LABOR REQUIRED TO ERECT THE RAIL IN ACCORDANCE WITH THESE PLANS AND CURRENT SPECIFICATIONS. IF CONDUIT IS REQUIRED IN THIS PLAN THE RIGID STEEL CONDUIT, JUNCTION BOXES AND FITTINGS INCLUDING LABOR AND ANY ADDITIONAL WORK TO DO THE INSTALLATION IS CONSIDERED INCIDENTAL TO THE COST OF THE RAILING.

ALL BARRIER RAIL REINFORCING STEEL IS TO BE INCLUDED WITH THE SUPERSTRUCTURE REINFORCING STEEL.

TOP OF BARRIER RAIL IS TO BE PARALLEL TO THEORETICAL ℄ GRADE.

LONGITUDINAL BARS ARE CONTINUOUS THRU PERMISSIBLE CONSTRUCTION JOINT.

CROSS SECTIONAL AREA OF THE STANDARD SECTION OF THE BARRIER RAIL = 0.263 m^2.

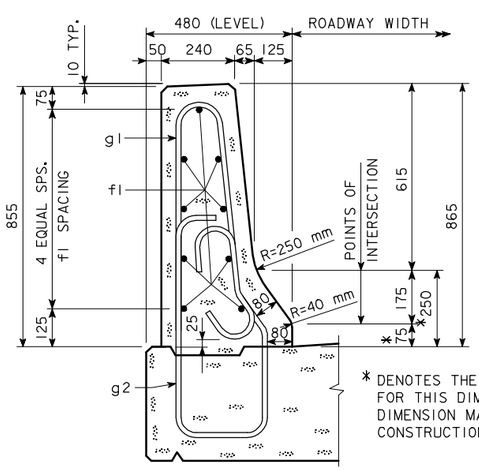

* DENOTES THE MAXIMUM VALUE FOR THIS DIMENSION. THIS DIMENSION MAY VARY DUE TO CONSTRUCTION INACCURACIES.

PART SECTION D-D

NOTE:
SEE BARRIER RAIL END SECTION WITH 1200 mm WING IN THESE PLANS FOR DETAILS NOT SHOWN ON THIS SHEET.

IOWA DEPARTMENT OF TRANSPORTATION - HIGHWAY DIVISION
DESIGN SHEET NO. ____ OF ____ FILE NO. _____ DESIGN NO. _____

REVISED - 09-01 BARRIER RAIL END SECTION DETAILS MOVED TO STD. SHEET M1017.
HM4427.S01: THIS SHEET ISSUED 9-1-95.

DESIGN TEAM	CONCRETE SLAB BARRIER RAIL - 13 200 mm ROADWAY	STANDARD SHEET M4427	COUNTY	PROJECT NUMBER	SHEET NUMBER

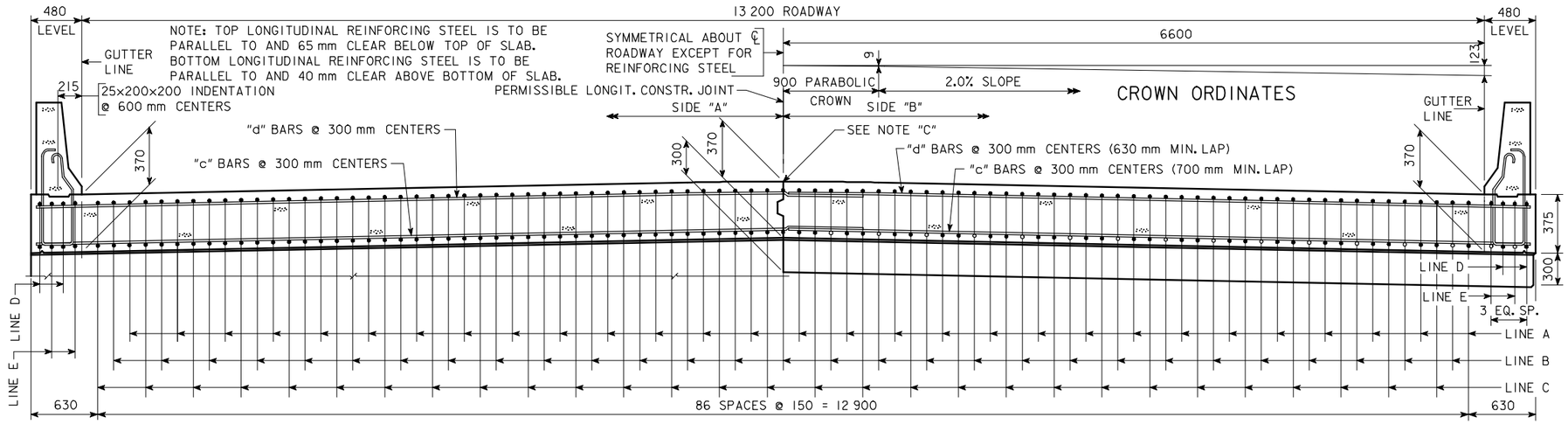

HALF SECTION NEAR ABUTMENT

NOTE "C": IF PERMISSIBLE LONGITUDINAL JOINT IS USED, BARS ON ℄ ROADWAY MAY BE SHIFTED TO CLEAR JOINT BY 25 mm.

SLAB CROSS-SECTIONAL AREA-SIDE "A" =	2.648	m^2
SLAB CROSS-SECTIONAL AREA-SIDE "B" =	2.648	m^2
BARRIER RAIL CROSS-SECTIONAL AREA-ONE RAIL =	0.263	m^2

HALF SECTION NEAR PIER

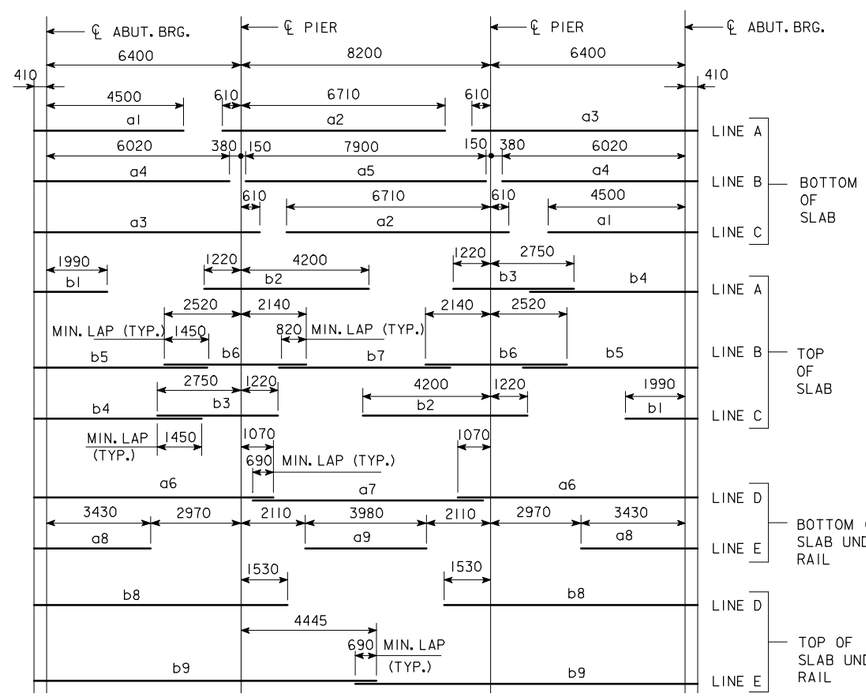

PLACEMENT FOR LONGITUDINAL REINFORCEMENT

* WING REINFORCING MAY BE UNCOATED

EPOXY COATED REINFORCING BAR LIST SUPERSTRUCTURE

MARK	SIZE	LOCATION	SHAPE	No.	LENGTH	MASS
a1	25	BOTT. OF SLAB, LONGIT.	——	58	4910	1118
a2	25	BOTT. OF SLAB, LONGIT.	——	58	7320	1666
a3	25	BOTT. OF SLAB, LONGIT.	——	58	7420	1689
a4	25	BOTT. OF SLAB, LONGIT.	——	58	6430	1464
a5	25	BOTT. OF SLAB, LONGIT.	——	29	7900	899
a6	25	BOTT. OF SLAB, LONGIT., AT RAIL	——	8	7880	247
a7	25	BOTT. OF SLAB, LONGIT., AT RAIL	——	4	7440	117
a8	25	BOTT. OF SLAB, LONGIT., AT RAIL	——	8	3840	121
a9	25	BOTT. OF SLAB, LONGIT., AT RAIL	——	4	3980	62
b1	25	TOP OF SLAB, LONGIT.	——	58	2400	546
b2	25	TOP OF SLAB, LONGIT.	——	58	5420	1234
b3	25	TOP OF SLAB, LONGIT.	——	58	3970	904
b4	25	TOP OF SLAB, LONGIT.	——	58	5510	1254
b5	25	TOP OF SLAB, LONGIT.	——	58	5740	1307
b6	25	TOP OF SLAB, LONGIT.	——	58	4660	1061
b7	20	TOP OF SLAB, LONGIT.	——	29	5560	380
b8	25	TOP OF SLAB, LONGIT., AT RAIL	——	8	8340	262
b9	25	TOP OF SLAB, LONGIT., AT RAIL	——	8	11 255	353
c1	20	BOTT. OF SLAB, TRANSV., SIDE "A"	——			
c2	20	BOTT. OF SLAB, TRANSV., SIDE "B"	——			
d1	15	TOP OF SLAB, TRANSV., SIDE "A"	——			
d2	15	TOP OF SLAB, TRANSV., SIDE "B"	——			
e1	25	SLAB, TRANSV., AT ABUT., SIDE "A"		20		
e2	25	SLAB, TRANSV., AT ABUT., SIDE "B"		20		
e3	20	SLAB, HAIRPINS, AT ABUT.	⊓	100		
h1	15	PIER CAP HOOPS	⊔		2140	
h2	25	PIER CAP ENDS	⊂	4	4200	66
h3	25	PIER CAP, BOTT., LONGIT.,SIDE "A"	——	8		
h4	25	PIER CAP, BOTT., LONGIT.,SIDE "B"	——	8		
h5	25	PIER CAP, TOP, LONGIT.,SIDE "A"	——	4		
h6	25	PIER CAP, TOP, LONGIT.,SIDE "B"	——	4		
j1	15	TOP OF SLAB, TRANSV., AT RAIL	——		1760	
* m1-4	15	WING, VERTICAL	——	32	SHOWN	53
* n1	15	WING, HORIZONTAL	——	24	2040	77
p1	15	PAVING SUPPORT, TRANSV.	⊏		2700	
p3	15	PAVING SUPPORT, LONGIT., SIDE "A"	——	6		
p4	15	PAVING SUPPORT, LONGIT., SIDE "B"	——	6		
BARRIER RAIL - SEE DESIGN SHEET ???						
REINFORCING STEEL EPOXY COATED - TOTAL - (kg)						

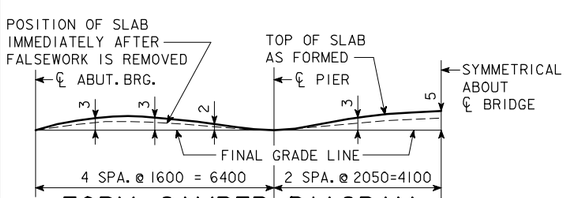

FORM CAMBER DIAGRAM

THIS DIAGRAM SHOWS THE FORM CAMBER REQUIRED TO COMPENSATE FOR THE ANTICIPATED ULTIMATE DEAD LOAD DEFLECTION. THE ABOVE DIMENSIONS DO NOT INCLUDE ANY ALLOWANCE FOR FORM DEFLECTION OR FALSEWORK SETTLEMENT.

BENT BAR DETAILS

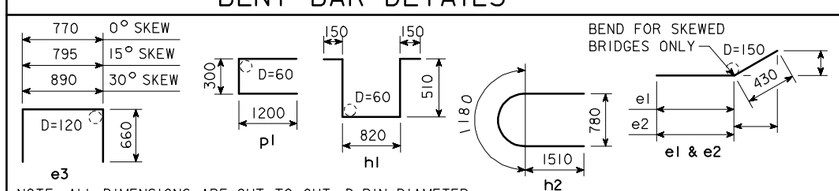

NOTE: ALL DIMENSIONS ARE OUT TO OUT. D=PIN DIAMETER.

ESTIMATED QUANT.-SUPERSTR.

ITEM		UNITS	QUANTITY
STRUCTURAL CONCRETE (BRIDGE)		m^3	
REINFORCING STEEL, EPOXY COATED		kg	
	FURNISH	m	
	DRIVE	m	

STRUCTURAL CONCRETE QUANTITY INCLUDES SLAB WITH INTEGRAL PIER CAPS AND WINGS. FOR TABULATION, SEE "CONCRETE PLACEMENT QUANTITIES-SUPERSTRUCTURE".

IOWA DEPARTMENT OF TRANSPORTATION - HIGHWAY DIVISION

DESIGN SHEET NO. ____ OF ____ FILE NO. _____ DESIGN NO. _____

REVISED 02-05 - PAVING NOTCH BENT BARS AND BAR LIST CHANGED.
HM4428.SOI: THIS SHEET ISSUED 9-1-95.

DESIGN TEAM	CONCRETE SLAB, SUPERSTRUCTURE DETAILS-13 200 mm ROADWAY-21 000 mm BRIDGE	STANDARD SHEET M4428	COUNTY	PROJECT NUMBER	SHEET NUMBER

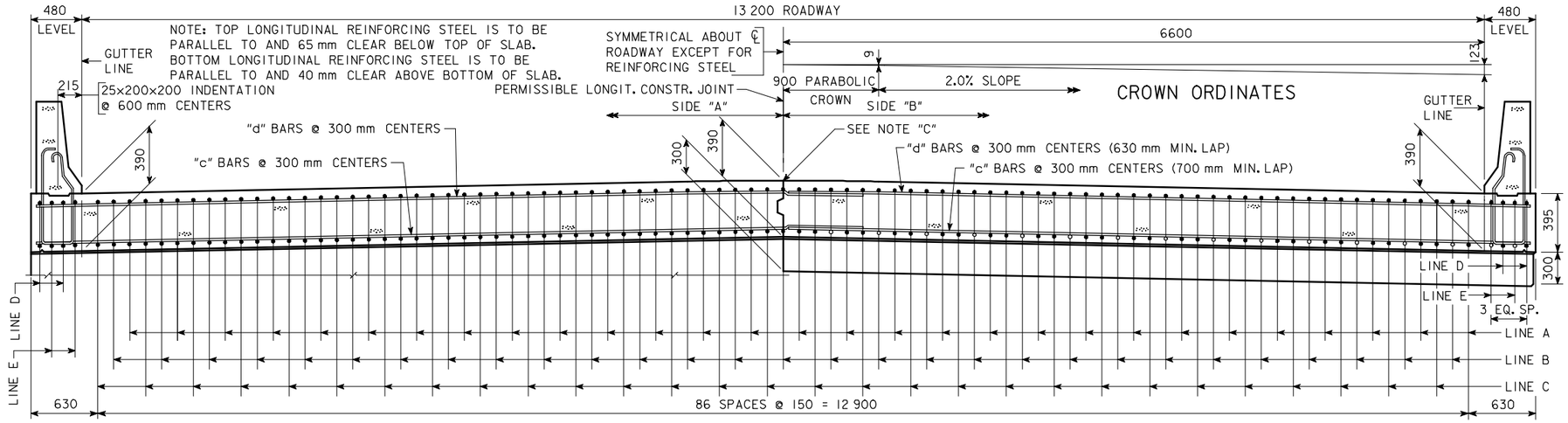

HALF SECTION NEAR ABUTMENT

NOTE "C": IF PERMISSIBLE LONGITUDINAL JOINT IS USED, BARS ON ℄ ROADWAY MAY BE SHIFTED TO CLEAR JOINT BY 25 mm.

SLAB CROSS-SECTIONAL AREA-SIDE "A" =	2.789	m^2
SLAB CROSS-SECTIONAL AREA-SIDE "B" =	2.789	m^2
BARRIER RAIL CROSS-SECTIONAL AREA-ONE RAIL =	0.268	m^2

HALF SECTION NEAR PIER

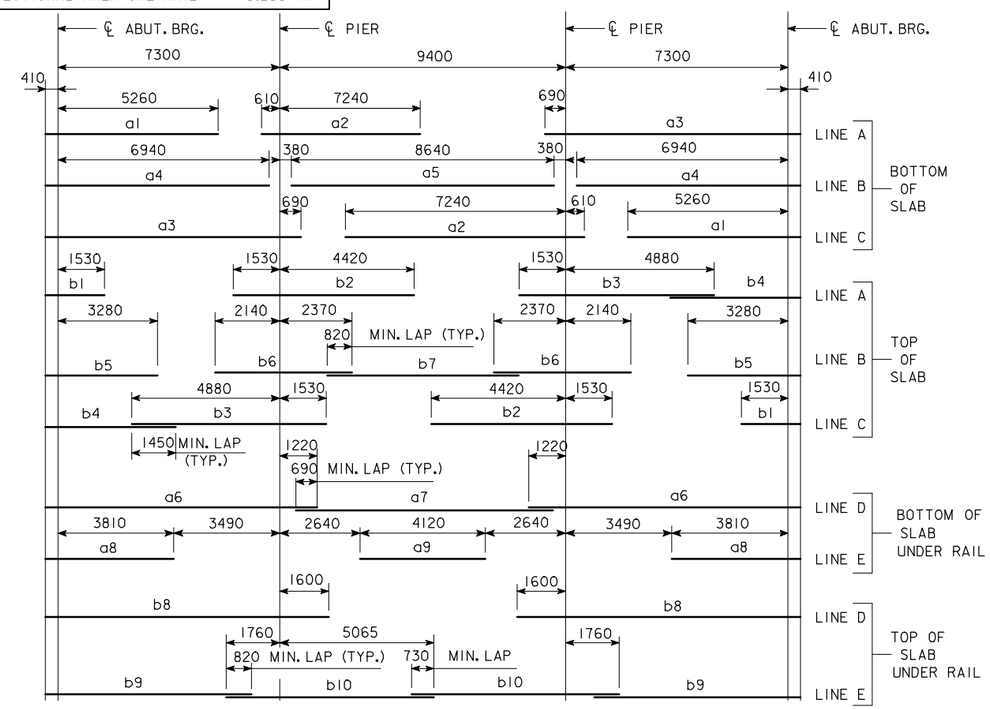

PLACEMENT FOR LONGITUDINAL REINFORCEMENT

* WING REINFORCING MAY BE UNCOATED

EPOXY COATED REINFORCING BAR LIST SUPERSTRUCTURE

MARK	SIZE	LOCATION	SHAPE	No.	LENGTH	MASS
a1	25	BOTT. OF SLAB, LONGIT.	——	58	5670	1291
a2	25	BOTT. OF SLAB, LONGIT.	——	58	7850	1787
a3	25	BOTT. OF SLAB, LONGIT.	——	58	8400	1912
a4	25	BOTT. OF SLAB, LONGIT.	——	58	7350	1673
a5	25	BOTT. OF SLAB, LONGIT.	——	29	8640	983
a6	25	BOTT. OF SLAB, LONGIT., AT RAIL	——	8	8930	280
a7	25	BOTT. OF SLAB, LONGIT., AT RAIL	——	4	8340	131
a8	25	BOTT. OF SLAB, LONGIT., AT RAIL	——	8	4220	133
a9	25	BOTT. OF SLAB, LONGIT., AT RAIL	——	4	4120	65
b1	20	TOP OF SLAB, LONGIT.	——	58	1940	265
b2	30	TOP OF SLAB, LONGIT.	——	58	5950	1896
b3	30	TOP OF SLAB, LONGIT.	——	58	6410	2043
b4	25	TOP OF SLAB, LONGIT.	——	58	4280	974
b5	25	TOP OF SLAB, LONGIT.	——	58	3690	840
b6	30	TOP OF SLAB, LONGIT.	——	58	4510	1437
b7	20	TOP OF SLAB, LONGIT.	——	29	6300	430
b8	25	TOP OF SLAB, LONGIT., AT RAIL	——	8	9310	292
b9	20	TOP OF SLAB, LONGIT., AT RAIL	——	8	6770	128
b10	25	TOP OF SLAB, LONGIT., AT RAIL	——	8	6825	214
c1	20	BOTT. OF SLAB, TRANSV., SIDE "A"	——			
c2	20	BOTT. OF SLAB, TRANSV., SIDE "B"	——			
d1	15	TOP OF SLAB, TRANSV., SIDE "A"	——			
d2	15	TOP OF SLAB, TRANSV., SIDE "B"	——			
e1	25	SLAB, TRANSV., AT ABUT., SIDE "A"		20		
e2	25	SLAB, TRANSV., AT ABUT., SIDE "B"		20		
e3	20	SLAB, HAIRPINS, AT ABUT.	⊓	100		
h1	15	PIER CAP HOOPS	⊔		2180	
h2	25	PIER CAP ENDS	⊂	4	4200	66
h3	25	PIER CAP, BOTT., LONGIT., SIDE "A"	——	8		
h4	25	PIER CAP, BOTT., LONGIT., SIDE "B"	——	8		
h5	25	PIER CAP, TOP, LONGIT., SIDE "A"	——	4		
h6	25	PIER CAP, TOP, LONGIT., SIDE "B"	——	4		
j1	15	TOP OF SLAB, TRANSV., AT RAIL	——		1680	
* m1-4	15	WING, VERTICAL	——	32	SHOWN	53
* n1	15	WING, HORIZONTAL	——	24	2040	77
p1	15	PAVING SUPPORT, TRANSV.	⊏		2700	
p3	15	PAVING SUPPORT, LONGIT., SIDE "A"	——	6		
p4	15	PAVING SUPPORT, LONGIT., SIDE "B"	——	6		
BARRIER RAIL - SEE DESIGN SHEET ???						
REINFORCING STEEL EPOXY COATED - TOTAL - (kg)						

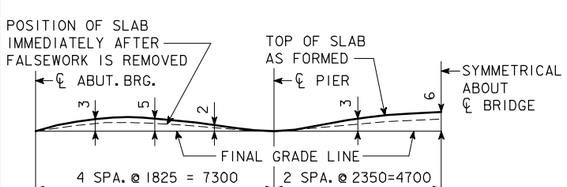

FORM CAMBER DIAGRAM

THIS DIAGRAM SHOWS THE FORM CAMBER REQUIRED TO COMPENSATE FOR THE ANTICIPATED ULTIMATE DEAD LOAD DEFLECTION. THE ABOVE DIMENSIONS DO NOT INCLUDE ANY ALLOWANCE FOR FORM DEFLECTION OR FALSEWORK SETTLEMENT.

BENT BAR DETAILS

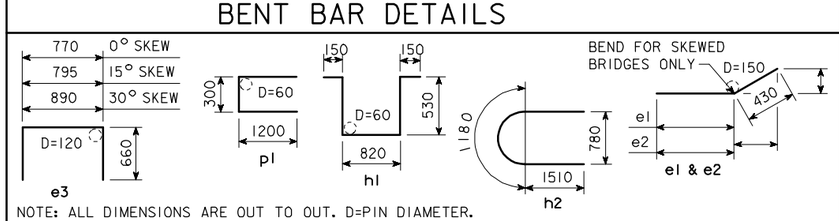

NOTE: ALL DIMENSIONS ARE OUT TO OUT. D=PIN DIAMETER.

ESTIMATED QUANT.-SUPERSTR.

ITEM		UNITS	QUANTITY
STRUCTURAL CONCRETE (BRIDGE)		m^3	
REINFORCING STEEL, EPOXY COATED		kg	
	FURNISH	m	
	DRIVE	m	

STRUCTURAL CONCRETE QUANTITY INCLUDES SLAB WITH INTEGRAL PIER CAPS AND WINGS. FOR TABULATION, SEE "CONCRETE PLACEMENT QUANTITIES-SUPERSTRUCTURE".

IOWA DEPARTMENT OF TRANSPORTATION - HIGHWAY DIVISION

DESIGN SHEET NO. ____ OF ____ FILE NO. _____ DESIGN NO. _____

REVISED 02-05 - PAVING NOTCH BENT BARS AND BAR LIST CHANGED.
HM4429.SOI: THIS SHEET ISSUED 9-1-95.

DESIGN TEAM	CONCRETE SLAB, SUPERSTRUCTURE DETAILS-13 200 mm ROADWAY-24 000 mm BRIDGE	STANDARD SHEET M4429	COUNTY	PROJECT NUMBER	SHEET NUMBER

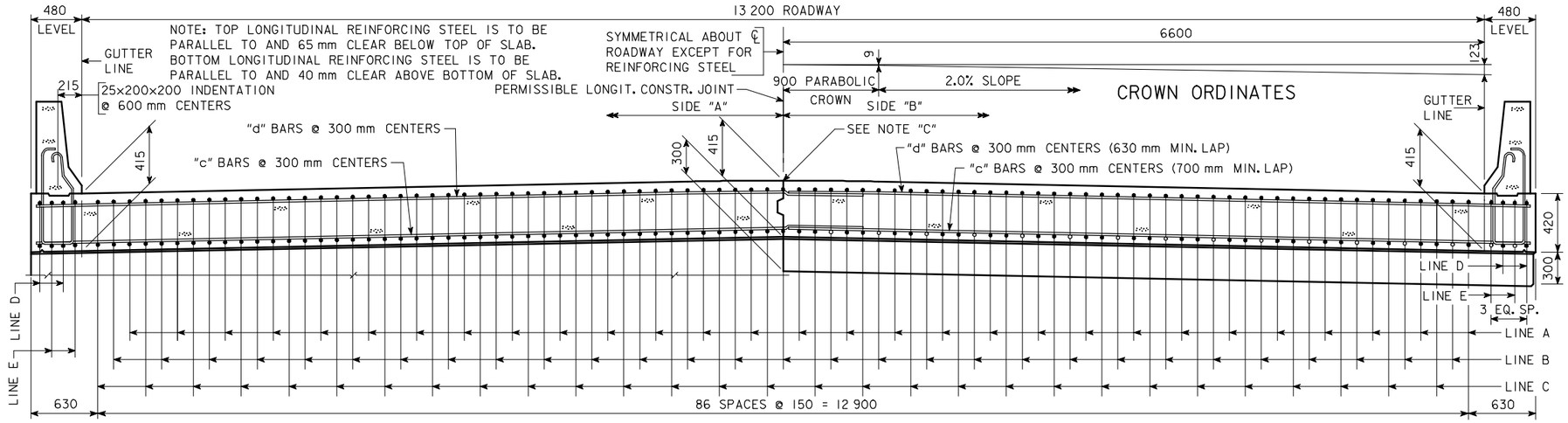

HALF SECTION NEAR ABUTMENT

NOTE "C": IF PERMISSIBLE LONGITUDINAL JOINT IS USED, BARS ON ℄ ROADWAY MAY BE SHIFTED TO CLEAR JOINT BY 25 mm.

SLAB CROSS-SECTIONAL AREA-SIDE "A" =	2.966	m^2
SLAB CROSS-SECTIONAL AREA-SIDE "B" =	2.966	m^2
BARRIER RAIL CROSS-SECTIONAL AREA-ONE RAIL =	0.263	m^2

HALF SECTION NEAR PIER

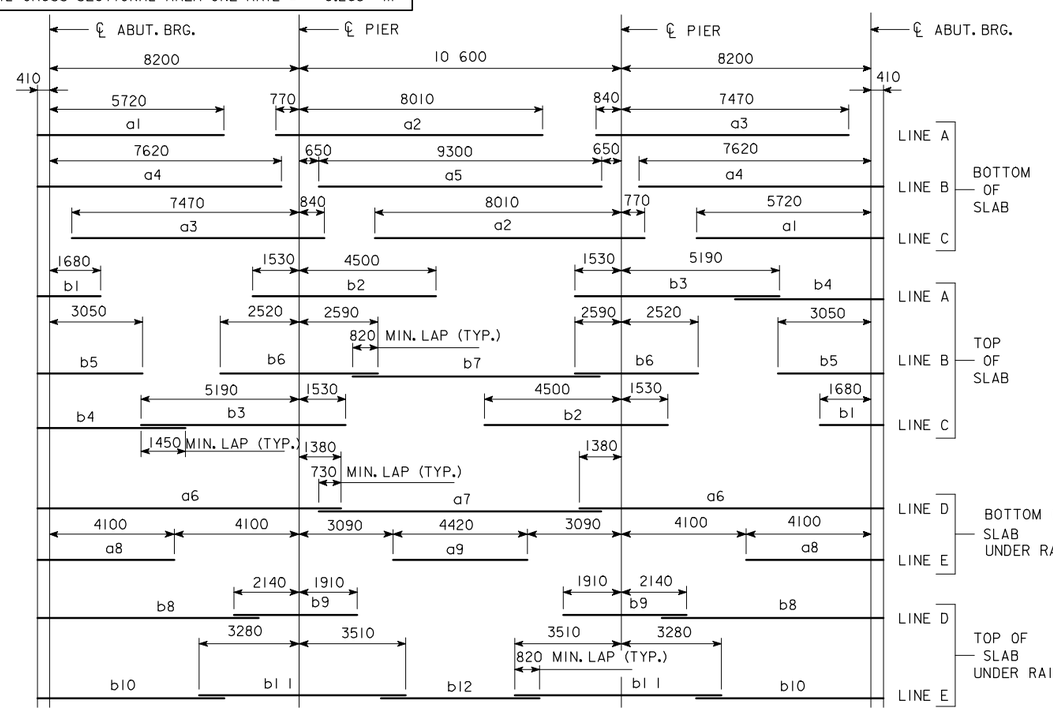

PLACEMENT FOR LONGITUDINAL REINFORCEMENT

* WING REINFORCING MAY BE UNCOATED

EPOXY COATED REINFORCING BAR LIST SUPERSTRUCTURE

MARK	SIZE	LOCATION	SHAPE	No.	LENGTH	MASS
a1	25	BOTT. OF SLAB, LONGIT.	——	58	6130	1395
a2	25	BOTT. OF SLAB, LONGIT.	——	58	8780	1999
a3	25	BOTT. OF SLAB, LONGIT.	——	58	8310	1892
a4	30	BOTT. OF SLAB, LONGIT.	——	58	8030	2559
a5	30	BOTT. OF SLAB, LONGIT.	——	29	9300	1482
a6	25	BOTT. OF SLAB, LONGIT., AT RAIL	——	8	9990	314
a7	25	BOTT. OF SLAB, LONGIT., AT RAIL	——	4	9300	146
a8	25	BOTT. OF SLAB, LONGIT., AT RAIL	——	8	4510	142
a9	25	BOTT. OF SLAB, LONGIT., AT RAIL	——	4	4420	69
b1	20	TOP OF SLAB, LONGIT.	——	58	2090	285
b2	30	TOP OF SLAB, LONGIT.	——	58	6030	1922
b3	30	TOP OF SLAB, LONGIT.	——	58	6720	2142
b4	25	TOP OF SLAB, LONGIT.	——	58	4870	1109
b5	20	TOP OF SLAB, LONGIT.	——	58	3460	473
b6	30	TOP OF SLAB, LONGIT.	——	58	5110	1629
b7	20	TOP OF SLAB, LONGIT.	——	29	7060	482
b8	20	TOP OF SLAB, LONGIT., AT RAIL	——	8	7290	137
b9	30	TOP OF SLAB, LONGIT., AT RAIL	——	8	4050	178
b10	20	TOP OF SLAB, LONGIT., AT RAIL	——	8	6150	116
b11	25	TOP OF SLAB, LONGIT., AT RAIL	——	8	6790	213
b12	20	TOP OF SLAB, LONGIT., AT RAIL	——	4	5220	49
c1	20	BOTT. OF SLAB, TRANSV., SIDE "A"	——			
c2	20	BOTT. OF SLAB, TRANSV., SIDE "B"	——			
d1	15	TOP OF SLAB, TRANSV., SIDE "A"	——			
d2	15	TOP OF SLAB, TRANSV., SIDE "B"	——			
e1	25	SLAB, TRANSV., AT ABUT., SIDE "A"		20		
e2	25	SLAB, TRANSV., AT ABUT., SIDE "B"		20		
e3	20	SLAB, HAIRPINS, AT ABUT.	⊓	100		
h1	15	PIER CAP HOOPS	⊔		2220	
h2	25	PIER CAP ENDS	⊂	4	4200	66
h3	25	PIER CAP, BOTT., LONGIT., SIDE "A"	——	8		
h4	25	PIER CAP, BOTT., LONGIT., SIDE "B"	——	8		
h5	25	PIER CAP, TOP, LONGIT., SIDE "A"	——	4		
h6	25	PIER CAP, TOP, LONGIT., SIDE "B"	——	4		
j1	15	TOP OF SLAB, TRANSV., AT RAIL	——		1450	
*m1-4	15	WING, VERTICAL	——	32	SHOWN	53
*n1	15	WING, HORIZONTAL	——	24	2040	77
p1	15	PAVING SUPPORT, TRANSV.	⊏		2700	
p3	15	PAVING SUPPORT, LONGIT., SIDE "A"	——	6		
p4	15	PAVING SUPPORT, LONGIT., SIDE "B"	——	6		
BARRIER RAIL - SEE DESIGN SHEET ???						
REINFORCING STEEL EPOXY COATED - TOTAL - (kg)						

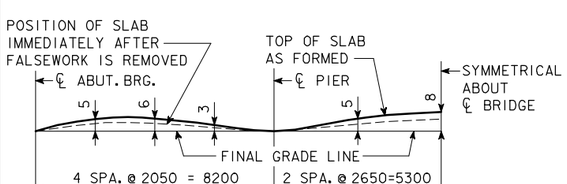

FORM CAMBER DIAGRAM

THIS DIAGRAM SHOWS THE FORM CAMBER REQUIRED TO COMPENSATE FOR THE ANTICIPATED ULTIMATE DEAD LOAD DEFLECTION. THE ABOVE DIMENSIONS DO NOT INCLUDE ANY ALLOWANCE FOR FORM DEFLECTION OR FALSEWORK SETTLEMENT.

BENT BAR DETAILS

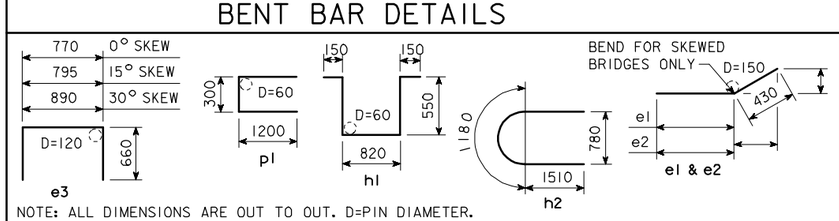

NOTE: ALL DIMENSIONS ARE OUT TO OUT. D=PIN DIAMETER.

ESTIMATED QUANT.-SUPERSTR.

ITEM		UNITS	QUANTITY
STRUCTURAL CONCRETE (BRIDGE)		m^3	
REINFORCING STEEL, EPOXY COATED		kg	
	FURNISH	m	
	DRIVE	m	

STRUCTURAL CONCRETE QUANTITY INCLUDES SLAB WITH INTEGRAL PIER CAPS AND WINGS. FOR TABULATION, SEE "CONCRETE PLACEMENT QUANTITIES-SUPERSTRUCTURE".

IOWA DEPARTMENT OF TRANSPORTATION - HIGHWAY DIVISION

DESIGN SHEET NO. ____ OF ____ FILE NO. _____ DESIGN NO. _____

REVISED 02-05 - PAVING NOTCH BENT BARS AND BAR LIST CHANGED.
HM4430.SOI: THIS SHEET ISSUED 9-1-95.

DESIGN TEAM	CONCRETE SLAB, SUPERSTRUCTURE DETAILS-13 200 mm ROADWAY-27 000 mm BRIDGE	STANDARD SHEET M4430	COUNTY	PROJECT NUMBER	SHEET NUMBER

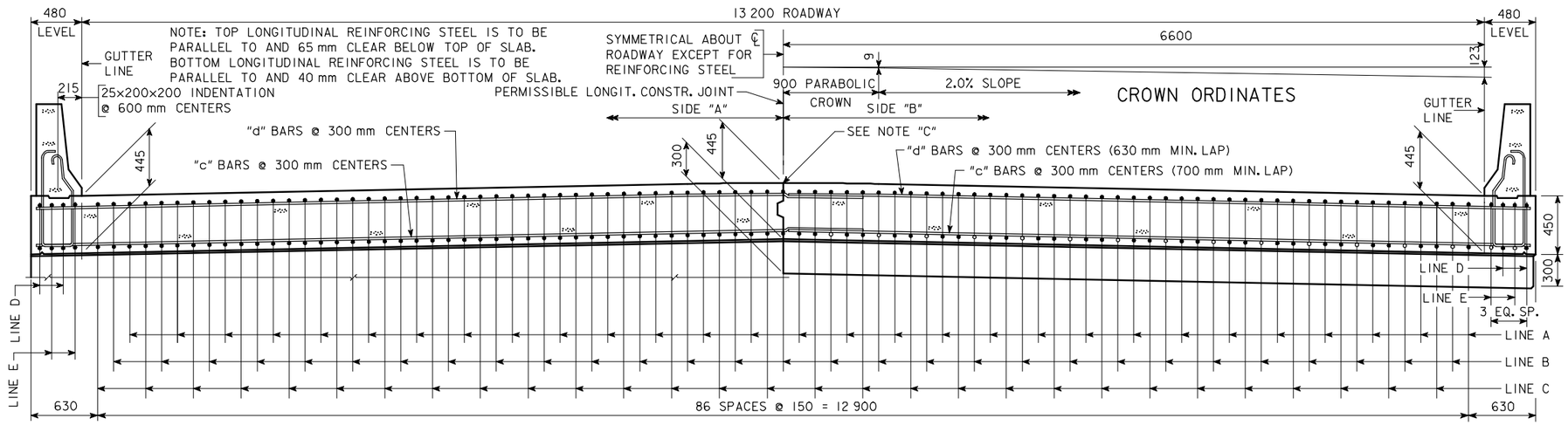

HALF SECTION NEAR ABUTMENT

NOTE "C": IF PERMISSIBLE LONGITUDINAL JOINT IS USED, BARS ON ℄ ROADWAY MAY BE SHIFTED TO CLEAR JOINT BY 25 mm.

SLAB CROSS-SECTIONAL AREA-SIDE "A" =	3.179	m^2
SLAB CROSS-SECTIONAL AREA-SIDE "B" =	3.179	m^2
BARRIER RAIL CROSS-SECTIONAL AREA-ONE RAIL =	0.263	m^2

HALF SECTION NEAR PIER

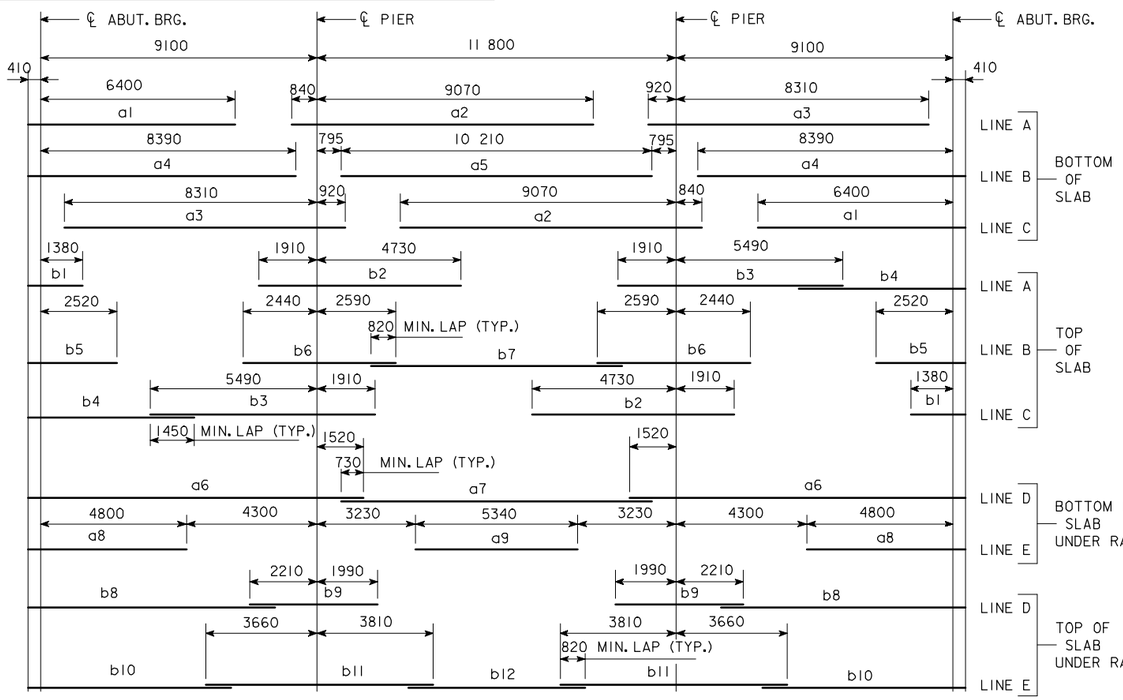

PLACEMENT FOR LONGITUDINAL REINFORCEMENT

* WING REINFORCING MAY BE UNCOATED

EPOXY COATED REINFORCING BAR LIST SUPERSTRUCTURE

MARK	SIZE	LOCATION	SHAPE	No.	LENGTH	MASS
a1	25	BOTT. OF SLAB, LONGIT.	—	58	6810	1550
a2	30	BOTT. OF SLAB, LONGIT.	—	58	9910	3158
a3	25	BOTT. OF SLAB, LONGIT.	—	58	9230	2101
a4	30	BOTT. OF SLAB, LONGIT.	—	58	8800	2805
a5	25	BOTT. OF SLAB, LONGIT.	—	29	10 210	1162
a6	25	BOTT. OF SLAB, LONGIT., AT RAIL	—	8	11 030	346
a7	25	BOTT. OF SLAB, LONGIT., AT RAIL	—	4	10 220	160
a8	25	BOTT. OF SLAB, LONGIT., AT RAIL	—	8	5210	164
a9	25	BOTT. OF SLAB, LONGIT., AT RAIL	—	4	5340	84
b1	20	TOP OF SLAB, LONGIT.	—	58	1790	244
b2	35	TOP OF SLAB, LONGIT.	—	58	6640	3023
b3	35	TOP OF SLAB, LONGIT.	—	58	7400	3369
b4	25	TOP OF SLAB, LONGIT.	—	58	5470	1245
b5	20	TOP OF SLAB, LONGIT.	—	58	2930	400
b6	30	TOP OF SLAB, LONGIT.	—	58	5030	1603
b7	20	TOP OF SLAB, LONGIT.	—	29	8260	564
b8	20	TOP OF SLAB, LONGIT., AT RAIL	—	8	8120	153
b9	30	TOP OF SLAB, LONGIT., AT RAIL	—	8	4200	185
b10	20	TOP OF SLAB, LONGIT., AT RAIL	—	8	6670	126
b11	30	TOP OF SLAB, LONGIT., AT RAIL	—	8	7470	328
b12	20	TOP OF SLAB, LONGIT., AT RAIL	—	4	5820	55
c1	20	BOTT. OF SLAB, TRANSV., SIDE "A"	—			
c2	20	BOTT. OF SLAB, TRANSV., SIDE "B"	—			
d1	15	TOP OF SLAB, TRANSV., SIDE "A"	—			
d2	15	TOP OF SLAB, TRANSV., SIDE "B"	—			
e1	25	SLAB, TRANSV., AT ABUT., SIDE "A"		20		
e2	25	SLAB, TRANSV., AT ABUT., SIDE "B"		20		
e3	20	SLAB, HAIRPINS, AT ABUT.	⊓	100		
h1	15	PIER CAP HOOPS	⊔		2280	
h2	25	PIER CAP ENDS	⊂	4	4200	66
h3	25	PIER CAP, BOTT., LONGIT.,SIDE "A"	—	8		
h4	25	PIER CAP, BOTT., LONGIT.,SIDE "B"	—	8		
h5	25	PIER CAP, TOP, LONGIT.,SIDE "A"	—	4		
h6	25	PIER CAP, TOP, LONGIT.,SIDE "B"	—	4		
j1	15	TOP OF SLAB, TRANSV., AT RAIL	—		1380	
* m1-4	15	WING, VERTICAL	—	32	SHOWN	53
* n1	15	WING, HORIZONTAL	—	24	2040	77
p1	15	PAVING SUPPORT, TRANSV.	⊏		2700	
p3	15	PAVING SUPPORT, LONGIT., SIDE "A"	—	6		
p4	15	PAVING SUPPORT, LONGIT., SIDE "B"	—	6		
BARRIER RAIL - SEE DESIGN SHEET ???						
REINFORCING STEEL EPOXY COATED - TOTAL - (kg)						

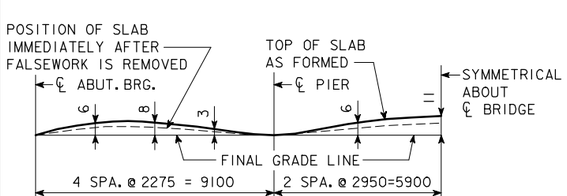

FORM CAMBER DIAGRAM

THIS DIAGRAM SHOWS THE FORM CAMBER REQUIRED TO COMPENSATE FOR THE ANTICIPATED ULTIMATE DEAD LOAD DEFLECTION. THE ABOVE DIMENSIONS DO NOT INCLUDE ANY ALLOWANCE FOR FORM DEFLECTION OR FALSEWORK SETTLEMENT.

BENT BAR DETAILS

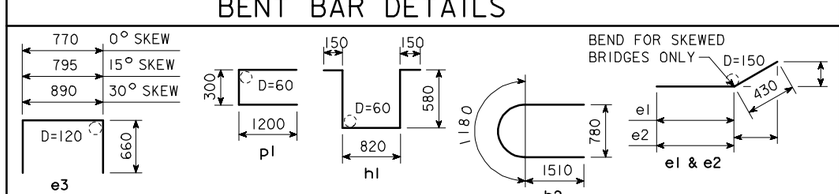

NOTE: ALL DIMENSIONS ARE OUT TO OUT. D=PIN DIAMETER.

ESTIMATED QUANT.-SUPERSTR.

ITEM		UNITS	QUANTITY
STRUCTURAL CONCRETE (BRIDGE)		m^3	
REINFORCING STEEL, EPOXY COATED		kg	
	FURNISH	m	
	DRIVE	m	

STRUCTURAL CONCRETE QUANTITY INCLUDES SLAB WITH INTEGRAL PIER CAPS AND WINGS. FOR TABULATION, SEE "CONCRETE PLACEMENT QUANTITIES-SUPERSTRUCTURE".

IOWA DEPARTMENT OF TRANSPORTATION - HIGHWAY DIVISION

DESIGN SHEET NO. ____ OF ____ FILE NO. _____ DESIGN NO. _____

REVISED 02-05 - PAVING NOTCH BENT BARS AND BAR LIST CHANGED.
HM431.SOI: THIS SHEET ISSUED 9-1-95.

DESIGN TEAM	CONCRETE SLAB, SUPERSTRUCTURE DETAILS-13 200 mm ROADWAY-30 000 mm BRIDGE	STANDARD SHEET M431	COUNTY	PROJECT NUMBER	SHEET NUMBER

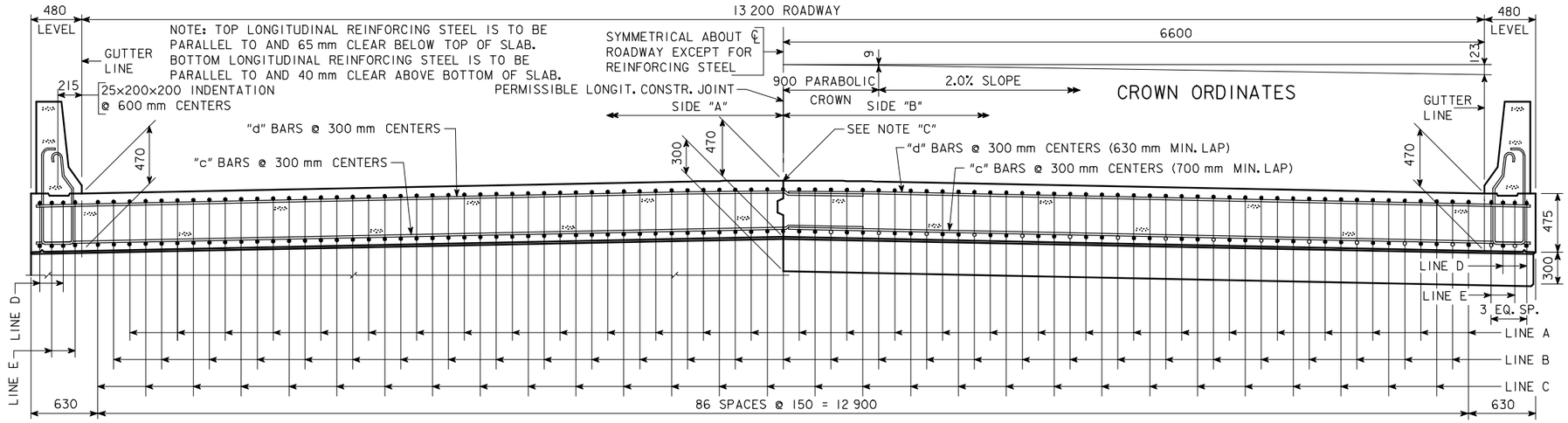

HALF SECTION NEAR ABUTMENT

NOTE "C": IF PERMISSIBLE LONGITUDINAL JOINT IS USED, BARS ON ℄ ROADWAY MAY BE SHIFTED TO CLEAR JOINT BY 25 mm.

SLAB CROSS-SECTIONAL AREA-SIDE "A" =	3.356	m^2
SLAB CROSS-SECTIONAL AREA-SIDE "B" =	3.356	m^2
BARRIER RAIL CROSS-SECTIONAL AREA-ONE RAIL =	0.263	m^2

HALF SECTION NEAR PIER

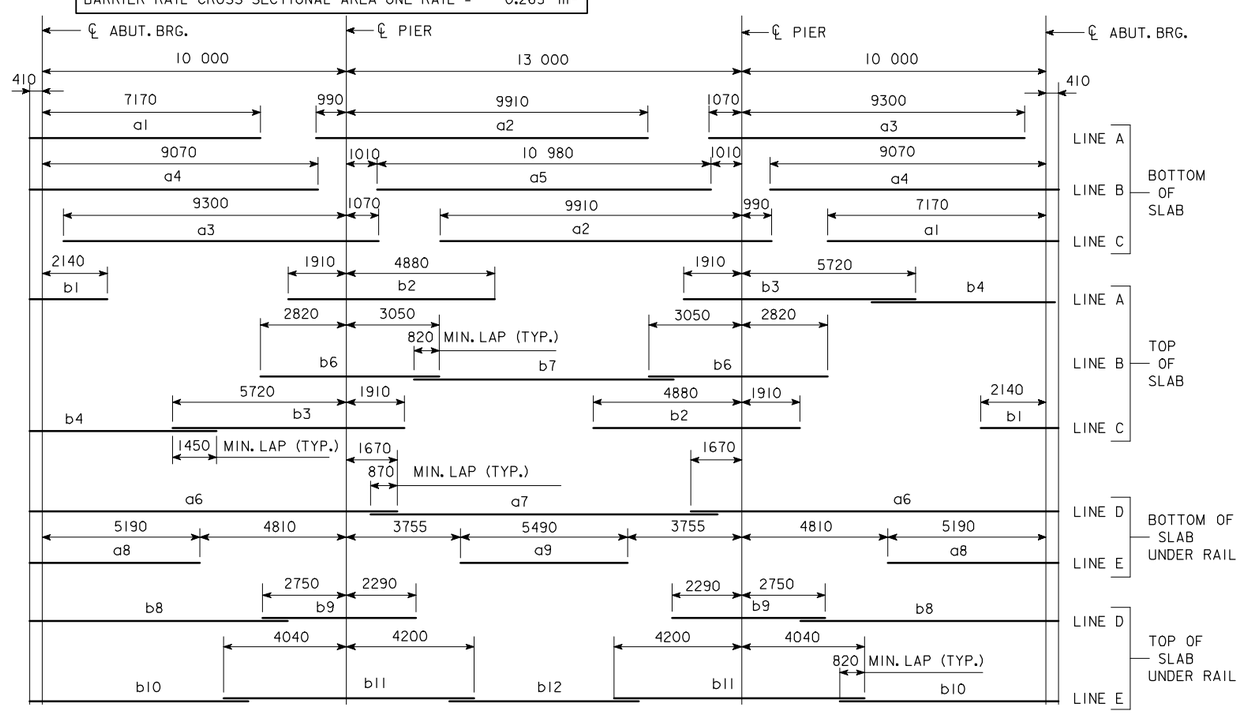

PLACEMENT FOR LONGITUDINAL REINFORCEMENT

* WING REINFORCING MAY BE UNCOATED

EPOXY COATED REINFORCING BAR LIST SUPERSTRUCTURE

MARK	SIZE	LOCATION	SHAPE	No.	LENGTH	MASS
a1	30	BOTT. OF SLAB, LONGIT.	——	58	7580	2416
a2	30	BOTT. OF SLAB, LONGIT.	——	58	10 900	3474
a3	30	BOTT. OF SLAB, LONGIT.	——	58	10 370	3305
a4	25	BOTT. OF SLAB, LONGIT.	——	58	9480	2158
a5	30	BOTT. OF SLAB, LONGIT.	——	29	10 980	1750
a6	30	BOTT. OF SLAB, LONGIT., AT RAIL	——	8	12 080	531
a7	30	BOTT. OF SLAB, LONGIT., AT RAIL	——	4	11 400	251
a8	25	BOTT. OF SLAB, LONGIT., AT RAIL	——	8	5600	176
a9	25	BOTT. OF SLAB, LONGIT., AT RAIL	——	4	5490	86
b1	25	TOP OF SLAB, LONGIT.	——	58	2550	581
b2	35	TOP OF SLAB, LONGIT.	——	58	6790	3091
b3	35	TOP OF SLAB, LONGIT.	——	58	7630	3474
b4	25	TOP OF SLAB, LONGIT.	——	58	6140	1398
b6	35	TOP OF SLAB, LONGIT.	——	58	5870	2673
b7	20	TOP OF SLAB, LONGIT.	——	29	8540	583
b8	20	TOP OF SLAB, LONGIT., AT RAIL	——	8	8480	160
b9	35	TOP OF SLAB, LONGIT., AT RAIL	——	8	5040	317
b10	20	TOP OF SLAB, LONGIT., AT RAIL	——	8	7190	135
b11	30	TOP OF SLAB, LONGIT., AT RAIL	——	8	8240	362
b12	20	TOP OF SLAB, LONGIT., AT RAIL	——	4	6240	59
c1	20	BOTT. OF SLAB, TRANSV., SIDE "A"	——			
c2	20	BOTT. OF SLAB, TRANSV., SIDE "B"	——			
d1	15	TOP OF SLAB, TRANSV., SIDE "A"	——			
d2	15	TOP OF SLAB, TRANSV., SIDE "B"	——			
e1	25	SLAB, TRANSV., AT ABUT., SIDE "A"		20		
e2	25	SLAB, TRANSV., AT ABUT., SIDE "B"		20		
e3	20	SLAB, HAIRPINS, AT ABUT.	⊓	100		
h1	15	PIER CAP HOOPS	⊔		2340	
h2	25	PIER CAP ENDS	⊂⊃	4	4200	66
h3	25	PIER CAP, BOTT., LONGIT.,SIDE "A"	——	8		
h4	25	PIER CAP, BOTT., LONGIT.,SIDE "B"	——	8		
h5	25	PIER CAP, TOP, LONGIT.,SIDE "A"	——	4		
h6	25	PIER CAP, TOP, LONGIT.,SIDE "B"	——	4		
j1	15	TOP OF SLAB, TRANSV., AT RAIL	——		1220	
* m1-4	15	WING, VERTICAL	——	32	SHOWN	53
* n1	15	WING, HORIZONTAL	——	24	2040	77
p1	15	PAVING SUPPORT, TRANSV.	⊏		2700	
p3	15	PAVING SUPPORT, LONGIT., SIDE "A"	——	6		
p4	15	PAVING SUPPORT, LONGIT., SIDE "B"	——	6		
BARRIER RAIL - SEE DESIGN SHEET ???						
REINFORCING STEEL EPOXY COATED - TOTAL - (kg)						

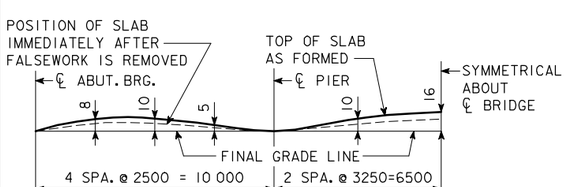

FORM CAMBER DIAGRAM

THIS DIAGRAM SHOWS THE FORM CAMBER REQUIRED TO COMPENSATE FOR THE ANTICIPATED ULTIMATE DEAD LOAD DEFLECTION. THE ABOVE DIMENSIONS DO NOT INCLUDE ANY ALLOWANCE FOR FORM DEFLECTION OR FALSEWORK SETTLEMENT.

BENT BAR DETAILS

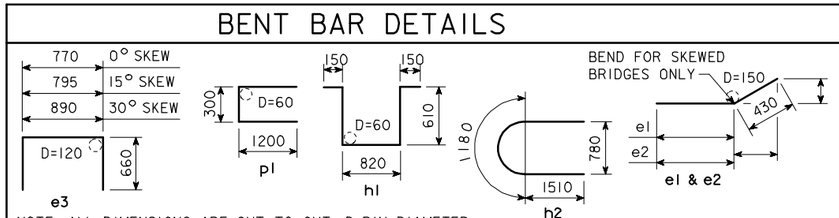

NOTE: ALL DIMENSIONS ARE OUT TO OUT. D=PIN DIAMETER.

ESTIMATED QUANT.-SUPERSTR.

ITEM		UNITS	QUANTITY
STRUCTURAL CONCRETE (BRIDGE)		m^3	
REINFORCING STEEL, EPOXY COATED		kg	
	FURNISH	m	
	DRIVE	m	

STRUCTURAL CONCRETE QUANTITY INCLUDES SLAB WITH INTEGRAL PIER CAPS AND WINGS. FOR TABULATION, SEE "CONCRETE PLACEMENT QUANTITIES-SUPERSTRUCTURE".

IOWA DEPARTMENT OF TRANSPORTATION - HIGHWAY DIVISION

DESIGN SHEET NO. ____ OF ____ FILE NO. _____ DESIGN NO. _____

REVISED 02-05 - PAVING NOTCH BENT BARS AND BAR LIST CHANGED.
HM432-S01: THIS SHEET ISSUED 9-1-95.

DESIGN TEAM	CONCRETE SLAB, SUPERSTRUCTURE DETAILS-13 200 mm ROADWAY-33 000 mm BRIDGE	STANDARD SHEET M4432	COUNTY	PROJECT NUMBER	SHEET NUMBER

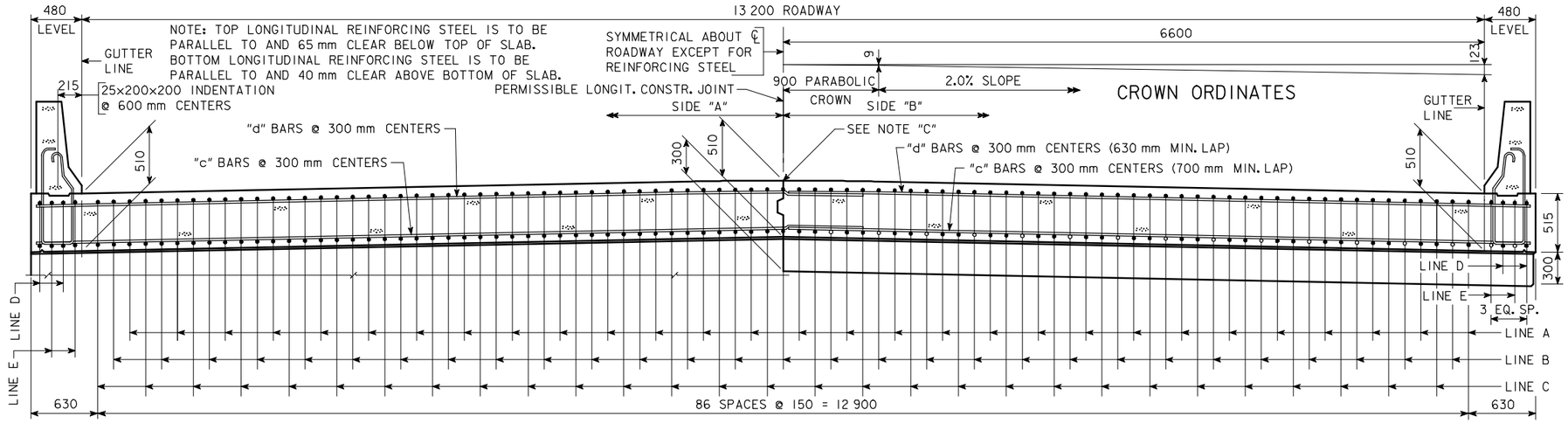

HALF SECTION NEAR ABUTMENT

NOTE "C": IF PERMISSIBLE LONGITUDINAL JOINT IS USED, BARS ON ℄ ROADWAY MAY BE SHIFTED TO CLEAR JOINT BY 25 mm.

SLAB CROSS-SECTIONAL AREA-SIDE "A" =	3.639	m^2
SLAB CROSS-SECTIONAL AREA-SIDE "B" =	3.639	m^2
BARRIER RAIL CROSS-SECTIONAL AREA-ONE RAIL =	0.263	m^2

HALF SECTION NEAR PIER

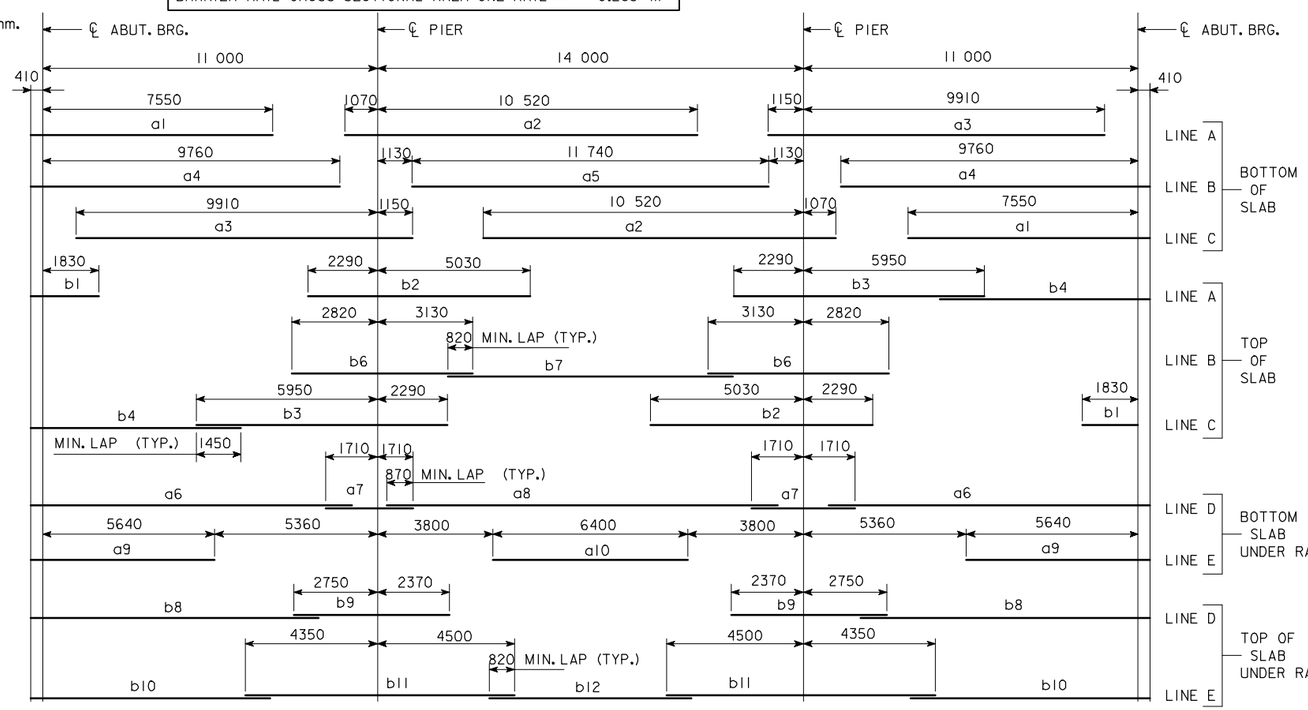

PLACEMENT FOR LONGITUDINAL REINFORCEMENT

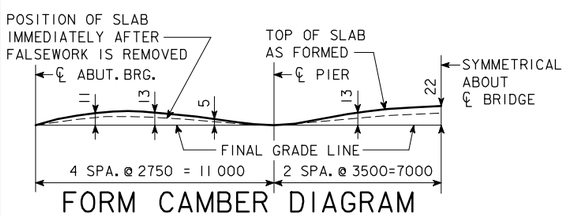

FORM CAMBER DIAGRAM

THIS DIAGRAM SHOWS THE FORM CAMBER REQUIRED TO COMPENSATE FOR THE ANTICIPATED ULTIMATE DEAD LOAD DEFLECTION. THE ABOVE DIMENSIONS DO NOT INCLUDE ANY ALLOWANCE FOR FORM DEFLECTION OR FALSEWORK SETTLEMENT.

BENT BAR DETAILS

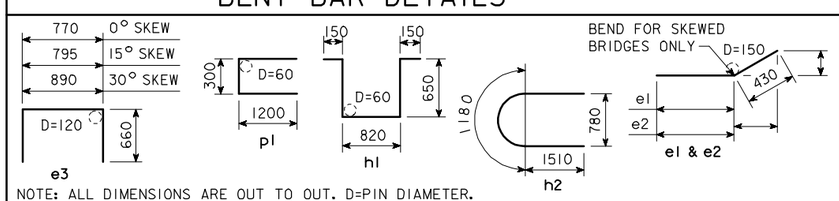

NOTE: ALL DIMENSIONS ARE OUT TO OUT. D=PIN DIAMETER.

ESTIMATED QUANT.-SUPERSTR.

ITEM		UNITS	QUANTITY
STRUCTURAL CONCRETE (BRIDGE)		m^3	
REINFORCING STEEL, EPOXY COATED		kg	
	FURNISH	m	
	DRIVE	m	

STRUCTURAL CONCRETE QUANTITY INCLUDES SLAB WITH INTEGRAL PIER CAPS AND WINGS. FOR TABULATION, SEE "CONCRETE PLACEMENT QUANTITIES-SUPERSTRUCTURE".

EPOXY COATED REINFORCING BAR LIST SUPERSTRUCTURE

MARK	SIZE	LOCATION	SHAPE	No.	LENGTH	MASS
a1	30	BOTT. OF SLAB, LONGIT.	—	58	7960	2537
a2	30	BOTT. OF SLAB, LONGIT.	—	58	11 590	3694
a3	30	BOTT. OF SLAB, LONGIT.	—	58	11 060	3525
a4	30	BOTT. OF SLAB, LONGIT.	—	58	10 170	3241
a5	35	BOTT. OF SLAB, LONGIT.	—	29	11 740	2673
a6	30	BOTT. OF SLAB, LONGIT., AT RAIL	—	8	10 570	465
a7	30	BOTT. OF SLAB, LONGIT., AT RAIL	—	8	3420	150
a8	30	BOTT. OF SLAB, LONGIT., AT RAIL	—	4	12 320	271
a9	25	BOTT. OF SLAB, LONGIT., AT RAIL	—	8	6050	190
a10	25	BOTT. OF SLAB, LONGIT., AT RAIL	—	4	6400	100
b1	20	TOP OF SLAB, LONGIT.	—	58	2240	306
b2	35	TOP OF SLAB, LONGIT.	—	58	7320	3333
b3	35	TOP OF SLAB, LONGIT.	—	58	8240	3752
b4	25	TOP OF SLAB, LONGIT.	—	58	6910	1573
b6	35	TOP OF SLAB, LONGIT.	—	58	5950	2709
b7	20	TOP OF SLAB, LONGIT.	—	29	9380	641
b8	20	TOP OF SLAB, LONGIT., AT RAIL	—	8	9480	179
b9	35	TOP OF SLAB, LONGIT., AT RAIL	—	8	5120	322
b10	20	TOP OF SLAB, LONGIT., AT RAIL	—	8	7880	148
b11	35	TOP OF SLAB, LONGIT., AT RAIL	—	8	8850	556
b12	20	TOP OF SLAB, LONGIT., AT RAIL	—	4	6640	63
c1	20	BOTT. OF SLAB, TRANSV., SIDE "A"	—			
c2	20	BOTT. OF SLAB, TRANSV., SIDE "B"	—			
d1	15	TOP OF SLAB, TRANSV., SIDE "A"	—			
d2	15	TOP OF SLAB, TRANSV., SIDE "B"	—			
e1	25	SLAB, TRANSV., AT ABUT., SIDE "A"		20		
e2	25	SLAB, TRANSV., AT ABUT., SIDE "B"		20		
e3	20	SLAB, HAIRPINS, AT ABUT.	⊓	100		
h1	15	PIER CAP HOOPS	⊔		2420	
h2	25	PIER CAP ENDS	⊂	4	4200	66
h3	25	PIER CAP, BOTT., LONGIT., SIDE "A"	—	8		
h4	25	PIER CAP, BOTT., LONGIT., SIDE "B"	—	8		
h5	25	PIER CAP, TOP, LONGIT., SIDE "A"	—	4		
h6	25	PIER CAP, TOP, LONGIT., SIDE "B"	—	4		
j1	15	TOP OF SLAB, TRANSV., AT RAIL	—		1150	
* m1-4	15	WING, VERTICAL	—	32	SHOWN	53
* n1	15	WING, HORIZONTAL	—	24	2040	77
p1	15	PAVING SUPPORT, TRANSV.	⊏		2700	
p3	15	PAVING SUPPORT, LONGIT., SIDE "A"	—	6		
p4	15	PAVING SUPPORT, LONGIT., SIDE "B"	—	6		
BARRIER RAIL - SEE DESIGN SHEET ???						
REINFORCING STEEL EPOXY COATED - TOTAL - (kg)						

* WING REINFORCING MAY BE UNCOATED

IOWA DEPARTMENT OF TRANSPORTATION - HIGHWAY DIVISION

DESIGN SHEET NO. ____ OF ____ FILE NO. _____ DESIGN NO. _____

REVISED 02-05 - PAVING NOTCH BENT BARS AND BAR LIST CHANGED.
HM4433.SOI: THIS SHEET ISSUED 9-1-95.

DESIGN TEAM	CONCRETE SLAB, SUPERSTRUCTURE DETAILS-13 200 mm ROADWAY-36 000 mm BRIDGE	STANDARD SHEET M4433	COUNTY	PROJECT NUMBER	SHEET NUMBER

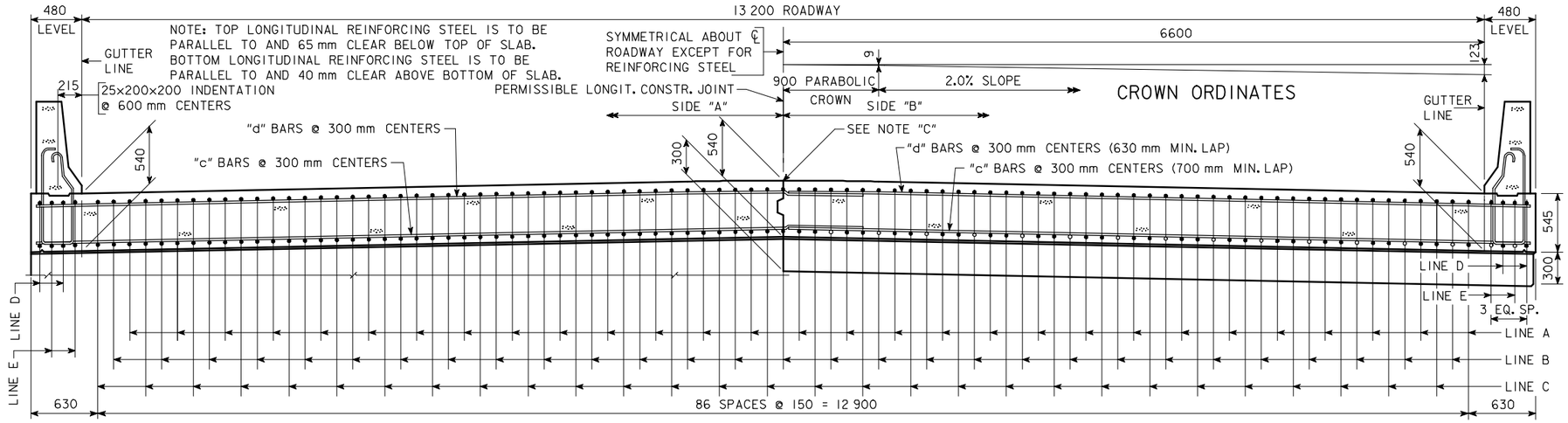

HALF SECTION NEAR ABUTMENT

NOTE "C": IF PERMISSIBLE LONGITUDINAL JOINT IS USED, BARS ON ℄ ROADWAY MAY BE SHIFTED TO CLEAR JOINT BY 25 mm.

SLAB CROSS-SECTIONAL AREA-SIDE "A" =	3.851	m^2
SLAB CROSS-SECTIONAL AREA-SIDE "B" =	3.851	m^2
BARRIER RAIL CROSS-SECTIONAL AREA-ONE RAIL =	0.263	m^2

HALF SECTION NEAR PIER

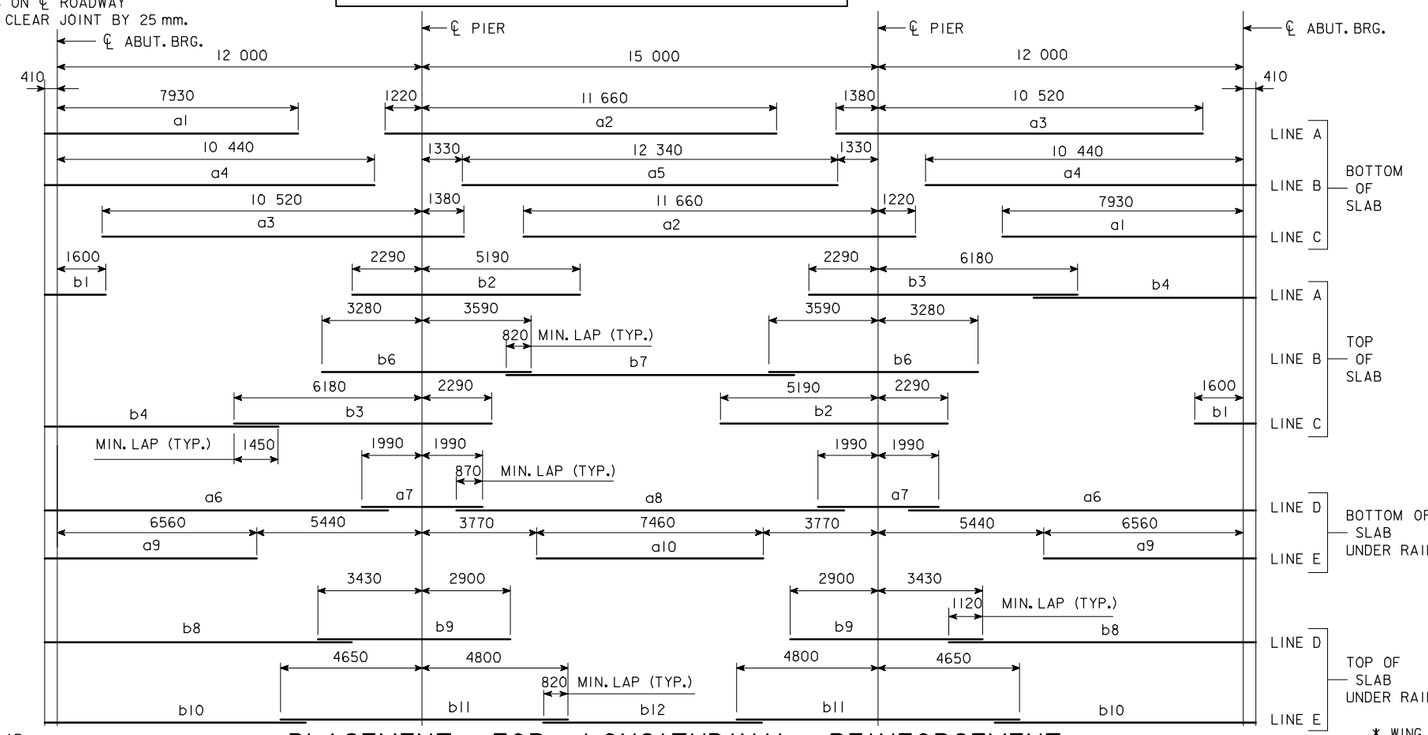

PLACEMENT FOR LONGITUDINAL REINFORCEMENT

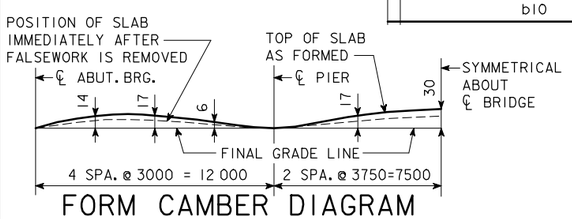

FORM CAMBER DIAGRAM

THIS DIAGRAM SHOWS THE FORM CAMBER REQUIRED TO COMPENSATE FOR THE ANTICIPATED ULTIMATE DEAD LOAD DEFLECTION. THE ABOVE DIMENSIONS DO NOT INCLUDE ANY ALLOWANCE FOR FORM DEFLECTION OR FALSEWORK SETTLEMENT.

BENT BAR DETAILS

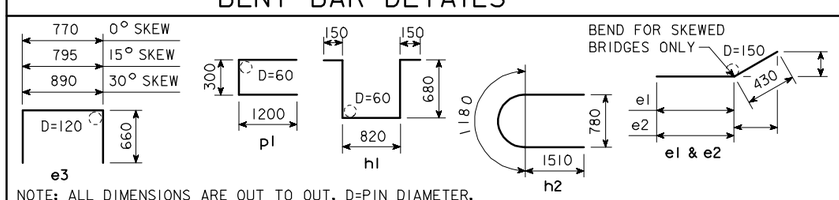

NOTE: ALL DIMENSIONS ARE OUT TO OUT. D=PIN DIAMETER.

ESTIMATED QUANT.-SUPERSTR.

ITEM		UNITS	QUANTITY
STRUCTURAL CONCRETE (BRIDGE)		m^3	
REINFORCING STEEL, EPOXY COATED		kg	
	FURNISH	m	
	DRIVE	m	

STRUCTURAL CONCRETE QUANTITY INCLUDES SLAB WITH INTEGRAL PIER CAPS AND WINGS. FOR TABULATION, SEE "CONCRETE PLACEMENT QUANTITIES-SUPERSTRUCTURE".

EPOXY COATED REINFORCING BAR LIST SUPERSTRUCTURE

MARK	SIZE	LOCATION	SHAPE	No.	LENGTH	MASS
a1	30	BOTT. OF SLAB, LONGIT.	—	58	8340	2658
a2	35	BOTT. OF SLAB, LONGIT.	—	58	12 880	5864
a3	30	BOTT. OF SLAB, LONGIT.	—	58	11 900	3793
a4	35	BOTT. OF SLAB, LONGIT.	—	58	10 850	4940
a5	30	BOTT. OF SLAB, LONGIT.	—	29	12 340	1966
a6	30	BOTT. OF SLAB, LONGIT., AT RAIL	—	8	11 290	496
a7	30	BOTT. OF SLAB, LONGIT., AT RAIL	—	8	3980	175
a8	30	BOTT. OF SLAB, LONGIT., AT RAIL	—	4	12 760	280
a9	30	BOTT. OF SLAB, LONGIT., AT RAIL	—	8	6970	306
a10	30	BOTT. OF SLAB, LONGIT., AT RAIL	—	4	7460	164
b1	20	TOP OF SLAB, LONGIT.	—	58	2010	275
b2	35	TOP OF SLAB, LONGIT.	—	58	7480	3406
b3	35	TOP OF SLAB, LONGIT.	—	58	8470	3856
b4	25	TOP OF SLAB, LONGIT.	—	58	7680	1748
b6	35	TOP OF SLAB, LONGIT.	—	58	6870	3128
b7	20	TOP OF SLAB, LONGIT.	—	29	9460	646
b8	25	TOP OF SLAB, LONGIT., AT RAIL	—	8	10 100	317
b9	35	TOP OF SLAB, LONGIT., AT RAIL	—	8	6330	398
b10	20	TOP OF SLAB, LONGIT., AT RAIL	—	8	8580	162
b11	35	TOP OF SLAB, LONGIT., AT RAIL	—	8	9450	593
b12	20	TOP OF SLAB, LONGIT., AT RAIL	—	4	7040	66
c1	20	BOTT. OF SLAB, TRANSV., SIDE "A"	—			
c2	20	BOTT. OF SLAB, TRANSV., SIDE "B"	—			
d1	15	TOP OF SLAB, TRANSV., SIDE "A"	—			
d2	15	TOP OF SLAB, TRANSV., SIDE "B"	—			
e1	25	SLAB, TRANSV., AT ABUT., SIDE "A"		20		
e2	25	SLAB, TRANSV., AT ABUT., SIDE "B"		20		
e3	20	SLAB, HAIRPINS, AT ABUT.	⊓	100		
h1	15	PIER CAP HOOPS	⊔		2480	
h2	25	PIER CAP ENDS	⊂	4	4200	66
h3	25	PIER CAP, BOTT., LONGIT., SIDE "A"	—	8		
h4	25	PIER CAP, BOTT., LONGIT., SIDE "B"	—	8		
h5	25	PIER CAP, TOP, LONGIT., SIDE "A"	—	4		
h6	25	PIER CAP, TOP, LONGIT., SIDE "B"	—	4		
j1	15	TOP OF SLAB, TRANSV., AT RAIL	—		1070	
* m1-4	15	WING, VERTICAL	—	32	SHOWN	53
* n1	15	WING, HORIZONTAL	—	24	2040	77
p1	15	PAVING SUPPORT, TRANSV.	⊏		2700	
p3	15	PAVING SUPPORT, LONGIT., SIDE "A"	—	6		
p4	15	PAVING SUPPORT, LONGIT., SIDE "B"	—	6		
BARRIER RAIL - SEE DESIGN SHEET ???						
REINFORCING STEEL EPOXY COATED - TOTAL - (kg)						

* WING REINFORCING MAY BE UNCOATED

IOWA DEPARTMENT OF TRANSPORTATION - HIGHWAY DIVISION
DESIGN SHEET NO. ____ OF ____ FILE NO. _____ DESIGN NO. _____

REVISED 02-05 - PAVING NOTCH BENT BARS AND BAR LIST CHANGED.
HM4434.SOI: THIS SHEET ISSUED 9-1-95.

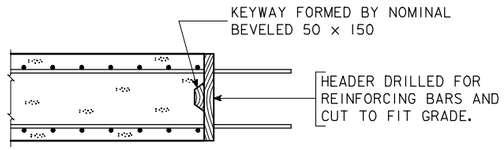

LONGITUDINAL CONSTR. JOINT

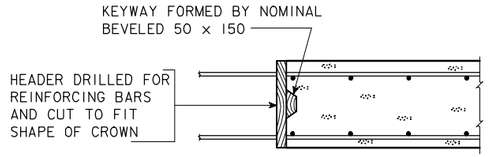

TRANSVERSE CONSTR. JOINT

BRIDGE LENGTH	LENGTH OF DRAIN	MASS kg/DRAIN
21 000	420	12
24 000	440	13
27 000	465	14
30 000	495	15
33 000	520	15
36 000	560	16
39 000	590	17

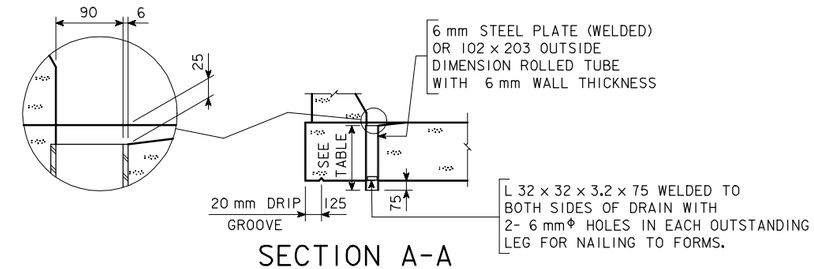

SECTION A-A

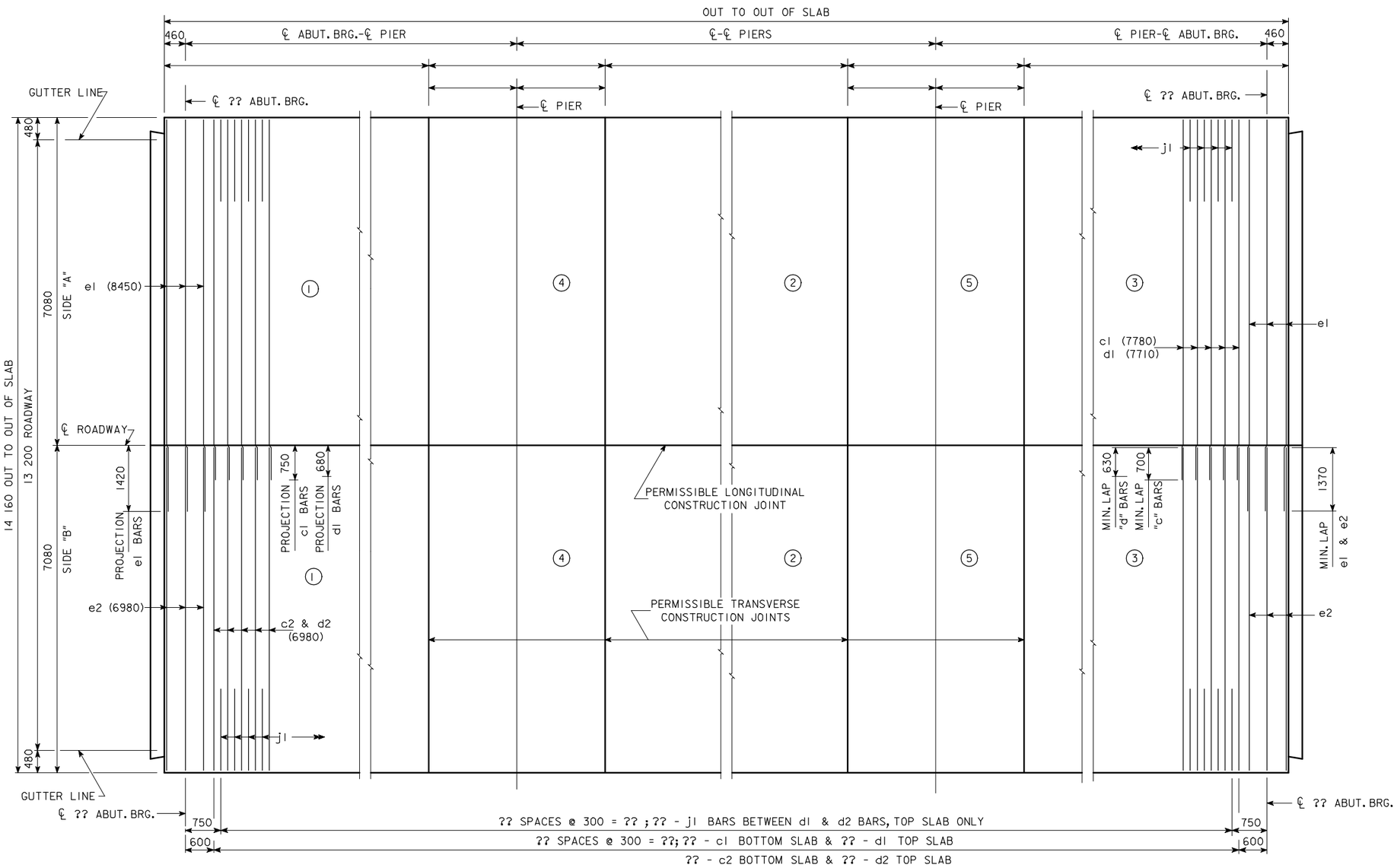

TRANSVERSE REINFORCING STEEL LAYOUT & CONCRETE PLACEMENT DIAGRAM

NOTE: ENCIRCLED NUMBERS DO NOT INDICATE SEQUENCE OF CONCRETE PLACEMENT. (SEE SUPERSTRUCTURE NOTES)

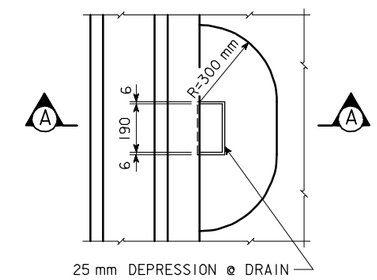

PART PLAN

DRAIN DETAILS

NOTE: DRAINS ARE TO BE GALVANIZED. ?? DRAINS REQUIRED, SEE "SITUATION PLAN" FOR LOCATION. MASS IS BASED ON WELDED PLATE. COST OF DRAINS TO BE INCLUDED IN PRICE BID FOR CONCRETE.

CONCRETE PLACEMENT QUANT.-SUPERSTR.

LOCATION	SIDE "A"	SIDE "B"	TOTAL
SLAB SECTION 1			
SLAB SECTION 2			
SLAB SECTION 3			
SLAB SECTION 4			
SLAB SECTION 5			
WINGS	4 @ 0.50 m^3		2.0
		TOTAL - m^3	

IOWA DEPARTMENT OF TRANSPORTATION - HIGHWAY DIVISION

DESIGN SHEET NO. ____ OF ____ FILE NO. _____ DESIGN NO. _____

REVISED 07-05 - PAVING NOTCH EXTENDED TO INTERCEPT THE WINGS.
HM435.SOI: THIS SHEET ISSUED 9-1-95.

DESIGN TEAM	CONCRETE SLAB, PLACEMENT DIAGRAM - 13 200 mm ROADWAY - 0° SKEW	STANDARD SHEET M4435	COUNTY	PROJECT NUMBER	SHEET NUMBER

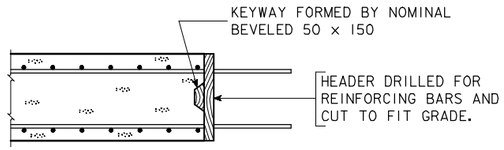

LONGITUDINAL CONSTR. JOINT

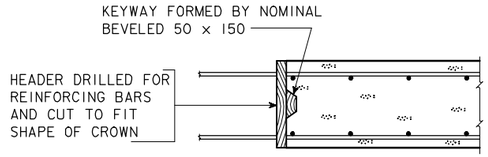

TRANSVERSE CONSTR. JOINT

BRIDGE LENGTH	LENGTH OF DRAIN	MASS kg/DRAIN
21 000	420	12
24 000	440	13
27 000	465	14
30 000	495	15
33 000	520	15
36 000	560	16
39 000	590	17

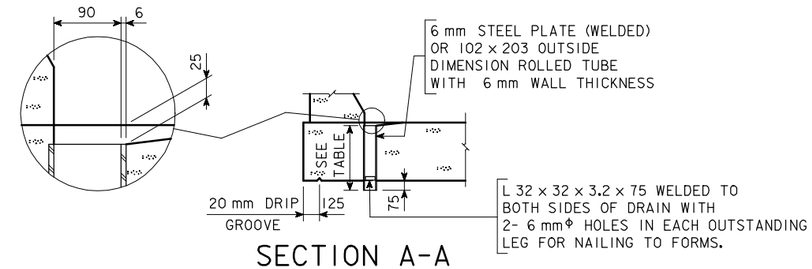

SECTION A-A

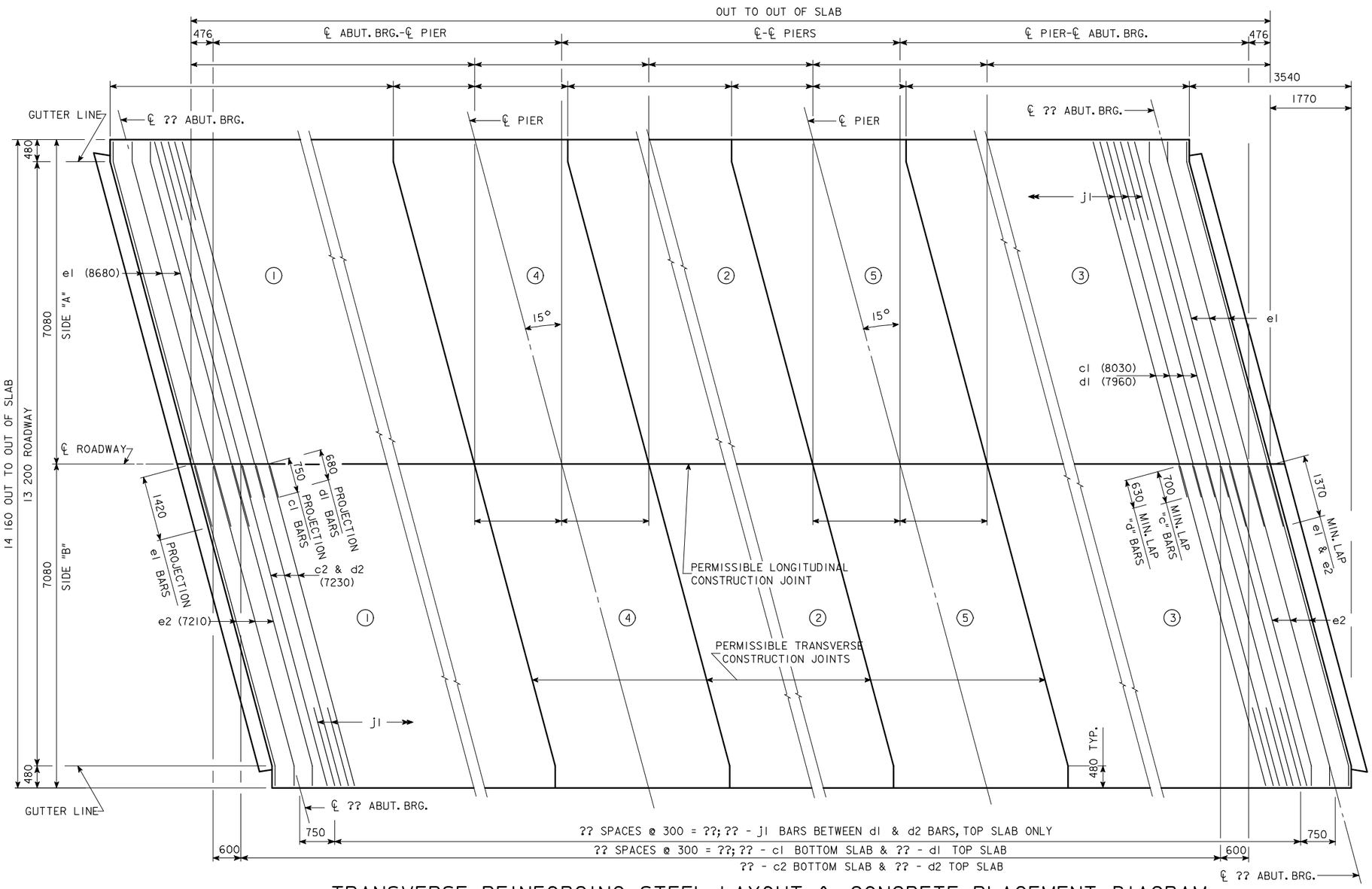

TRANSVERSE REINFORCING STEEL LAYOUT & CONCRETE PLACEMENT DIAGRAM

NOTE: ENCIRCLED NUMBERS DO NOT INDICATE SEQUENCE OF CONCRETE PLACEMENT. (SEE SUPERSTRUCTURE NOTES)

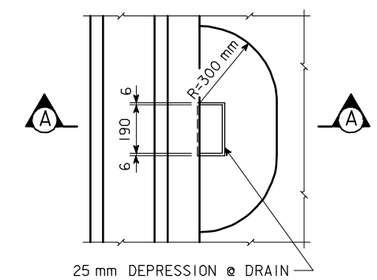

PART PLAN

DRAIN DETAILS

NOTE: DRAINS ARE TO BE GALVANIZED. ?? DRAINS REQUIRED, SEE "SITUATION PLAN" FOR LOCATION. MASS IS BASED ON WELDED PLATE. COST OF DRAINS TO BE INCLUDED IN PRICE BID FOR CONCRETE.

CONCRETE PLACEMENT QUANT.-SUPERSTR.

LOCATION	SIDE "A"	SIDE "B"	TOTAL
SLAB SECTION 1			
SLAB SECTION 2			
SLAB SECTION 3			
SLAB SECTION 4			
SLAB SECTION 5			
WINGS	4 @ 0.50 m^3		2.0
		TOTAL - m^3	

IOWA DEPARTMENT OF TRANSPORTATION - HIGHWAY DIVISION

DESIGN SHEET NO. ____ OF ____ FILE NO. _____ DESIGN NO. _____

REVISED 07-05 - PAVING NOTCH EXTENDED TO INTERCEPT THE WINGS.
HM4436.SOI: THIS SHEET ISSUED 9-1-95.

DESIGN TEAM	CONCRETE SLAB, PLACEMENT DIAGRAM - 13 200 mm ROADWAY - 15° SKEW R.A.	STANDARD SHEET M4436	COUNTY	PROJECT NUMBER	SHEET NUMBER

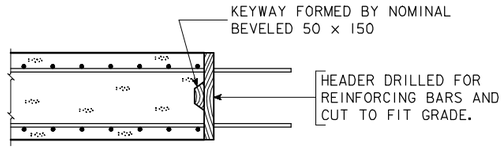

LONGITUDINAL CONSTR. JOINT

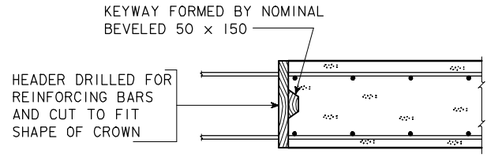

TRANSVERSE CONSTR. JOINT

BRIDGE LENGTH	LENGTH OF DRAIN	MASS kg/DRAIN
21 000	420	12
24 000	440	13
27 000	465	14
30 000	495	15
33 000	520	15
36 000	560	16
39 000	590	17

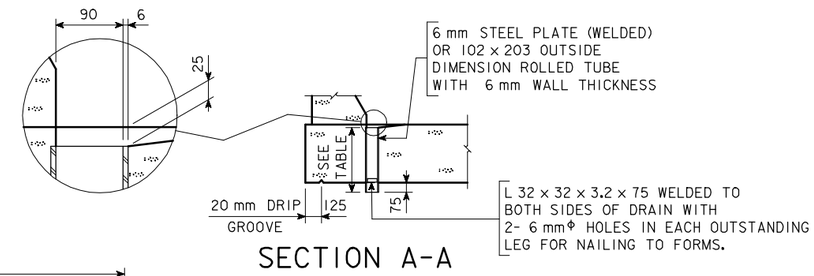

SECTION A-A

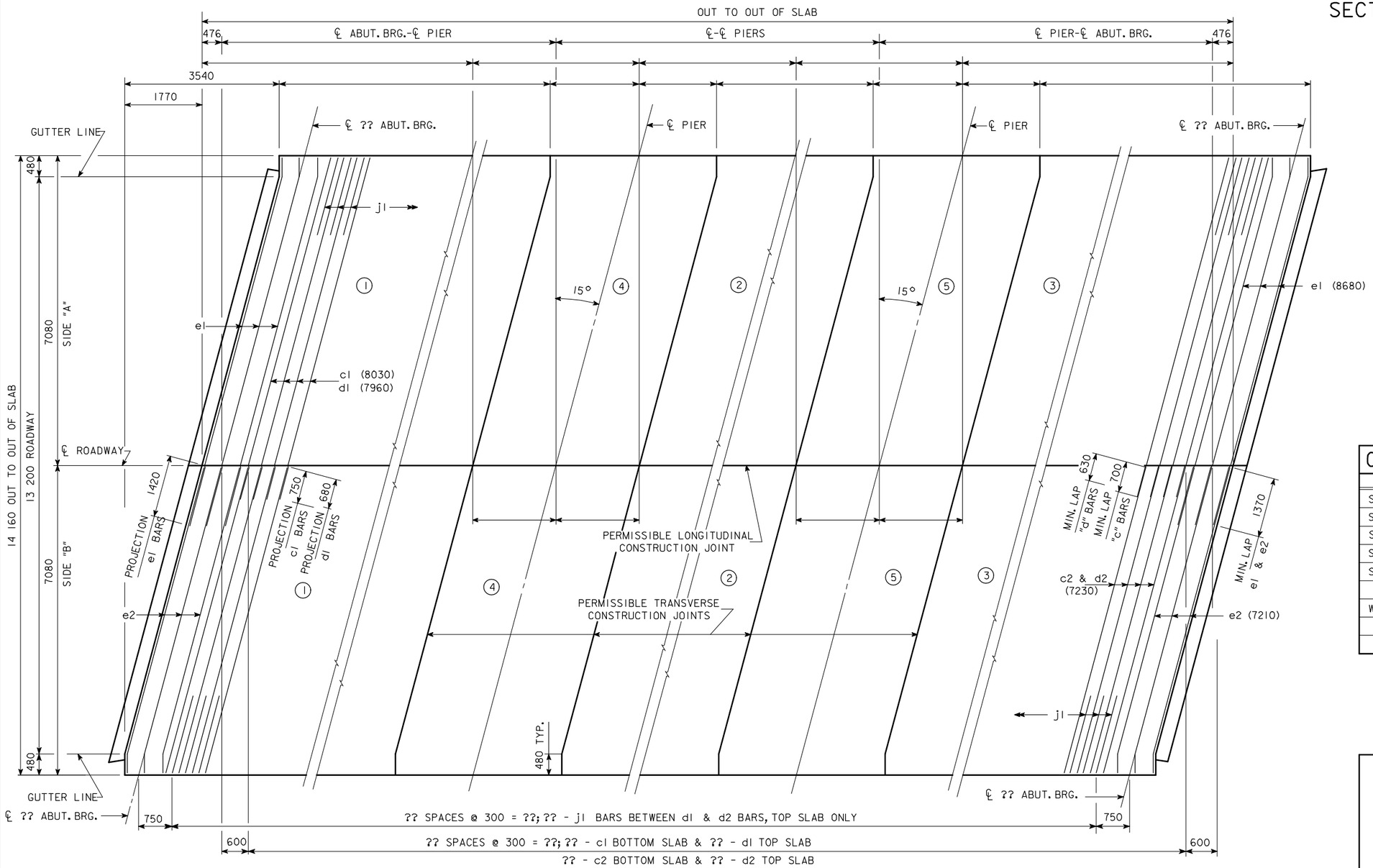

TRANSVERSE REINFORCING STEEL LAYOUT & CONCRETE PLACEMENT DIAGRAM

NOTE: ENCIRCLED NUMBERS DO NOT INDICATE SEQUENCE OF CONCRETE PLACEMENT. (SEE SUPERSTRUCTURE NOTES)

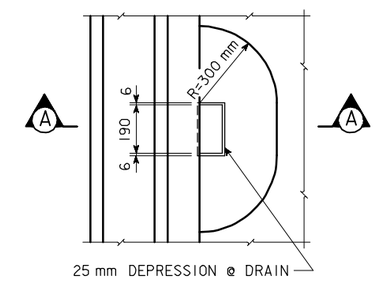

PART PLAN

DRAIN DETAILS

NOTE: DRAINS ARE TO BE GALVANIZED. ?? DRAINS REQUIRED, SEE "SITUATION PLAN" FOR LOCATION. MASS IS BASED ON WELDED PLATE. COST OF DRAINS TO BE INCLUDED IN PRICE BID FOR CONCRETE.

CONCRETE PLACEMENT QUANT.-SUPERSTR.

LOCATION	SIDE "A"	SIDE "B"	TOTAL
SLAB SECTION 1			
SLAB SECTION 2			
SLAB SECTION 3			
SLAB SECTION 4			
SLAB SECTION 5			
WINGS	4 @ 0.50 m^3		2.0
		TOTAL - m^3	

IOWA DEPARTMENT OF TRANSPORTATION - HIGHWAY DIVISION

DESIGN SHEET NO. ____ OF ____ FILE NO. _____ DESIGN NO. _____

REVISED 07-05 - PAVING NOTCH EXTENDED TO INTERCEPT THE WINGS.
HM4437.SOI: THIS SHEET ISSUED 9-1-95.

DESIGN TEAM	CONCRETE SLAB, PLACEMENT DIAGRAM - 13 200 mm ROADWAY - 15° SKEW L.A.	STANDARD SHEET M4437	COUNTY	PROJECT NUMBER	SHEET NUMBER

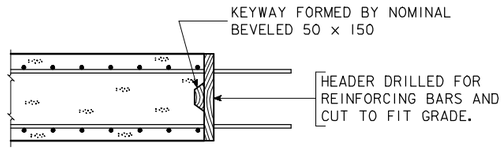

LONGITUDINAL CONSTR. JOINT

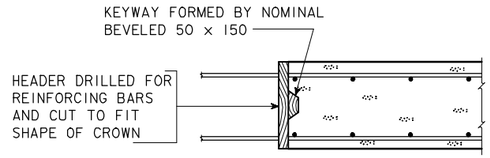

TRANSVERSE CONSTR. JOINT

BRIDGE LENGTH	LENGTH OF DRAIN	MASS kg/DRAIN
21 000	420	12
24 000	440	13
27 000	465	14
30 000	495	15
33 000	520	15
36 000	560	16
39 000	590	17

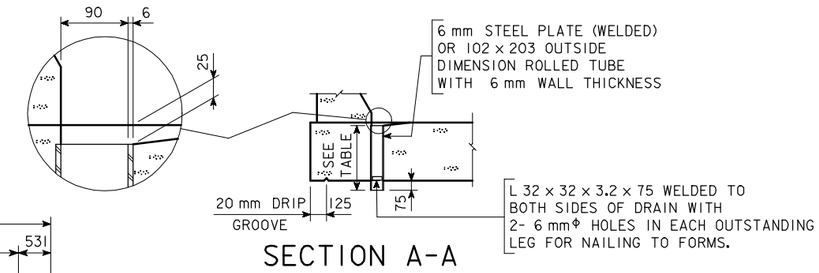

SECTION A-A

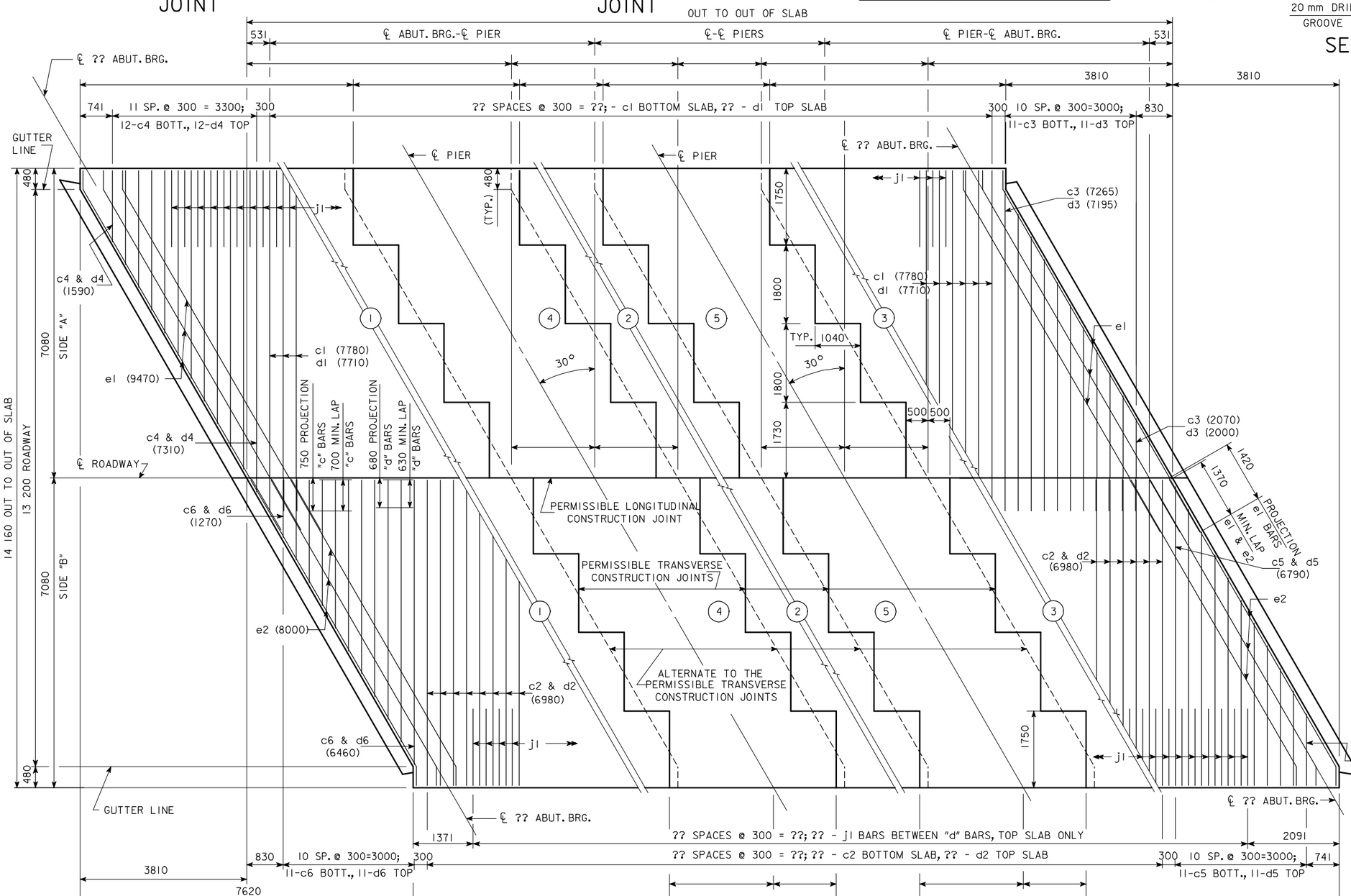

TRANSVERSE REINFORCING STEEL LAYOUT & CONCRETE PLACEMENT DIAGRAM

NOTE: ENCIRCLED NUMBERS DO NOT INDICATE SEQUENCE OF CONCRETE PLACEMENT. (SEE SUPERSTRUCTURE NOTES)

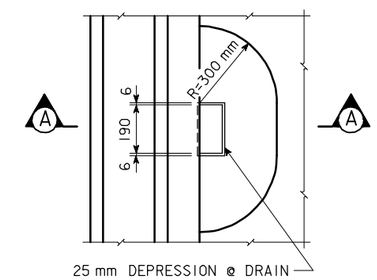

PART PLAN

DRAIN DETAILS

NOTE: DRAINS ARE TO BE GALVANIZED. ?? DRAINS REQUIRED, SEE "SITUATION PLAN" FOR LOCATION. MASS IS BASED ON WELDED PLATE. COST OF DRAINS TO BE INCLUDED IN PRICE BID FOR CONCRETE.

CONCRETE PLACEMENT QUANT.-SUPERSTR.

LOCATION	SIDE "A"	SIDE "B"	TOTAL
SLAB SECTION 1			
SLAB SECTION 2			
SLAB SECTION 3			
SLAB SECTION 4			
SLAB SECTION 5			
WINGS	4 @ 0.50 m^3		2.0
		TOTAL - m^3	

IOWA DEPARTMENT OF TRANSPORTATION - HIGHWAY DIVISION

DESIGN SHEET NO. ____ OF ____ FILE NO. _____ DESIGN NO. _____

REVISED 07-05 - PAVING NOTCH EXTENDED TO INTERCEPT THE WINGS.
HM4438.SOI: THIS SHEET ISSUED 9-1-95.

DESIGN TEAM	CONCRETE SLAB, PLACEMENT DIAGRAM - 13 200 mm ROADWAY - 30° SKEW R. A.	STANDARD SHEET M4438	COUNTY	PROJECT NUMBER	SHEET NUMBER

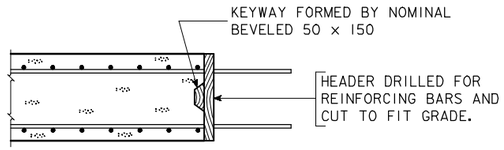

LONGITUDINAL CONSTR. JOINT

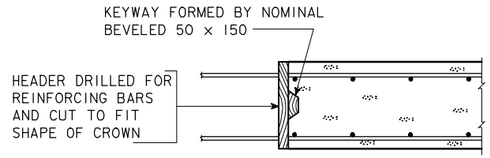

TRANSVERSE CONSTR. JOINT

BRIDGE LENGTH	LENGTH OF DRAIN	MASS kg/DRAIN
21 000	420	12
24 000	440	13
27 000	465	14
30 000	495	15
33 000	520	15
36 000	560	16
39 000	590	17

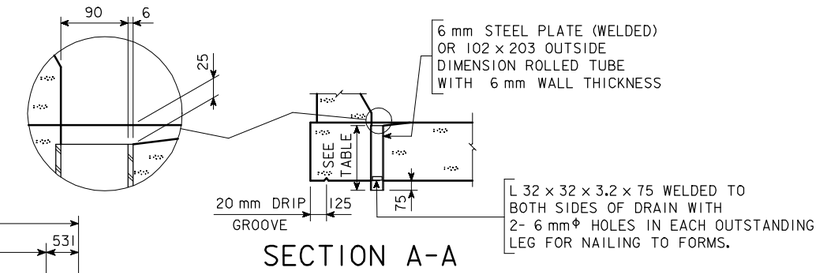

SECTION A-A

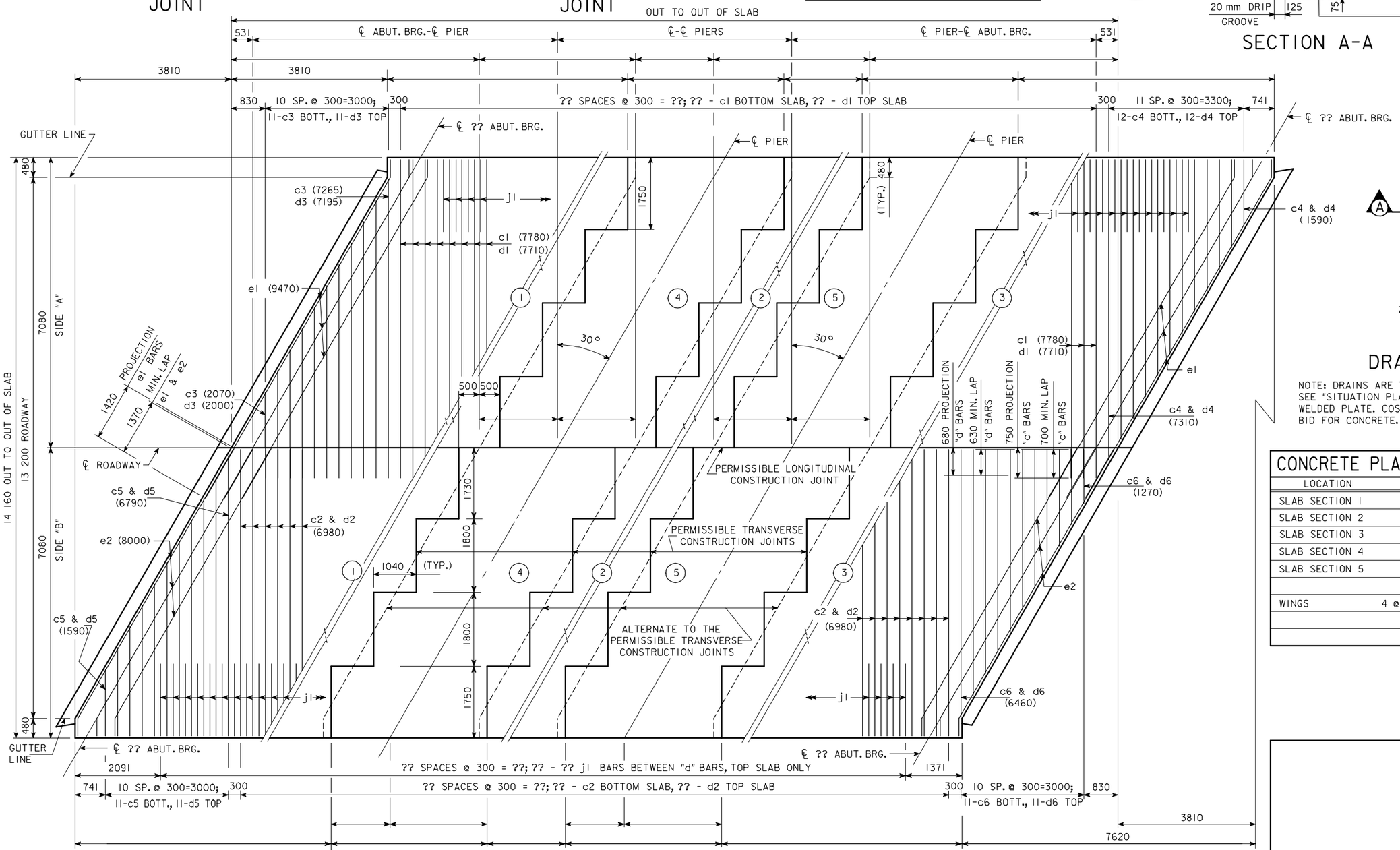

TRANSVERSE REINFORCING STEEL LAYOUT & CONCRETE PLACEMENT DIAGRAM

NOTE: ENCIRCLED NUMBERS DO NOT INDICATE SEQUENCE OF CONCRETE PLACEMENT. (SEE SUPERSTRUCTURE NOTES)

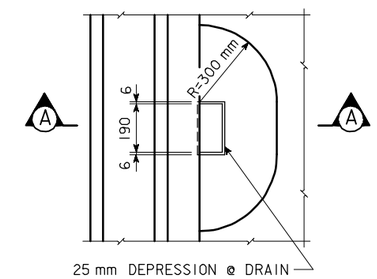

PART PLAN

DRAIN DETAILS

NOTE: DRAINS ARE TO BE GALVANIZED. ?? DRAINS REQUIRED, SEE "SITUATION PLAN" FOR LOCATION. MASS IS BASED ON WELDED PLATE. COST OF DRAINS TO BE INCLUDED IN PRICE BID FOR CONCRETE.

CONCRETE PLACEMENT QUANT.-SUPERSTR.

LOCATION	SIDE "A"	SIDE "B"	TOTAL
SLAB SECTION 1			
SLAB SECTION 2			
SLAB SECTION 3			
SLAB SECTION 4			
SLAB SECTION 5			
WINGS	4 @ 0.50 m^3		2.0
		TOTAL - m^3	

IOWA DEPARTMENT OF TRANSPORTATION - HIGHWAY DIVISION

DESIGN SHEET NO. ____ OF ____ FILE NO. _____ DESIGN NO. _____

REVISED 07-05 - PAVING NOTCH EXTENDED TO INTERCEPT THE WINGS.
HM4439.SOI: THIS SHEET ISSUED 9-1-95.

DESIGN TEAM	CONCRETE SLAB, PLACEMENT DIAGRAM - 13 200 mm ROADWAY - 30° SKEW L. A.	STANDARD SHEET M4439	COUNTY	PROJECT NUMBER	SHEET NUMBER

30° SKEW

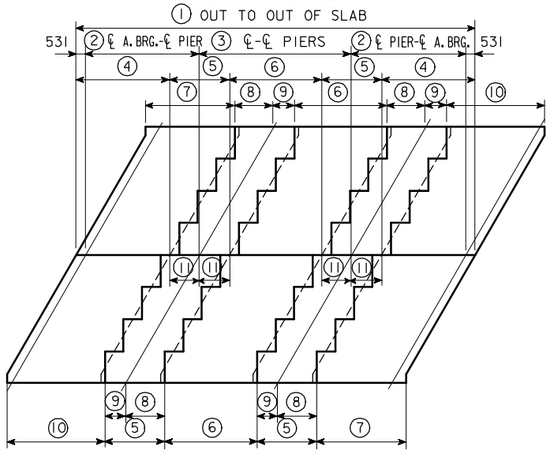

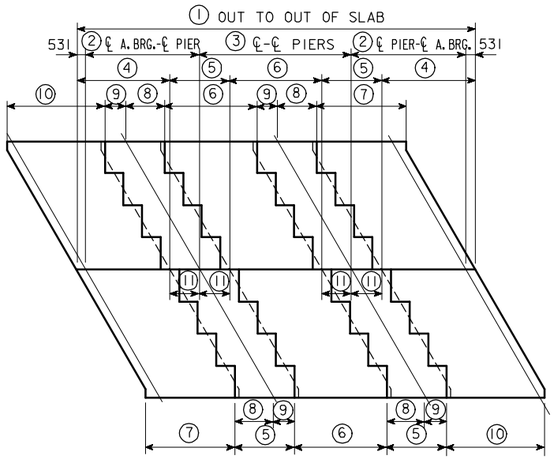

15° SKEW

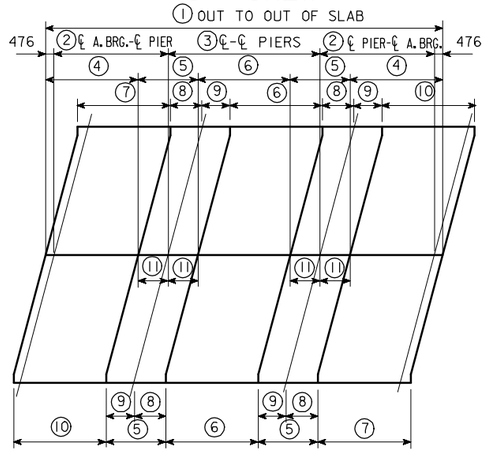

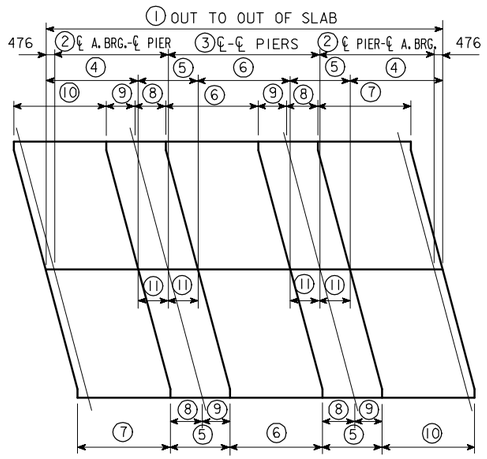

0° SKEW

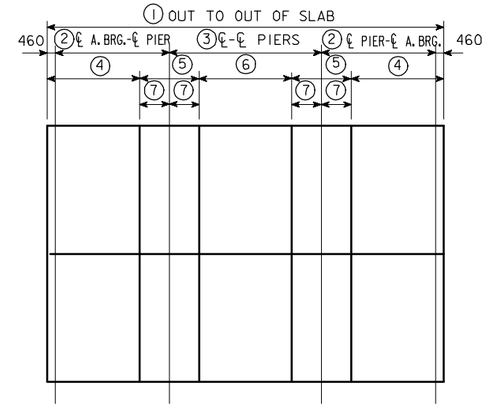

INDEX OF STANDARD SHEETS AVAILABLE

SHEET NO.	SHEET DESCRIPTION
M4441	SUBSTRUCTURE DETAILS - 0° SKEW ABUTMENT & PIER PLANS, SUBSTRUCTURE NOTES
M4442	SUBSTRUCTURE DETAILS - 15° SKEW R. A. ABUTMENT & PIER PLANS, SUBSTRUCTURE NOTES
M4443	SUBSTRUCTURE DETAILS - 15° SKEW L. A. ABUTMENT & PIER PLANS, SUBSTRUCTURE NOTES
M4444	SUBSTRUCTURE DETAILS - 30° SKEW R. A. ABUTMENT & PIER PLANS, SUBSTRUCTURE NOTES
M4445	SUBSTRUCTURE DETAILS - 30° SKEW L. A. ABUTMENT & PIER PLANS, SUBSTRUCTURE NOTES
M4446	LONGITUDINAL SECTION - ALL BRIDGES WING DETAILS, ABUT. REINF. BAR LIST & SUPERSTR. NOTES
M4447	BARRIER RAIL DETAILS - ALL BRIDGES
M4448	SUPERSTRUCTURE DETAILS - 21 000 mm BRIDGE CROSS SECTION, REINF. LAYOUT & BAR LIST
M4449	SUPERSTRUCTURE DETAILS - 24 000 mm BRIDGE CROSS SECTION, REINF. LAYOUT & BAR LIST
M4450	SUPERSTRUCTURE DETAILS - 27 000 mm BRIDGE CROSS SECTION, REINF. LAYOUT & BAR LIST
M4451	SUPERSTRUCTURE DETAILS - 30 000 mm BRIDGE CROSS SECTION, REINF. LAYOUT & BAR LIST
M4452	SUPERSTRUCTURE DETAILS - 33 000 mm BRIDGE CROSS SECTION, REINF. LAYOUT & BAR LIST
M4453	SUPERSTRUCTURE DETAILS - 36 000 mm BRIDGE CROSS SECTION, REINF. LAYOUT & BAR LIST
M4454	SUPERSTRUCTURE DETAILS - 39 000 mm BRIDGE CROSS SECTION, REINF. LAYOUT & BAR LIST
M4455	CONCRETE PLACEMENT DIAGRAM - 0° SKEW TRANSVERSE REINFORCING STEEL LAYOUT
M4456	CONCRETE PLACEMENT DIAGRAM - 15° SKEW R.A. TRANSVERSE REINFORCING STEEL LAYOUT
M4457	CONCRETE PLACEMENT DIAGRAM - 15° SKEW L. A. TRANSVERSE REINFORCING STEEL LAYOUT
M4458	CONCRETE PLACEMENT DIAGRAM - 30° SKEW R. A. TRANSVERSE REINFORCING STEEL LAYOUT
M4459	CONCRETE PLACEMENT DIAGRAM - 30° SKEW L. A. TRANSVERSE REINFORCING STEEL LAYOUT

DIMENSIONS OF SLAB SECTIONS

BR. \ PT.	(1)	(2)	(3)	(4)	(5)	(6)	(7)	(8)	(9)	(10)	(11)
21 000	22 062	6400	8200	5291	3280	4920	5148	2060	1218	5436	1640
24 000	25 062	7300	9400	5951	3760	5640	5808	2300	1458	6096	1880
27 000	28 062	8200	10 600	6611	4240	6360	6468	2540	1698	6756	2120
30 000	31 062	9100	11 800	7271	4720	7080	7128	2280	1938	7416	2360
33 000	34 062	10 000	13 000	7931	5200	7800	7788	3020	2178	8076	2600
36 000	37 062	11 000	14 000	8731	5600	8400	8588	3220	2378	8876	2800
39 000	40 062	12 000	15 000	9531	6000	9000	9388	3420	2578	9676	3000

DIMENSIONS OF SLAB SECTIONS

BR. \ PT.	(1)	(2)	(3)	(4)	(5)	(6)	(7)	(8)	(9)	(10)	(11)
21 000	21 952	6400	8200	5236	3280	4920	5236	1769	1511	5236	1640
24 000	24 952	7300	9400	5896	3760	5640	5896	2009	1751	5896	1880
27 000	27 952	8200	10 600	6556	4240	6360	6556	2249	1991	6556	2120
30 000	30 952	9100	11 800	7216	4720	7080	7216	2489	2231	7216	2360
33 000	33 952	10 000	13 000	7876	5200	7800	7876	2729	2471	7876	2600
36 000	36 952	11 000	14 000	8676	5600	8400	8676	2929	2671	8676	2800
39 000	39 952	12 000	15 000	9476	6000	9000	9476	3129	2871	9476	3000

DIMENSIONS OF SLAB SECTIONS

BR. \ PT.	(1)	(2)	(3)	(4)	(5)	(6)	(7)
21 000	21 920	6400	8200	5220	3280	4920	1640
24 000	24 920	7300	9400	5880	3760	5640	1880
27 000	27 920	8200	10 600	6540	4240	6360	2120
30 000	30 920	9100	11 800	7200	4720	7080	2360
33 000	33 920	10 000	13 000	7860	5200	7800	2600
36 000	36 920	11 000	14 000	8660	5600	8400	2800
39 000	39 920	12 000	15 000	9460	6000	9000	3000

ABUT. & PIER REACTIONS FOR SLAB BRIDGES

BRIDGE	ABUTMENT REACTION (kN)			PIER REACTION (kN)			
	[1]DEAD LOAD	LIVE LOAD	TOTAL	[2]DEAD LOAD	LIVE LOAD	IMPACT	TOTAL
21 000	971	509	1480	1242	684	205	2131
24 000	1029	518	1547	1466	720	216	2402
27 000	1097	535	1632	1719	746	224	2689
30 000	1172	559	1731	2011	765	230	3006
33 000	1251	582	1833	2302	780	234	3316
36 000	1363	604	1967	2665	790	237	3692
39 000	1475	623	2098	3005	799	235	4039

[1]INCLUDES FORCE OF ABUTMENT FOOTINGS, BARRIER RAIL, FUTURE WEARING SURFACE, AND WINGS, AND IS BASED ON 30° SKEW.

[2]INCLUDES FORCE OF PIER CAP AND IS BASED ON 30° SKEW.

DESIGN CRITERIA

THE 3-SPAN CONTINUOUS CONCRETE SLAB STANDARDS FOR 12 000 mm ROADWAY ARE DESIGNED IN ACCORDANCE WITH THE AASHTO STANDARD SPECIFICATIONS FOR HIGHWAY BRIDGES, SERIES OF 1989, USING THE SERVICE LOAD DESIGN METHOD (ALLOWABLE STRESS DESIGN). ALLOWABLE STRESSES AND LOADING INFORMATION HAVE BEEN CONVERTED TO A METRIC VERSION.

CONCRETE f'c = 24 MPa
REINFORCING STEEL fs = 160 MPa (GRADE 400)
n=9 FOR TENSION STEEL
2n=18 FOR COMPRESSION STEEL
MS-18 LOADING OR AN ALTERNATE MILITARY LOADING OF TWO AXLES 1200 mm APART (107 kN EACH AXLE) PLUS 960 Pa FOR FUTURE WEARING SURFACE.

END SPAN LENGTH IS USED FOR "S" IN LIVE LOAD DISTRIBUTION FORMULA (E=1220+0.06S).

THE TOP 13 mm OF THE SLAB IS CONSIDERED TO BE AN INTEGRAL WEARING SURFACE. THE DEAD LOAD OF THE BARRIER RAIL IS SPREAD OVER THE ENTIRE SLAB.

THE DESIGN OF THE EDGE BEAM INCLUDES 25% OF THE RAIL FORCE TO BE CARRIED BY THE EDGE BEAM.

SLAB MOMENTS DUE TO PASSIVE EARTH PRESSURE ON THE ABUTMENTS ARE CONSIDERED IN GROUP IV LOADING @ 125%.

IF ROCK IS ENCOUNTERED LESS THAN 3.6 m BELOW BOTTOM OF ABUTMENT FOOTING, SPECIAL ANALYSIS MAY BE REQUIRED.

THESE STANDARDS ARE NOT DESIGNED SO THAT ADDITIONAL INTERIOR SPANS MAY BE ADDED WITHOUT CAUSING SOME OVERSTRESSES.

ALL DIMENSIONS IN MILLIMETERS (mm) UNLESS OTHERWISE NOTED OR SHOWN.

DATA SHEET FOR 12 000 mm ROADWAY SLAB BRIDGES

IOWA DEPARTMENT OF TRANSPORTATION - HIGHWAY DIVISION

HM4440.SOI: THIS SHEET ISSUED 9-1-95.

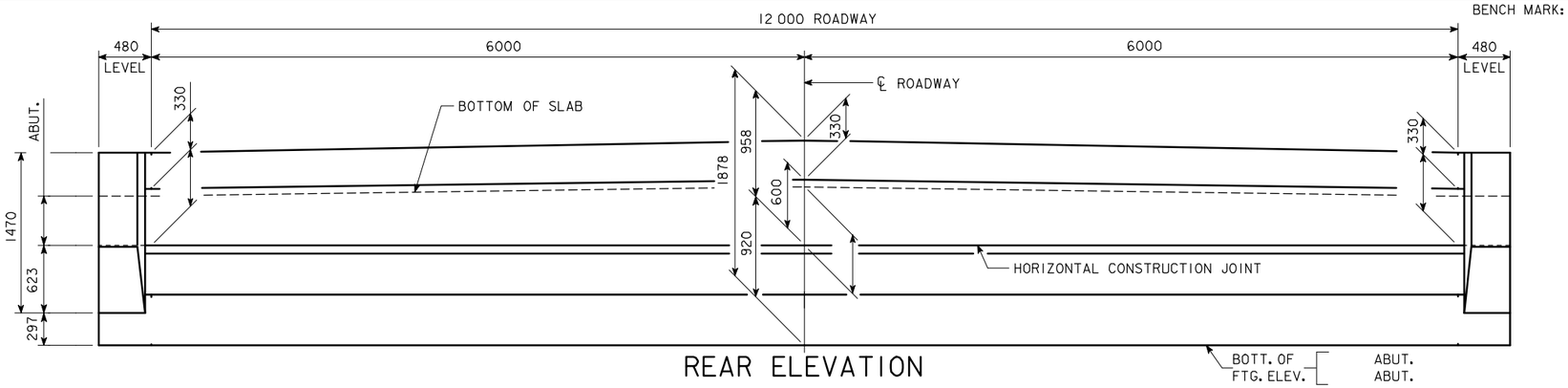

REAR ELEVATION

SUBSTRUCTURE NOTES:

MINIMUM CLEAR DISTANCE FROM FACE OF CONCRETE TO NEAR REINFORCING BAR IS TO BE 50 mm UNLESS OTHERWISE NOTED OR SHOWN.

THE TRANSVERSE REBARS ARE DETAILED WITH A SPLICE LAP AT THE CONTRACTOR'S OPTION, THIS LAP MAY BE ELIMINATED BY FURNISHING FULL LENGTH BARS WITH NO REDUCTION IN PAY MASS FOR SAME.

THE DESIGN BEARING FOR THE ABUTMENT PILES IS ?? TONS.
THE DESIGN BEARING FOR THE PIER PILES IS ?? TONS.

NOTE: BARRIER RAIL NOT SHOWN IN DETAILS.

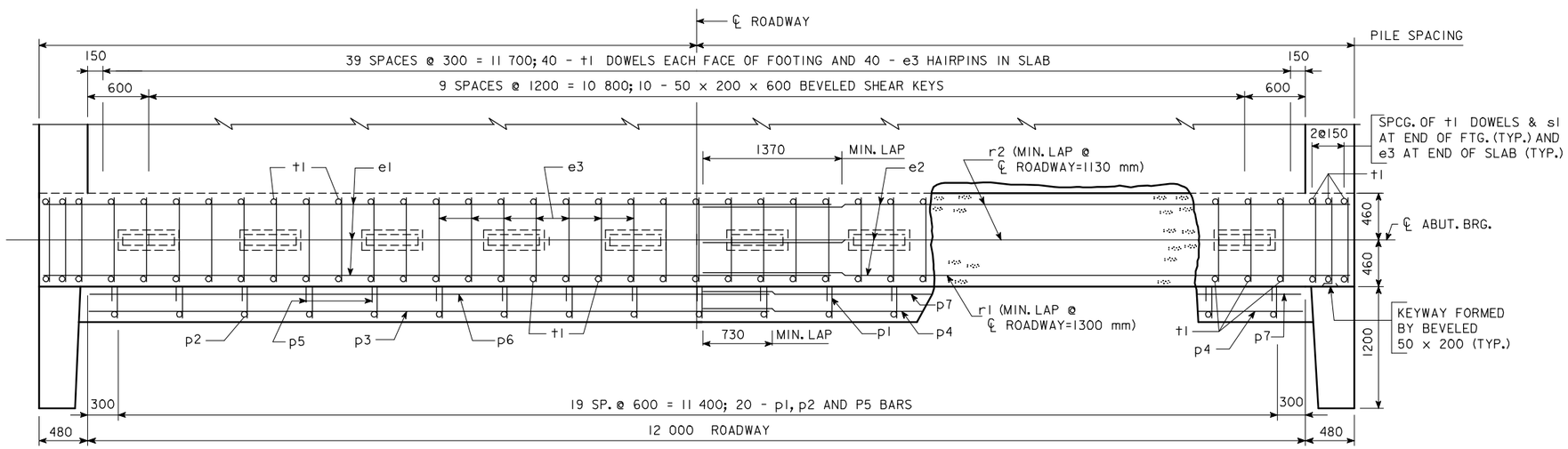

PLAN AT ABUTMENT

NOTE: WING REINFORCING AND RAIL NOT SHOWN.

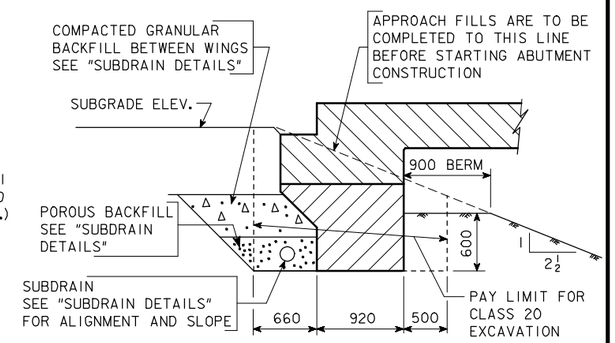

ABUTMENT EXCAVATION DETAILS

SECTION NORMAL TO ℄ ABUT. BRG.

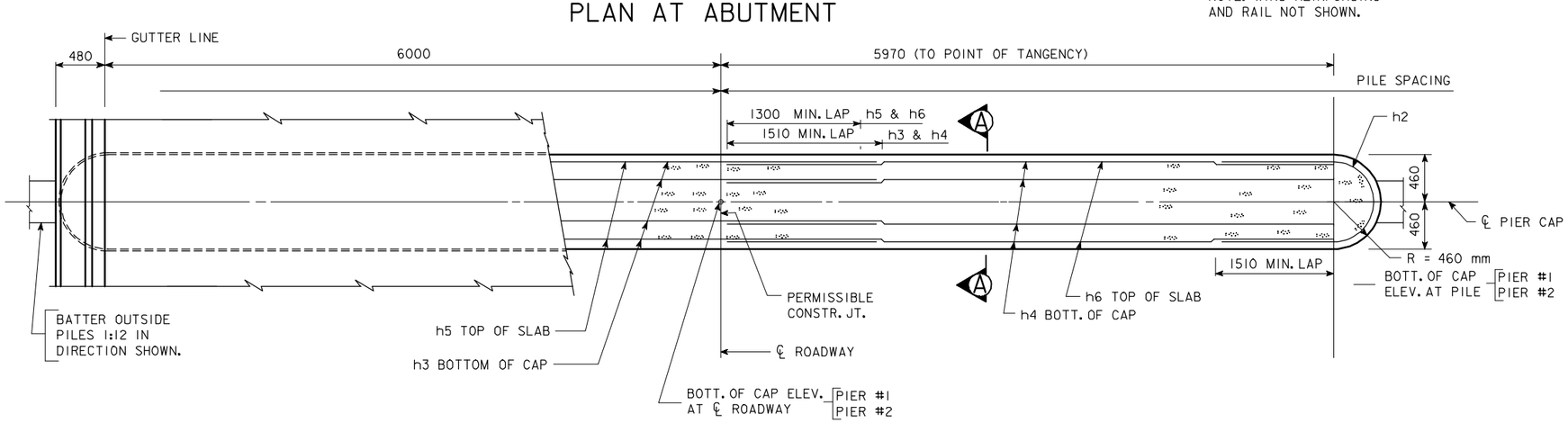

PIER PLAN

NOTE: BARRIER RAIL NOT SHOWN IN DETAILS.

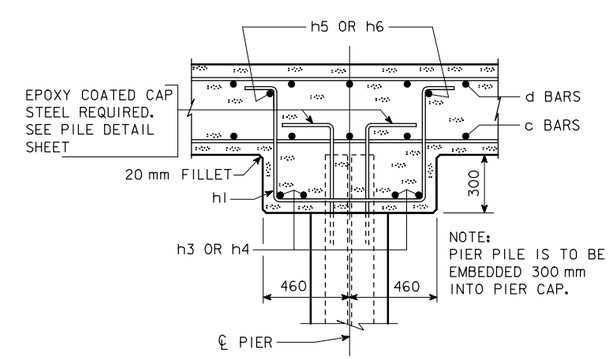

SECTION A-A

IOWA DEPARTMENT OF TRANSPORTATION - HIGHWAY DIVISION
DESIGN SHEET NO. ____ OF ____ FILE NO. _____ DESIGN NO. _____

REVISED 07-05 - PAVING NOTCH EXTENDED TO INTERCEPT THE WINGS. LONGIT. BARS EXTENDED 50 mm CLEAR OF WINGS.
HM441.SOI: THIS SHEET ISSUED 9-1-95.

DESIGN TEAM	CONCRETE SLAB, SUBSTRUCTURE DETAILS - 12 000 mm ROADWAY - 0° SKEW	STANDARD SHEET M4441	COUNTY	PROJECT NUMBER	SHEET NUMBER

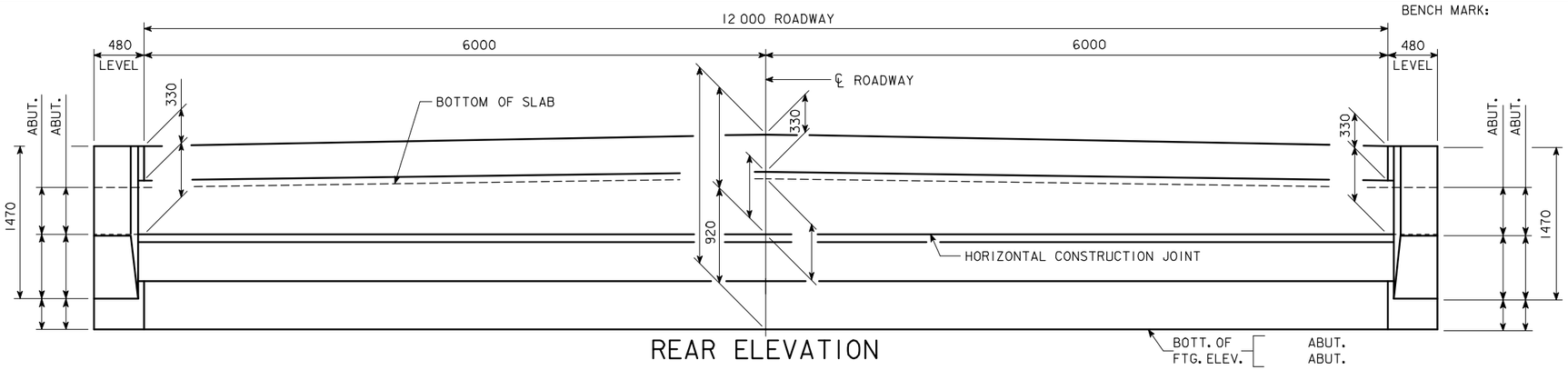

REAR ELEVATION

SUBSTRUCTURE NOTES:

MINIMUM CLEAR DISTANCE FROM FACE OF CONCRETE TO NEAR REINFORCING BAR IS TO BE 50 mm UNLESS OTHERWISE NOTED OR SHOWN.

THE TRANSVERSE REBARS ARE DETAILED WITH A SPLICE LAP AT THE CONTRACTOR'S OPTION, THIS LAP MAY BE ELIMINATED BY FURNISHING FULL LENGTH BARS WITH NO REDUCTION IN PAY MASS FOR SAME.

THE DESIGN BEARING FOR THE ABUTMENT PILES IS ?? TONS.
THE DESIGN BEARING FOR THE PIER PILES IS ?? TONS.

NOTE: BARRIER RAIL NOT SHOWN IN DETAILS.

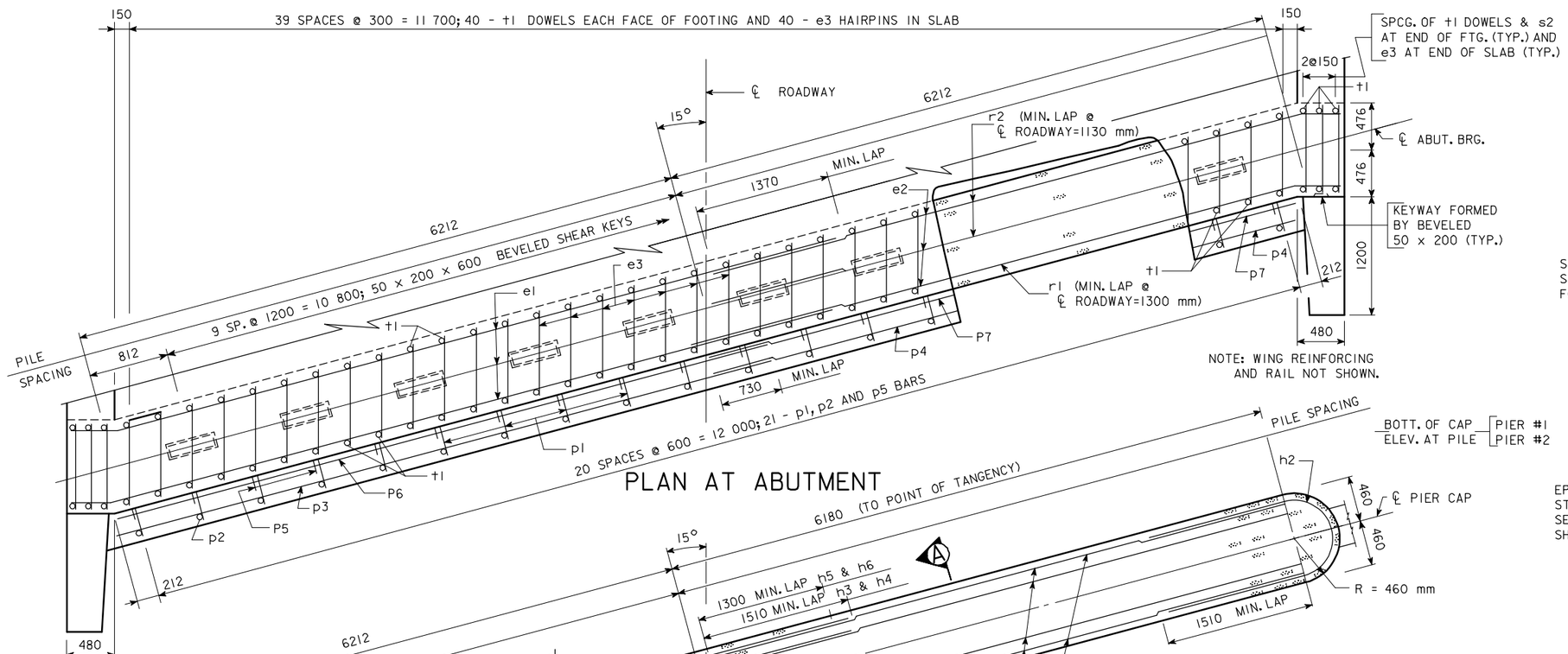

PLAN AT ABUTMENT

PIER PLAN

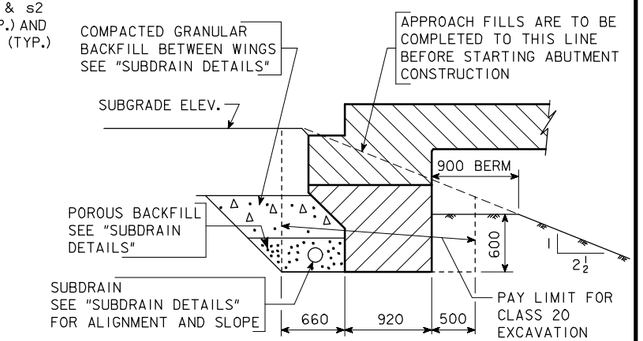

ABUTMENT EXCAVATION DETAILS

SECTION NORMAL TO ℄ ABUT. BRG.

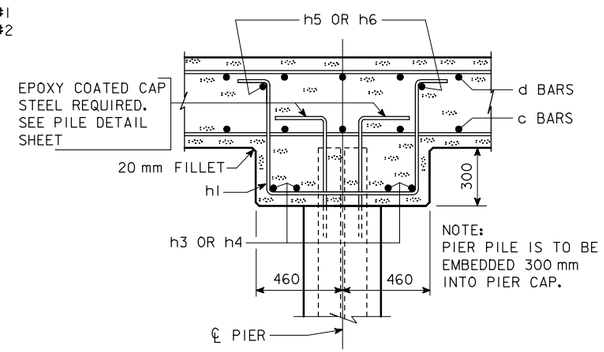

SECTION A-A

IOWA DEPARTMENT OF TRANSPORTATION - HIGHWAY DIVISION

DESIGN SHEET NO. ____ OF ____ FILE NO. _____ DESIGN NO. _____

REVISED 07-05 - PAVING NOTCH EXTENDED TO INTERCEPT THE WINGS. LONGIT. BARS EXTENDED 50 mm CLEAR OF WINGS.
HM4442.SOI: THIS SHEET ISSUED 9-1-95.

DESIGN TEAM	CONCRETE SLAB, SUBSTRUCTURE DETAILS - 12 000 mm ROADWAY - 15° SKEW R.A.	STANDARD SHEET M4442	COUNTY	PROJECT NUMBER	SHEET NUMBER

24-JAN-2006 15:06 ajeffer W:\Projects\0000006002\BRFinal\MetricCCSBridges.dgn m4442

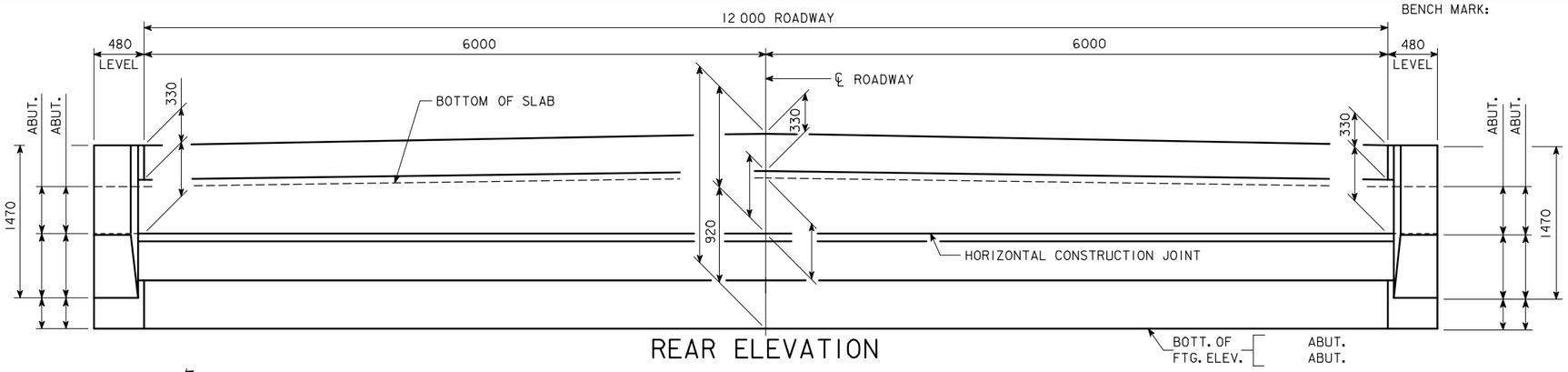

REAR ELEVATION

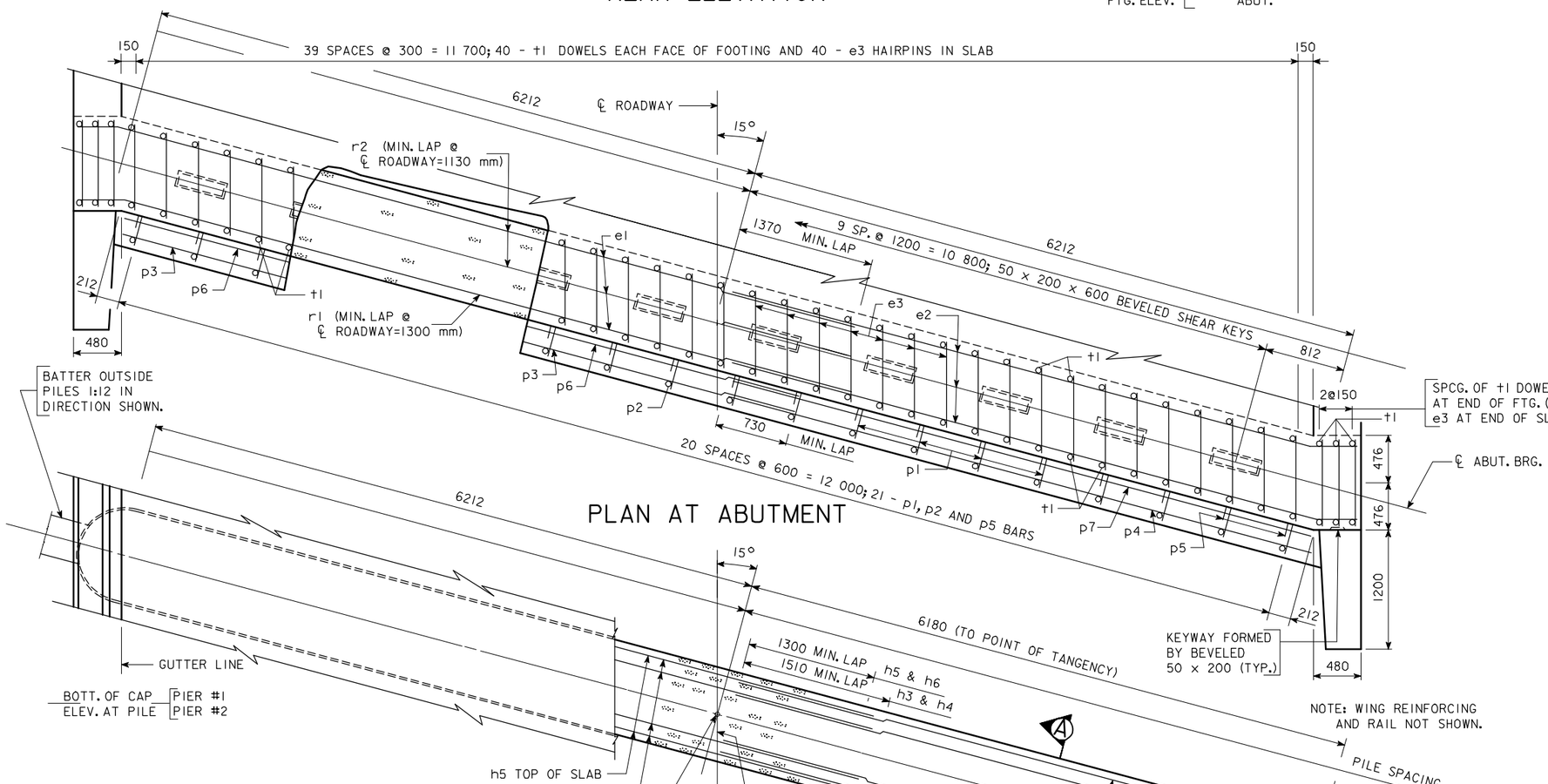

PLAN AT ABUTMENT

PIER PLAN

SUBSTRUCTURE NOTES:

MINIMUM CLEAR DISTANCE FROM FACE OF CONCRETE TO NEAR REINFORCING BAR IS TO BE 50 mm UNLESS OTHERWISE NOTED OR SHOWN.

THE TRANSVERSE REBARS ARE DETAILED WITH A SPLICE LAP AT THE CONTRACTOR'S OPTION, THIS LAP MAY BE ELIMINATED BY FURNISHING FULL LENGTH BARS WITH NO REDUCTION IN PAY MASS FOR SAME.

THE DESIGN BEARING FOR THE ABUTMENT PILES IS ?? TONS.
THE DESIGN BEARING FOR THE PIER PILES IS ?? TONS.

NOTE: BARRIER RAIL NOT SHOWN IN DETAILS.

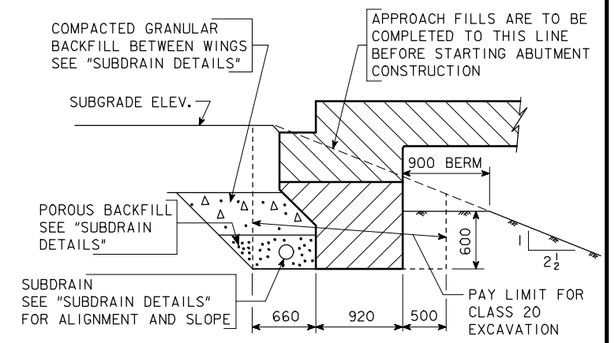

ABUTMENT EXCAVATION DETAILS

SECTION NORMAL TO ℄ ABUT. BRG.

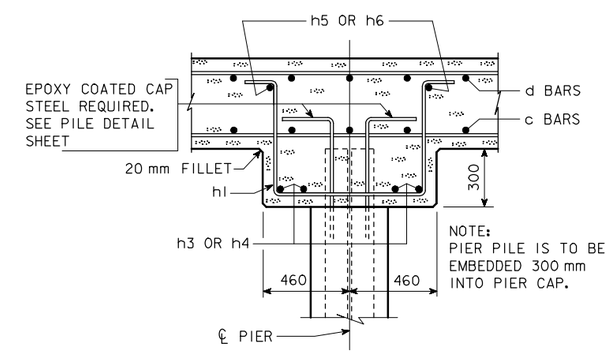

SECTION A-A

IOWA DEPARTMENT OF TRANSPORTATION - HIGHWAY DIVISION
DESIGN SHEET NO. ____ OF ____ FILE NO. _____ DESIGN NO. _____

REVISED 07-05 - PAVING NOTCH EXTENDED TO INTERCEPT THE WINGS. LONGIT. BARS EXTENDED 50 mm CLEAR OF WINGS.
HM4443.SOI: THIS SHEET ISSUED 9-1-95.

DESIGN TEAM	CONCRETE SLAB, SUBSTRUCTURE DETAILS - 12 000 mm ROADWAY - 15° SKEW L.A.	STANDARD SHEET M4443	COUNTY	PROJECT NUMBER	SHEET NUMBER

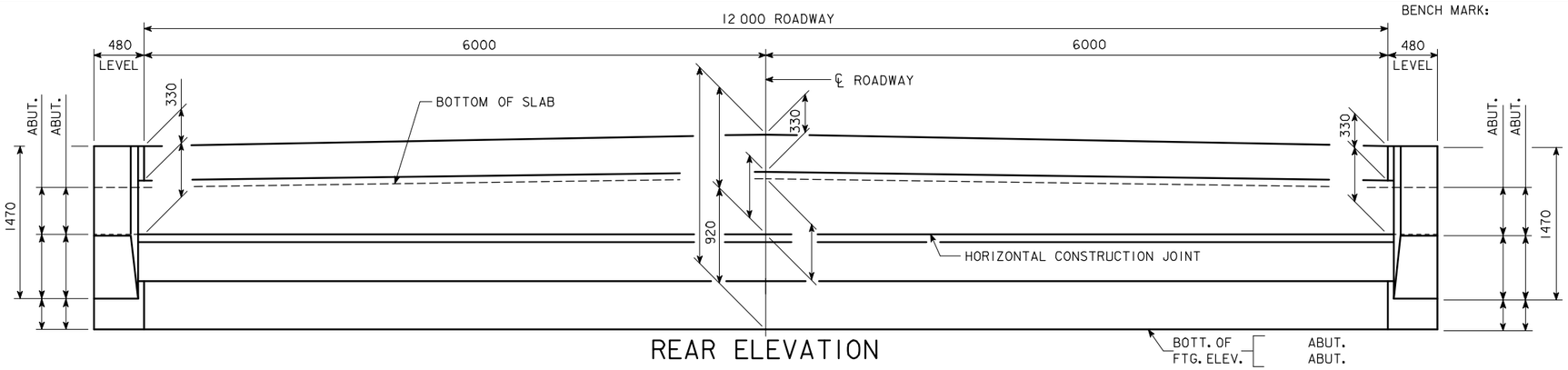

REAR ELEVATION

SUBSTRUCTURE NOTES:

MINIMUM CLEAR DISTANCE FROM FACE OF CONCRETE TO NEAR REINFORCING BAR IS TO BE 50 mm UNLESS OTHERWISE NOTED OR SHOWN.

THE TRANSVERSE REBARS ARE DETAILED WITH A SPLICE LAP AT THE CONTRACTOR'S OPTION, THIS LAP MAY BE ELIMINATED BY FURNISHING FULL LENGTH BARS WITH NO REDUCTION IN PAY MASS FOR SAME.

THE DESIGN BEARING FOR THE ABUTMENT PILES IS ?? TONS.
THE DESIGN BEARING FOR THE PIER PILES IS ?? TONS.

NOTE: BARRIER RAIL NOT SHOWN IN DETAILS.

ABUTMENT EXCAVATION DETAILS

SECTION NORMAL TO ℄ ABUT. BRG.

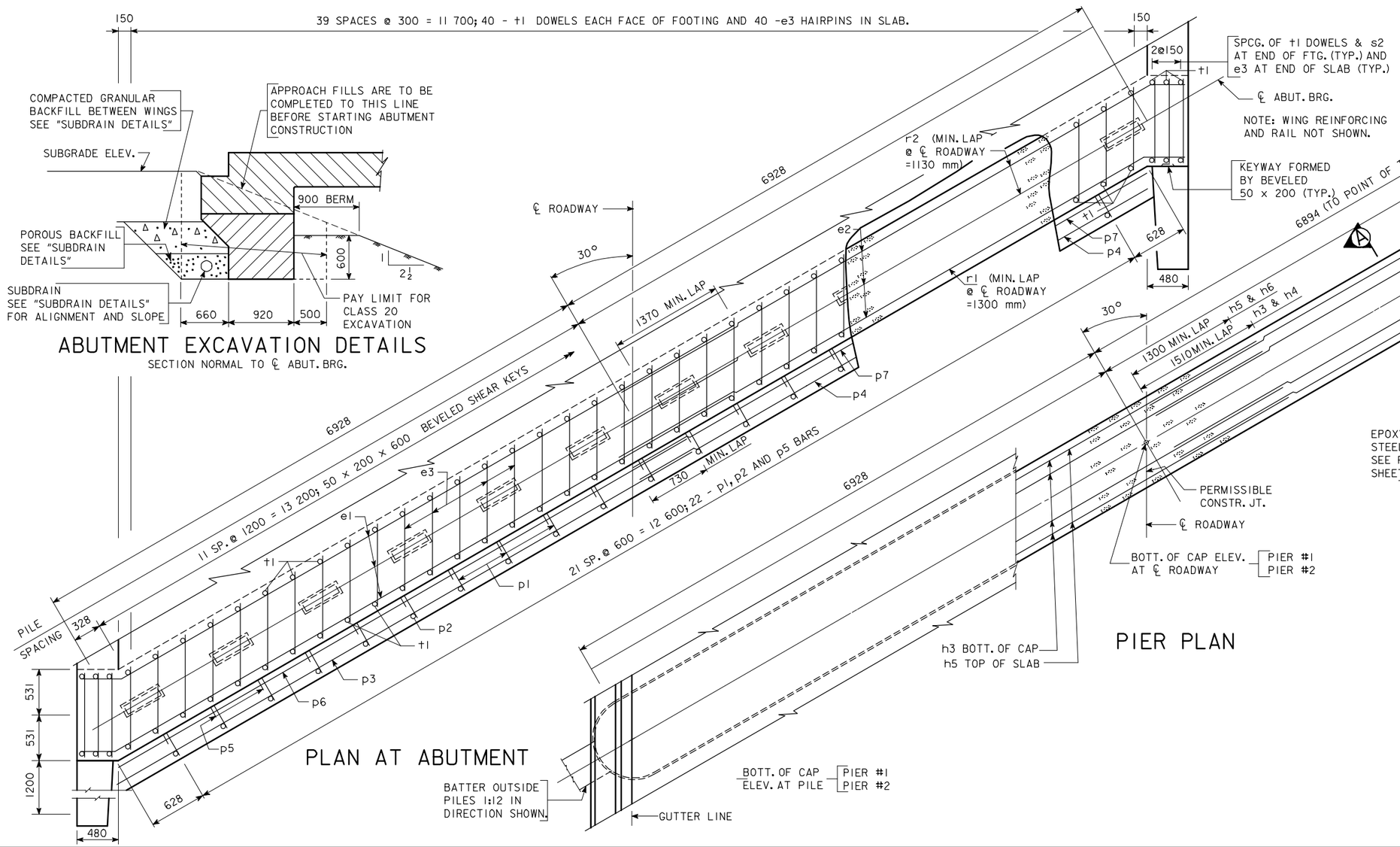

PLAN AT ABUTMENT

PIER PLAN

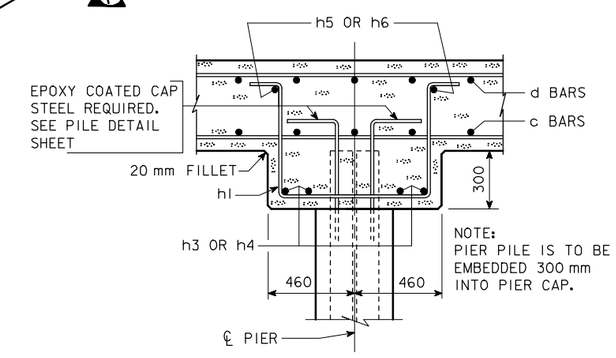

SECTION A-A

IOWA DEPARTMENT OF TRANSPORTATION - HIGHWAY DIVISION

DESIGN SHEET NO. ____ OF ____ FILE NO. _____ DESIGN NO. _____

DESIGN TEAM	CONCRETE SLAB, SUBSTRUCTURE DETAILS - 12 000 mm ROADWAY - 30° SKEW R.A.	STANDARD SHEET M4444	COUNTY	PROJECT NUMBER	SHEET NUMBER

REVISED 07-05 - PAVING NOTCH EXTENDED TO INTERCEPT THE WINGS. LONGIT. BARS EXTENDED 50 mm CLEAR OF WINGS.
HM4444.SOI: THIS SHEET ISSUED 9-1-95.

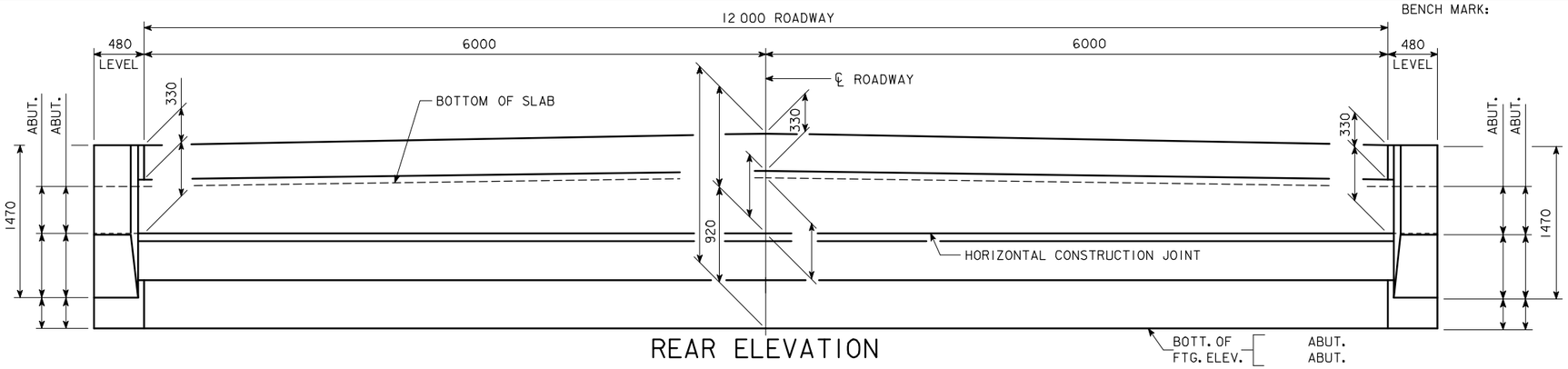

REAR ELEVATION

SUBSTRUCTURE NOTES:

MINIMUM CLEAR DISTANCE FROM FACE OF CONCRETE TO NEAR REINFORCING BAR IS TO BE 50 mm UNLESS OTHERWISE NOTED OR SHOWN.

THE TRANSVERSE REBARS ARE DETAILED WITH A SPLICE LAP AT THE CONTRACTOR'S OPTION, THIS LAP MAY BE ELIMINATED BY FURNISHING FULL LENGTH BARS WITH NO REDUCTION IN PAY MASS FOR SAME.

THE DESIGN BEARING FOR THE ABUTMENT PILES IS ?? TONS.
THE DESIGN BEARING FOR THE PIER PILES IS ?? TONS.

NOTE: BARRIER RAIL NOT SHOWN IN DETAILS.

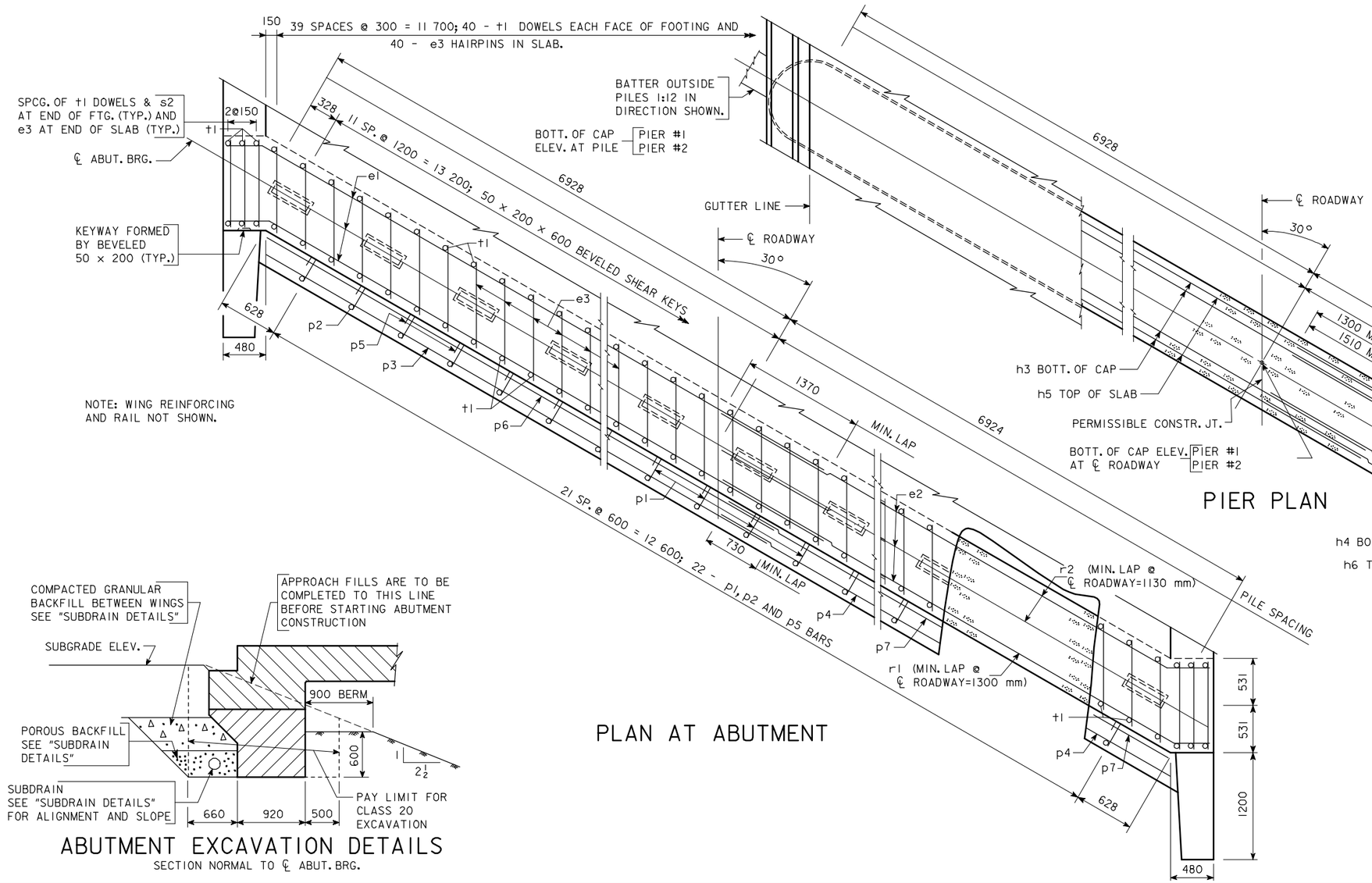

PIER PLAN

PLAN AT ABUTMENT

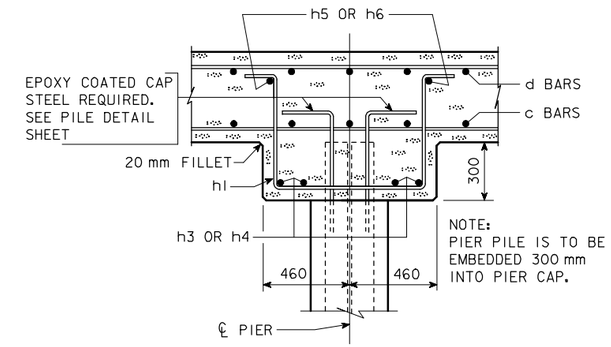

SECTION A-A

ABUTMENT EXCAVATION DETAILS

SECTION NORMAL TO ℄ ABUT. BRG.

IOWA DEPARTMENT OF TRANSPORTATION - HIGHWAY DIVISION

DESIGN SHEET NO. ____ OF ____ FILE NO. _____ DESIGN NO. _____

DESIGN TEAM	CONCRETE SLAB, SUBSTRUCTURE DETAILS - 12 000 mm ROADWAY - 30° SKEW L.A.	STANDARD SHEET M4445	COUNTY	PROJECT NUMBER	SHEET NUMBER

REVISED 07-05 - PAVING NOTCH EXTENDED TO INTERCEPT THE WINGS. LONGIT. BARS EXTENDED 50 mm CLEAR OF WINGS.
HM4445.SOI: THIS SHEET ISSUED 9-1-95.

24-JAN-2006 15:07 ajeffer W:\Projects\0000006002\BRFinal\MetricCCSBridges.dgn m4445

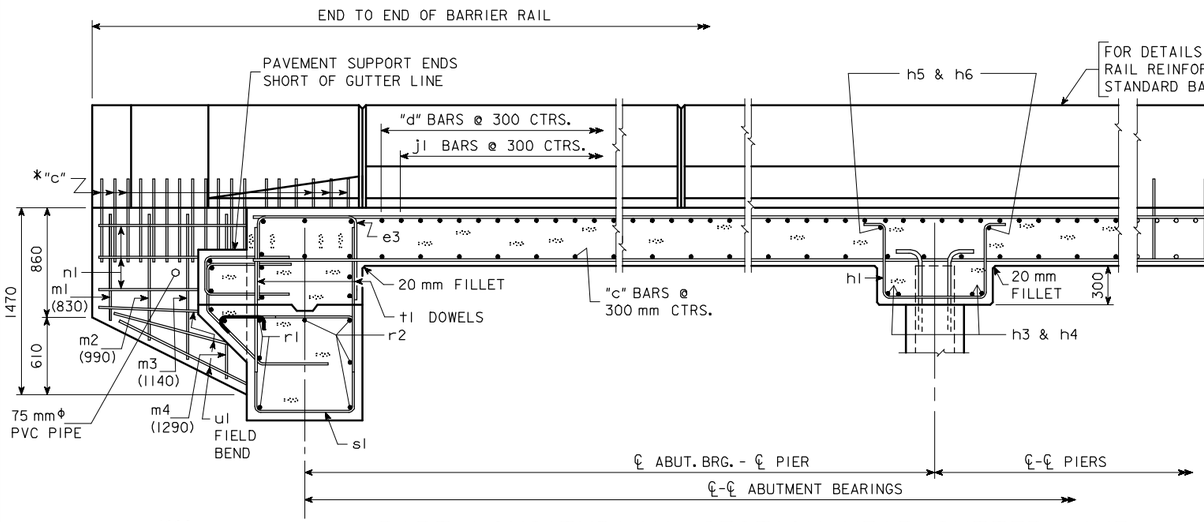

PART LONGITUDINAL SECTION NEAR GUTTER LINE

NOTE:
PLUG 75 mm PVC PIPE WITH EXPANDING FOAM PRIOR TO BACKFILLING BEHIND ABUTMENTS.

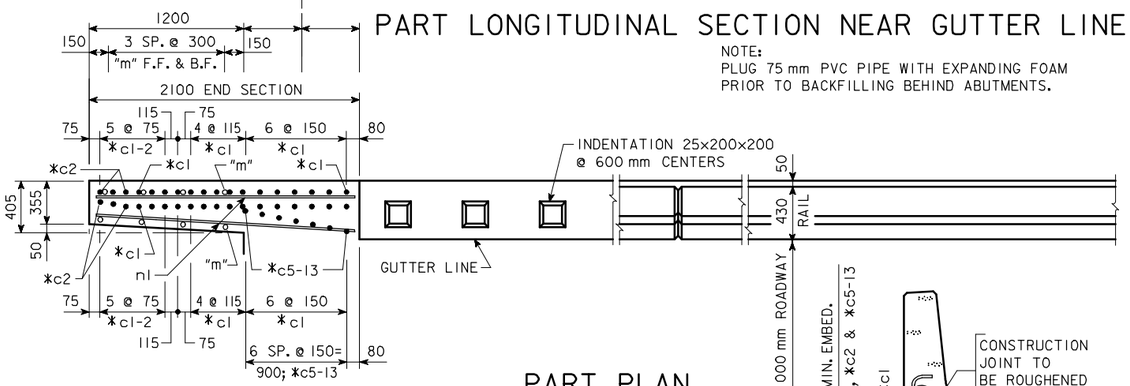

PART PLAN
(END SECTION OF RAIL NOT SHOWN)

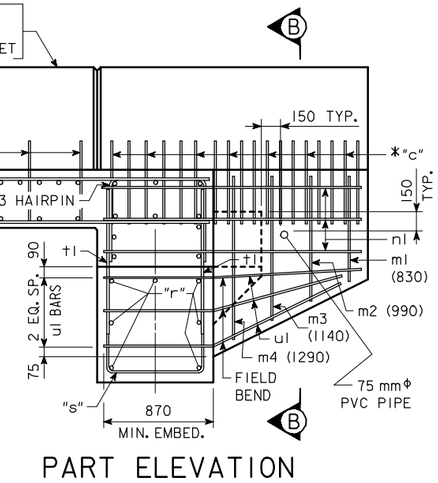

PART ELEVATION

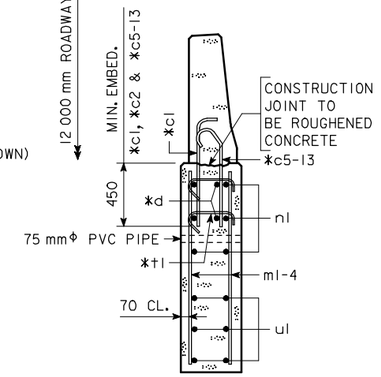

SECTION B-B

* NOTE: SEE END SECTION DETAILS IN THESE PLANS FOR DETAILS OF BARRIER RAIL END SECTION. REINFORCING BARS "c1", "c2", "c5-13", "d" & "tl" ARE INCLUDED IN THE SUPERSTRUCTURE QUANTITIES.

NOTE: "ml-4" & "nl" BARS ARE INCLUDED IN SUPERSTRUCTURE BAR LIST. "c", "d" & "tl" BARS ARE INCLUDED IN BARRIER RAIL BAR LIST.

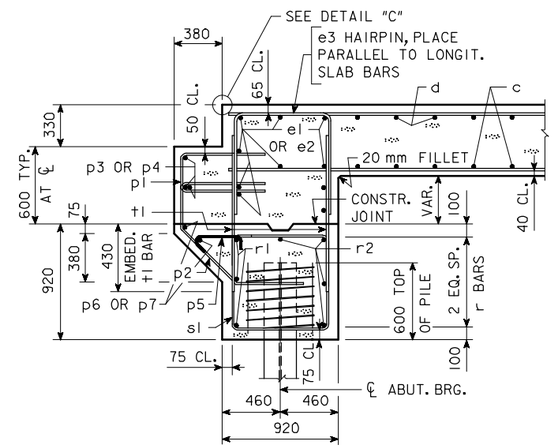

SECTION NORMAL TO ABUTMENT AT ℄

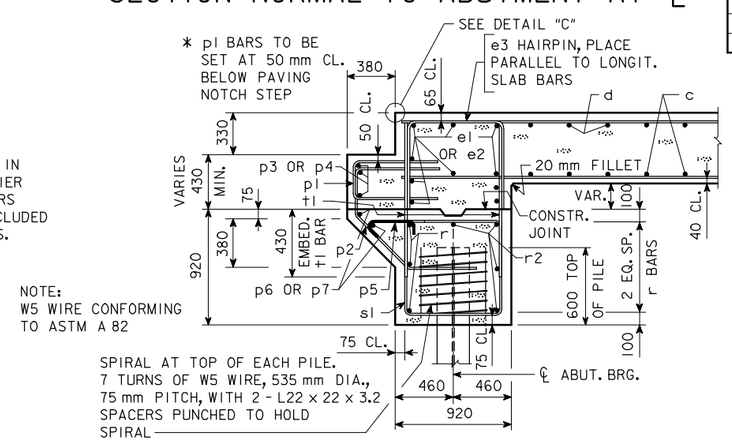

NOTE:
W5 WIRE CONFORMING TO ASTM A 82

SECTION NORMAL TO ABUTMENT NEAR GUTTERLINE

NOTE THE LOCATION/RELATIONSHIP OF e1 AND e2 BARS IN THE BACKFACE OF THE DIAPHRAGM WITH THE p1 AND p2 BARS SHALL BE MAINTAINED AS THE DIAPHRAGM CHANGES DEPTH.

SUPERSTRUCTURE NOTES:

THIS BRIDGE IS DESIGNED FOR MS-18 LOADING PLUS 960 Pa FOR FUTURE WEARING SURFACE.

THE BRIDGE FLOOR AS SHOWN INCLUDES 13 mm INTEGRAL WEARING SURFACE. MINIMUM CLEAR DISTANCE FROM FACE OF CONCRETE TO NEAR REINFORCING BAR IS TO BE 50 mm UNLESS OTHERWISE NOTED OR SHOWN.

ALL EXPOSED CORNERS OF 90° OR SHARPER ARE TO BE FILLETED WITH A 20 mm DRESSED AND BEVELED STRIP.

SOME OF THE ABUTMENT REINFORCING BARS SHALL BE EPOXY COATED. (SEE ABUTMENT BAR LIST ON THIS SHEET.)

THE TRANSVERSE REBARS ARE DETAILED WITH A SPLICE LAP. AT THE CONTRACTOR'S OPTION, THIS LAP MAY BE ELIMINATED BY FURNISHING FULL LENGTH BARS WITH NO REDUCTION IN PAY WEIGHT FOR SAME.

TOP MAT OF REINFORCING STEEL IS TO BE SUPPORTED BY INDIVIDUAL METAL BAR CHAIRS SPACED AT NOT MORE THAN 900 mm CENTERS LONGITUDINALLY AND TRANSVERSELY. THE BOTTOM MAT OF REINFORCING STEEL IS TO BE SUPPORTED BY INDIVIDUAL METAL BAR CHAIRS SPACED AT NOT MORE THAN 900 mm CENTERS LONGITUDINALLY AND TRANSVERSELY, OR BY CONTINUOUS ROWS OF METAL HIGH CHAIRS OR SLAB BOLSTERS SPACED 1200 mm APART. BAR CHAIRS SUPPORTING SLAB REINFORCING STEEL ARE TO BE EPOXY COATED.

THE CONCRETE SLAB IS TO BE PLACED WITH A MINIMUM OF CONSTRUCTION JOINTS. PROCEDURES FOR PLACING SLAB CONCRETE SHALL BE SUBMITTED FOR APPROVAL TOGETHER WITH A STATEMENT OF THE PROPOSED METHOD AND EVIDENCE THAT THE CONTRACTOR POSSESSES THE NECESSARY EQUIPMENT AND FACILITIES TO ACCOMPLISH THE REQUIRED RESULT. SLAB FALSEWORK SHALL BE REMOVED PRIOR TO CONSTRUCTION OF THE BARRIER RAILS, UNLESS SLAB CONSTRUCTION IS STAGED. SLAB FALSEWORK SHALL NOT BE REMOVED UNTIL THE FULL WIDTH SLAB HAS BEEN PLACED AND HAS ATTAINED THE AGE AND STRENGTH REQUIRED BY THE STANDARD SPECIFICATIONS.

REINFORCING BAR LIST-ONE ABUTMENT

	MARK	SIZE	LOCATION	SHAPE	NO.	LENGTH	MASS
EPOXY-COATED	p2	15	PAVING SUPPORT, TRANSV.			2850	
	p5	10	PAVING SUPPORT, TRANSV.			560	
	p6	15	PAVING SUPPORT, LONGIT., SIDE "A"	—	4		
	p7	15	PAVING SUPPORT, LONGIT., SIDE "B"	—	4		
	r1	25	FOOTING, LONGIT., B.F.H.	—	6		
	s1	15	FOOTING, HOOPS			3380	
	s2	15	FOOTING, HOOPS @ ENDS		6		
	t1	20	FOOTING TO SLAB DOWELS	—	92	1090	236
			REINFORCING STEEL, EPOXY-COATED - TOTAL (kg)				
NON-COATED	r2	25	FOOTING, LONGIT., F.F.H.	—	8		
	u1	15	WING, LONGITUDINAL	—	12	2030	38
			PILE SPIRAL - SIZE W5 WIRE AT 3 kg/SPIRAL			12 000	
			SPIRAL SPACERS L22x22x3.2 (0.6 kg/SPACER)	—		560	
			REINFORCING STEEL, NON-COATED - TOTAL (kg)				

BENT BAR DETAILS

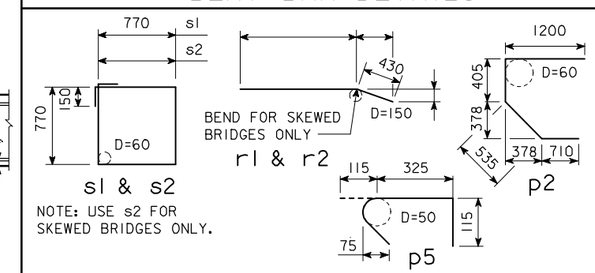

NOTE: ALL DIMENSIONS ARE OUT TO OUT. D=PIN DIAMETER.

ESTIMATED QUANTITIES-TWO ABUTMENTS

ITEM		UNITS	QUANTITY
STRUCTURAL CONCRETE (BRIDGE)		m^3	
REINFORCING STEEL, EPOXY-COATED		kg	
REINFORCING STEEL		kg	
CLASS 20 EXCAVATION		m^3	
	FURNISH	m	
	DRIVE	m	

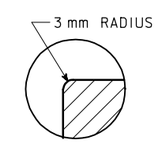

DETAIL "C"

IOWA DEPARTMENT OF TRANSPORTATION - HIGHWAY DIVISION
DESIGN SHEET NO. ____ OF ____ FILE NO. _____ DESIGN NO. _____

REVISED 07-05 - 75 mm PVC PIPE ADDED TO WINGS AND NOTE.
HM4446.SOI: THIS SHEET ISSUED 9-1-95.

DESIGN TEAM	CONCRETE SLAB, LONGIT. SECTION - 12 000 mm ROADWAY	STANDARD SHEET M4446	COUNTY	PROJECT NUMBER	SHEET NUMBER

24-JAN-2006 15:07 ajeffer W:\Projects\0000006002\BRFinal\MetricCCSBridges.dgn m4446

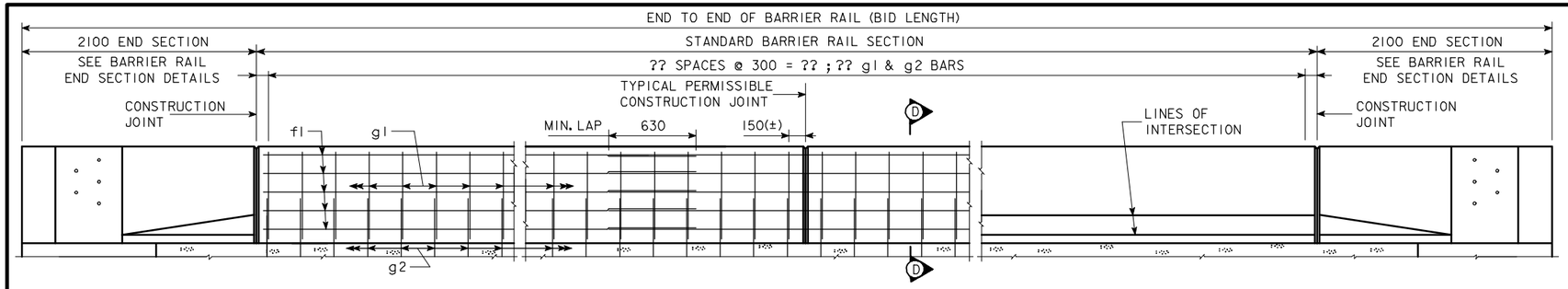

ELEVATION OF BARRIER RAIL

EPOXY COATED REINFORCING STEEL - TWO RAILS

SECTION	MARK	SIZE	LOCATION	SHAPE	NUMBER	LENGTH	MASS
2 STANDARD SECTIONS	g1	15	RAIL, VERTICAL			1750	
	g2	15	RAIL TO SLAB				
	f1	15	RAIL, LONGITUDINAL				
	BARRIER RAIL END SECTION				4 AT 172 kg.		688
TOTAL MASS (kg) OF RE-BAR IN RAIL (INCLUDE WITH SUPERSTRUCTURE REINFORCING)						TOTAL (kg.)	

BENT BAR DETAILS

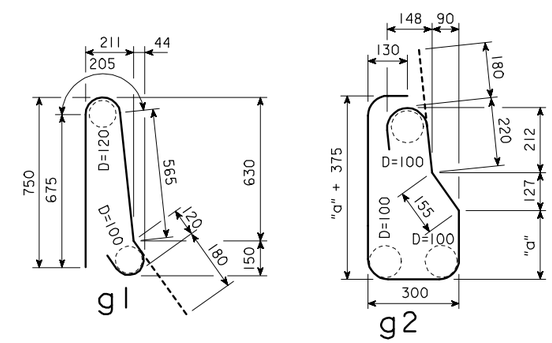

NOTE:
ALL DIMENSIONS ARE OUT TO OUT. D = PIN DIAMETER.
D = 100 mm UNLESS SHOWN.

g2 BARS		
BRIDGE	"a"	LENGTH
21 000	355	2070
24 000	375	2110
27 000	400	2160
30 000	430	2220
33 000	455	2270
36 000	495	2350
39 000	525	2410

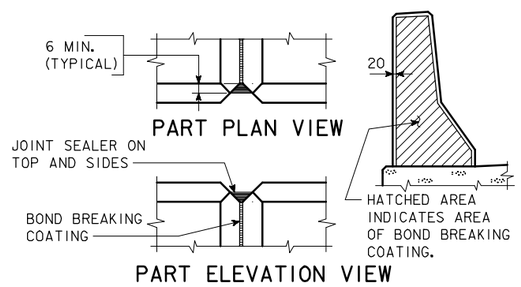

BARRIER RAIL JOINT DETAILS

METERS OF BARRIER RAIL

BRIDGE LENGTH		21 000	24 000	27 000	30 000	33 000	36 000	39 000
CONCRETE BARRIER RAIL (m)	0° SKEW	48.64	54.64	60.64	66.64	72.64	78.64	84.64
	15° SKEW	48.70	54.70	60.70	66.70	72.70	78.70	84.70
	30° SKEW	48.92	54.92	60.92	66.92	72.92	78.92	84.92

CONCRETE QUANTITY= ?? m^3
(INCLUDES 4 END SECTIONS AT 0.47 m^3 EACH)

BARRIER RAIL NOTES:

MINIMUM CLEAR DISTANCE FROM FACE OF CONCRETE TO NEAR REINFORCING BAR IS TO BE 50 mm UNLESS OTHERWISE NOTED OR SHOWN.

ALL EXPOSED CORNERS OF 90° OR SHARPER ARE TO BE FILLETED WITH A 20 mm DRESSED AND BEVELED STRIP.

THE STANDARD SECTION OF BARRIER RAIL MAY BE PLACED CONTINUOUSLY OR IN SECTIONS. THERE SHALL BE AT LEAST 6000 mm BETWEEN CONSTRUCTION JOINTS. CONSTRUCTION JOINT CONTACT SURFACES ARE TO BE COATED WITH AN APPROVED BOND BREAKER. THE JOINT SEALER SHALL BE LIGHT GRAY NONSAG LATEX CAULKING SEALER MARKETED FOR OUTDOOR USE. NO TESTING OR CERTIFICATION REQUIRED.

COST OF THE JOINT SEALER AND BOND BREAKER SHALL BE INCLUDED IN THE PRICE BID FOR BARRIER RAIL.

THE CONCRETE BARRIER RAIL IS TO BE BID ON A METRIC BASIS. THE NUMBER OF METERS OF BARRIER RAIL INSTALLED WILL BE PAID FOR AT THE CONTRACT PRICE PER METER BASED ON PLAN QUANTITIES. PRICE BID FOR CONCRETE BARRIER RAILING SHALL BE FULL COMPENSATION FOR FURNISHING ALL MATERIAL, EXCLUDING REINFORCING STEEL, AND ALL OF THE EQUIPMENT AND LABOR REQUIRED TO ERECT THE RAIL IN ACCORDANCE WITH THESE PLANS AND CURRENT SPECIFICATIONS. IF CONDUIT IS REQUIRED IN THIS PLAN THE RIGID STEEL CONDUIT, JUNCTION BOXES AND FITTINGS INCLUDING LABOR AND ANY ADDITIONAL WORK TO DO THE INSTALLATION IS CONSIDERED INCIDENTAL TO THE COST OF THE RAILING.

ALL BARRIER RAIL REINFORCING STEEL IS TO BE INCLUDED WITH THE SUPERSTRUCTURE REINFORCING STEEL.

TOP OF BARRIER RAIL IS TO BE PARALLEL TO THEORETICAL ℄ GRADE.

LONGITUDINAL BARS ARE CONTINUOUS THRU PERMISSIBLE CONSTRUCTION JOINT.

CROSS SECTIONAL AREA OF THE STANDARD SECTION OF THE BARRIER RAIL = 0.263 m^2.

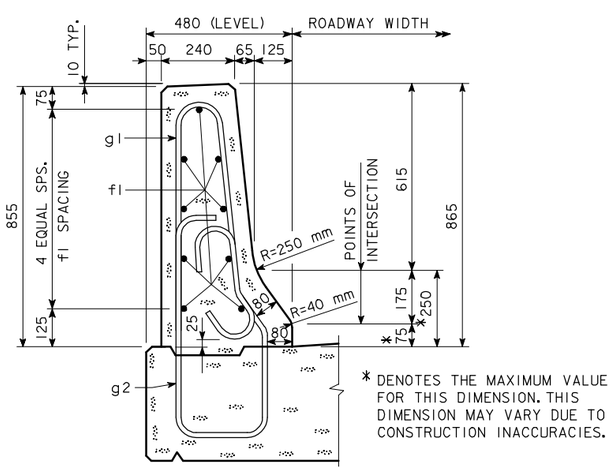

* DENOTES THE MAXIMUM VALUE FOR THIS DIMENSION. THIS DIMENSION MAY VARY DUE TO CONSTRUCTION INACCURACIES.

PART SECTION D-D

NOTE:
SEE BARRIER RAIL END SECTION WITH 1200 mm WING IN THESE PLANS FOR DETAILS NOT SHOWN ON THIS SHEET.

IOWA DEPARTMENT OF TRANSPORTATION - HIGHWAY DIVISION
DESIGN SHEET NO. ____ OF ____ FILE NO. _____ DESIGN NO. _____

REVISED - 09-01 BARRIER RAIL END SECTION DETAILS MOVED TO STD. SHEET M1017.
HM4447.S01: THIS SHEET ISSUED 9-1-95.

DESIGN TEAM	CONCRETE SLAB BARRIER RAIL - 12 000 mm ROADWAY	STANDARD SHEET M4447	COUNTY	PROJECT NUMBER	SHEET NUMBER

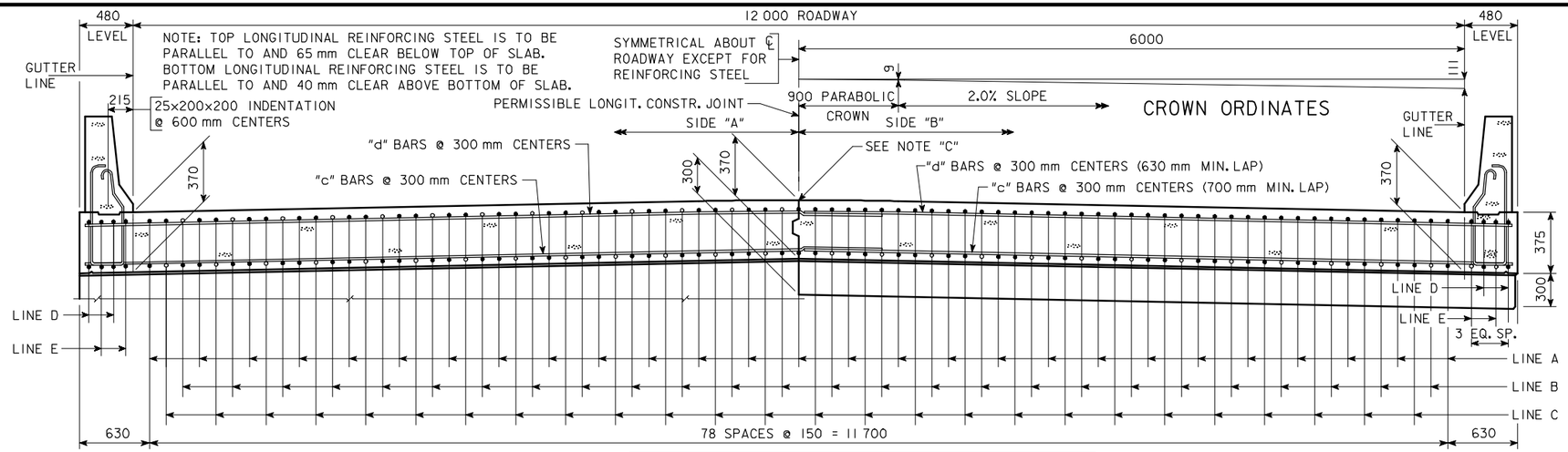

HALF SECTION NEAR ABUTMENT

NOTE "C": IF PERMISSIBLE LONGITUDINAL JOINT IS USED, BARS ON ℄ ROADWAY MAY BE SHIFTED TO CLEAR JOINT BY 25 mm.

SLAB CROSS-SECTIONAL AREA-SIDE "A" =	2.423 m^2
SLAB CROSS-SECTIONAL AREA-SIDE "B" =	2.423 m^2
BARRIER RAIL CROSS-SECTIONAL AREA-ONE RAIL =	0.263 m^2

HALF SECTION NEAR PIER

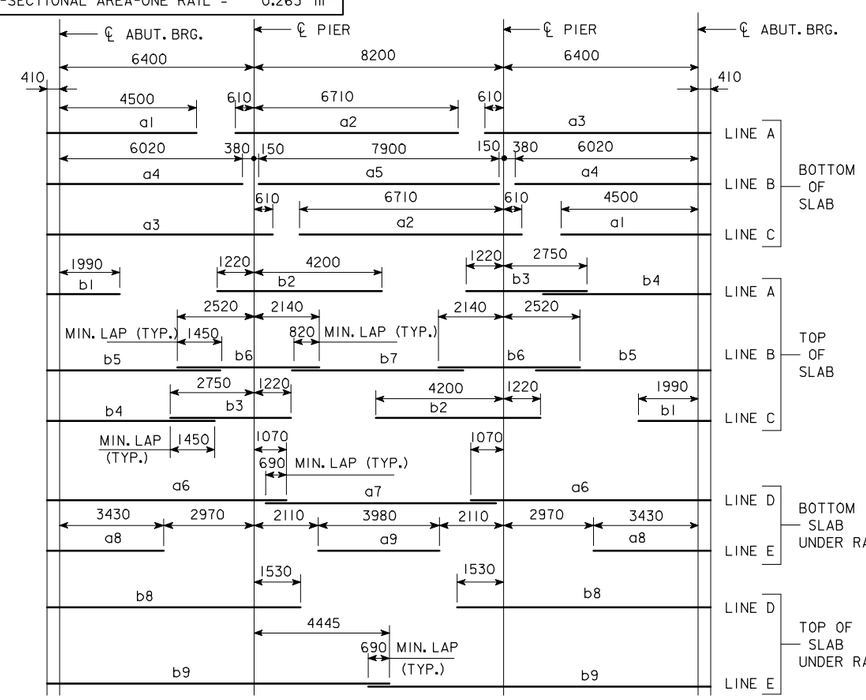

PLACEMENT FOR LONGITUDINAL REINFORCEMENT

* WING REINFORCING MAY BE UNCOATED

EPOXY COATED REINFORCING BAR LIST SUPERSTRUCTURE

MARK	SIZE	LOCATION	SHAPE	No.	LENGTH	MASS
a1	25	BOTT. OF SLAB, LONGIT.	——	53	4910	1021
a2	25	BOTT. OF SLAB, LONGIT.	——	53	7320	1523
a3	25	BOTT. OF SLAB, LONGIT.	——	53	7420	1544
a4	25	BOTT. OF SLAB, LONGIT.	——	52	6430	1312
a5	25	BOTT. OF SLAB, LONGIT.	——	26	7900	806
a6	25	BOTT. OF SLAB, LONGIT., AT RAIL	——	8	7880	247
a7	25	BOTT. OF SLAB, LONGIT., AT RAIL	——	4	7440	117
a8	25	BOTT. OF SLAB, LONGIT., AT RAIL	——	8	3840	121
a9	25	BOTT. OF SLAB, LONGIT., AT RAIL	——	4	3980	62
b1	25	TOP OF SLAB, LONGIT.	——	53	2400	499
b2	25	TOP OF SLAB, LONGIT.	——	53	5420	1127
b3	25	TOP OF SLAB, LONGIT.	——	53	3970	826
b4	25	TOP OF SLAB, LONGIT.	——	53	5510	1146
b5	25	TOP OF SLAB, LONGIT.	——	52	5740	1172
b6	25	TOP OF SLAB, LONGIT.	——	52	4660	951
b7	20	TOP OF SLAB, LONGIT.	——	26	5560	340
b8	25	TOP OF SLAB, LONGIT., AT RAIL	——	8	8340	262
b9	25	TOP OF SLAB, LONGIT., AT RAIL	——	8	11 255	353
c1	20	BOTT. OF SLAB, TRANSV., SIDE "A"	——			
c2	20	BOTT. OF SLAB, TRANSV., SIDE "B"	——			
d1	15	TOP OF SLAB, TRANSV., SIDE "A"	——			
d2	15	TOP OF SLAB, TRANSV., SIDE "B"	——			
e1	25	SLAB, TRANSV., AT ABUT., SIDE "A"		20		
e2	25	SLAB, TRANSV., AT ABUT., SIDE "B"		20		
e3	20	SLAB, HAIRPINS, AT ABUT.	⊓	92		
h1	15	PIER CAP HOOPS	⊔		2140	
h2	25	PIER CAP ENDS	⊂	4	4200	66
h3	25	PIER CAP, BOTT., LONGIT., SIDE "A"	——	8		
h4	25	PIER CAP, BOTT., LONGIT., SIDE "B"	——	8		
h5	25	PIER CAP, TOP, LONGIT., SIDE "A"	——	4		
h6	25	PIER CAP, TOP, LONGIT., SIDE "B"	——	4		
j1	15	TOP OF SLAB, TRANSV., AT RAIL	——		1760	
*m1-4	15	WING, VERTICAL	——	32	SHOWN	53
*n1	15	WING, HORIZONTAL	——	24	2040	77
p1	15	PAVING SUPPORT, TRANSV.	⊏		2700	
p3	15	PAVING SUPPORT, LONGIT., SIDE "A"	——	6		
p4	15	PAVING SUPPORT, LONGIT., SIDE "B"	——	6		
BARRIER RAIL - SEE DESIGN SHEET ???						
REINFORCING STEEL EPOXY COATED - TOTAL - (kg)						

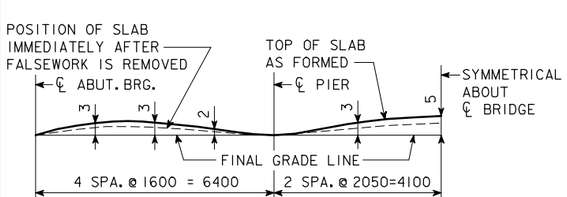

FORM CAMBER DIAGRAM

THIS DIAGRAM SHOWS THE FORM CAMBER REQUIRED TO COMPENSATE FOR THE ANTICIPATED ULTIMATE DEAD LOAD DEFLECTION. THE ABOVE DIMENSIONS DO NOT INCLUDE ANY ALLOWANCE FOR FORM DEFLECTION OR FALSEWORK SETTLEMENT.

BENT BAR DETAILS

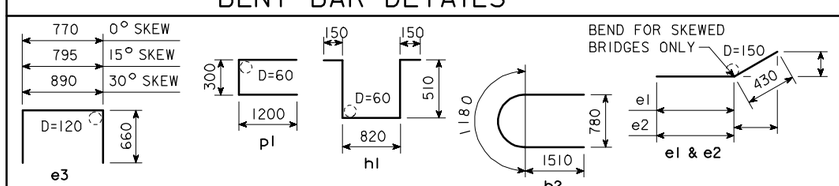

NOTE: ALL DIMENSIONS ARE OUT TO OUT. D=PIN DIAMETER.

ESTIMATED QUANT.-SUPERSTR.

ITEM		UNITS	QUANTITY
STRUCTURAL CONCRETE (BRIDGE)		m^3	
REINFORCING STEEL, EPOXY COATED		kg	
	FURNISH	m	
	DRIVE	m	

STRUCTURAL CONCRETE QUANTITY INCLUDES SLAB WITH INTEGRAL PIER CAPS AND WINGS. FOR TABULATION, SEE "CONCRETE PLACEMENT QUANTITIES-SUPERSTRUCTURE".

IOWA DEPARTMENT OF TRANSPORTATION - HIGHWAY DIVISION

DESIGN SHEET NO. ____ OF ____ FILE NO. _____ DESIGN NO. _____

REVISED 02-05 - PAVING NOTCH BENT BARS AND BAR LIST CHANGED.
HM4448.SOI: THIS SHEET ISSUED 9-1-95.

DESIGN TEAM	CONCRETE SLAB, SUPERSTRUCTURE DETAILS-12 000 mm ROADWAY-21 000 mm BRIDGE	STANDARD SHEET M4448	COUNTY	PROJECT NUMBER	SHEET NUMBER

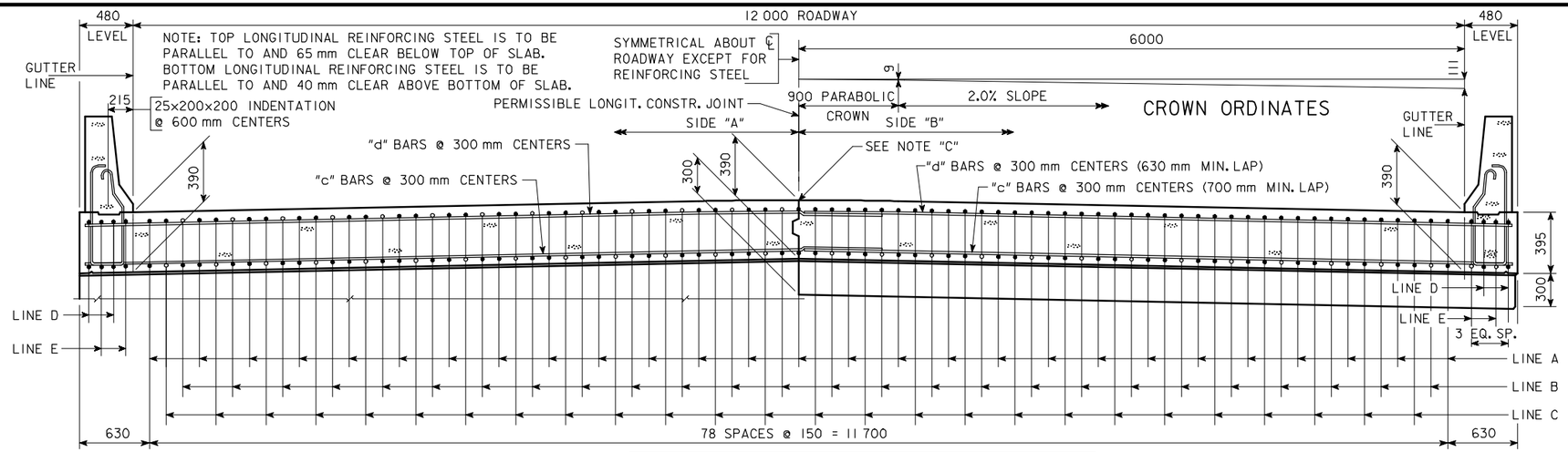

HALF SECTION NEAR ABUTMENT

NOTE "C": IF PERMISSIBLE LONGITUDINAL JOINT IS USED, BARS ON ℄ ROADWAY MAY BE SHIFTED TO CLEAR JOINT BY 25 mm.

SLAB CROSS-SECTIONAL AREA-SIDE "A" =	2.553 m^2
SLAB CROSS-SECTIONAL AREA-SIDE "B" =	2.553 m^2
BARRIER RAIL CROSS-SECTIONAL AREA-ONE RAIL =	0.263 m^2

HALF SECTION NEAR PIER

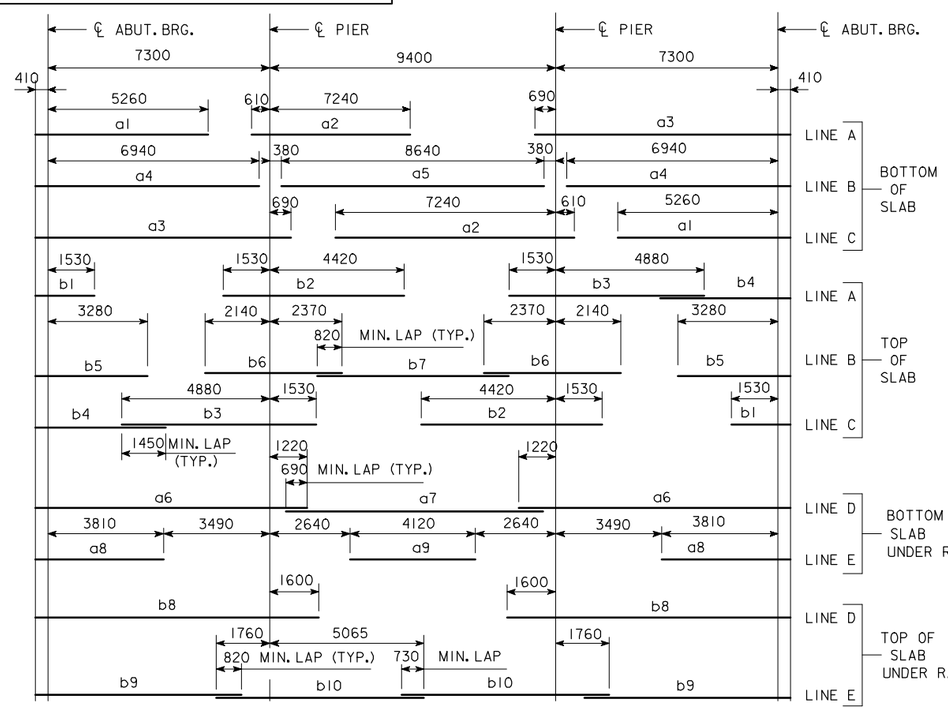

PLACEMENT FOR LONGITUDINAL REINFORCEMENT

* WING REINFORCING MAY BE UNCOATED

EPOXY COATED REINFORCING BAR LIST SUPERSTRUCTURE

MARK	SIZE	LOCATION	SHAPE	No.	LENGTH	MASS
a1	25	BOTT. OF SLAB, LONGIT.	——	53	5670	1180
a2	25	BOTT. OF SLAB, LONGIT.	——	53	7850	1633
a3	25	BOTT. OF SLAB, LONGIT.	——	53	8400	1747
a4	25	BOTT. OF SLAB, LONGIT.	——	52	7350	1500
a5	25	BOTT. OF SLAB, LONGIT.	——	26	8640	882
a6	25	BOTT. OF SLAB, LONGIT., AT RAIL	——	8	8930	280
a7	25	BOTT. OF SLAB, LONGIT., AT RAIL	——	4	8340	131
a8	25	BOTT. OF SLAB, LONGIT., AT RAIL	——	8	4220	133
a9	25	BOTT. OF SLAB, LONGIT., AT RAIL	——	4	4120	65
b1	20	TOP OF SLAB, LONGIT.	——	53	1940	242
b2	30	TOP OF SLAB, LONGIT.	——	53	5950	1733
b3	30	TOP OF SLAB, LONGIT.	——	53	6410	1867
b4	25	TOP OF SLAB, LONGIT.	——	53	4280	890
b5	25	TOP OF SLAB, LONGIT.	——	52	3690	753
b6	30	TOP OF SLAB, LONGIT.	——	52	4510	1289
b7	20	TOP OF SLAB, LONGIT.	——	26	6300	386
b8	25	TOP OF SLAB, LONGIT., AT RAIL	——	8	9310	292
b9	20	TOP OF SLAB, LONGIT., AT RAIL	——	8	6770	128
b10	25	TOP OF SLAB, LONGIT., AT RAIL	——	8	6825	214
c1	20	BOTT. OF SLAB, TRANSV., SIDE "A"	——			
c2	20	BOTT. OF SLAB, TRANSV., SIDE "B"	——			
d1	15	TOP OF SLAB, TRANSV., SIDE "A"	——			
d2	15	TOP OF SLAB, TRANSV., SIDE "B"	——			
e1	25	SLAB, TRANSV., AT ABUT., SIDE "A"		20		
e2	25	SLAB, TRANSV., AT ABUT., SIDE "B"		20		
e3	20	SLAB, HAIRPINS, AT ABUT.	⊓	92		
h1	15	PIER CAP HOOPS	⊔		2180	
h2	25	PIER CAP ENDS	⊂⊃	4	4200	66
h3	25	PIER CAP, BOTT., LONGIT., SIDE "A"	——	8		
h4	25	PIER CAP, BOTT., LONGIT., SIDE "B"	——	8		
h5	25	PIER CAP, TOP, LONGIT., SIDE "A"	——	4		
h6	25	PIER CAP, TOP, LONGIT., SIDE "B"	——	4		
j1	15	TOP OF SLAB, TRANSV., AT RAIL	——		1680	
* m1-4	15	WING, VERTICAL	——	32	SHOWN	53
* n1	15	WING, HORIZONTAL	——	24	2040	77
p1	15	PAVING SUPPORT, TRANSV.	⊏		2700	
p3	15	PAVING SUPPORT, LONGIT., SIDE "A"	——	6		
p4	15	PAVING SUPPORT, LONGIT., SIDE "B"	——	6		
BARRIER RAIL - SEE DESIGN SHEET ???						
REINFORCING STEEL EPOXY COATED - TOTAL - (kg)						

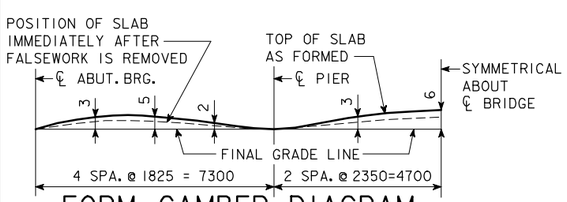

FORM CAMBER DIAGRAM

THIS DIAGRAM SHOWS THE FORM CAMBER REQUIRED TO COMPENSATE FOR THE ANTICIPATED ULTIMATE DEAD LOAD DEFLECTION. THE ABOVE DIMENSIONS DO NOT INCLUDE ANY ALLOWANCE FOR FORM DEFLECTION OR FALSEWORK SETTLEMENT.

BENT BAR DETAILS

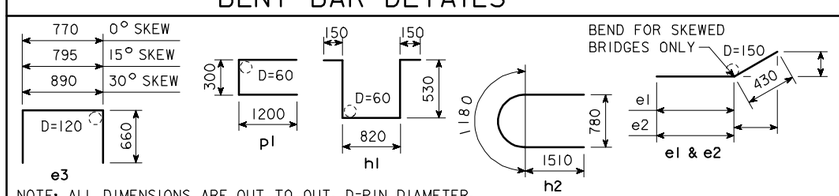

NOTE: ALL DIMENSIONS ARE OUT TO OUT. D=PIN DIAMETER.

ESTIMATED QUANT.-SUPERSTR.

ITEM		UNITS	QUANTITY
STRUCTURAL CONCRETE (BRIDGE)		m^3	
REINFORCING STEEL, EPOXY COATED		kg	
	FURNISH	m	
	DRIVE	m	

STRUCTURAL CONCRETE QUANTITY INCLUDES SLAB WITH INTEGRAL PIER CAPS AND WINGS. FOR TABULATION, SEE "CONCRETE PLACEMENT QUANTITIES-SUPERSTRUCTURE".

IOWA DEPARTMENT OF TRANSPORTATION - HIGHWAY DIVISION

DESIGN SHEET NO. ____ OF ____ FILE NO. _____ DESIGN NO. _____

REVISED 02-05 - PAVING NOTCH BENT BARS AND BAR LIST CHANGED.
HM4449.SO1: THIS SHEET ISSUED 9-1-95.

DESIGN TEAM	CONCRETE SLAB, SUPERSTRUCTURE DETAILS-12 000 mm ROADWAY-24 000 mm BRIDGE	STANDARD SHEET M4449	COUNTY	PROJECT NUMBER	SHEET NUMBER

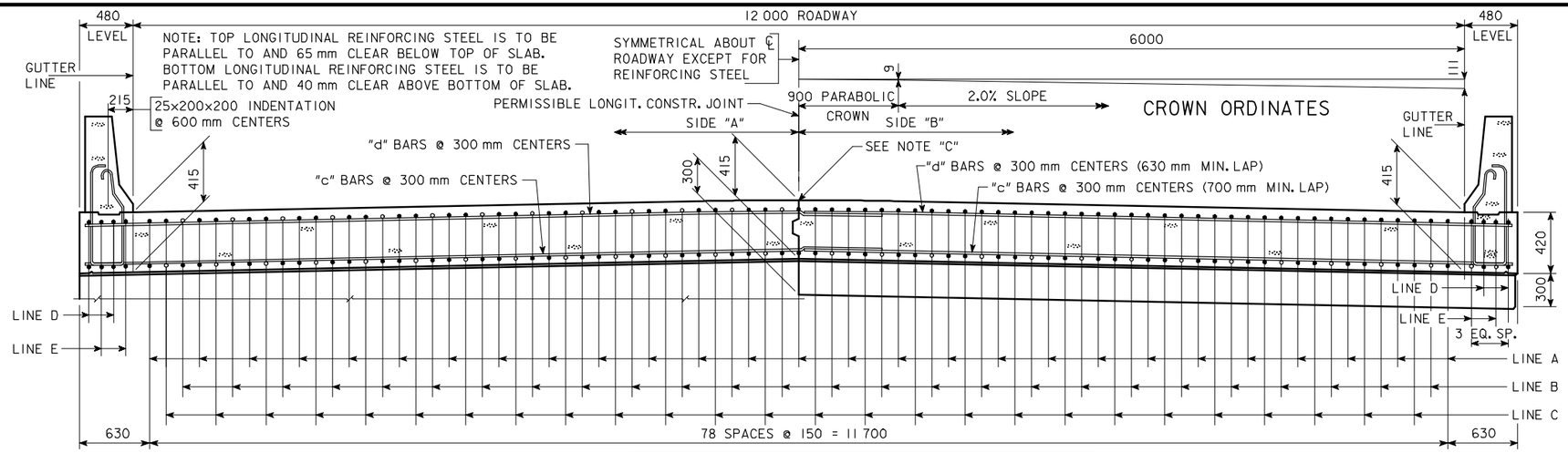

HALF SECTION NEAR ABUTMENT

NOTE "C": IF PERMISSIBLE LONGITUDINAL JOINT IS USED, BARS ON ℄ ROADWAY MAY BE SHIFTED TO CLEAR JOINT BY 25 mm.

SLAB CROSS-SECTIONAL AREA-SIDE "A" =	2.715 m^2
SLAB CROSS-SECTIONAL AREA-SIDE "B" =	2.715 m^2
BARRIER RAIL CROSS-SECTIONAL AREA-ONE RAIL =	.0263 m^2

HALF SECTION NEAR PIER

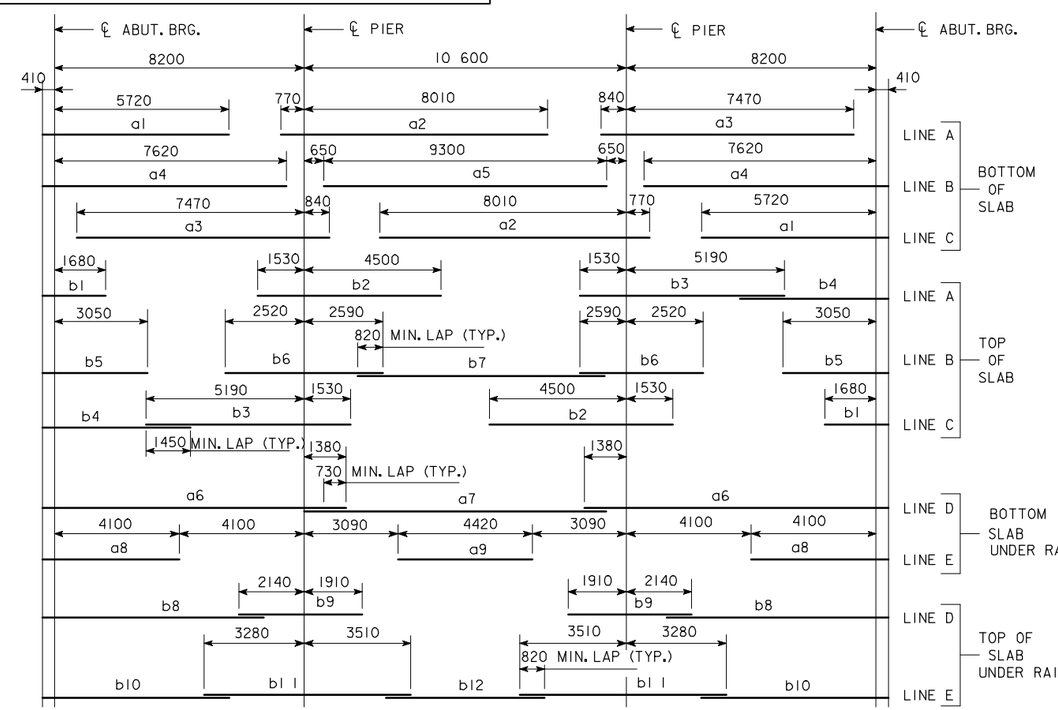

PLACEMENT FOR LONGITUDINAL REINFORCEMENT

* WING REINFORCING MAY BE UNCOATED

EPOXY COATED REINFORCING BAR LIST SUPERSTRUCTURE

MARK	SIZE	LOCATION	SHAPE	No.	LENGTH	MASS
a1	25	BOTT. OF SLAB, LONGIT.	—	53	6130	1275
a2	25	BOTT. OF SLAB, LONGIT.	—	53	8780	1826
a3	25	BOTT. OF SLAB, LONGIT.	—	53	8310	1729
a4	30	BOTT. OF SLAB, LONGIT.	—	52	8030	2294
a5	30	BOTT. OF SLAB, LONGIT.	—	26	9300	1329
a6	25	BOTT. OF SLAB, LONGIT., AT RAIL	—	8	9990	314
a7	25	BOTT. OF SLAB, LONGIT., AT RAIL	—	4	9300	146
a8	25	BOTT. OF SLAB, LONGIT., AT RAIL	—	8	4510	142
a9	25	BOTT. OF SLAB, LONGIT., AT RAIL	—	4	4420	69
b1	20	TOP OF SLAB, LONGIT.	—	53	2090	261
b2	30	TOP OF SLAB, LONGIT.	—	53	6030	1756
b3	30	TOP OF SLAB, LONGIT.	—	53	6720	1957
b4	25	TOP OF SLAB, LONGIT.	—	53	4870	1013
b5	20	TOP OF SLAB, LONGIT.	—	52	3460	424
b6	30	TOP OF SLAB, LONGIT.	—	52	5110	1460
b7	20	TOP OF SLAB, LONGIT.	—	26	7060	432
b8	20	TOP OF SLAB, LONGIT., AT RAIL	—	8	7290	137
b9	30	TOP OF SLAB, LONGIT., AT RAIL	—	8	4050	178
b10	20	TOP OF SLAB, LONGIT., AT RAIL	—	8	6150	116
b11	25	TOP OF SLAB, LONGIT., AT RAIL	—	8	6790	213
b12	20	TOP OF SLAB, LONGIT., AT RAIL	—	4	5220	49
c1	20	BOTT. OF SLAB, TRANSV., SIDE "A"	—			
c2	20	BOTT. OF SLAB, TRANSV., SIDE "B"	—			
d1	15	TOP OF SLAB, TRANSV., SIDE "A"	—			
d2	15	TOP OF SLAB, TRANSV., SIDE "B"	—			
e1	25	SLAB, TRANSV., AT ABUT., SIDE "A"		20		
e2	25	SLAB, TRANSV., AT ABUT., SIDE "B"		20		
e3	20	SLAB, HAIRPINS, AT ABUT.	⊓	92		
h1	15	PIER CAP HOOPS	⊔		2220	
h2	25	PIER CAP ENDS	⊂	4	4200	66
h3	25	PIER CAP, BOTT., LONGIT., SIDE "A"	—	8		
h4	25	PIER CAP, BOTT., LONGIT., SIDE "B"	—	8		
h5	25	PIER CAP, TOP, LONGIT., SIDE "A"	—	4		
h6	25	PIER CAP, TOP, LONGIT., SIDE "B"	—	4		
j1	15	TOP OF SLAB, TRANSV., AT RAIL	—		1450	
* m1-4	15	WING, VERTICAL	—	32	SHOWN	53
* n1	15	WING, HORIZONTAL	—	24	2040	77
p1	15	PAVING SUPPORT, TRANSV.	⊏		2700	
p3	15	PAVING SUPPORT, LONGIT., SIDE "A"	—	6		
p4	15	PAVING SUPPORT, LONGIT., SIDE "B"	—	6		
BARRIER RAIL - SEE DESIGN SHEET ???						
REINFORCING STEEL EPOXY COATED - TOTAL - (Kg)						

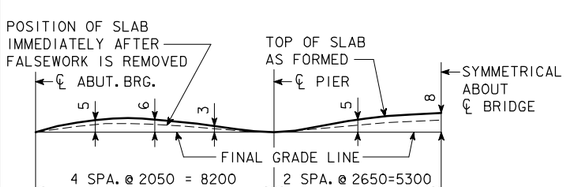

FORM CAMBER DIAGRAM

THIS DIAGRAM SHOWS THE FORM CAMBER REQUIRED TO COMPENSATE FOR THE ANTICIPATED ULTIMATE DEAD LOAD DEFLECTION. THE ABOVE DIMENSIONS DO NOT INCLUDE ANY ALLOWANCE FOR FORM DEFLECTION OR FALSEWORK SETTLEMENT.

BENT BAR DETAILS

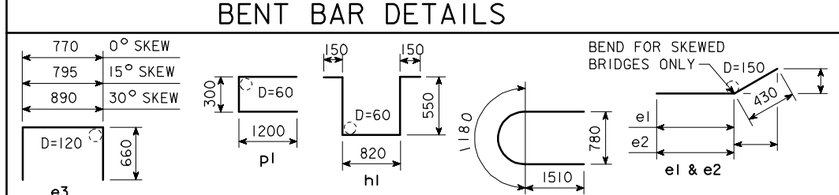

NOTE: ALL DIMENSIONS ARE OUT TO OUT. D=PIN DIAMETER.

ESTIMATED QUANT.-SUPERSTR.

ITEM		UNITS	QUANTITY
STRUCTURAL CONCRETE (BRIDGE)		m^3	
REINFORCING STEEL, EPOXY COATED		kg	
	FURNISH	m	
	DRIVE	m	

STRUCTURAL CONCRETE QUANTITY INCLUDES SLAB WITH INTEGRAL PIER CAPS AND WINGS. FOR TABULATION, SEE "CONCRETE PLACEMENT QUANTITIES-SUPERSTRUCTURE".

IOWA DEPARTMENT OF TRANSPORTATION - HIGHWAY DIVISION

DESIGN SHEET NO. ____ OF ____ FILE NO. _____ DESIGN NO. _____

REVISED 02-05 - PAVING NOTCH BENT BARS AND BAR LIST CHANGED.
HM4450.SOI: THIS SHEET ISSUED 9-1-95.

DESIGN TEAM	CONCRETE SLAB, SUPERSTRUCTURE DETAILS-12 000 mm ROADWAY-27 000 mm BRIDGE	STANDARD SHEET M4450	COUNTY	PROJECT NUMBER	SHEET NUMBER

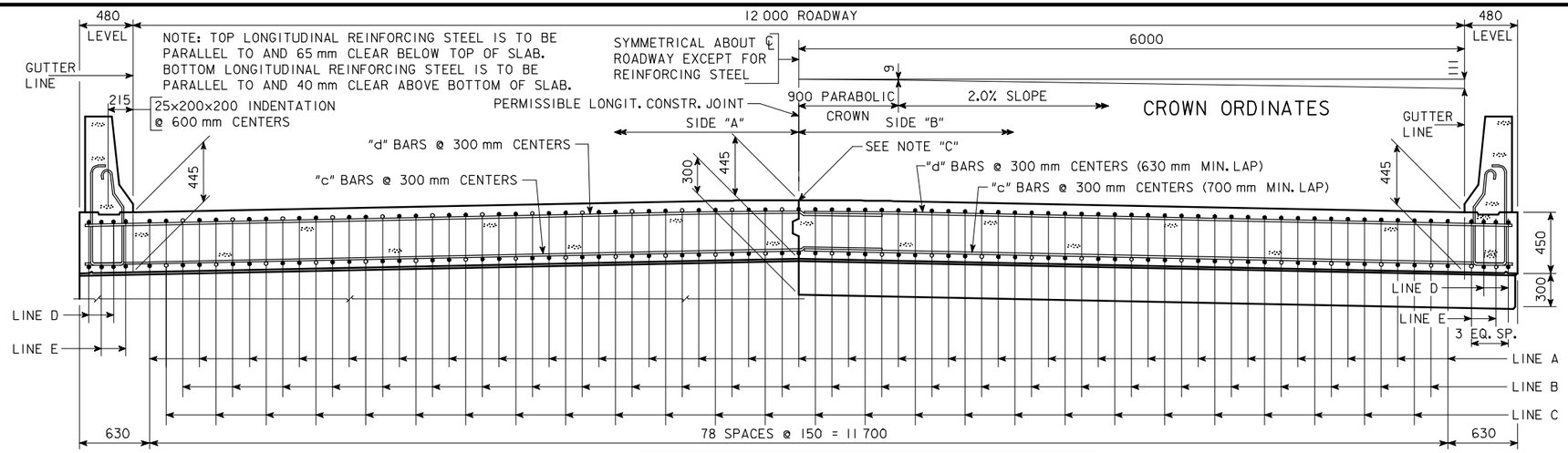

HALF SECTION NEAR ABUTMENT

NOTE "C": IF PERMISSIBLE LONGITUDINAL JOINT IS USED, BARS ON ℄ ROADWAY MAY BE SHIFTED TO CLEAR JOINT BY 25 mm.

SLAB CROSS-SECTIONAL AREA-SIDE "A" =	2.909	m^2
SLAB CROSS-SECTIONAL AREA-SIDE "B" =	2.909	m^2
BARRIER RAIL CROSS-SECTIONAL AREA-ONE RAIL =	.0263	m^2

HALF SECTION NEAR PIER

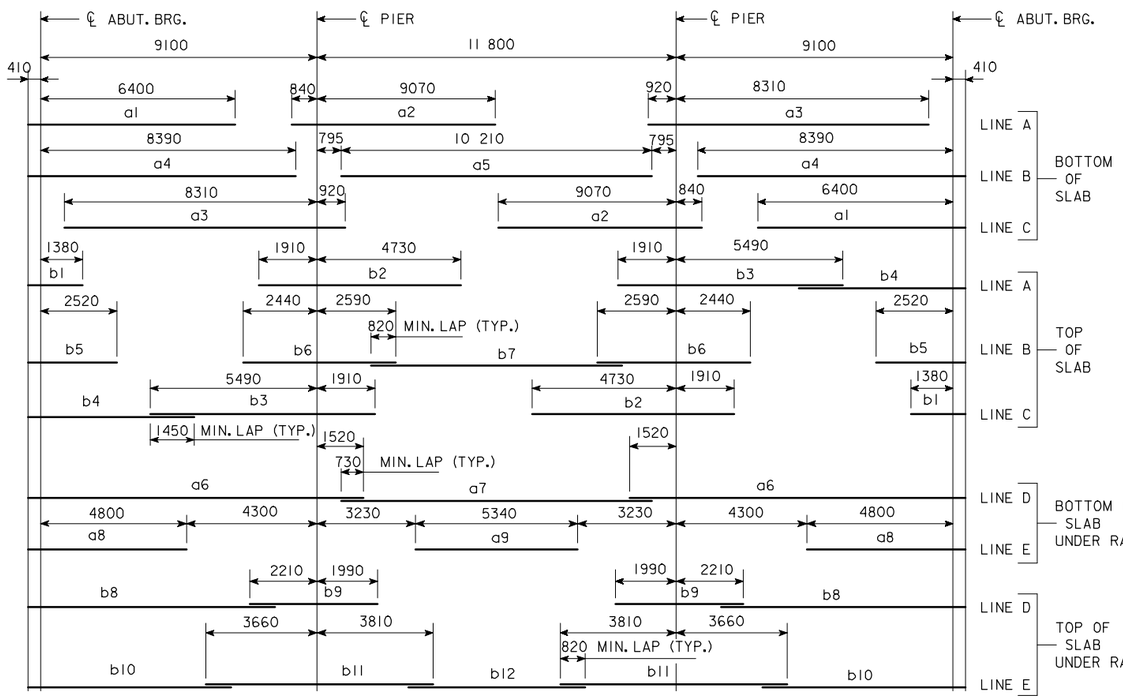

PLACEMENT FOR LONGITUDINAL REINFORCEMENT

* WING REINFORCING MAY BE UNCOATED

EPOXY COATED REINFORCING BAR LIST SUPERSTRUCTURE

MARK	SIZE	LOCATION	SHAPE	No.	LENGTH	MASS
a1	25	BOTT. OF SLAB, LONGIT.	——	53	6810	1417
a2	30	BOTT. OF SLAB, LONGIT.	——	53	9910	2886
a3	25	BOTT. OF SLAB, LONGIT.	——	53	9230	1920
a4	30	BOTT. OF SLAB, LONGIT.	——	52	8800	2515
a5	25	BOTT. OF SLAB, LONGIT.	——	26	10 210	1042
a6	25	BOTT. OF SLAB, LONGIT., AT RAIL	——	8	11 030	346
a7	25	BOTT. OF SLAB, LONGIT., AT RAIL	——	4	10 220	160
a8	25	BOTT. OF SLAB, LONGIT., AT RAIL	——	8	5210	164
a9	25	BOTT. OF SLAB, LONGIT., AT RAIL	——	4	5340	84
b1	20	TOP OF SLAB, LONGIT.	——	53	1790	223
b2	35	TOP OF SLAB, LONGIT.	——	53	6640	2763
b3	35	TOP OF SLAB, LONGIT.	——	53	7400	3079
b4	25	TOP OF SLAB, LONGIT.	——	53	5470	1138
b5	20	TOP OF SLAB, LONGIT.	——	52	2930	359
b6	30	TOP OF SLAB, LONGIT.	——	52	5030	1437
b7	20	TOP OF SLAB, LONGIT.	——	26	8260	506
b8	20	TOP OF SLAB, LONGIT., AT RAIL	——	8	8120	153
b9	30	TOP OF SLAB, LONGIT., AT RAIL	——	8	4200	185
b10	20	TOP OF SLAB, LONGIT., AT RAIL	——	8	6670	126
b11	30	TOP OF SLAB, LONGIT., AT RAIL	——	8	7470	328
b12	20	TOP OF SLAB, LONGIT., AT RAIL	——	4	5820	55
c1	20	BOTT. OF SLAB, TRANSV., SIDE "A"	——			
c2	20	BOTT. OF SLAB, TRANSV., SIDE "B"	——			
d1	15	TOP OF SLAB, TRANSV., SIDE "A"	——			
d2	15	TOP OF SLAB, TRANSV., SIDE "B"	——			
e1	25	SLAB, TRANSV., AT ABUT., SIDE "A"		20		
e2	25	SLAB, TRANSV., AT ABUT., SIDE "B"		20		
e3	20	SLAB, HAIRPINS, AT ABUT.	⊓	92		
h1	15	PIER CAP HOOPS	⊔		2280	
h2	25	PIER CAP ENDS	⊂⊃	4	4200	66
h3	25	PIER CAP, BOTT., LONGIT.,SIDE "A"	——	8		
h4	25	PIER CAP, BOTT., LONGIT.,SIDE "B"	——	8		
h5	25	PIER CAP, TOP, LONGIT.,SIDE "A"	——	4		
h6	25	PIER CAP, TOP, LONGIT.,SIDE "B"	——	4		
j1	15	TOP OF SLAB, TRANSV., AT RAIL	——		1380	
* m1-4	15	WING, VERTICAL	——	32	SHOWN	53
* n1	15	WING, HORIZONTAL	——	24	2040	77
p1	15	PAVING SUPPORT, TRANSV.	⊏		2700	
p3	15	PAVING SUPPORT, LONGIT., SIDE "A"	——	6		
p4	15	PAVING SUPPORT, LONGIT., SIDE "B"	——	6		
BARRIER RAIL - SEE DESIGN SHEET ???						
REINFORCING STEEL EPOXY COATED - TOTAL - (Kg)						

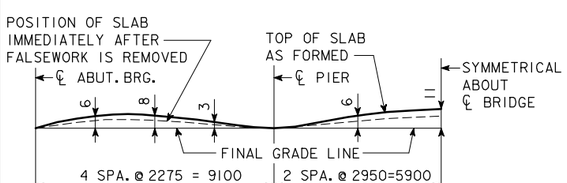

FORM CAMBER DIAGRAM

THIS DIAGRAM SHOWS THE FORM CAMBER REQUIRED TO COMPENSATE FOR THE ANTICIPATED ULTIMATE DEAD LOAD DEFLECTION. THE ABOVE DIMENSIONS DO NOT INCLUDE ANY ALLOWANCE FOR FORM DEFLECTION OR FALSEWORK SETTLEMENT.

BENT BAR DETAILS

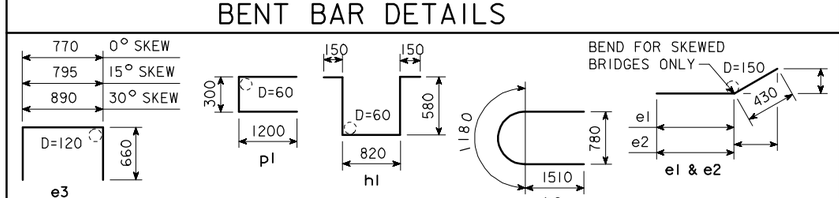

NOTE: ALL DIMENSIONS ARE OUT TO OUT. D=PIN DIAMETER.

ESTIMATED QUANT.-SUPERSTR.

ITEM		UNITS	QUANTITY
STRUCTURAL CONCRETE (BRIDGE)		m^3	
REINFORCING STEEL, EPOXY COATED		kg	
	FURNISH	m	
	DRIVE	m	

STRUCTURAL CONCRETE QUANTITY INCLUDES SLAB WITH INTEGRAL PIER CAPS AND WINGS. FOR TABULATION, SEE "CONCRETE PLACEMENT QUANTITIES-SUPERSTRUCTURE".

IOWA DEPARTMENT OF TRANSPORTATION - HIGHWAY DIVISION

DESIGN SHEET NO. ____ OF ____ FILE NO. _____ DESIGN NO. _____

REVISED 02-05 - PAVING NOTCH BENT BARS AND BAR LIST CHANGED.
HM445I.SOI: THIS SHEET ISSUED 9-1-95.

DESIGN TEAM	CONCRETE SLAB, SUPERSTRUCTURE DETAILS-12 000 mm ROADWAY-30 000 mm BRIDGE	STANDARD SHEET M445I	COUNTY	PROJECT NUMBER	SHEET NUMBER

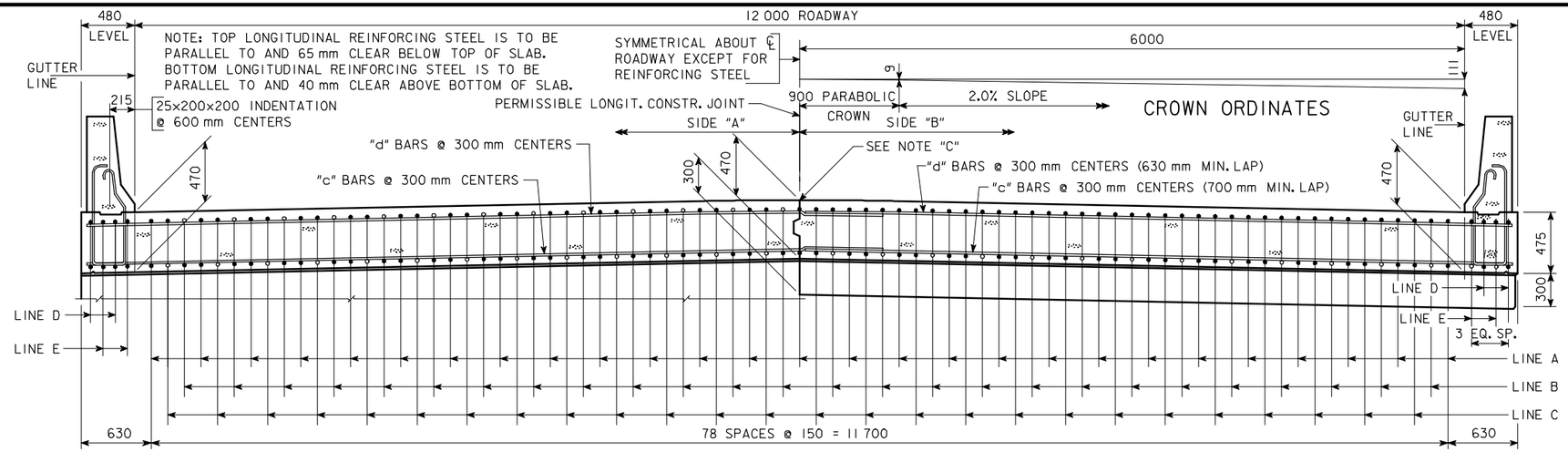

HALF SECTION NEAR ABUTMENT

NOTE "C": IF PERMISSIBLE LONGITUDINAL JOINT IS USED, BARS ON ℄ ROADWAY MAY BE SHIFTED TO CLEAR JOINT BY 25 mm.

SLAB CROSS-SECTIONAL AREA-SIDE "A" =	3.071	m^2
SLAB CROSS-SECTIONAL AREA-SIDE "B" =	3.071	m^2
BARRIER RAIL CROSS-SECTIONAL AREA-ONE RAIL =	0.263	m^2

HALF SECTION NEAR PIER

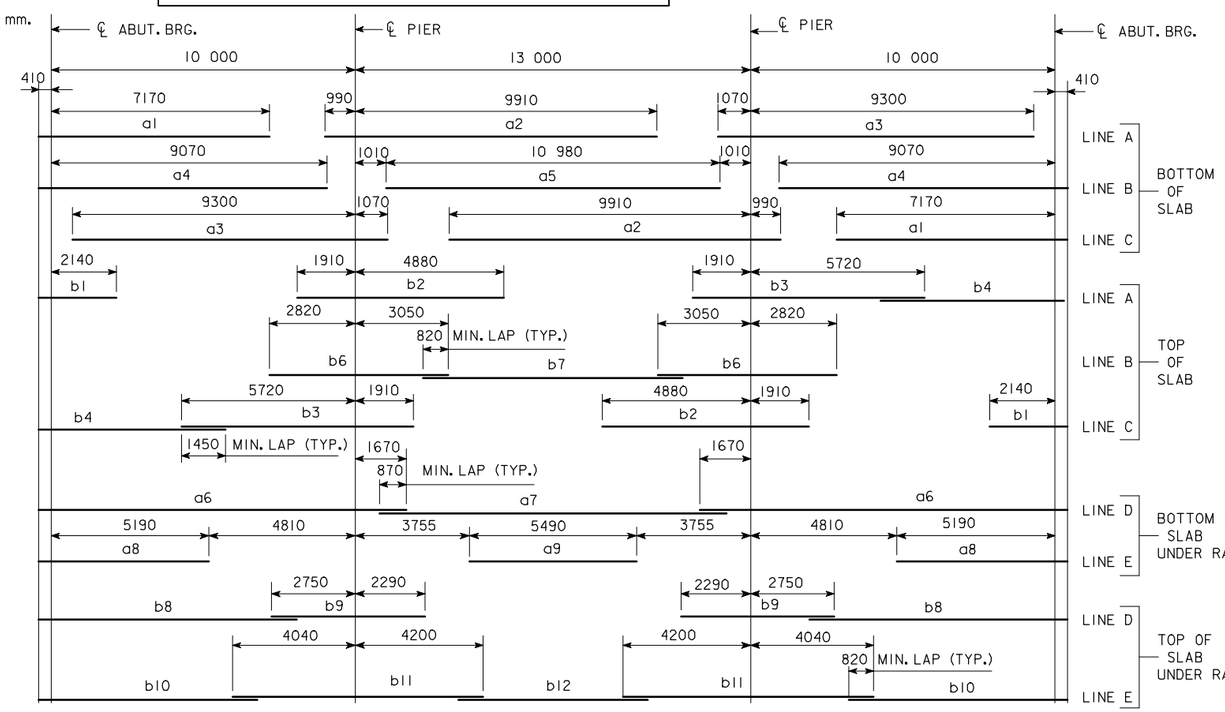

PLACEMENT FOR LONGITUDINAL REINFORCEMENT

* WING REINFORCING MAY BE UNCOATED

EPOXY COATED REINFORCING BAR LIST SUPERSTRUCTURE

MARK	SIZE	LOCATION	SHAPE	No.	LENGTH	MASS
a1	30	BOTT. OF SLAB, LONGIT.	——	53	7580	2208
a2	30	BOTT. OF SLAB, LONGIT.	——	53	10 900	3174
a3	30	BOTT. OF SLAB, LONGIT.	——	53	10 370	3020
a4	25	BOTT. OF SLAB, LONGIT.	——	52	9480	1935
a5	30	BOTT. OF SLAB, LONGIT.	——	26	10 980	1569
a6	30	BOTT. OF SLAB, LONGIT., AT RAIL	——	8	12 080	531
a7	30	BOTT. OF SLAB, LONGIT., AT RAIL	——	4	11 400	251
a8	25	BOTT. OF SLAB, LONGIT., AT RAIL	——	8	5600	176
a9	25	BOTT. OF SLAB, LONGIT., AT RAIL	——	4	5490	86
b1	25	TOP OF SLAB, LONGIT.	——	53	2550	530
b2	35	TOP OF SLAB, LONGIT.	——	53	6790	2825
b3	35	TOP OF SLAB, LONGIT.	——	53	7630	3174
b4	25	TOP OF SLAB, LONGIT.	——	53	6140	1277
b6	35	TOP OF SLAB, LONGIT.	——	52	5870	2396
b7	20	TOP OF SLAB, LONGIT.	——	26	8540	523
b8	20	TOP OF SLAB, LONGIT., AT RAIL	——	8	8480	160
b9	35	TOP OF SLAB, LONGIT., AT RAIL	——	8	5040	317
b10	20	TOP OF SLAB, LONGIT., AT RAIL	——	8	7190	135
b11	30	TOP OF SLAB, LONGIT., AT RAIL	——	8	8240	362
b12	20	TOP OF SLAB, LONGIT., AT RAIL	——	4	6240	59
c1	20	BOTT. OF SLAB, TRANSV., SIDE "A"	——			
c2	20	BOTT. OF SLAB, TRANSV., SIDE "B"	——			
d1	15	TOP OF SLAB, TRANSV., SIDE "A"	——			
d2	15	TOP OF SLAB, TRANSV., SIDE "B"	——			
e1	25	SLAB, TRANSV., AT ABUT., SIDE "A"		20		
e2	25	SLAB, TRANSV., AT ABUT., SIDE "B"		20		
e3	20	SLAB, HAIRPINS, AT ABUT.	⊓	92		
h1	15	PIER CAP HOOPS	⊔		2340	
h2	25	PIER CAP ENDS	⊂	4	4200	66
h3	25	PIER CAP, BOTT., LONGIT., SIDE "A"	——	8		
h4	25	PIER CAP, BOTT., LONGIT., SIDE "B"	——	8		
h5	25	PIER CAP, TOP, LONGIT., SIDE "A"	——	4		
h6	25	PIER CAP, TOP, LONGIT., SIDE "B"	——	4		
j1	15	TOP OF SLAB, TRANSV., AT RAIL	——		1220	
* m1-4	15	WING, VERTICAL	——	32	SHOWN	53
* n1	15	WING, HORIZONTAL	——	24	2040	77
p1	15	PAVING SUPPORT, TRANSV.	⊏		2700	
p3	15	PAVING SUPPORT, LONGIT., SIDE "A"	——	6		
p4	15	PAVING SUPPORT, LONGIT., SIDE "B"	——	6		
BARRIER RAIL - SEE DESIGN SHEET ???						
REINFORCING STEEL EPOXY COATED - TOTAL - (kg)						

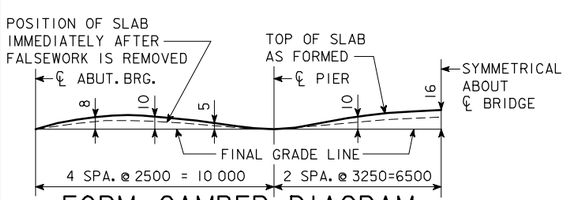

FORM CAMBER DIAGRAM

THIS DIAGRAM SHOWS THE FORM CAMBER REQUIRED TO COMPENSATE FOR THE ANTICIPATED ULTIMATE DEAD LOAD DEFLECTION. THE ABOVE DIMENSIONS DO NOT INCLUDE ANY ALLOWANCE FOR FORM DEFLECTION OR FALSEWORK SETTLEMENT.

BENT BAR DETAILS

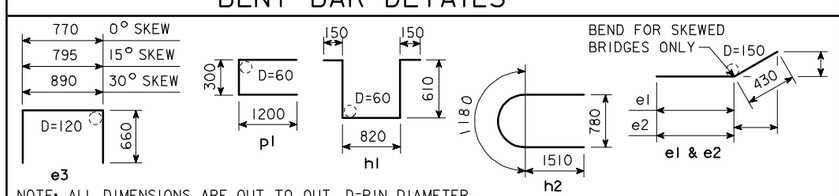

NOTE: ALL DIMENSIONS ARE OUT TO OUT. D=PIN DIAMETER.

ESTIMATED QUANT.-SUPERSTR.

ITEM		UNITS	QUANTITY
STRUCTURAL CONCRETE (BRIDGE)		m^3	
REINFORCING STEEL, EPOXY COATED		kg	
	FURNISH	m	
	DRIVE	m	

STRUCTURAL CONCRETE QUANTITY INCLUDES SLAB WITH INTEGRAL PIER CAPS AND WINGS. FOR TABULATION, SEE "CONCRETE PLACEMENT QUANTITIES-SUPERSTRUCTURE".

IOWA DEPARTMENT OF TRANSPORTATION - HIGHWAY DIVISION

DESIGN SHEET NO. ____ OF ____ FILE NO. _____ DESIGN NO. _____

REVISED 02-05 - PAVING NOTCH BENT BARS AND BAR LIST CHANGED.
HM4452.SO1: THIS SHEET ISSUED 9-1-95.

DESIGN TEAM	CONCRETE SLAB, SUPERSTRUCTURE DETAILS-12 000 mm ROADWAY-33 000 mm BRIDGE	STANDARD SHEET M4452	COUNTY	PROJECT NUMBER	SHEET NUMBER

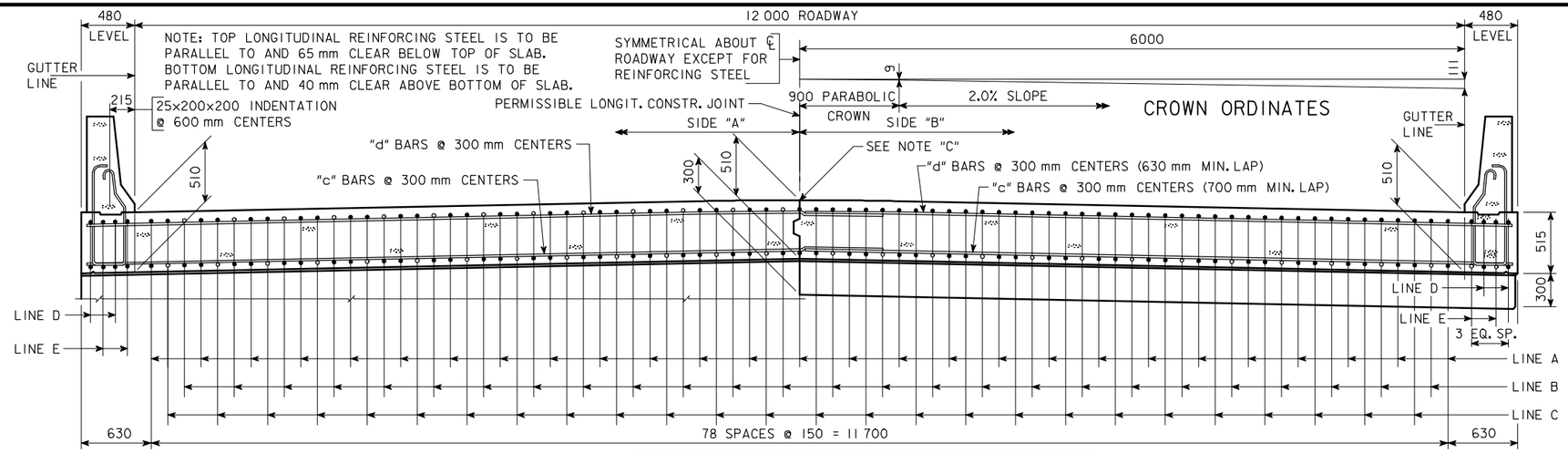

HALF SECTION NEAR ABUTMENT

NOTE "C": IF PERMISSIBLE LONGITUDINAL JOINT IS USED, BARS ON ℄ ROADWAY MAY BE SHIFTED TO CLEAR JOINT BY 25 mm.

SLAB CROSS-SECTIONAL AREA-SIDE "A" =	3.330 m^2
SLAB CROSS-SECTIONAL AREA-SIDE "B" =	3.330 m^2
BARRIER RAIL CROSS-SECTIONAL AREA-ONE RAIL =	0.263 m^2

HALF SECTION NEAR PIER

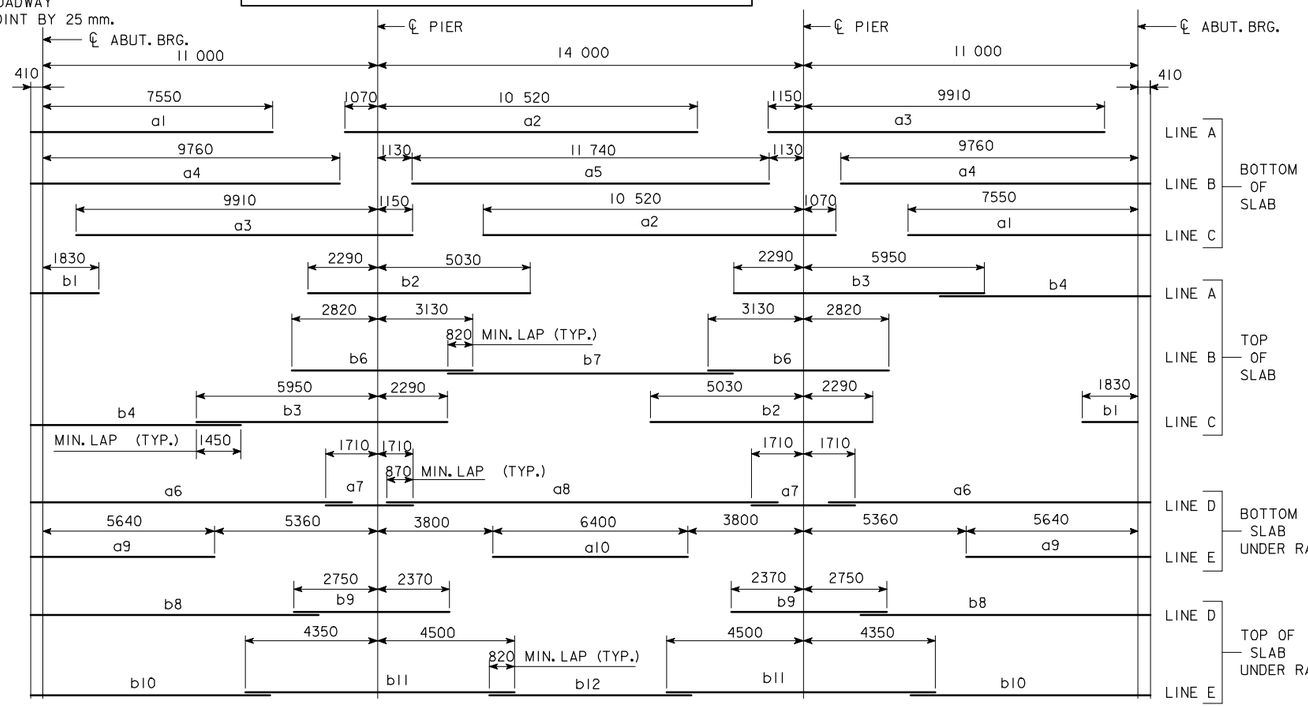

PLACEMENT FOR LONGITUDINAL REINFORCEMENT

EPOXY COATED REINFORCING BAR LIST SUPERSTRUCTURE

MARK	SIZE	LOCATION	SHAPE	No.	LENGTH	MASS
a1	30	BOTT. OF SLAB, LONGIT.	——	53	7960	2318
a2	30	BOTT. OF SLAB, LONGIT.	——	53	11 590	3375
a3	30	BOTT. OF SLAB, LONGIT.	——	53	11 060	3221
a4	30	BOTT. OF SLAB, LONGIT.	——	52	10 170	2906
a5	35	BOTT. OF SLAB, LONGIT.	——	26	11 740	2396
a6	30	BOTT. OF SLAB, LONGIT., AT RAIL	——	8	10 570	465
a7	30	BOTT. OF SLAB, LONGIT., AT RAIL	——	8	3420	150
a8	30	BOTT. OF SLAB, LONGIT., AT RAIL	——	4	12 320	271
a9	25	BOTT. OF SLAB, LONGIT., AT RAIL	——	8	6050	190
a10	25	BOTT. OF SLAB, LONGIT., AT RAIL	——	4	6400	100
b1	20	TOP OF SLAB, LONGIT.	——	53	2240	280
b2	35	TOP OF SLAB, LONGIT.	——	53	7320	3045
b3	35	TOP OF SLAB, LONGIT.	——	53	8240	3428
b4	25	TOP OF SLAB, LONGIT.	——	53	6910	1437
b6	35	TOP OF SLAB, LONGIT.	——	52	5950	2429
b7	20	TOP OF SLAB, LONGIT.	——	26	9380	574
b8	20	TOP OF SLAB, LONGIT., AT RAIL	——	8	9480	179
b9	35	TOP OF SLAB, LONGIT., AT RAIL	——	8	5120	322
b10	20	TOP OF SLAB, LONGIT., AT RAIL	——	8	7880	148
b11	35	TOP OF SLAB, LONGIT., AT RAIL	——	8	8850	556
b12	20	TOP OF SLAB, LONGIT., AT RAIL	——	4	6640	63
c1	20	BOTT. OF SLAB, TRANSV., SIDE "A"	——			
c2	20	BOTT. OF SLAB, TRANSV., SIDE "B"	——			
d1	15	TOP OF SLAB, TRANSV., SIDE "A"	——			
d2	15	TOP OF SLAB, TRANSV., SIDE "B"	——			
e1	25	SLAB, TRANSV., AT ABUT., SIDE "A"		20		
e2	25	SLAB, TRANSV., AT ABUT., SIDE "B"		20		
e3	20	SLAB, HAIRPINS, AT ABUT.		92		
h1	15	PIER CAP HOOPS			2420	
h2	25	PIER CAP ENDS		4	4200	66
h3	25	PIER CAP, BOTT., LONGIT., SIDE "A"	——	8		
h4	25	PIER CAP, BOTT., LONGIT., SIDE "B"	——	8		
h5	25	PIER CAP, TOP, LONGIT., SIDE "A"	——	4		
h6	25	PIER CAP, TOP, LONGIT., SIDE "B"	——	4		
j1	15	TOP OF SLAB, TRANSV., AT RAIL	——		1150	
* m1-4	15	WING, VERTICAL	——	32	SHOWN	53
* n1	15	WING, HORIZONTAL	——	24	2040	77
p1	15	PAVING SUPPORT, TRANSV.			2700	
p3	15	PAVING SUPPORT, LONGIT., SIDE "A"	——	6		
p4	15	PAVING SUPPORT, LONGIT., SIDE "B"	——	6		
BARRIER RAIL - SEE DESIGN SHEET ???						
REINFORCING STEEL EPOXY COATED - TOTAL - (kg)						

* WING REINFORCING MAY BE UNCOATED

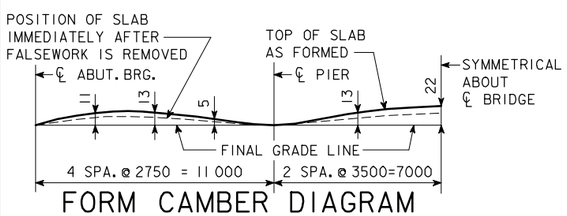

FORM CAMBER DIAGRAM

THIS DIAGRAM SHOWS THE FORM CAMBER REQUIRED TO COMPENSATE FOR THE ANTICIPATED ULTIMATE DEAD LOAD DEFLECTION. THE ABOVE DIMENSIONS DO NOT INCLUDE ANY ALLOWANCE FOR FORM DEFLECTION OR FALSEWORK SETTLEMENT.

BENT BAR DETAILS

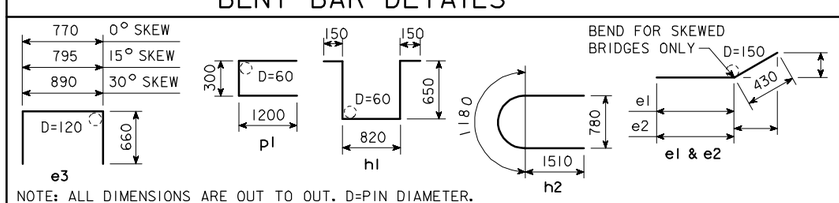

NOTE: ALL DIMENSIONS ARE OUT TO OUT. D=PIN DIAMETER.

ESTIMATED QUANT.-SUPERSTR.

ITEM		UNITS	QUANTITY
STRUCTURAL CONCRETE (BRIDGE)		m^3	
REINFORCING STEEL, EPOXY COATED		kg	
	FURNISH	m	
	DRIVE	m	

STRUCTURAL CONCRETE QUANTITY INCLUDES SLAB WITH INTEGRAL PIER CAPS AND WINGS. FOR TABULATION, SEE "CONCRETE PLACEMENT QUANTITIES-SUPERSTRUCTURE".

IOWA DEPARTMENT OF TRANSPORTATION - HIGHWAY DIVISION

DESIGN SHEET NO. ____ OF ____ FILE NO. _____ DESIGN NO. _____

REVISED 02-05 - PAVING NOTCH BENT BARS AND BAR LIST CHANGED.
HM4453.SOI: THIS SHEET ISSUED 9-1-95.

DESIGN TEAM	CONCRETE SLAB, SUPERSTRUCTURE DETAILS-12 000 mm ROADWAY-36 000 mm BRIDGE	STANDARD SHEET M4453	COUNTY	PROJECT NUMBER	SHEET NUMBER

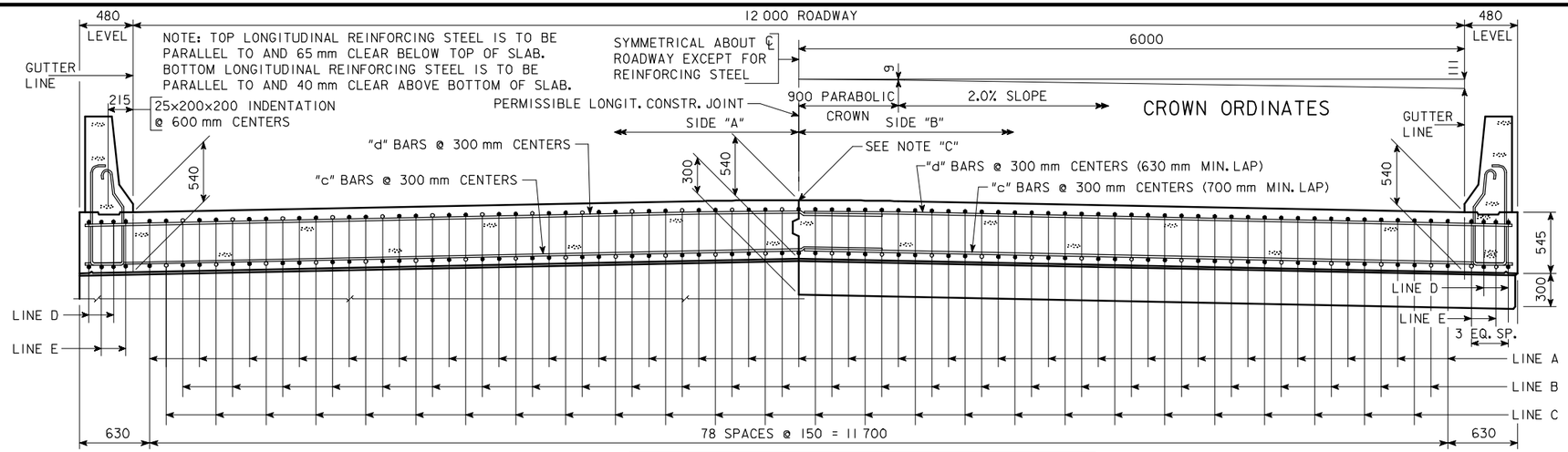

HALF SECTION NEAR ABUTMENT

NOTE "C": IF PERMISSIBLE LONGITUDINAL JOINT IS USED, BARS ON ℄ ROADWAY MAY BE SHIFTED TO CLEAR JOINT BY 25 mm.

SLAB CROSS-SECTIONAL AREA-SIDE "A" =	3.525	m^2
SLAB CROSS-SECTIONAL AREA-SIDE "B" =	3.525	m^2
BARRIER RAIL CROSS-SECTIONAL AREA-ONE RAIL =	0.263	m^2

HALF SECTION NEAR PIER

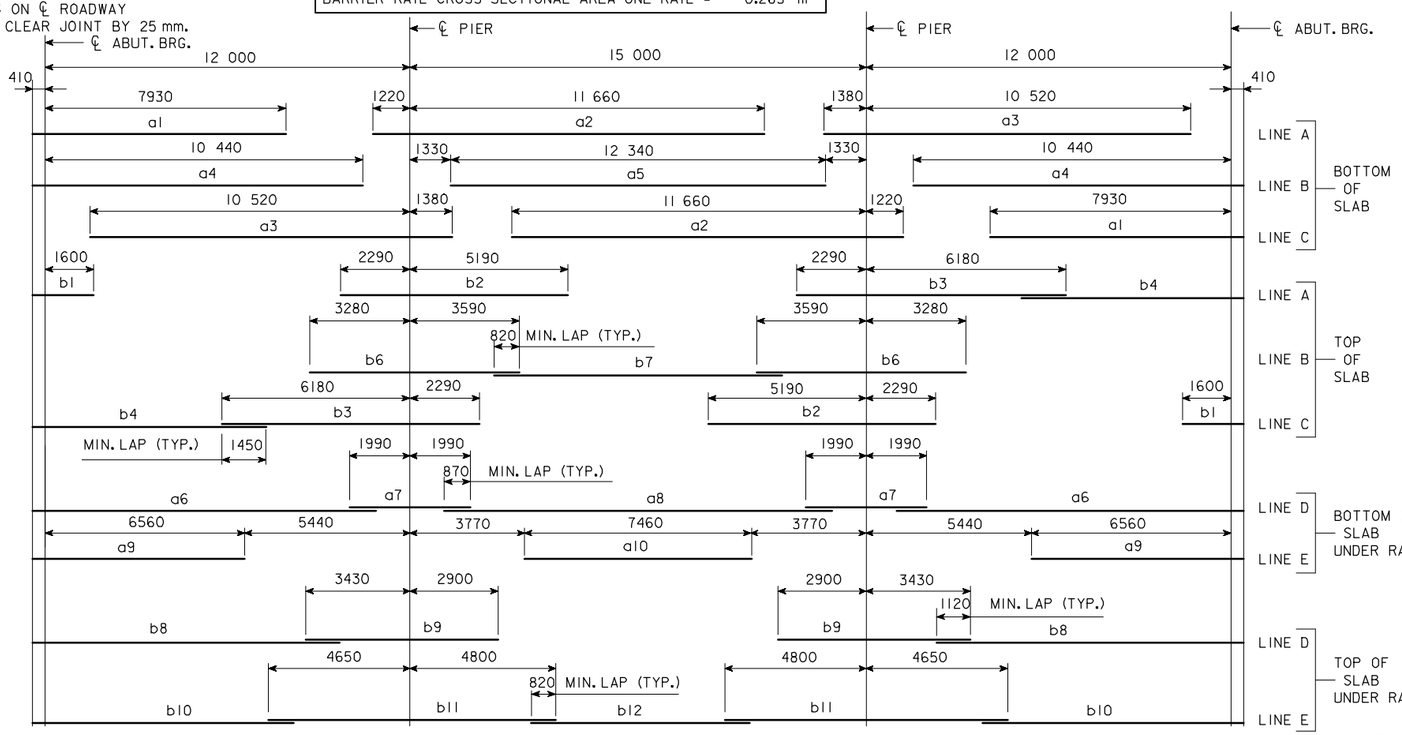

PLACEMENT FOR LONGITUDINAL REINFORCEMENT

* WING REINFORCING MAY BE UNCOATED

EPOXY COATED REINFORCING BAR LIST SUPERSTRUCTURE

MARK	SIZE	LOCATION	SHAPE	No.	LENGTH	MASS
a1	30	BOTT. OF SLAB, LONGIT.	—	53	8340	2429
a2	35	BOTT. OF SLAB, LONGIT.	—	53	12 880	5359
a3	30	BOTT. OF SLAB, LONGIT.	—	53	11 900	3466
a4	35	BOTT. OF SLAB, LONGIT.	—	52	10 850	4429
a5	30	BOTT. OF SLAB, LONGIT.	—	26	12 340	1763
a6	30	BOTT. OF SLAB, LONGIT., AT RAIL	—	8	11 290	496
a7	30	BOTT. OF SLAB, LONGIT., AT RAIL	—	8	3980	175
a8	30	BOTT. OF SLAB, LONGIT., AT RAIL	—	4	12 760	280
a9	30	BOTT. OF SLAB, LONGIT., AT RAIL	—	8	6970	306
a10	30	BOTT. OF SLAB, LONGIT., AT RAIL	—	4	7460	164
b1	20	TOP OF SLAB, LONGIT.	—	53	2010	251
b2	35	TOP OF SLAB, LONGIT.	—	53	7480	3112
b3	35	TOP OF SLAB, LONGIT.	—	53	8470	3524
b4	25	TOP OF SLAB, LONGIT.	—	53	7680	1598
b6	35	TOP OF SLAB, LONGIT.	—	52	6870	2804
b7	20	TOP OF SLAB, LONGIT.	—	26	9460	579
b8	25	TOP OF SLAB, LONGIT., AT RAIL	—	8	10 100	317
b9	35	TOP OF SLAB, LONGIT., AT RAIL	—	8	6330	398
b10	20	TOP OF SLAB, LONGIT., AT RAIL	—	8	8580	162
b11	35	TOP OF SLAB, LONGIT., AT RAIL	—	8	9450	593
b12	20	TOP OF SLAB, LONGIT., AT RAIL	—	4	7040	66
c1	20	BOTT. OF SLAB, TRANSV., SIDE "A"	—			
c2	20	BOTT. OF SLAB, TRANSV., SIDE "B"	—			
d1	15	TOP OF SLAB, TRANSV., SIDE "A"	—			
d2	15	TOP OF SLAB, TRANSV., SIDE "B"	—			
e1	25	SLAB, TRANSV., AT ABUT., SIDE "A"		20		
e2	25	SLAB, TRANSV., AT ABUT., SIDE "B"		20		
e3	20	SLAB, HAIRPINS, AT ABUT.	⊓	92		
h1	15	PIER CAP HOOPS	⊔		2480	
h2	25	PIER CAP ENDS	⊂	4	4200	66
h3	25	PIER CAP, BOTT., LONGIT.,SIDE "A"	—	8		
h4	25	PIER CAP, BOTT., LONGIT.,SIDE "B"	—	8		
h5	25	PIER CAP, TOP, LONGIT.,SIDE "A"	—	4		
h6	25	PIER CAP, TOP, LONGIT.,SIDE "B"	—	4		
j1	15	TOP OF SLAB, TRANSV., AT RAIL	—		1070	
* m1-4	15	WING, VERTICAL	—	32	SHOWN	53
* n1	15	WING, HORIZONTAL	—	24	2040	77
p1	15	PAVING SUPPORT, TRANSV.	⊏		2700	
p3	15	PAVING SUPPORT, LONGIT., SIDE "A"	—	6		
p4	15	PAVING SUPPORT, LONGIT., SIDE "B"	—	6		
BARRIER RAIL - SEE DESIGN SHEET ???						
REINFORCING STEEL EPOXY COATED - TOTAL - (kg)						

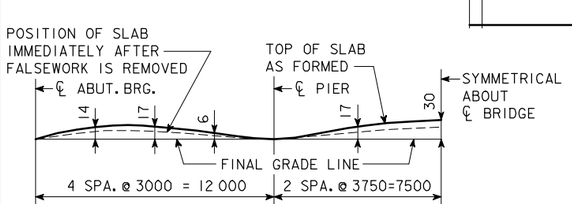

FORM CAMBER DIAGRAM

THIS DIAGRAM SHOWS THE FORM CAMBER REQUIRED TO COMPENSATE FOR THE ANTICIPATED ULTIMATE DEAD LOAD DEFLECTION. THE ABOVE DIMENSIONS DO NOT INCLUDE ANY ALLOWANCE FOR FORM DEFLECTION OR FALSEWORK SETTLEMENT.

BENT BAR DETAILS

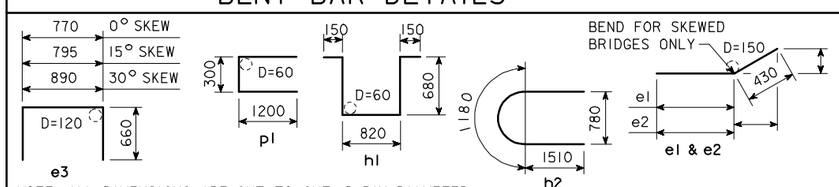

NOTE: ALL DIMENSIONS ARE OUT TO OUT. D=PIN DIAMETER.

ESTIMATED QUANT.-SUPERSTR.

ITEM		UNITS	QUANTITY
STRUCTURAL CONCRETE (BRIDGE)		m^3	
REINFORCING STEEL, EPOXY COATED		kg	
	FURNISH	m	
	DRIVE	m	

STRUCTURAL CONCRETE QUANTITY INCLUDES SLAB WITH INTEGRAL PIER CAPS AND WINGS. FOR TABULATION, SEE "CONCRETE PLACEMENT QUANTITIES-SUPERSTRUCTURE".

IOWA DEPARTMENT OF TRANSPORTATION - HIGHWAY DIVISION

DESIGN SHEET NO. ____ OF ____ FILE NO. _____ DESIGN NO. _____

REVISED 02-05 - PAVING NOTCH BENT BARS AND BAR LIST CHANGED.
HM4454.SOI: THIS SHEET ISSUED 9-1-95.

DESIGN TEAM	CONCRETE SLAB, SUPERSTRUCTURE DETAILS-12 000 mm ROADWAY-39 000 mm BRIDGE	STANDARD SHEET M4454	COUNTY	PROJECT NUMBER	SHEET NUMBER

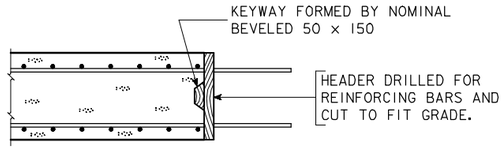

LONGITUDINAL CONSTR. JOINT

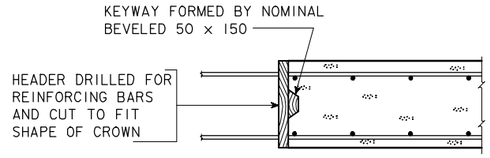

TRANSVERSE CONSTR. JOINT

BRIDGE LENGTH	LENGTH OF DRAIN	MASS kg/DRAIN
21 000	420	12
24 000	440	13
27 000	465	14
30 000	495	15
33 000	520	15
36 000	560	16
39 000	590	17

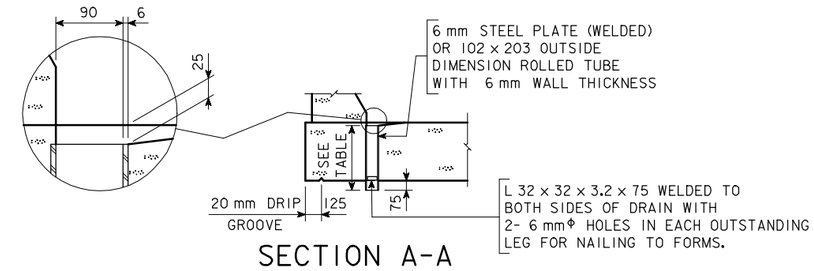

SECTION A-A

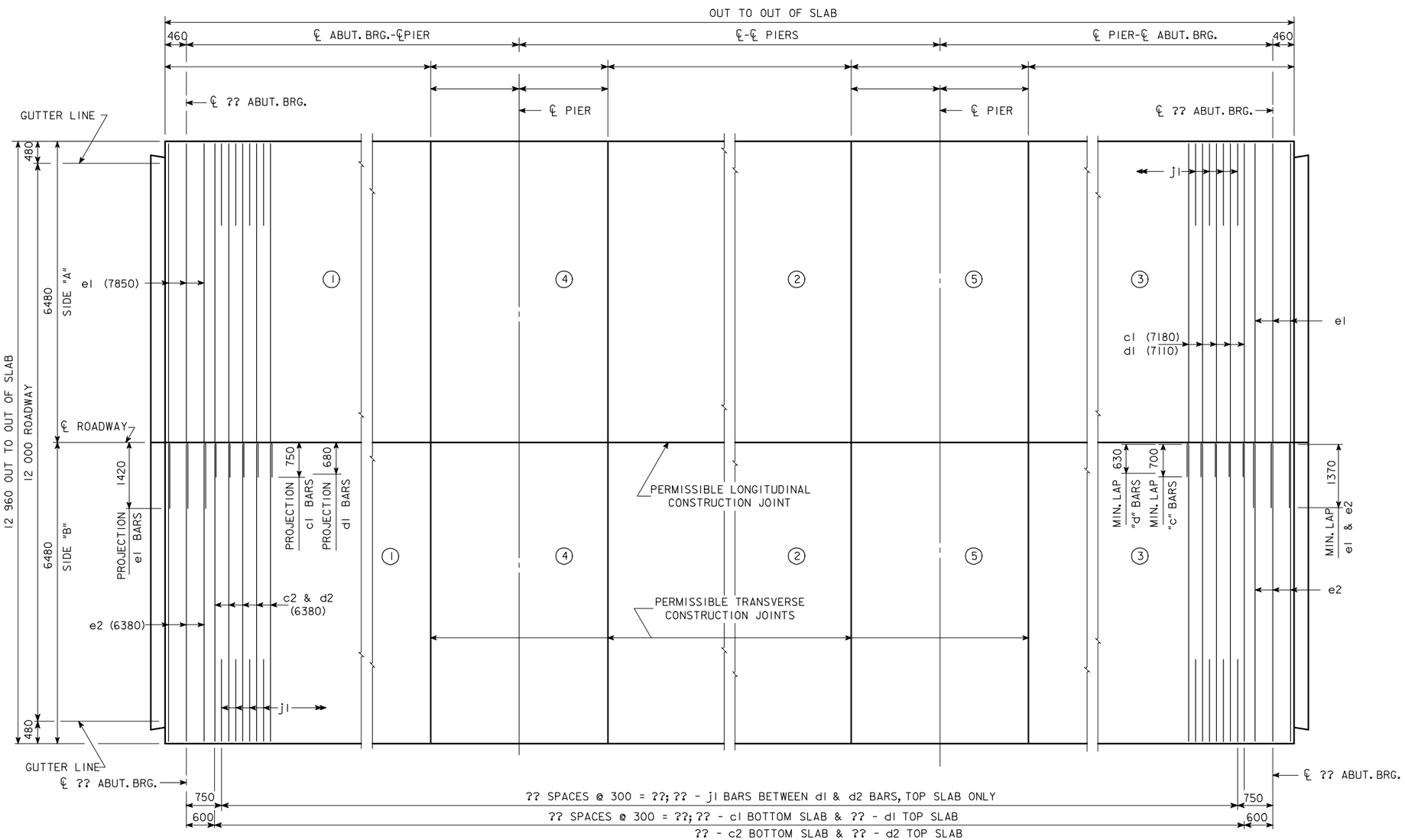

TRANSVERSE REINFORCING STEEL LAYOUT & CONCRETE PLACEMENT DIAGRAM

NOTE: ENCIRCLED NUMBERS DO NOT INDICATE SEQUENCE OF CONCRETE PLACEMENT. (SEE SUPERSTRUCTURE NOTES)

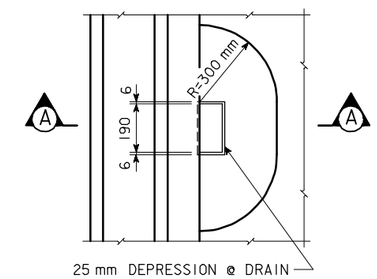

PART PLAN

DRAIN DETAILS

NOTE: DRAINS ARE TO BE GALVANIZED. ?? DRAINS REQUIRED, SEE "SITUATION PLAN" FOR LOCATION. MASS IS BASED ON WELDED PLATE. COST OF DRAINS TO BE INCLUDED IN PRICE BID FOR CONCRETE.

CONCRETE PLACEMENT QUANT.-SUPERSTR.

LOCATION	SIDE "A"	SIDE "B"	TOTAL
SLAB SECTION 1			
SLAB SECTION 2			
SLAB SECTION 3			
SLAB SECTION 4			
SLAB SECTION 5			
WINGS	4 @ 0.50 m^3		2.0
		TOTAL - m^3	

IOWA DEPARTMENT OF TRANSPORTATION - HIGHWAY DIVISION

DESIGN SHEET NO. ____ OF ____ FILE NO. _____ DESIGN NO. _____

REVISED 07-05 - PAVING NOTCH EXTENDED TO INTERCEPT THE WINGS.
HM455.SOI: THIS SHEET ISSUED 9-1-95.

DESIGN TEAM	CONCRETE SLAB, PLACEMENT DIAGRAM - 12 000 mm ROADWAY - 0° SKEW	STANDARD SHEET M4455	COUNTY	PROJECT NUMBER	SHEET NUMBER

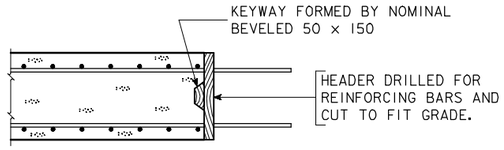

LONGITUDINAL CONSTR. JOINT

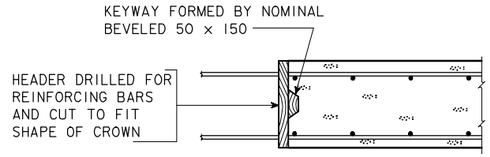

TRANSVERSE CONSTR. JOINT

BRIDGE LENGTH	LENGTH OF DRAIN	MASS kg/DRAIN
21 000	420	12
24 000	440	13
27 000	465	14
30 000	495	15
33 000	520	15
36 000	560	16
39 000	590	17

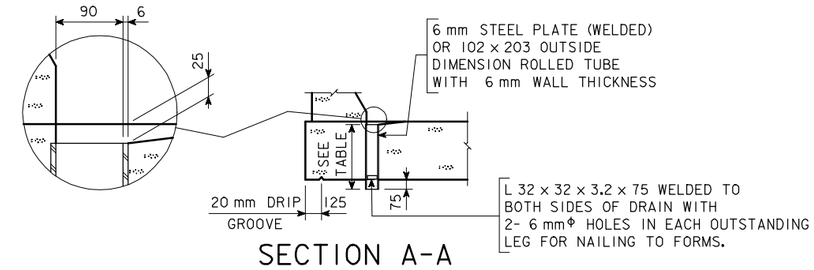

SECTION A-A

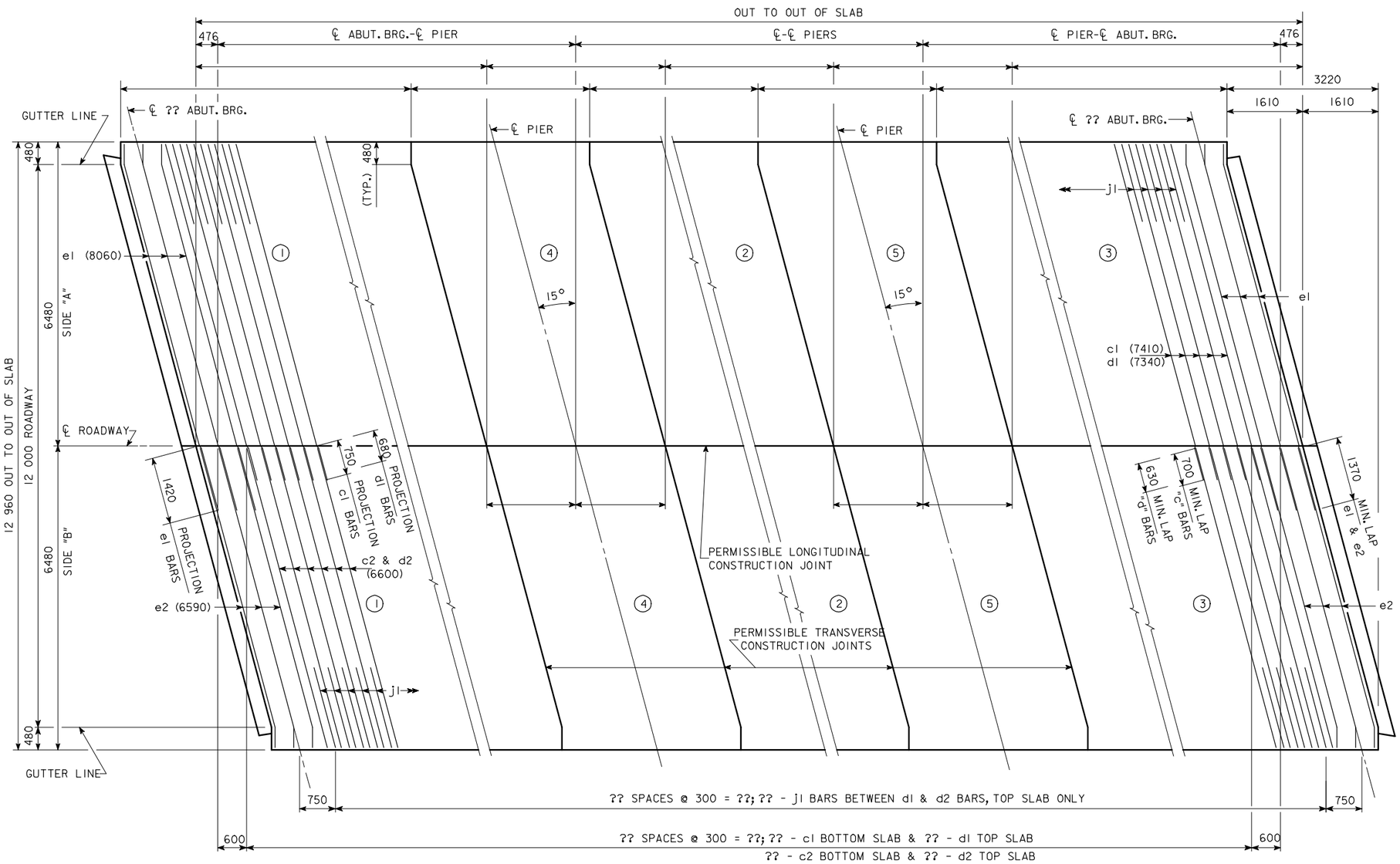

TRANSVERSE REINFORCING STEEL LAYOUT & CONCRETE PLACEMENT DIAGRAM

NOTE: ENCIRCLED NUMBERS DO NOT INDICATE SEQUENCE OF CONCRETE PLACEMENT. (SEE SUPERSTRUCTURE NOTES)

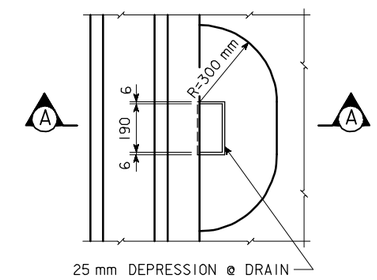

PART PLAN

DRAIN DETAILS

NOTE: DRAINS ARE TO BE GALVANIZED. ?? DRAINS REQUIRED, SEE "SITUATION PLAN" FOR LOCATION. MASS IS BASED ON WELDED PLATE. COST OF DRAINS TO BE INCLUDED IN PRICE BID FOR CONCRETE.

CONCRETE PLACEMENT QUANT.-SUPERSTR.

LOCATION	SIDE "A"	SIDE "B"	TOTAL
SLAB SECTION 1			
SLAB SECTION 2			
SLAB SECTION 3			
SLAB SECTION 4			
SLAB SECTION 5			
WINGS	4 @ 0.50 m^3		2.0
		TOTAL - m^3	

IOWA DEPARTMENT OF TRANSPORTATION - HIGHWAY DIVISION

DESIGN SHEET NO. ____ OF ____ FILE NO. _____ DESIGN NO. _____

REVISED 07-05 - PAVING NOTCH EXTENDED TO INTERCEPT THE WINGS.
HM4456.SOI: THIS SHEET ISSUED 9-1-95.

DESIGN TEAM	CONCRETE SLAB, PLACEMENT DIAGRAM - 12 000 mm ROADWAY - 15° SKEW R. A.	STANDARD SHEET M4456	COUNTY	PROJECT NUMBER	SHEET NUMBER

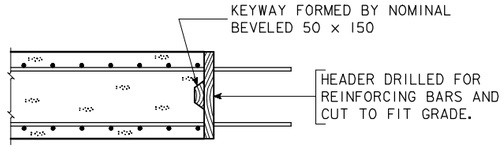

LONGITUDINAL CONSTR. JOINT

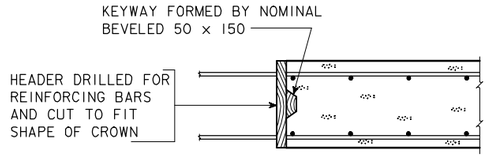

TRANSVERSE CONSTR. JOINT

BRIDGE LENGTH	LENGTH OF DRAIN	MASS kg/DRAIN
21 000	420	12
24 000	440	13
27 000	465	14
30 000	495	15
33 000	520	15
36 000	560	16
39 000	590	17

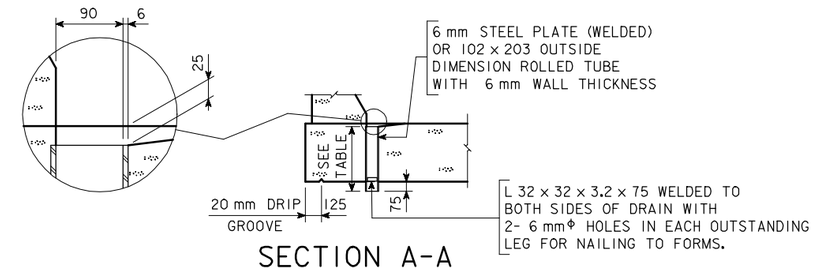

SECTION A-A

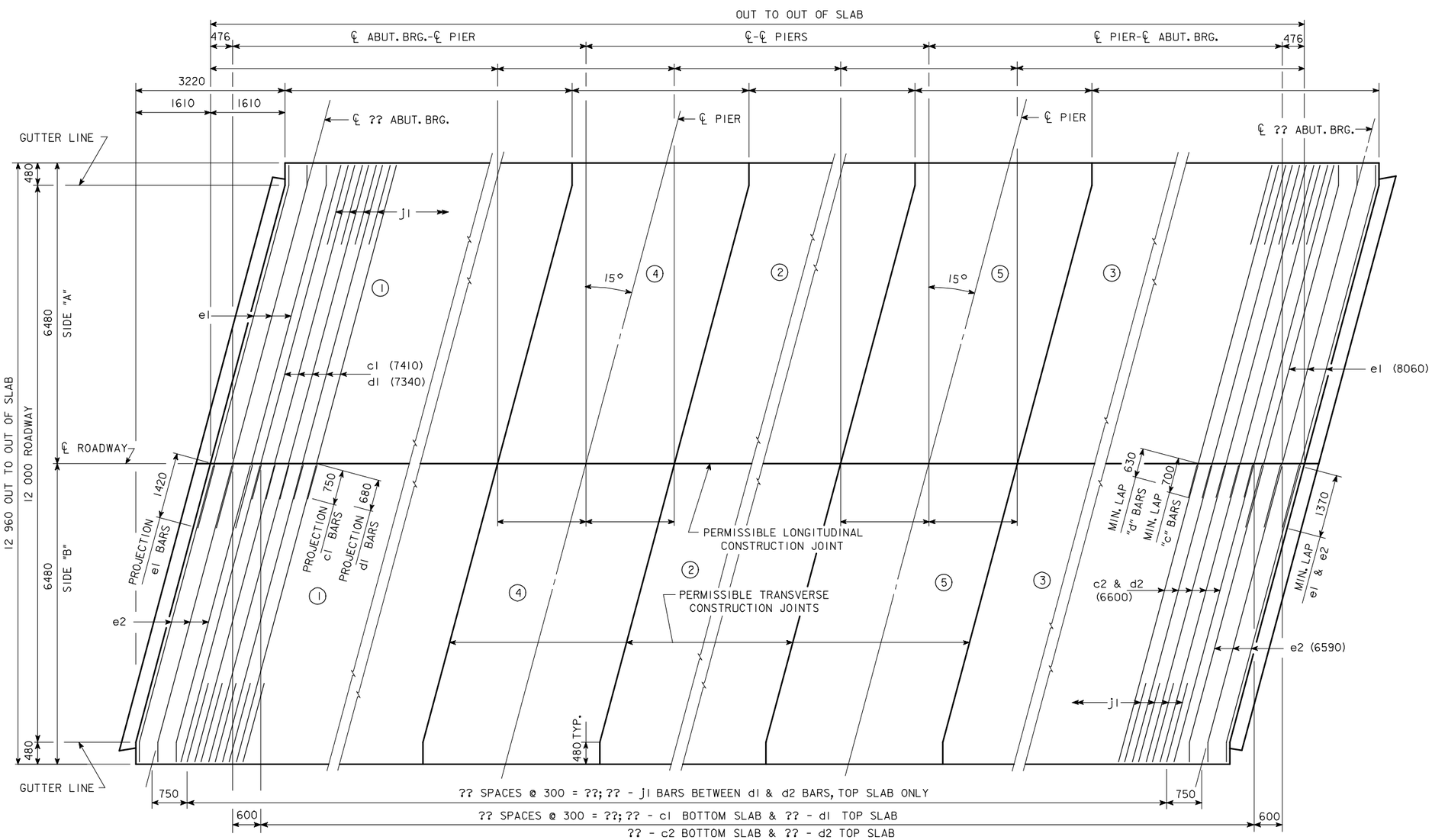

TRANSVERSE REINFORCING STEEL LAYOUT & CONCRETE PLACEMENT DIAGRAM

NOTE: ENCIRCLED NUMBERS DO NOT INDICATE SEQUENCE OF CONCRETE PLACEMENT. (SEE SUPERSTRUCTURE NOTES)

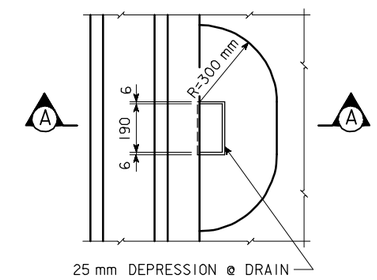

PART PLAN

DRAIN DETAILS

NOTE: DRAINS ARE TO BE GALVANIZED. ?? DRAINS REQUIRED, SEE "SITUATION PLAN" FOR LOCATION. MASS IS BASED ON WELDED PLATE. COST OF DRAINS TO BE INCLUDED IN PRICE BID FOR CONCRETE.

CONCRETE PLACEMENT QUANT.-SUPERSTR.

LOCATION	SIDE "A"	SIDE "B"	TOTAL
SLAB SECTION 1			
SLAB SECTION 2			
SLAB SECTION 3			
SLAB SECTION 4			
SLAB SECTION 5			
WINGS	4 @ 0.50 m^3		2.0
		TOTAL - m^3	

IOWA DEPARTMENT OF TRANSPORTATION - HIGHWAY DIVISION

DESIGN SHEET NO. ____ OF ____ FILE NO. _____ DESIGN NO. _____

REVISED 07-05 - PAVING NOTCH EXTENDED TO INTERCEPT THE WINGS.
HM4457.SOI: THIS SHEET ISSUED 9-1-95.

DESIGN TEAM	CONCRETE SLAB, PLACEMENT DIAGRAM - 12 000 mm ROADWAY - 15° SKEW L.A.	STANDARD SHEET M4457	COUNTY	PROJECT NUMBER	SHEET NUMBER

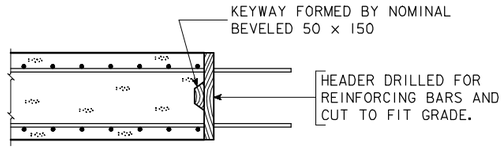

LONGITUDINAL CONSTR. JOINT

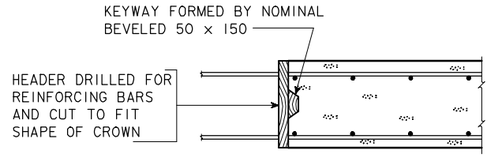

TRANSVERSE CONSTR. JOINT

BRIDGE LENGTH	LENGTH OF DRAIN	MASS kg/DRAIN
21 000	420	12
24 000	440	13
27 000	465	14
30 000	495	15
33 000	520	15
36 000	560	16
39 000	590	17

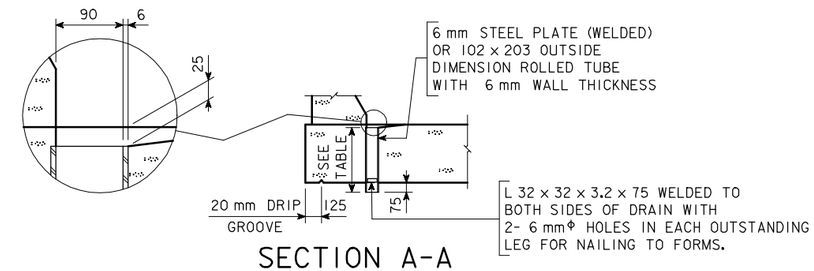

SECTION A-A

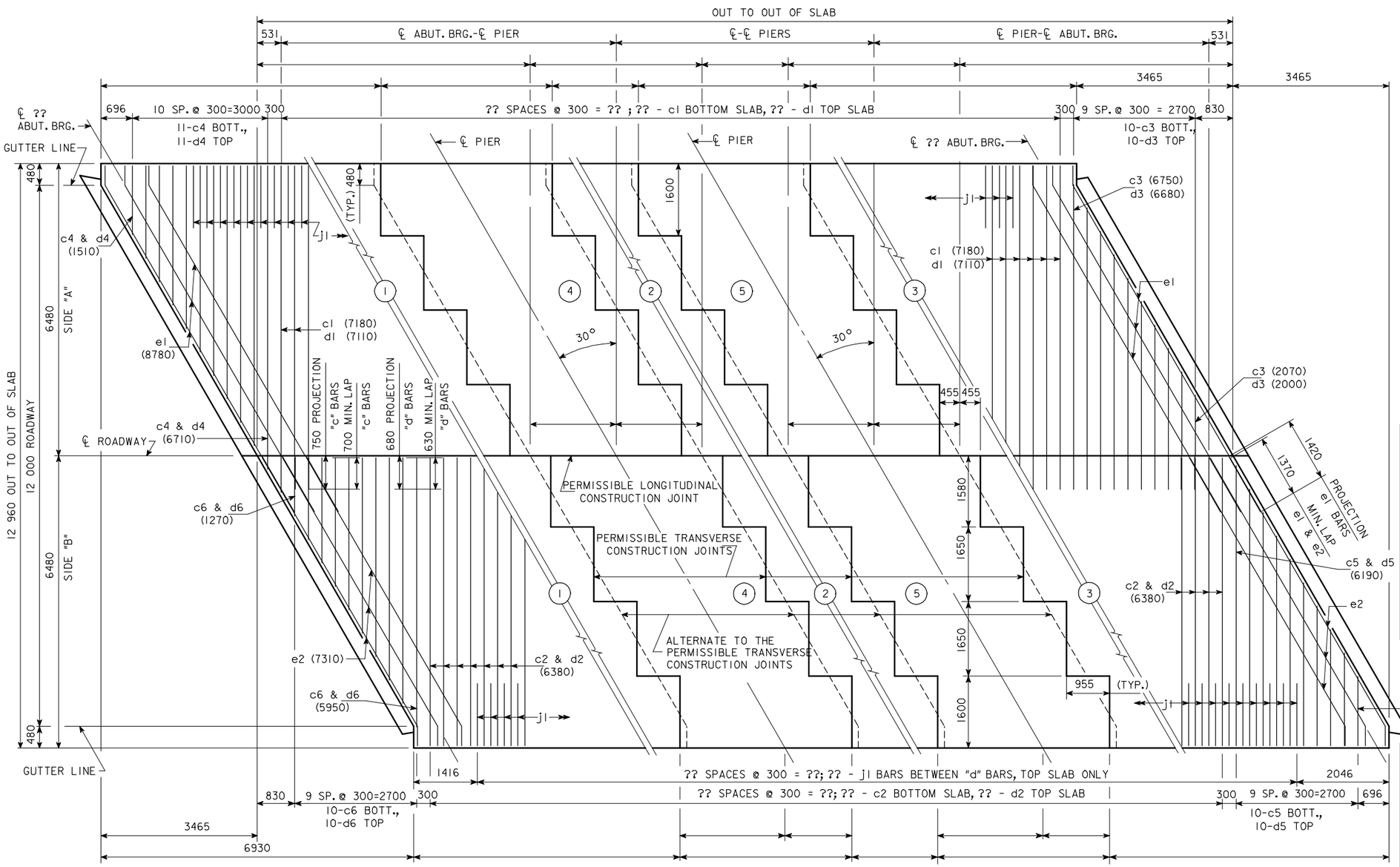

TRANSVERSE REINFORCING STEEL LAYOUT & CONCRETE PLACEMENT DIAGRAM

NOTE: ENCIRCLED NUMBERS DO NOT INDICATE SEQUENCE OF CONCRETE PLACEMENT. (SEE SUPERSTRUCTURE NOTES)

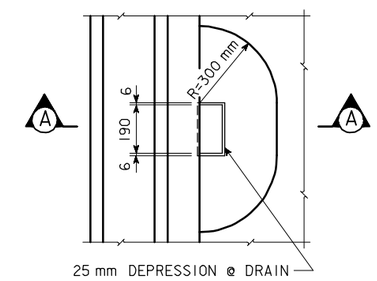

PART PLAN

DRAIN DETAILS

NOTE: DRAINS ARE TO BE GALVANIZED. ?? DRAINS REQUIRED, SEE "SITUATION PLAN" FOR LOCATION. MASS IS BASED ON WELDED PLATE. COST OF DRAINS TO BE INCLUDED IN PRICE BID FOR CONCRETE.

CONCRETE PLACEMENT QUANT.-SUPERSTR.

LOCATION	SIDE "A"	SIDE "B"	TOTAL
SLAB SECTION 1			
SLAB SECTION 2			
SLAB SECTION 3			
SLAB SECTION 4			
SLAB SECTION 5			
WINGS	4 @ 0.50 m^3		2.0
		TOTAL - m^3	

IOWA DEPARTMENT OF TRANSPORTATION - HIGHWAY DIVISION

DESIGN SHEET NO. ____ OF ____ FILE NO. _____ DESIGN NO. _____

REVISED 07-05 - PAVING NOTCH EXTENDED TO INTERCEPT THE WINGS.
HM4458.SOI: THIS SHEET ISSUED 9-1-95.

DESIGN TEAM	CONCRETE SLAB, PLACEMENT DIAGRAM - 12 000 mm ROADWAY - 30° SKEW R.A.	STANDARD SHEET M4458	COUNTY	PROJECT NUMBER	SHEET NUMBER

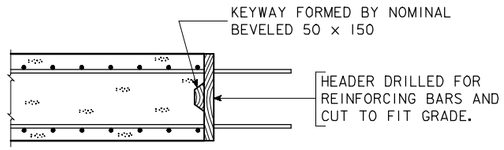

LONGITUDINAL CONSTR. JOINT

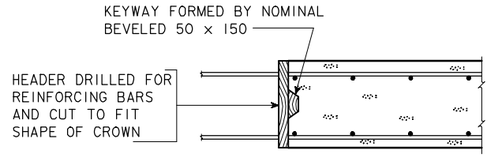

TRANSVERSE CONSTR. JOINT

BRIDGE LENGTH	LENGTH OF DRAIN	MASS kg/DRAIN
21 000	420	12
24 000	440	13
27 000	465	14
30 000	495	15
33 000	520	15
36 000	560	16
39 000	590	17

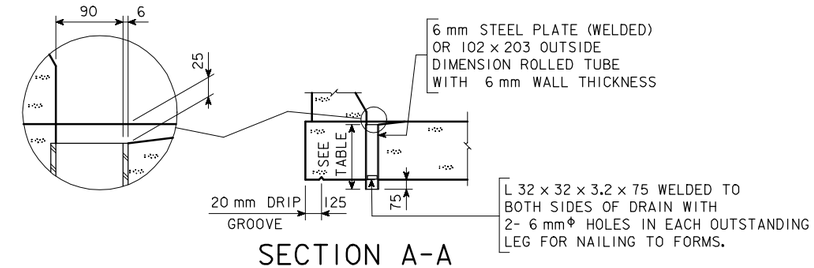

SECTION A-A

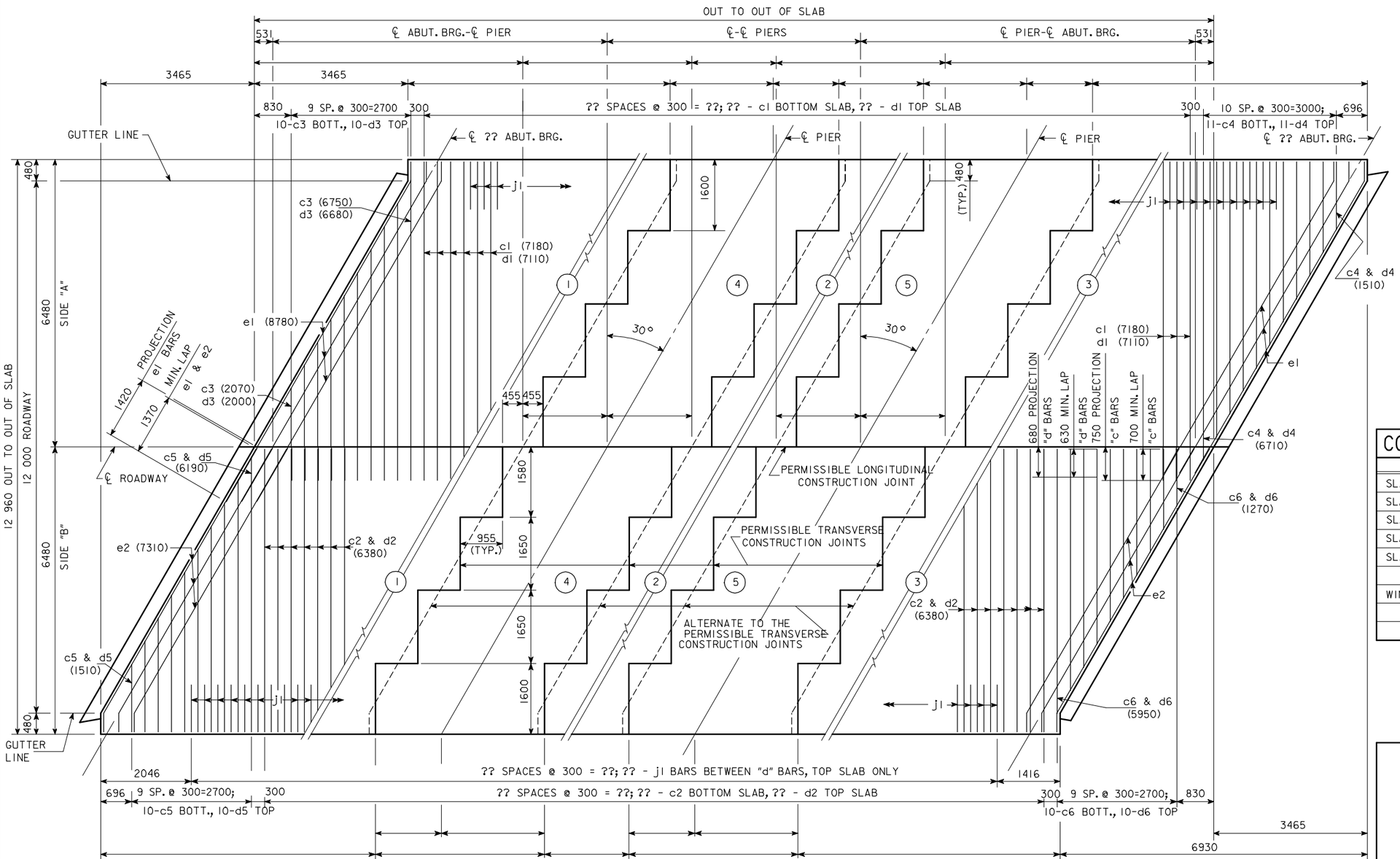

TRANSVERSE REINFORCING STEEL LAYOUT & CONCRETE PLACEMENT DIAGRAM

NOTE: ENCIRCLED NUMBERS DO NOT INDICATE SEQUENCE OF CONCRETE PLACEMENT. (SEE SUPERSTRUCTURE NOTES)

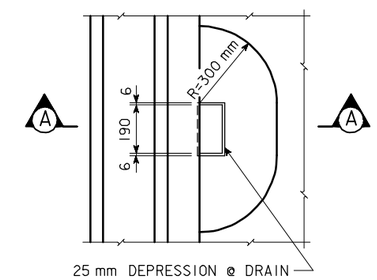

PART PLAN

DRAIN DETAILS

NOTE: DRAINS ARE TO BE GALVANIZED. ?? DRAINS REQUIRED, SEE "SITUATION PLAN" FOR LOCATION. MASS IS BASED ON WELDED PLATE. COST OF DRAINS TO BE INCLUDED IN PRICE BID FOR CONCRETE.

CONCRETE PLACEMENT QUANT.-SUPERSTR.

LOCATION	SIDE "A"	SIDE "B"	TOTAL
SLAB SECTION 1			
SLAB SECTION 2			
SLAB SECTION 3			
SLAB SECTION 4			
SLAB SECTION 5			
WINGS	4 @ 0.50 m^3		2.0
		TOTAL - m^3	

IOWA DEPARTMENT OF TRANSPORTATION - HIGHWAY DIVISION

DESIGN SHEET NO. ____ OF ____ FILE NO. _____ DESIGN NO. _____

REVISED 07-05 - PAVING NOTCH EXTENDED TO INTERCEPT THE WINGS.
HM4459.SOI: THIS SHEET ISSUED 9-1-95.

DESIGN TEAM	CONCRETE SLAB, PLACEMENT DIAGRAM - 12 000 mm ROADWAY - 30° SKEW L.A.	STANDARD SHEET M4459	COUNTY	PROJECT NUMBER	SHEET NUMBER