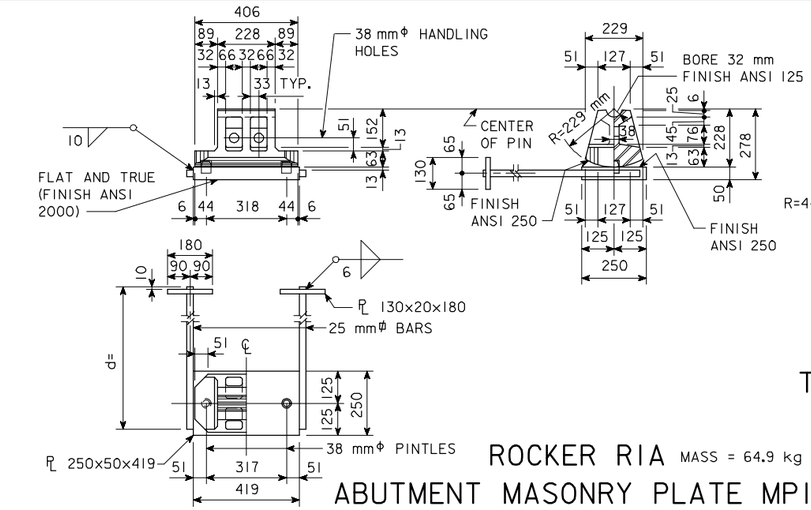

ROCKER R1A MASS = 64.9 kg

ABUTMENT MASONRY PLATE MP1A MASS = 48.9 kg

*MASS DOES NOT INCLUDE 25 mmΦ BARS

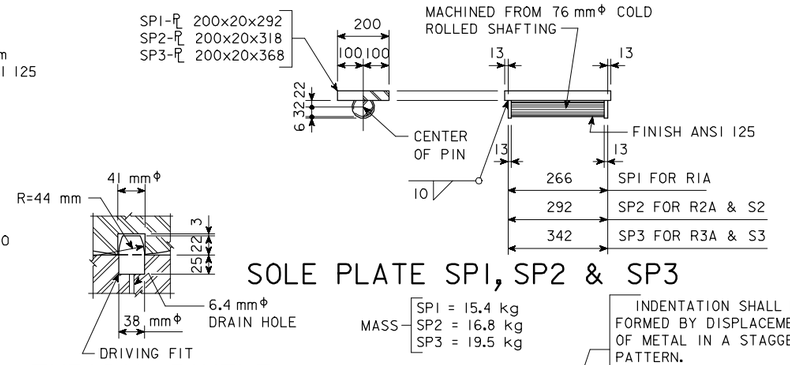

SOLE PLATE SP1, SP2 & SP3

TYPICAL PINTLE DETAIL

ANCHOR BOLT SWEDGE DETAIL

BEARING NOTES:

THE CASTING OF R1A, R2A, S2, R3A AND S3 SHALL COMPLY WITH ARTICLE 4153.04 OF THE I.D.O.T. STANDARD SPECIFICATIONS. CASTINGS MAY BE GRAY IRON OR NODULAR IRON.

THE PINS SHALL COMPLY WITH ARTICLE 4153.02 OF THE I.D.O.T. STANDARD SPECIFICATIONS AND WITH THE REQUIREMENTS OF ASTM A 108 STEEL.

ANCHOR BOLTS SHALL BE SET IN ACCORDANCE WITH ARTICLE 2405.09 OF THE I.D.O.T. STANDARD SPECIFICATIONS.

ALL BEARINGS ARE TO BE SET ON A 3 mm LEAD SHEET IN ACCORDANCE WITH ARTICLE 2408.34 OF THE SPECIFICATIONS.

AS SOON AS THE SURFACING PROCESS IS DONE, THE SURFACES FINISHED WITH AN ANSI 125 FINISH SHALL BE SHOP COATED WITH AN APPLICATION OF WATERPROOF NATIONAL LUBRICATING GREASE INSTITUTE NO. 3 MULTIPURPOSE GREASE. JUST BEFORE THE ERECTION OF THE STRUCTURAL STEEL IN THE FIELD, THE SHOP COATED SURFACES ARE TO BE WIPED CLEAN AND A FIELD COAT OF N.L.G.I. NO. 3 GREASE IS TO BE APPLIED.

AFTER MASONRY PLATES AND ROCKERS ARE IN CORRECT LOCATION, FILL SLOTTED HOLES AROUND ANCHOR BOLTS WITH A HYDRAULIC CEMENT OR POLYMER GROUT IN ACCORDANCE WITH ARTICLE 2405.09 OF THE STANDARD SPECIFICATIONS.

ALL MASONRY PLATES, SWEDGE ANCHOR BOLTS, NUTS AND WASHERS SHALL BE GALVANIZED. GALVANIZING SHALL BE IN ACCORDANCE WITH ARTICLE 4100.07 OF THE STANDARD SPECIFICATIONS.

MASONRY PLATES MP1A, MP2A AND MP3A SHALL BE GALVANIZED AFTER THE 25 mmΦ BARS HAVE BEEN WELDED TO THE MASONRY PLATE.

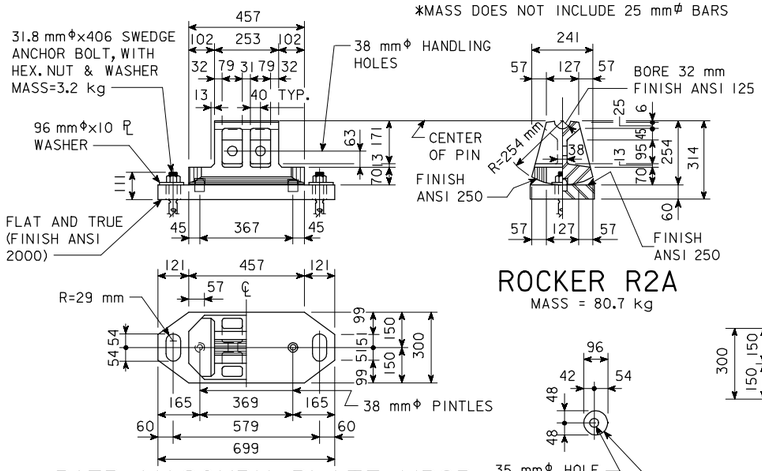

ROCKER R2A
MASS = 80.7 kg

PIER MASONRY PLATE MP2P
MASS = 82.7 kg

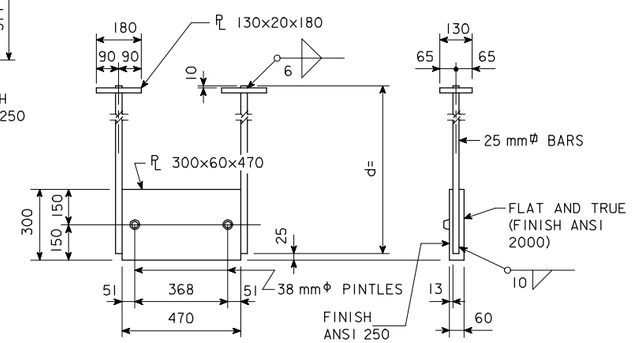

ABUTMENT MASONRY PLATE MP2A
MASS = 74.2 kg (DOES NOT INCLUDE 25 mmΦ BARS)

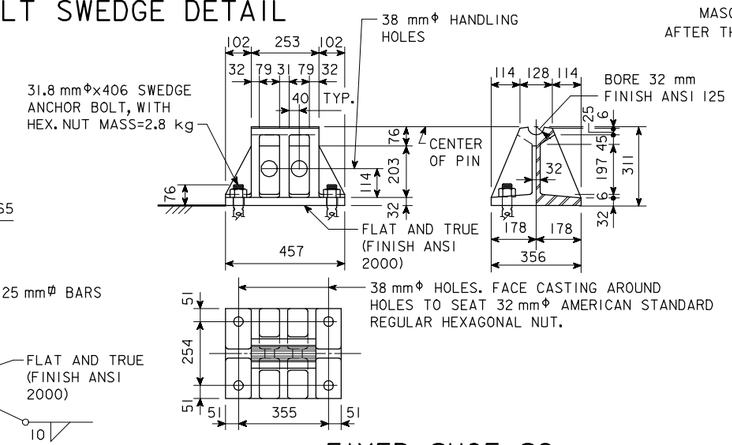

FIXED SHOE S2
MASS = 100.7 kg
(SIMILAR TO S2 V12-1)

DISTANCE FROM TOP OF SOLE PLATE TO BRIDGE SEAT

ROCKERS & FIXED SHOES	ROCKER	FIXED SHOE
R1A	323	——
R2A & S2	359	356
R3A & S3	420	413

D*

* INCLUDING 3 mm LEAD SHEET.

MAXIMUM REACTION (kN)

R1A	R2A S2	R3A S3
587	761	1170

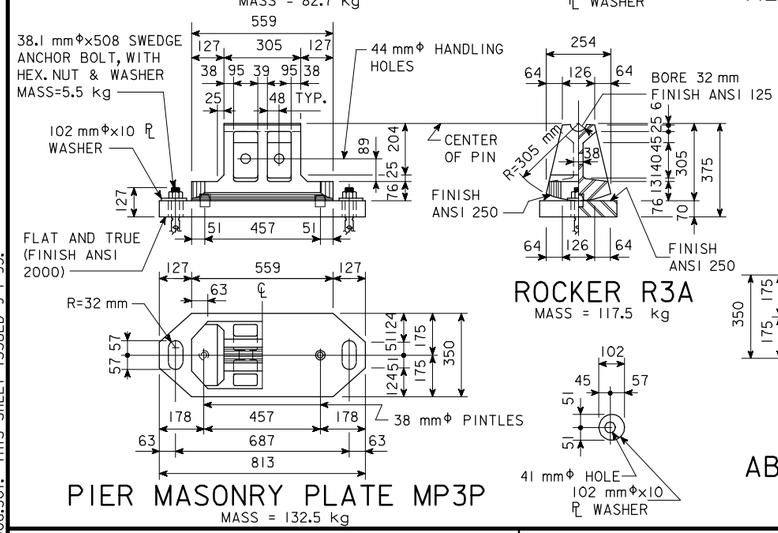

ROCKER R3A
MASS = 117.5 kg

PIER MASONRY PLATE MP3P
MASS = 132.5 kg

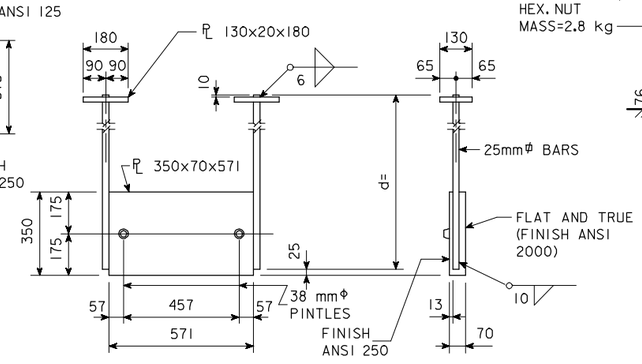

ABUTMENT MASONRY PLATE MP3A
MASS = 117.6 kg (DOES NOT INCLUDE 25 mmΦ BARS)

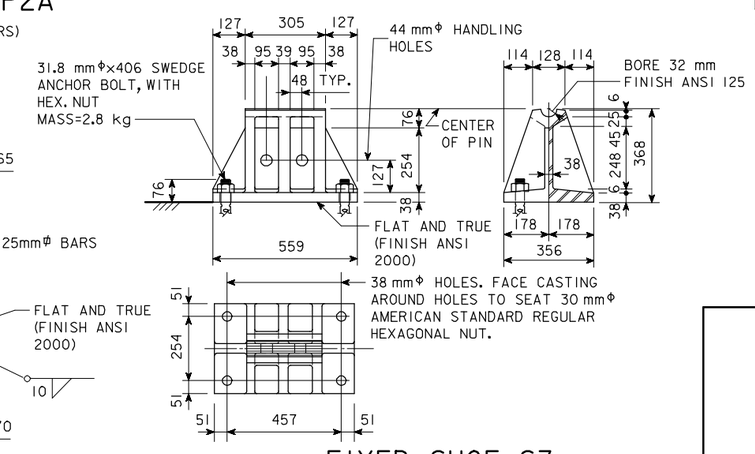

FIXED SHOE S3
MASS = 158.3 kg
(SIMILAR TO S1 V10A-7)

IOWA DEPARTMENT OF TRANSPORTATION - HIGHWAY DIVISION

DESIGN SHEET NO. ____ OF ____ FILE NO. _____ DESIGN NO. _____

REVISED 07-04 - 6.4 mmΦ DRAIN HOLE ADDED TO TYPICAL PINTLE DETAIL.
HM1008.S01: THIS SHEET ISSUED 9-1-95.

DESIGN TEAM	BEARING STANDARD	STANDARD SHEET M1008	COUNTY	PROJECT NUMBER	SHEET NUMBER

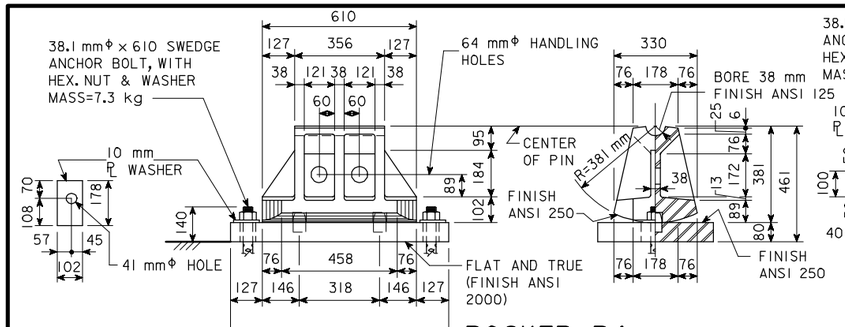

ROCKER R4

MASS = 210.5 kg

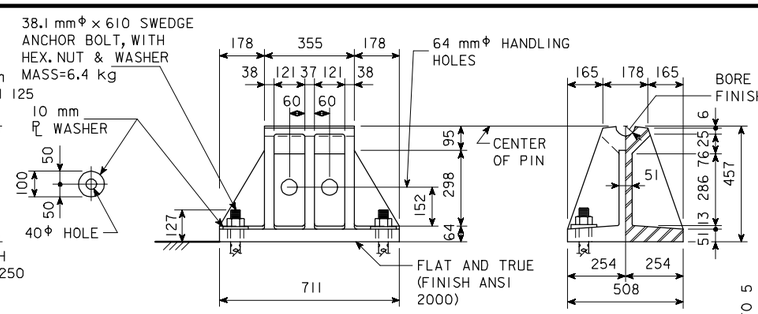

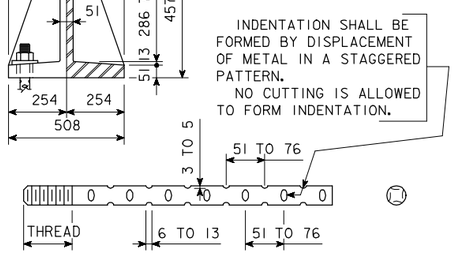

ANCHOR BOLT SWEDGE DETAIL

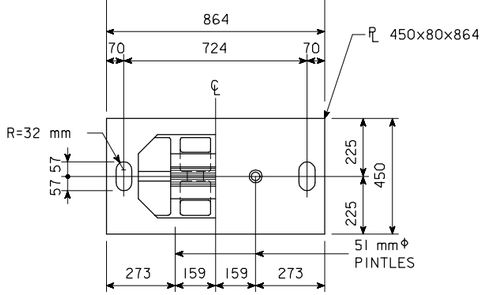

PIER MASONRY PLATE MP4P

MASS = 216.8 kg

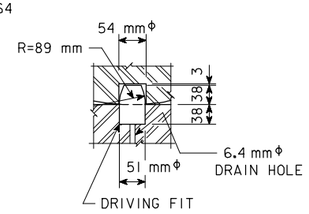

TYPICAL PINTLE DETAIL

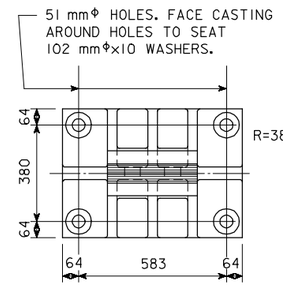

FIXED SHOE S4

MASS = 333.4 kg

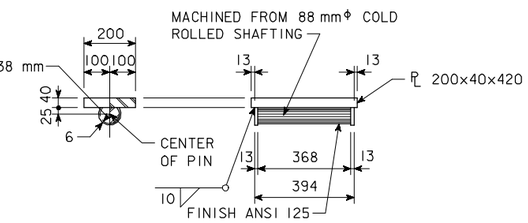

SOLE PLATE SP4 FOR R4 & S4

MASS = 39.0 kg

BEARING NOTES:

CASTINGS R4, R5, S4 AND S5 SHALL BE NODULAR IRON CASTINGS COMPLYING WITH ARTICLE 4153.04 OF THE STANDARD SPECIFICATIONS.

MASONRY PLATES MP4P AND MP5P SHALL BE EITHER NODULAR IRON CASTINGS COMPLYING WITH ARTICLE 4153.04 OR STRUCTURAL STEEL COMPLYING WITH ASTM A-572, EXCEPT THAT THE S2 (IMPACT PROPERTIES) OF AASHTO M223 SHALL NOT APPLY. PINS SHALL COMPLY WITH ARTICLE 4153.02 OF THE STANDARD SPECIFICATIONS AND WITH ASTM A-108.

ANCHOR BOLTS SHALL BE SET IN ACCORDANCE WITH ARTICLE 2405.09 OF THE STANDARD SPECIFICATIONS.

ALL BEARINGS ARE TO BE SET ON A 3 mm LEAD SHEET IN ACCORDANCE WITH ARTICLE 2408.34 OF THE SPECIFICATIONS.

AS SOON AS THE SURFACING PROCESS IS DONE, THE SURFACES FINISHED WITH AN ANSI 125 FINISH SHALL BE SHOP COATED WITH AN APPLICATION OF WATERPROOF NATIONAL LUBRICATING GREASE INSTITUTE NO. 3 MULTIPURPOSE GREASE. JUST BEFORE THE ERECTION OF THE STRUCTURAL STEEL IN THE FIELD, THE SHOP COATED SURFACES ARE TO BE WIPED CLEAN AND A FIELD COAT OF N.L.G.I. NO. 3 GREASE IS TO BE APPLIED.

AFTER MASONRY PLATES AND ROCKERS ARE IN CORRECT LOCATION, FILL SLOTTED HOLES AROUND ANCHOR BOLTS WITH A HYDRAULIC CEMENT OR POLYMER GROUT IN ACCORDANCE WITH ARTICLE 2405.09 OF THE STANDARD SPECIFICATIONS.

ALL MASONRY PLATES, SWEDGE ANCHOR BOLTS, NUTS AND WASHERS SHALL BE GALVANIZED. GALVANIZING SHALL BE IN ACCORDANCE WITH ARTICLE 4100.07 OF THE STANDARD SPECIFICATIONS.

PERMISSIBLE CLAMPING HOLES NOTE:

PERMISSIBLE CORED HOLE (32 mmΦx25 DEEP) MAY BE INTRODUCED TO FACILITATE CLAMPING TO THE MILLING TABLE. THE CORED HOLE SHOULD BE LOCATED AT MID DEPTH OF PLATE.

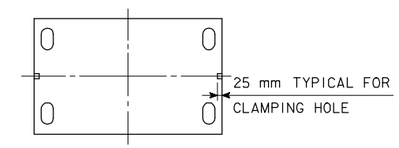

MP5Pa

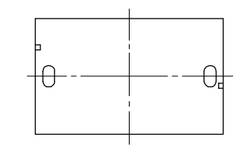

MP5Pb & MP4P

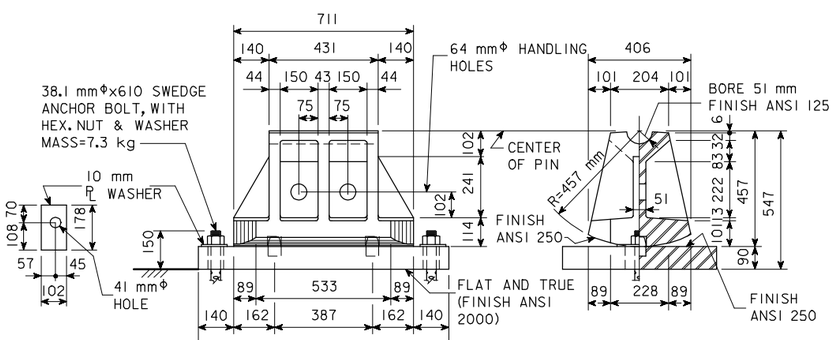

ROCKER R5

MASS = 352 kg

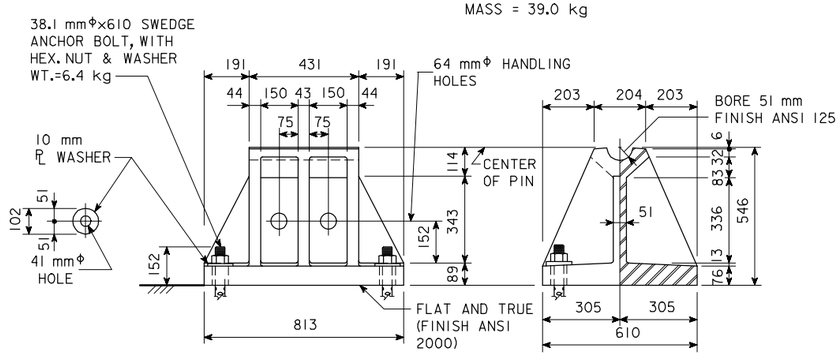

DISTANCE FROM TOP OF SOLE PLATE TO BRIDGE SEAT

ROCKERS & FIXED SHOES	ROCKER	FIXED SHOE
R4 & S4	529	525
R5 & S5	632	631

* INCLUDING 3 mm LEAD SHEET.

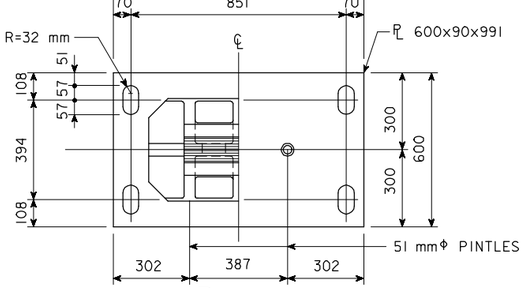

PIER MASONRY PL MP5Pa FOR SPAN LENGTH GREATER THAN 45 700

MASS = 369.1 kg

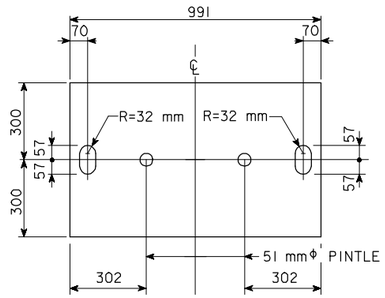

PIER MASONRY PL MP5Pb FOR SPAN LENGTH 30 800 TO 45 700

MASS = 378.3 kg

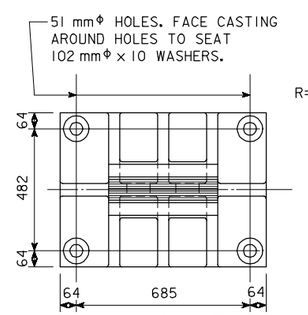

FIXED SHOE S5

MASS = 577.9 kg

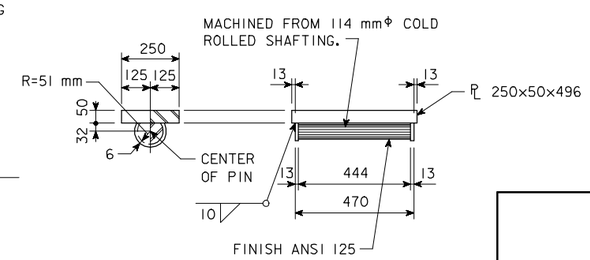

SOLE PLATE SP5 FOR R5 & S5

MASS = 75.2 kg

MAXIMUM REACTION

(kN)

R4 S4	R5 S5
2113	2891

IOWA DEPARTMENT OF TRANSPORTATION - HIGHWAY DIVISION

DESIGN SHEET NO. ____ OF ____ FILE NO. _____ DESIGN NO. _____

REVISED 07-04 - 6.4 mmΦ DRAIN HOLE ADDED TO TYPICAL PINTLE DETAIL.
HM1009.SOI: THIS SHEET ISSUED 9-1-95.

DESIGN TEAM	BEARING STANDARD	STANDARD SHEET M1009	COUNTY	PROJECT NUMBER	SHEET NUMBER

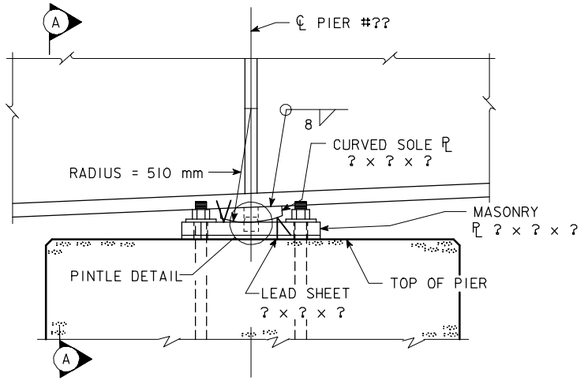

PART ELEVATION

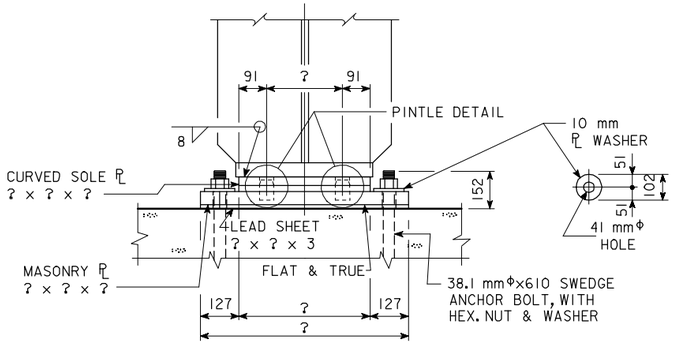

SECTION A-A

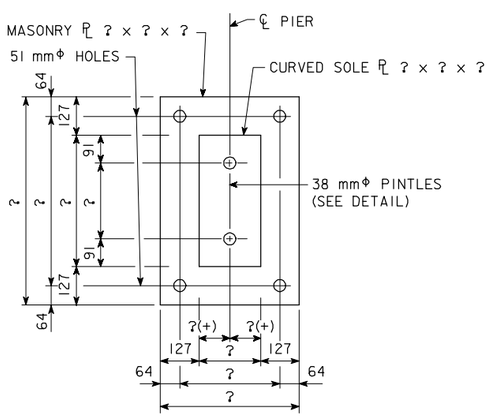

PLAN VIEW OF MASONRY AND SOLE PLATES

FIXED PIER

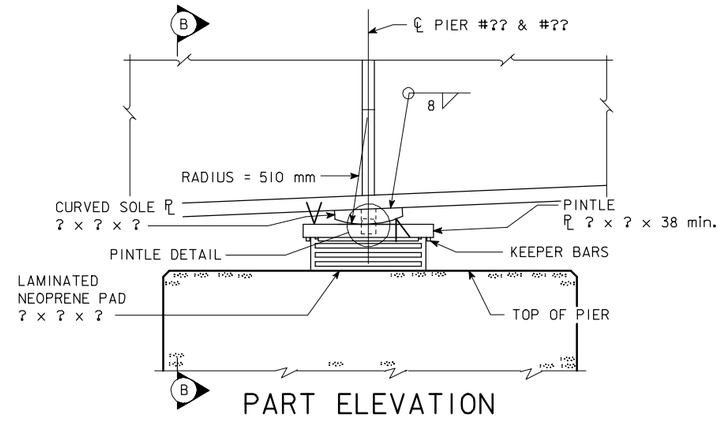

PART ELEVATION

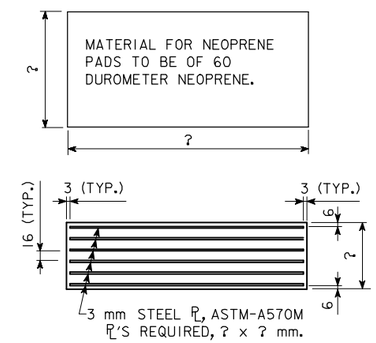

LAMINATED NEOPRENE PADS

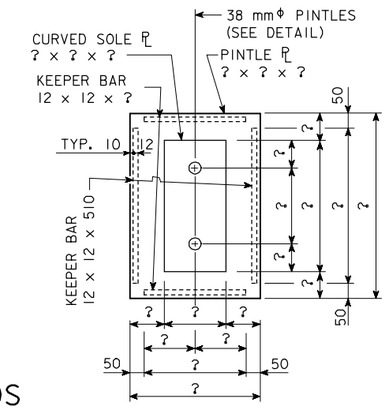

PLAN OF
PINTLE PLATE

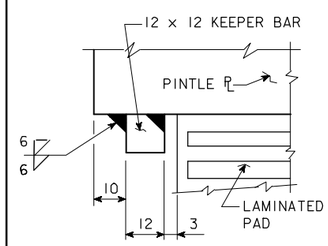

DETAIL C

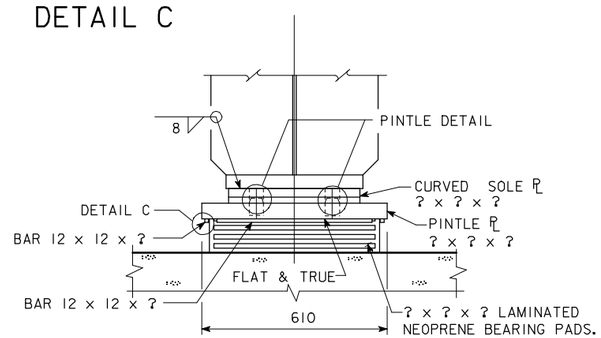

SECTION B-B

EXPANSION PIER

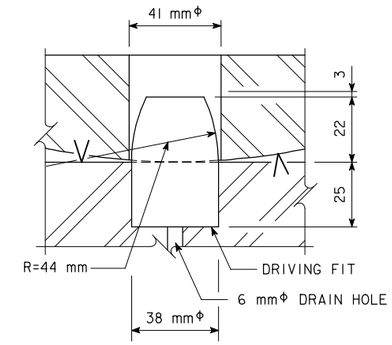

PINTLE DETAIL

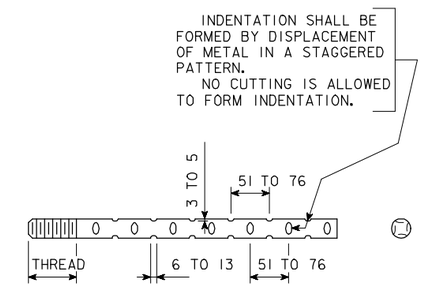

ANCHOR BOLT SWEDGE DETAIL

BEARING NOTES:

SURFACES MARKED "V" SHALL BE FINISHED 6 μm.

MASONRY PLATES ARE TO BE SET ON A 3 mm LEAD SHEET.

PINTLE PLATES, SOLE PLATES, MASONRY PLATES, AND LEAD SHEETS ARE A PART OF THE SUPERSTRUCTURE STRUCTURAL STEEL QUANTITY. UNIT PRICE BID FOR "STRUCTURAL STEEL" SHALL INCLUDE ALLOWANCE FOR COST OF THE NEOPRENE BEARING PADS.

THE PINTLE PLATES, KEEPER BARS, AND MASONRY PLATES SHALL BE GALVANIZED. WELDING SHALL BE COMPLETED PRIOR TO GALVANIZING. THE SURFACES OF THE PINTLE PLATE IN CONTACT WITH THE CURVED SOLE PLATE AND THE LAMINATED NEOPRENE PAD SHALL BE FREE OF PROJECTIONS DUE TO GALVANIZING.

CURVED SOLE PLATES SHALL COMPLY WITH ASTM A 709M GRADE 345W AND PAINTED AS PER STANDARD SPECIFICATIONS.

KEEPER BARS, PINTLE PLATES AND MASONRY PLATES SHALL COMPLY WITH ASTM A 709M GRADE 345.

ANCHOR BOLTS, NUTS AND WASHERS SHALL MEET THE REQUIREMENTS OF IM 453.08.

IOWA DEPARTMENT OF TRANSPORTATION - HIGHWAY DIVISION

DESIGN SHEET NO. ____ OF ____ FILE NO. _____ DESIGN NO. _____

HM1010.SOI - THIS SHEET ISSUED 07-04.

DESIGN TEAM	LOW PROFILE BEARING STANDARD	STANDARD SHEET M1010	COUNTY	PROJECT NUMBER	SHEET NUMBER

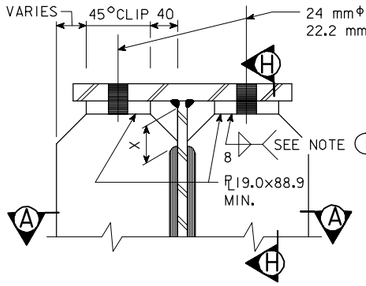

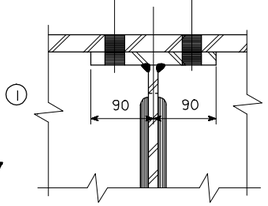

SECTION H-H

NOTE 1
WELD AFTER PLATE IS BOLTED TO FLANGE. (SEE DETAIL A FOR WELD LOCATION).

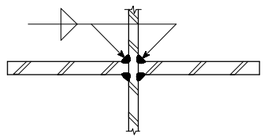

SECTION A-A

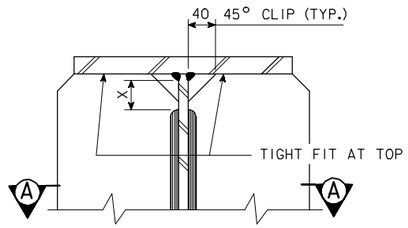

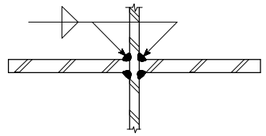

SECTION A-A

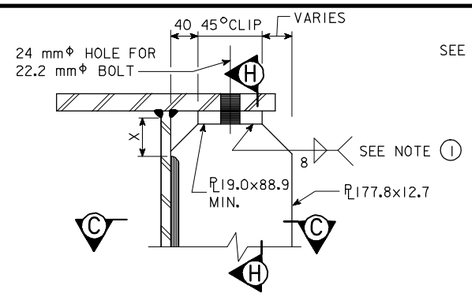

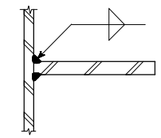

SECTION C-C

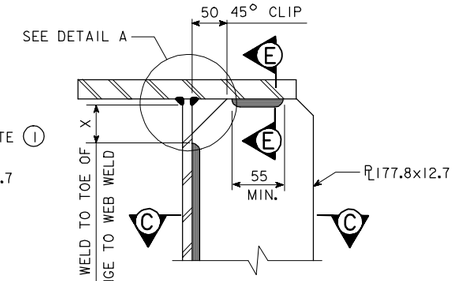

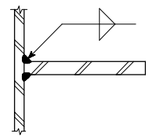

SECTION C-C

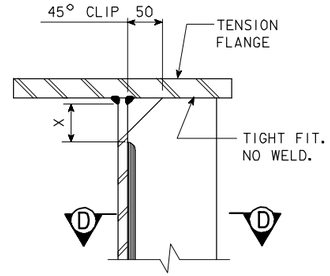

SECTION D-D

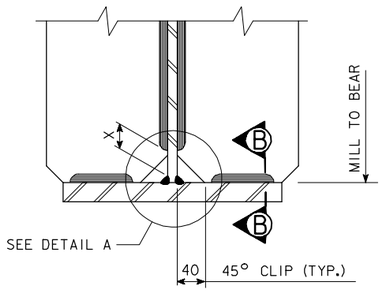

PIER BEARING STIFFENER (SKEWED BRIDGES WITH ALL DIAPHRAGMS PERPENDICULAR TO GIRDERS)

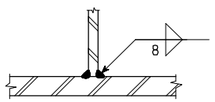

SECTION B-B

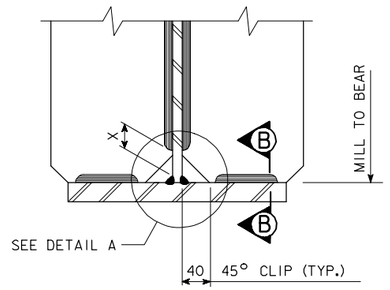

ALL ABUTMENT BEARING STIFFENERS
PIER BEARING STIFFENER (0° SKEW OR BRIDGES WITH PIER DIAPHRAGMS PARALLEL TO ℄ OF PIER)

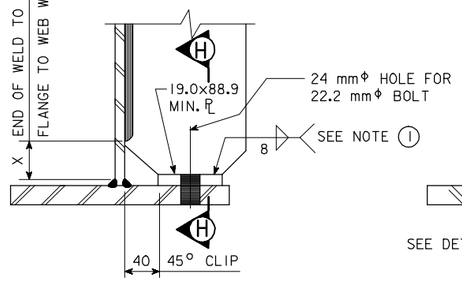

INTERMEDIATE DIAPHRAGM STIFFENER BRIDGES DESIGNED FOR CASE I LIVE LOAD

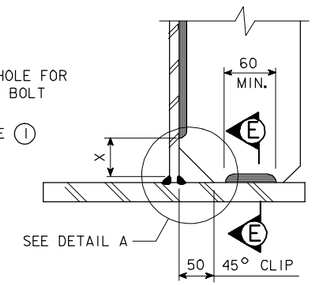

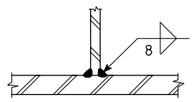

SECTION E-E

INTERMEDIATE DIAPHRAGM STIFFENER BRIDGES DESIGNED FOR CASE II LIVE LOAD

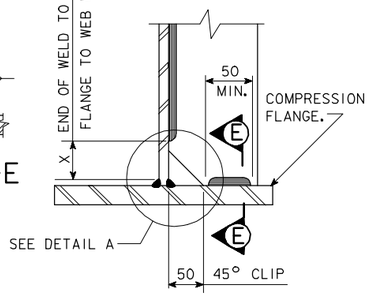

INTERMEDIATE STIFFENER

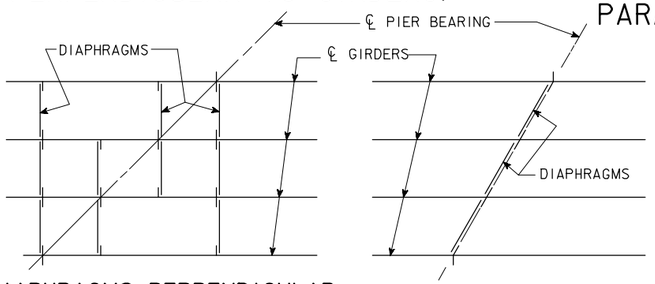

DIAPHRAGMS PERPENDICULAR TO GIRDERS

DIAPHRAGMS PARALLEL TO ℄ OF PIER

TYPES OF DIAPHRAGM FRAMING

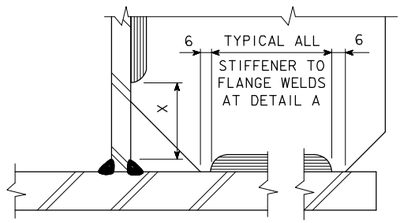

DETAIL A

T - WEB THICKNESS	x = 5T WITH 60 mm MIN.
10	60
12	60
14	70
16	80
18	90

FLANGE DEFLECTORS ARE REQUIRED ON THE OUTSIDE OF THE EXTERIOR GIRDERS AT THE ? ABUTMENTS AND THE ? SIDE OF ALL PIERS.

ADDITIONAL DETAILS

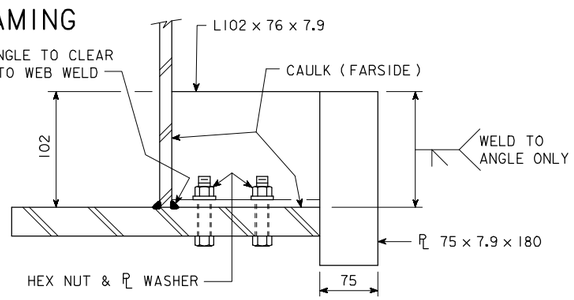

SECTION G-G

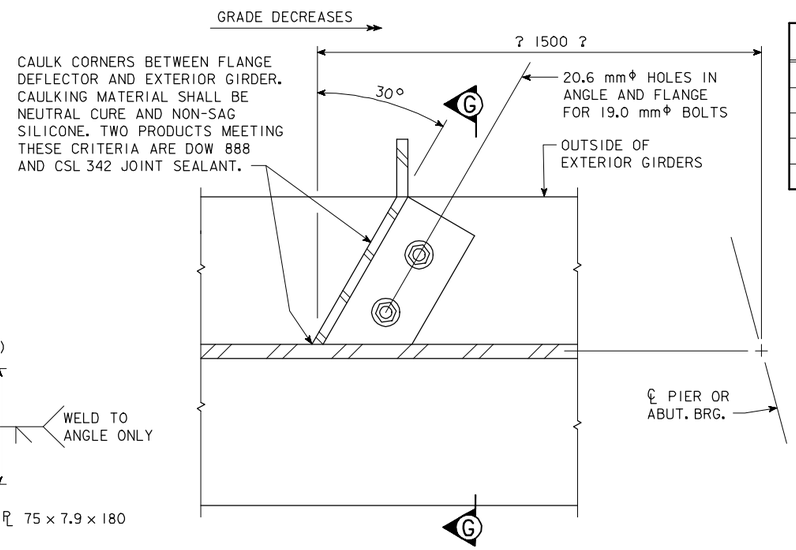

FLANGE DEFLECTOR DETAILS
(? REQUIRED PER BRIDGE)

NOTE:
THIS SHEET IS PRIMARILY FOR THE USE OF FABRICATOR'S WORKMEN AND IOWA DEPARTMENT OF TRANSPORTATION INSPECTORS IN INTERPRETING PLAN DETAILS. IT COVERS THE LOCATIONS OF WELD TERMINI THAT ARE NOT SPECIFIED BY TYPICAL WELD SYMBOLS.
THE ACCEPTABILITY AND USE OF THE WELD TREATMENT SHOWN ON THIS SHEET FOR ANY SPECIFIC PROJECT IS THE RESPONSIBILITY OF THE DESIGNING ENGINEER.

IOWA DEPARTMENT OF TRANSPORTATION - HIGHWAY DIVISION
DESIGN SHEET NO. ____ OF ____ FILE NO. _____ DESIGN NO. _____

REVISED 07-04 - SECTION G-G CHANGED.
HM1021.SOI: THIS SHEET ISSUED 9-1-95.

DESIGN TEAM	WELDING DETAILS	STANDARD SHEET M1021	COUNTY	PROJECT NUMBER	SHEET NUMBER

10-FEB-2006 13:49 ajeffer W:\Projects\0000006002\BRFinal\MetricBeams.dgn m1021

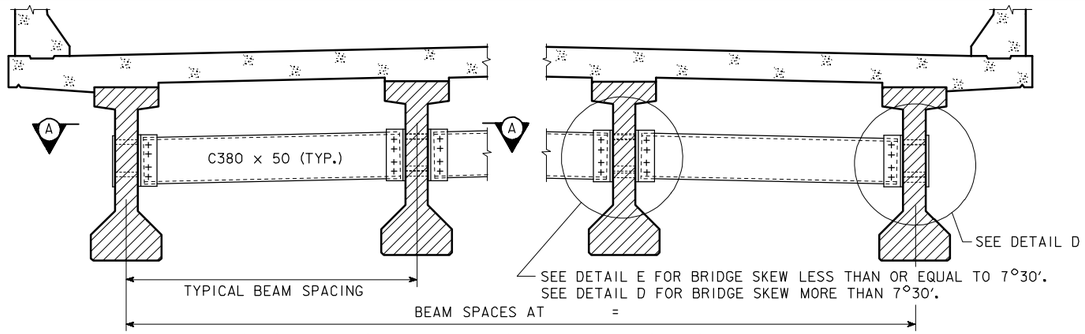

SECTION SHOWING INTERMEDIATE DIAPHRAGM

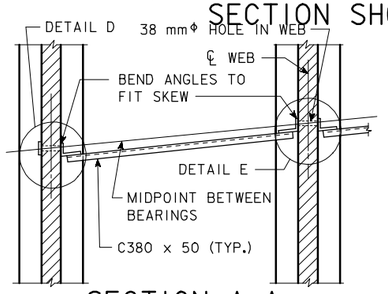

SECTION A-A

FOR BRIDGES SKEWED LESS THAN OR EQUAL TO 7°30′

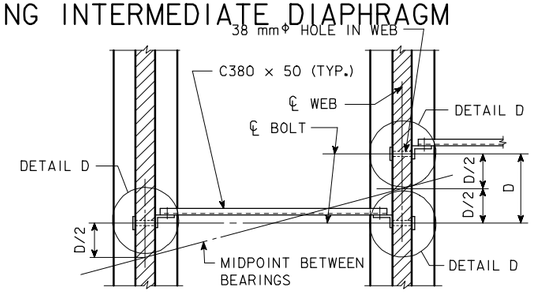

SECTION A-A

FOR BRIDGES SKEWED MORE THAN 7°30′.

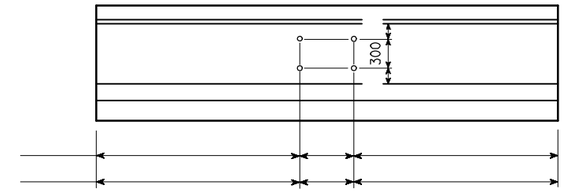

INTERMEDIATE DIAPHRAGM BOLT LOCATIONS

(7°31′ TO 30° SKEW)

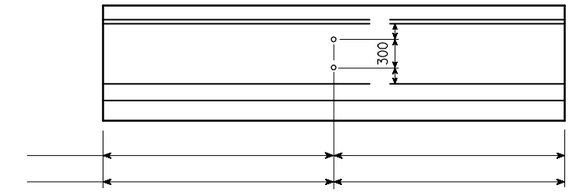

INTERMEDIATE DIAPHRAGM BOLT LOCATIONS

(0° TO 7°30′ SKEW)

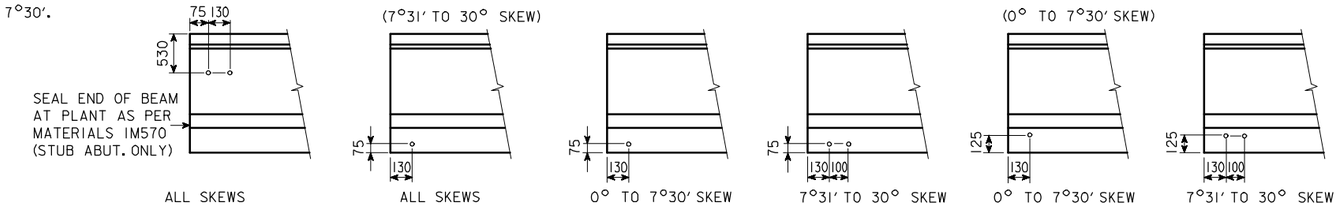

BEAM COIL TIE LOCATIONS

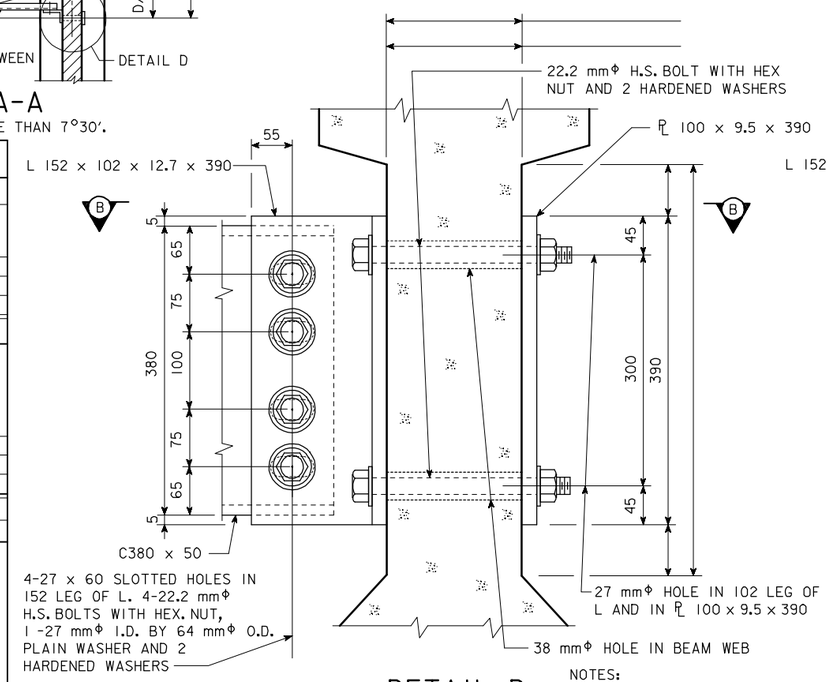

DETAIL D

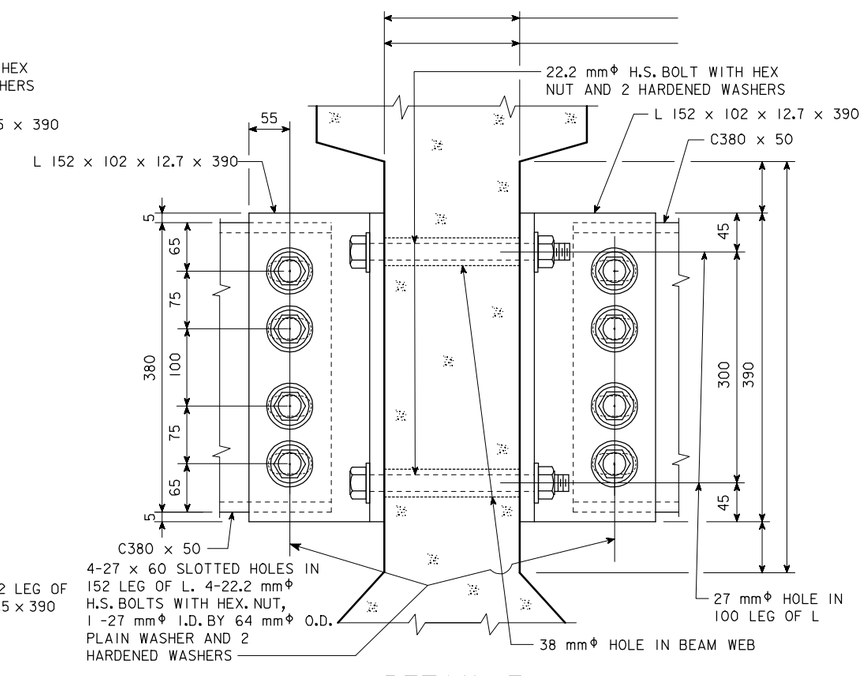

DETAIL E

INTERMEDIATE DIAPHRAGM STRUCTURAL STEEL

ONE CONNECTION DETAIL "E"				MASS
2 - 22.2 mmΦ x LENGTH H.S. BOLTS WITH NUTS & WASHERS				
WEB THICKNESS	LENGTH OF H.S. BOLTS	MASS PER DETAIL "E"	NUMBER OF DETAIL "E"	
150	229	2.0		
180	254	2.1		
230	305	2.4		
2 - L 152 x 102 x 12.7 x 390 = 18.8 kg				

ONE CONNECTION DETAIL "D"				
2 - 22.2 mmΦ x LENGTH H.S. BOLTS WITH NUTS & WASHERS				
WEB THICKNESS	LENGTH OF H.S. BOLTS	MASS PER DETAIL "D"	NUMBER OF DETAIL "D"	
150	229	2.0		
180	254	2.1		
230	305	2.4		
1 - BACKING PL 100 x 9.5 x 390 = 3.1 kg				
1 - L 152 x 102 x 12.7 x 390 = 9.4 kg				

ONE C380 x 50 DIAPHRAGM

BEAM SPACING / WEB THICKNESS	1960		2000		2030		2150		2200	
	* LENGTH	UNIT MASS (kg)	* LENGTH	UNIT MASS (kg)	* LENGTH	UNIT MASS (kg)	* LENGTH	UNIT MASS (kg)	* LENGTH	UNIT MASS (kg)
150	1725	86.3	1765	88.3	1795	89.8	1915	95.8	1965	98.3
180	1695	84.8	1735	86.8	1765	88.3	1885	94.3	1935	96.8
230	1645	82.3	1685	84.3	1715	85.8	1835	91.8	1885	94.3

* THE LENGTH OF THE C380 x 50 SHOWN IN THE TABLE IS BASED ON A VARIABLE CLEARANCE OF 40 mm TO 55 mm BETWEEN THE FACE OF BEAM WEB AND END OF C380 x 50.

DIAPHRAGM MASS	
UNIT MASS	NUMBER OF DIAPHRAGMS
kg	
kg	

DIAPHRAGM CONNECTION BOLTS	
8 - 22.2 mmΦ x 70 H.S. BOLTS WITH NUTS AND WASHERS, PER UNIT DIAPHRAGM	NUMBER OF DIAPHRAGMS
4.7 kg	

INTERMEDIATE DIAPHRAGM STRUCTURAL STEEL - TOTAL (kg)	

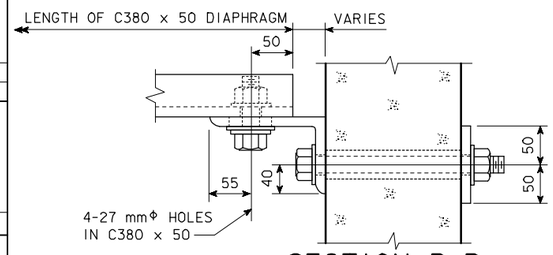

SECTION B-B

NOTES:

ALL DIAPHRAGM MATERIALS, INCLUDING BOLTS, NUTS AND WASHERS SHALL BE GALVANIZED.

SHOP DRAWINGS OF THE STEEL DIAPHRAGMS SHOWING LAYOUT AND DETAILS OF THE DIAPHRAGMS SHALL BE SUBMITTED FOR APPROVAL.

ALL COSTS FOR FURNISHING AND INSTALLING STEEL INTERMEDIATE DIAPHRAGMS SHALL BE INCLUDED IN THE PRICE BID FOR STRUCTURAL STEEL.

THE 38 mmΦ HOLES FOR THE 22.2 mmΦ H.S. BOLTS SHALL BE CAST INTO THE WEB. DRILLING IS NOT ALLOWED.

THE 22.2 mmΦ H.S. BOLTS THROUGH THE WEB SHALL HAVE A THREAD LENGTH OF 75 mm MIN. AND 100 mm MAX. AND SHALL MEET THE REQUIREMENTS OF ASTM A449.

ALL BOLTS ARE TO BE TIGHTENED PRIOR TO PLACING BRIDGE FLOOR CONCRETE WITH THE FOLLOWING EXCEPTION : BOLTS IN DIAPHRAGMS LOCATED UNDER LONGITUDINAL BRIDGE FLOOR CONSTRUCTION JOINTS SHALL NOT BE TIGHTENED UNTIL STAGE TWO OF THE BRIDGE FLOOR HAS BEEN PLACED.

IOWA DEPARTMENT OF TRANSPORTATION - HIGHWAY DIVISION

DESIGN SHEET NO. ____ OF ____ FILE NO. _____ DESIGN NO. _____

REVISED 07-04 - STUB ABUT. SEAL NOTE ADDED.
HM1036.SOI : THIS SHEET ISSUED 9-1-95.

DESIGN TEAM	STEEL INTERMEDIATE DIAPHRAGMS FOR PC BEAM BRIDGES	STANDARD SHEET M1036	COUNTY	PROJECT NUMBER	SHEET NUMBER

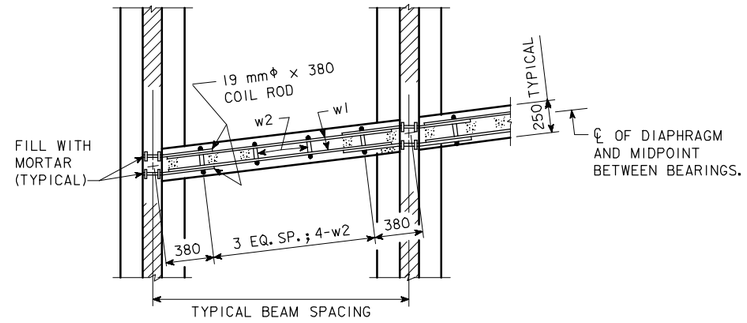

SECTION A-A

FOR BRIDGES SKEWED LESS THAN OR EQUAL TO 7°30′

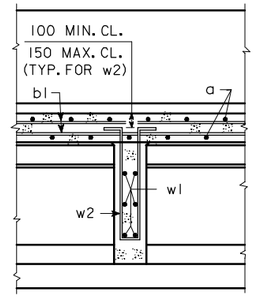

SECTION B-B

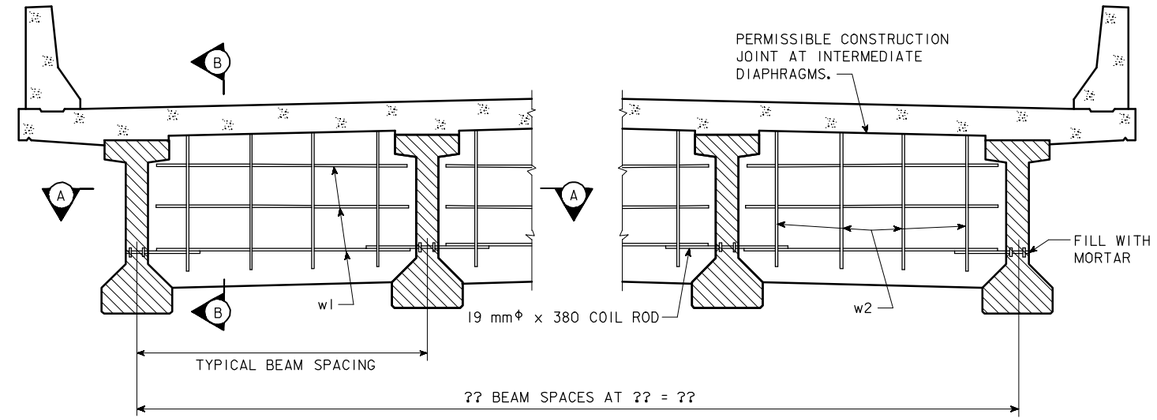

SECTION SHOWING INTERMEDIATE DIAPHRAGM

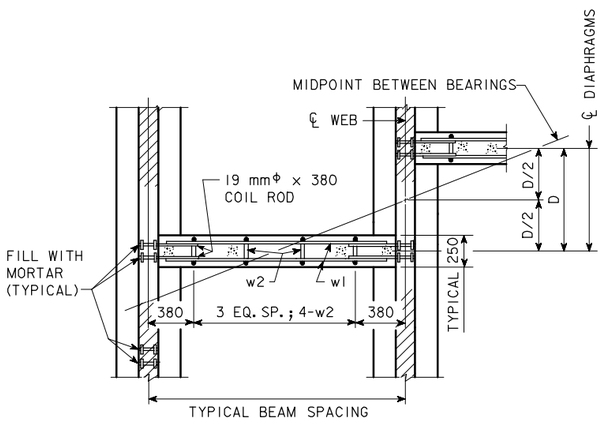

SECTION A-A

FOR BRIDGES SKEWED MORE THAN 7°30′

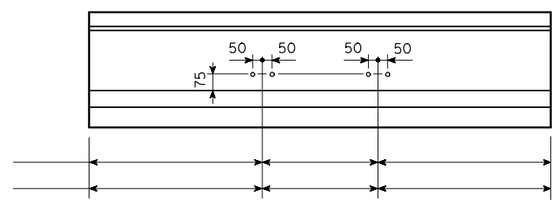

INTERMEDIATE DIAPHRAGM BEAM COIL TIE LOCATIONS

(7°31′ TO 30° SKEW)

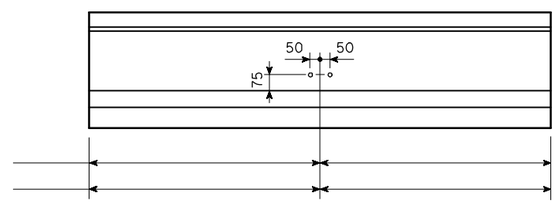

INTERMEDIATE DIAPHRAGM BEAM COIL TIE LOCATIONS

(0° TO 7°30′ SKEW)

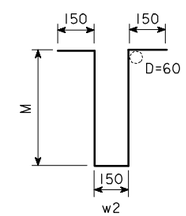

BENT BAR DETAIL

NOTE: ALL DIMENSIONS ARE OUT TO OUT. D=PIN DIAMETER.

BEAM SIZE	M	BAR LENGTH
A	580	1610
B	710	1870
C	840	2130
D	1040	2530

REINFORCING BAR LIST INTERMEDIATE DIAPHRAGMS

MARK	SIZE	LOCATION	SHAPE	NO.	LENGTH	MASS
w1	15	INTERMEDIATE DIAPH. LONGIT.	——			
w2	15	INTERMEDIATE DIAPH. HOOPS	⊔			
REINFORCING STEEL-TOTAL (kg.)						

CONCRETE PLACEMENT QUANTITIES INTERMEDIATE DIAPHRAGMS

QUANTITY	TOTAL
?? AT ?? m^3	m^3

NOTE:

MINIMUM CLEAR DISTANCE FROM FACE OF CONCRETE TO NEAR REINFORCING BAR IS TO BE 50 mm UNLESS OTHERWISE NOTED OR SHOWN.

ALL INTERMEDIATE DIAPHRAGM QUANTITIES FOR STRUCTURAL CONCRETE AND REINFORCING STEEL ARE INCLUDED IN THE SUPERSTRUCTURE QUANTITIES ON DESIGN SHEET ??.

AT LOCATIONS UNDER LONGITUDINAL BRIDGE FLOOR CONSTRUCTION JOINTS THE INTERMEDIATE CONCRETE DIAPHRAGM IS TO BE OMITTED.

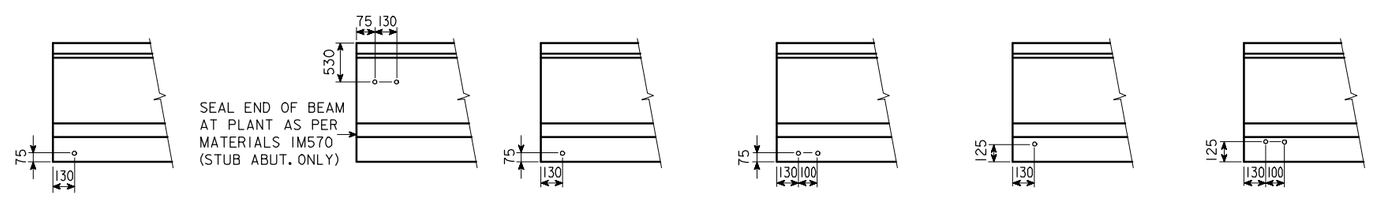

BEAM COIL TIE LOCATIONS AT ENDS OF BEAMS

IOWA DEPARTMENT OF TRANSPORTATION - HIGHWAY DIVISION

DESIGN SHEET NO. ____ OF ____ FILE NO. _____ DESIGN NO. _____

REVISED 07-04 - STUB ABUT. SEAL NOTE ADDED.
HM1036A.SOI : THIS SHEET ISSUED 9-1-95.

DESIGN TEAM	CONCRETE INTERMEDIATE DIAPHRAGMS FOR PC BEAM BRIDGES	STANDARD SHEET M1036A	COUNTY	PROJECT NUMBER	SHEET NUMBER

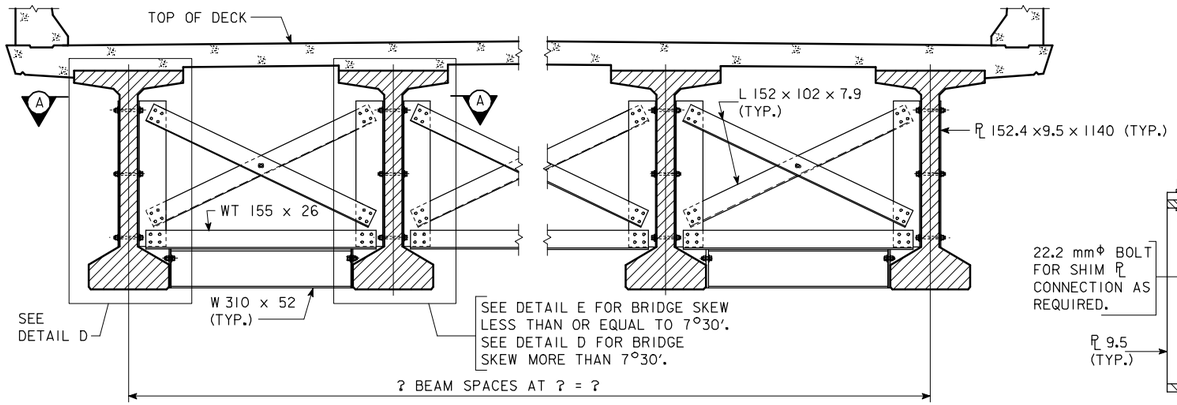

SECTION SHOWING INTERMEDIATE DIAPHRAGM

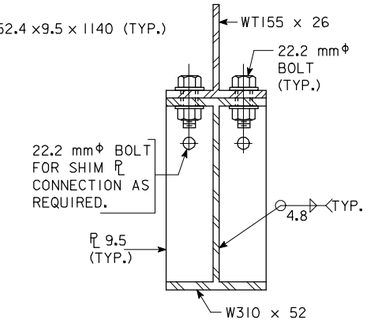

SECTION B-B

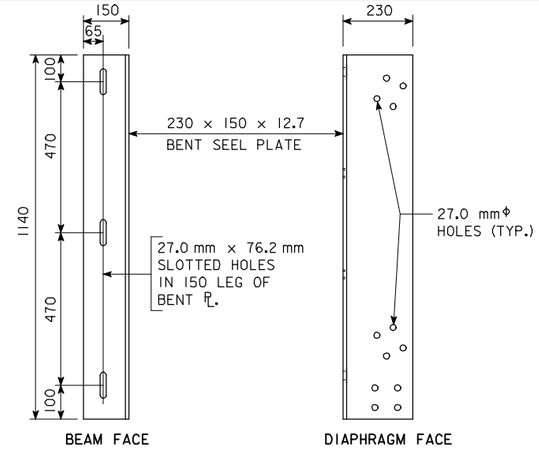

DIAPHRAGM SUPPORT

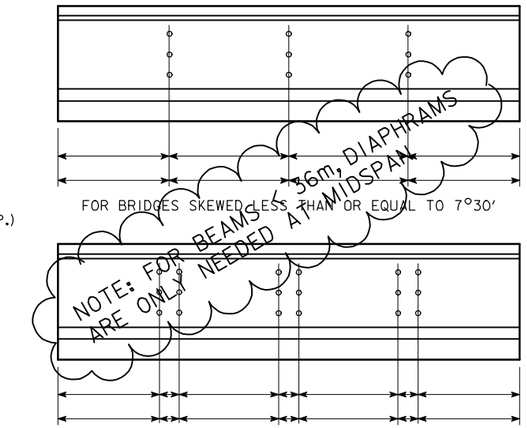

INTERMEDIATE DIAPHRAGM BOLT HOLE LOCATIONS

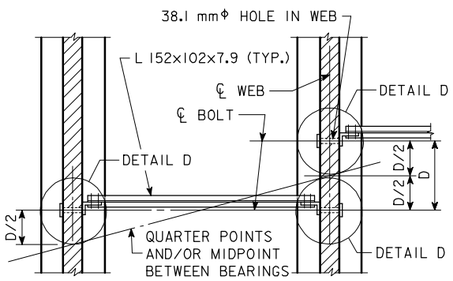

PART SECTION A-A

FOR BRIDGES SKEWED GREATER THAN 7°30'

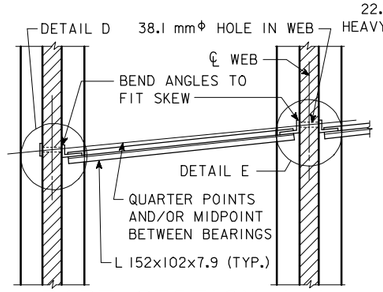

PART SECTION A-A

FOR BRIDGES SKEWED LESS THAN OR EQUAL TO 7°30'

NOTE: THE W 310 x 52 WILL REQUIRE BEVELED ENDS TO MATCH THE SKEW.

Δ BOLT HOLES SHALL BE SPACED TO MISS PRESTRESSED STRANDS IN CONCRETE BEAMS.

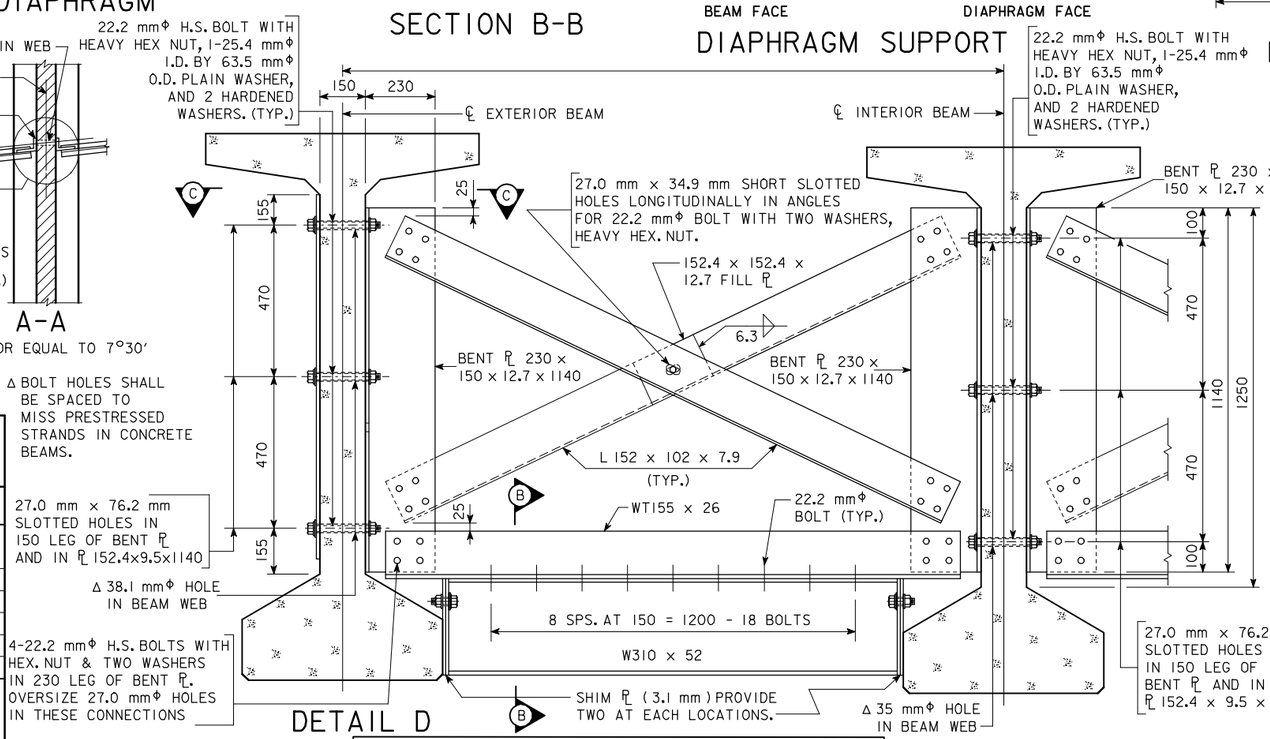

DETAIL D

DETAIL E

NOTE: W310 x 52 SHALL BE INSTALLED ONLY IN THE OUTSIDE BAYS OVER THE TRAVELED ROADWAY.

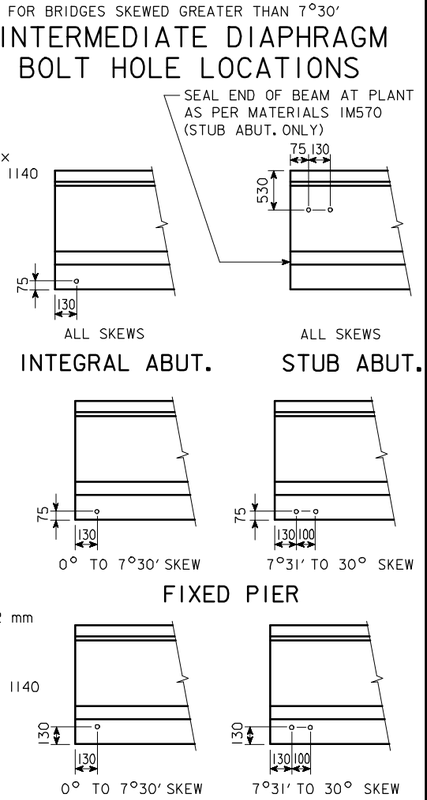

BEAM COIL TIE LOCATIONS

BULB TEE INTERMEDIATE DIAPHRAGM STRUCTURAL STEEL

ONE BEAM CONNECTION (DETAIL "D" AND/OR DETAIL "E")		NO. OF BEAM CONNECTIONS	MASS
3 - 22.2 mmΦ x 228 H.S. BOLTS WITH NUTS & WASHERS = 3.1 kg			
ONE DETAIL "E"	2 - BENT PL 230x150x12.7x1140 = 86.5 kg		
ONE DETAIL "D"	1 - BACKING PL 150x9.5x1140 = 12.8 kg		
	1 - BENT PL 230x150x12.7x1140 = 43.2 kg		
ONE DIAPHRAGM			
		NUMBER OF DIAPHRAGMS	
24 - 22.2 mmΦ x 57.2 H.S. BOLTS WITH NUTS & WASHERS = 11.3 kg			
1 - 22.2 mmΦ x 63.5 H.S. BOLTS WITH NUTS & WASHERS = 0.5 kg			
18 - 22.2 mmΦ x 63.5 H.S. BOLTS WITH NUTS & WASHERS = 8.3 kg			
4 - 22.2 mmΦ x 50.8 H.S. BOLTS WITH NUTS & WASHERS = 1.7 kg			
1 - FILL PL 152.4 x 152.4 x 12.7 = 1.0 kg			
2 - PL 167 x 318 x 9.5 = 7.9 kg			
4 - PL 167 x 318 x 3.1 = 5.2 kg			
	LENGTH OF MEMBER		
2 - L 152 x 102 x 7.9 - 15.3 kg/m PER "L"			
*1 - WT 155 x 26 = 26 kg/m			
1 - W 310 x 52 = 52 kg/m			
INTERMEDIATE DIAPHRAGM STRUCTURAL STEEL - TOTAL (kg)			

NOTE: IF SKEW IS >0° & <7°30' THE 167 mm WIDTH OF PL & SHIM PL AT ENDS OF W 310 x 52 WILL NEED TO BE INCREASED.

* THE LENGTH OF THE WT155 x 26 SHOWN IN THE TABLE IS BASED ON A VARIABLE CLEARANCE OF 40 mm TO 55 mm BETWEEN THE FACE OF BEAM WEB AND END OF WT155 x 26.

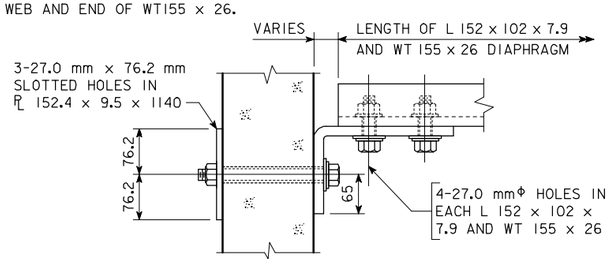

SECTION C-C

NOTES:

ALL DIAPHRAGM MATERIALS, INCLUDING BOLTS, NUTS AND WASHERS SHALL BE GALVANIZED.

SHOP DRAWINGS OF THE STEEL DIAPHRAGMS SHOWING LAYOUT AND DETAILS OF THE DIAPHRAGMS SHALL BE SUBMITTED FOR APPROVAL.

ALL COSTS FOR FURNISHING AND INSTALLING STEEL INTERMEDIATE DIAPHRAGMS SHALL BE INCLUDED IN THE PRICE BID FOR STRUCTURAL STEEL.

THE 38.1 mmΦ HOLES FOR THE 22.2 mmΦ H.S. BOLTS SHALL BE CAST INTO THE WEB. DRILLING IS NOT ALLOWED.

THE 22.2 mmΦ H.S. BOLTS THROUGH THE WEB SHALL HAVE A THREAD LENGTH OF 75 mm MIN. AND 100 mm MAX. AND SHALL MEET THE REQUIREMENTS OF ASTM A449.

ALL BOLTS ARE TO BE TIGHTENED PRIOR TO PLACING BRIDGE FLOOR CONCRETE WITH THE FOLLOWING EXCEPTION: BOLTS IN DIAPHRAGMS LOCATED UNDER LONGITUDINAL BRIDGE FLOOR CONSTRUCTION JOINTS SHALL NOT BE TIGHTENED UNTIL STAGE TWO OF THE BRIDGE FLOOR HAS BEEN PLACED.

IOWA DEPARTMENT OF TRANSPORTATION - HIGHWAY DIVISION
DESIGN SHEET NO. ____ OF ____ FILE NO. _____ DESIGN NO. _____

DESIGN TEAM	STEEL INTERMEDIATE DIAPHRAGMS FOR BULB TEE BEAM BRIDGES	STANDARD SHEET M1036BR	COUNTY	PROJECT NUMBER	SHEET NUMBER

REVISED 07-04 - STUB ABUT. SEAL NOTE ADDED. RENAMED SHEET TO HM1036BR.S01.
H1036BR.S01 - 03-01 THIS SHEET ISSUED.

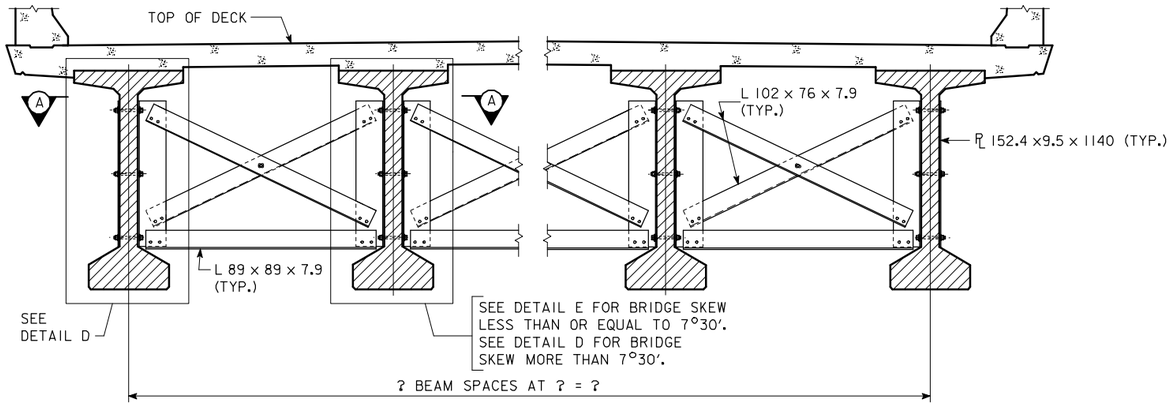

SECTION SHOWING INTERMEDIATE DIAPHRAGM

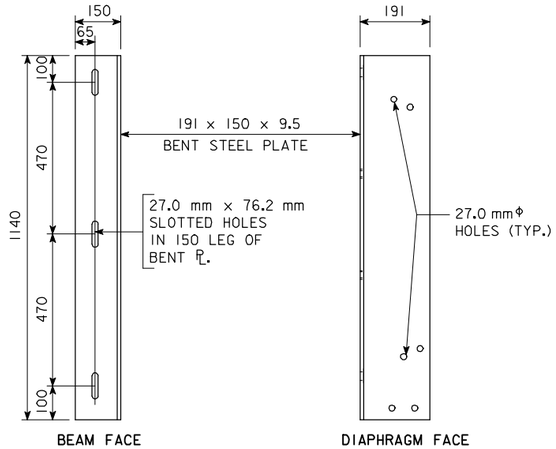

DIAPHRAGM SUPPORT

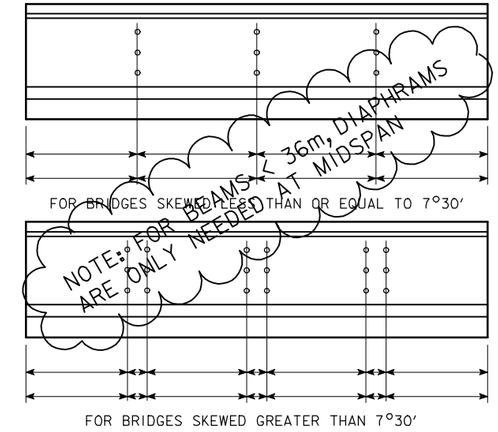

INTERMEDIATE DIAPHRAGM BOLT HOLE LOCATIONS

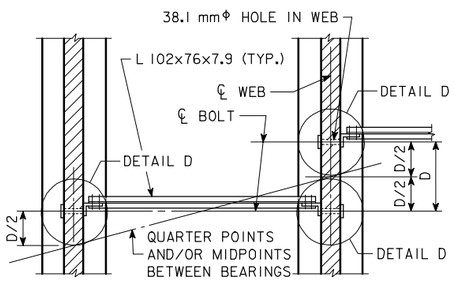

PART SECTION A-A

FOR BRIDGES SKEWED GREATER THAN 7°30'

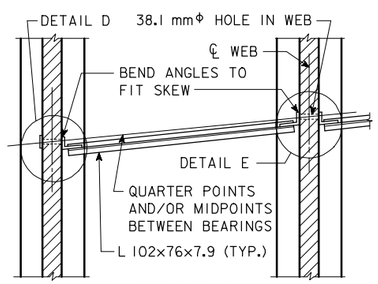

PART SECTION A-A

FOR BRIDGES SKEWED LESS THAN OR EQUAL TO 7°30'

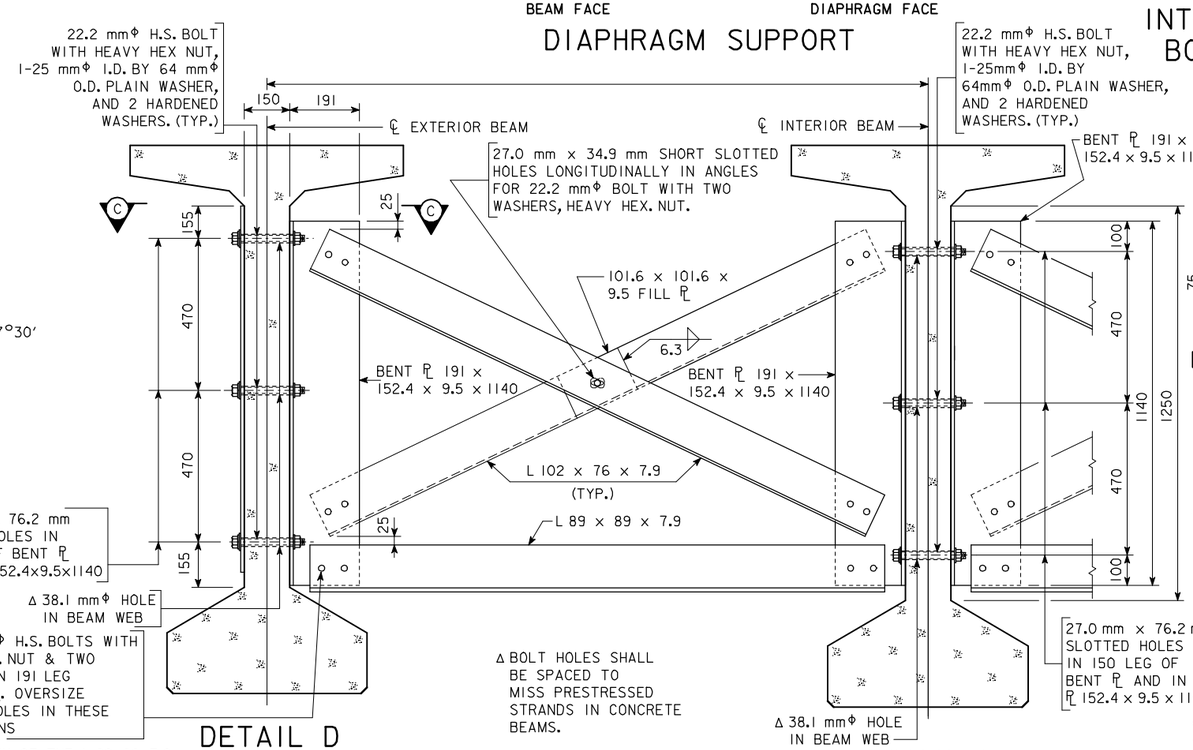

DETAIL D

DETAIL E

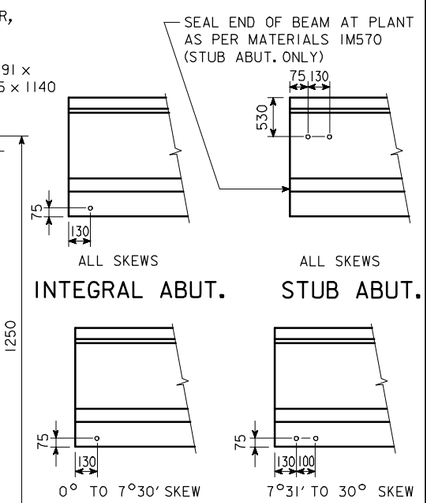

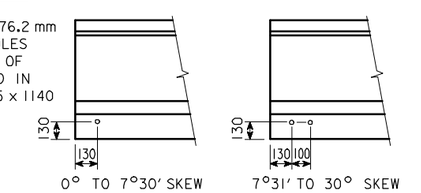

BEAM COIL TIE LOCATIONS

BULB TEE INTERMEDIATE DIAPHRAGM STRUCTURAL STEEL

ONE BEAM CONNECTION (DETAIL "D" AND/OR DETAIL "E")			MASS
		NO. OF BEAM CONNECTIONS	
3 - 22.2 mmΦ x 228 H.S.BOLTS WITH NUTS & WASHERS = 3.1 kg			
ONE DETAIL "E"	2 - BENT PL 191 x 150 x 9.5 x 1140 = 57.0 kg		
ONE DETAIL "D"	1 - BACKING PL 150 x 9.5 x 1140 = 12.9 kg		
	1 - BENT PL 191 x 150 x 9.5 x 1140 = 28.5 kg		
ONE DIAPHRAGM			
		NO. OF TOTAL DIAPHRAGMS	
12 - 22.2 mmΦ x 57.1 H.S.BOLTS WITH NUTS & WASHERS = 5.7 kg			
1 - 22.2 mmΦ x 63.5 H.S.BOLTS WITH NUTS & WASHERS = 0.5 kg			
1 - FILL PL 101.6 x 101.6 x 9.5 = 0.8 kg			
	LENGTH OF MEMBER		
2 - L 102 x 76 x 7.9 - 10.7 kg PER "L"			
*1 - L 89 x 89 x 7.9 = 10.7 kg/m			
INTERMEDIATE DIAPHRAGM STRUCTURAL STEEL - TOTAL (kg)			

* THE LENGTH OF THE L 89x89x7.9 AND L 102x76x7.9 SHOWN IN THE TABLE IS BASED ON A VARIABLE CLEARANCE OF 40 mm TO 55 mm BETWEEN THE FACE OF BEAM WEB AND END OF THE L 89x89x7.9 AND L 102x76x7.9.

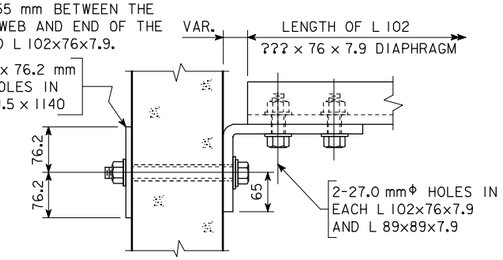

SECTION C-C

NOTES:

ALL DIAPHRAGM MATERIALS, INCLUDING BOLTS, NUTS AND WASHERS SHALL BE GALVANIZED.

SHOP DRAWINGS OF THE STEEL DIAPHRAGMS SHOWING LAYOUT AND DETAILS OF THE DIAPHRAGMS SHALL BE SUBMITTED FOR APPROVAL.

ALL COSTS FOR FURNISHING AND INSTALLING STEEL INTERMEDIATE DIAPHRAGMS SHALL BE INCLUDED IN THE PRICE BID FOR STRUCTURAL STEEL.

THE 38.1 mmΦ HOLES FOR THE 22.2 mmΦ H.S. BOLTS SHALL BE CAST INTO THE WEB. DRILLING IS NOT ALLOWED.

THE 22.2 mmΦ H.S. BOLTS THROUGH THE WEB SHALL HAVE A THREAD LENGTH OF 75 mm MIN. AND 100 mm MAX. AND SHALL MEET THE REQUIREMENTS OF ASTM A449.

ALL BOLTS ARE TO BE TIGHTENED PRIOR TO PLACING BRIDGE FLOOR CONCRETE WITH THE FOLLOWING EXCEPTION: BOLTS IN DIAPHRAGMS LOCATED UNDER LONGITUDINAL BRIDGE FLOOR CONSTRUCTION JOINTS SHALL NOT BE TIGHTENED UNTIL STAGE TWO OF THE BRIDGE FLOOR HAS BEEN PLACED.

IOWA DEPARTMENT OF TRANSPORTATION - HIGHWAY DIVISION

DESIGN SHEET NO. ____ OF ____ FILE NO. _____ DESIGN NO. _____

REVISED 07-04 - STUB ABUT. SEAL NOTE ADDED. RENAMED SHEET TO HM1036.BW.SOI.
H1036BW.SOI - 03-01 THIS SHEET ISSUED.

DESIGN TEAM	STEEL INTERMEDIATE DIAPHRAGMS FOR BULB TEE BEAM BRIDGES	STANDARD SHEET M1036BW	COUNTY	PROJECT NUMBER	SHEET NUMBER

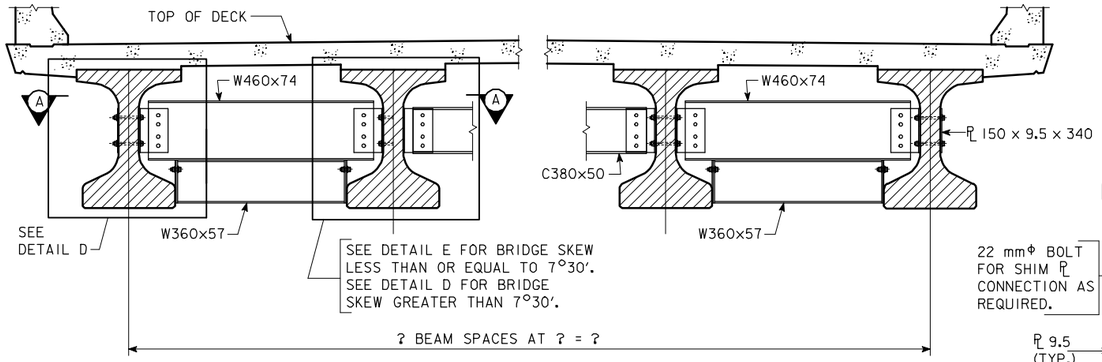

SECTION SHOWING INTERMEDIATE DIAPHRAGM

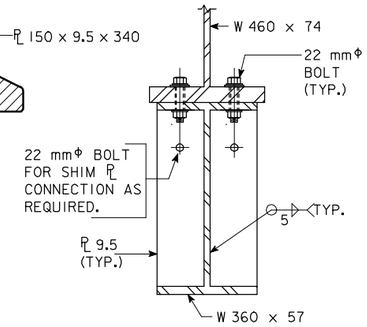

SECTION B-B

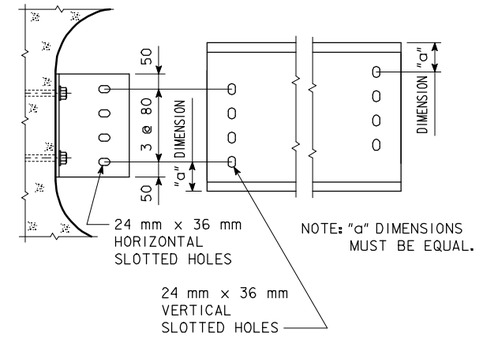

SLOTTED HOLE DETAILS

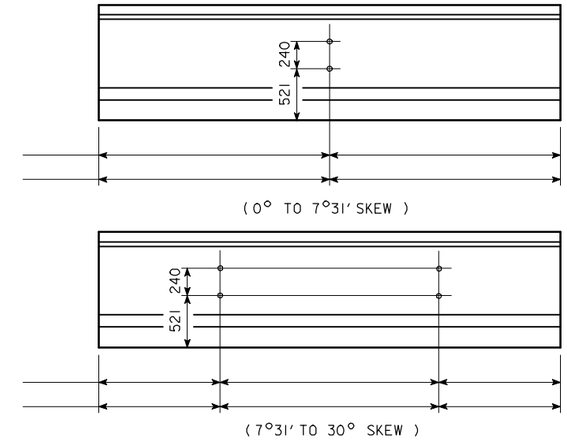

INTERMEDIATE DIAPHRAGM BOLT HOLE LOCATIONS

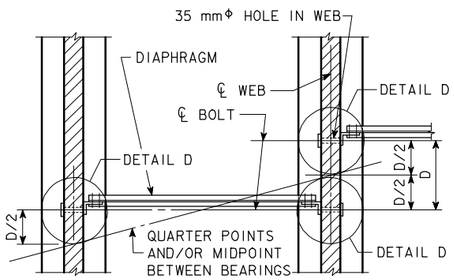

PART SECTION A-A

FOR BRIDGES SKEWED GREATER THAN 7°30'

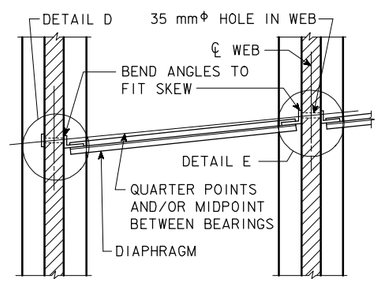

PART SECTION A-A

FOR BRIDGES SKEWED LESS THAN OR EQUAL TO 7°30'

NOTE: THE W 360 x 57 WILL REQUIRE BEVELED ENDS TO MATCH THE SKEW.

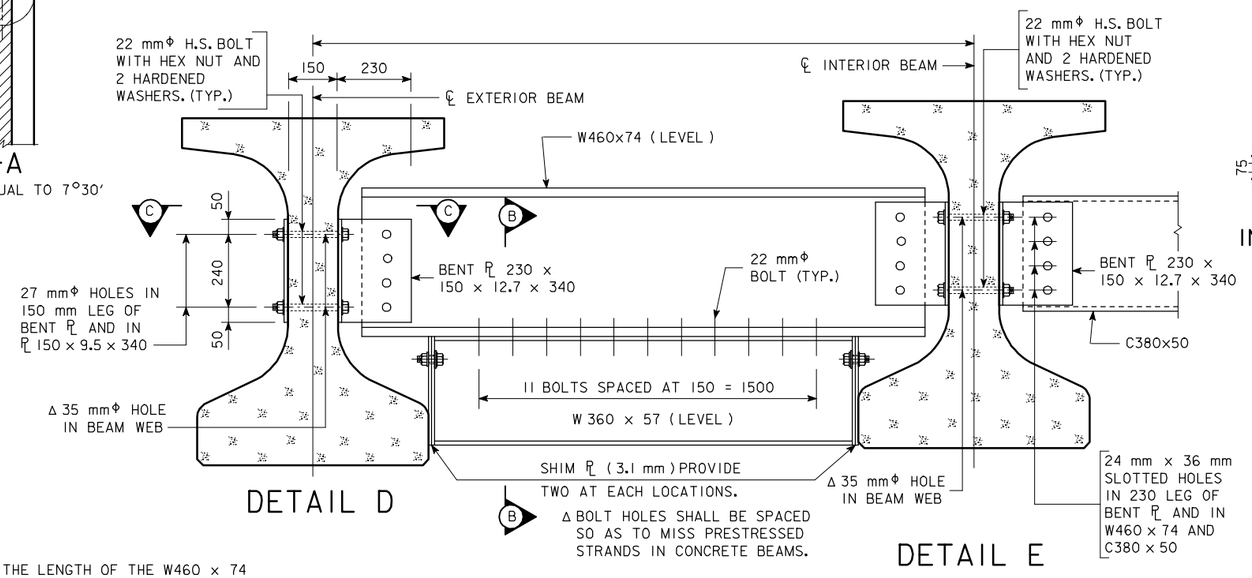

DETAIL D

DETAIL E

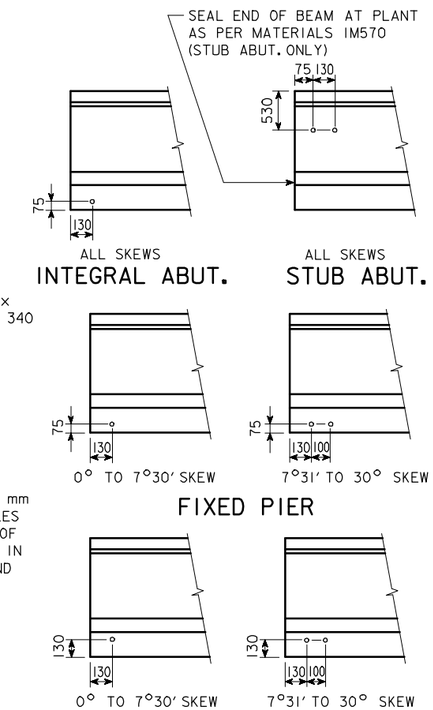

BEAM COIL TIE LOCATIONS

BULB TEE "C" BEAM INTERMEDIATE DIAPHRAGM STRUCTURAL STEEL

ONE BEAM CONNECTION (DETAIL "D" AND/OR DETAIL "E")		NO. OF BEAM CONNECTIONS	MASS
2 - 22 mmΦ x 228 H.S.BOLTS WITH NUTS & WASHERS = 1.5 kg			
ONE DETAIL "E"	2 - BENT PL 230x150x12.7x1200 = 87.8 kg		
ONE DETAIL "D"	1 - BACKING PL 150x9.5x1200 = 13.4 kg		
	1 - BENT PL 230x150x12.7x1200 = 43.9 kg		
ONE DIAPHRAGM		NUMBER OF DIAPHRAGMS	
8 - 22 mmΦ x 54 H.S.BOLTS WITH NUTS & WASHERS = 2.6 kg			
22 - 22 mmΦ x 60 H.S.BOLTS WITH NUTS & WASHERS = 7.0 kg			
4 - 22 mmΦ x 48 H.S.BOLTS WITH NUTS & WASHERS = 1.1 kg			
1 - FILL PL 101.6 x 101.6 x 12.7 = 1.0 kg			
2 - PL 167 x 318 x 9.5 = 7.9 kg			
4 - PL 167 x 318 x 3.1 = 5.2 kg			
	LENGTH OF MEMBER		
2 - L 230 x 150 x 12.7 = ??? kg/m			
*1 - W460 x 74 = 74 kg/m			
1 - C380 x 50 = 50 kg/m			
1 - W 360 x 57 = 57 kg/m			
INTERMEDIATE DIAPHRAGM STRUCTURAL STEEL - TOTAL (kg)			

NOTE: IF SKEW IS >70° & <7°30' THE 167 WIDTH OF PL & SHIM PL AT ENDS OF W 310 x 52 WILL NEED TO BE INCREASED.

* THE LENGTH OF THE W460 x 74 AND C380 x 50 SHOWN IN THE TABLE IS BASED ON A VARIABLE CLEARANCE OF 40 mm TO 55 mm BETWEEN THE FACE OF BEAM WEB AND END OF THE W460 x 74 AND C380 x 50.

NOTE: W460x74 AND W360x57 SHALL BE INSTALLED ONLY IN THE OUTSIDE BAYS OVER THE TRAVELED ROADWAY.

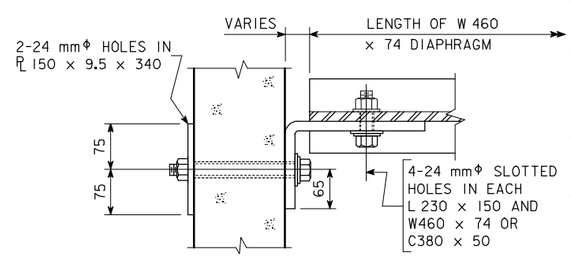

SECTION C-C

NOTES:

ALL DIAPHRAGM MATERIALS, INCLUDING BOLTS, NUTS AND WASHERS SHALL BE GALVANIZED.

SHOP DRAWINGS OF THE STEEL DIAPHRAGMS SHOWING LAYOUT AND DETAILS OF THE DIAPHRAGMS SHALL BE SUBMITTED FOR APPROVAL.

ALL COSTS FOR FURNISHING AND INSTALLING STEEL INTERMEDIATE DIAPHRAGMS SHALL BE INCLUDED IN THE PRICE BID FOR STRUCTURAL STEEL.

THE 35 mmΦ HOLES FOR THE 22 mmΦ H.S. BOLTS SHALL BE CAST INTO THE WEB. DRILLING IS NOT ALLOWED.

THE 22 mmΦ H.S. BOLTS THROUGH THE WEB SHALL HAVE A THREAD LENGTH OF 75 mm MIN. AND 100 mm MAX. AND SHALL MEET THE REQUIREMENTS OF ASTM A449.

ALL BOLTS ARE TO BE TIGHTENED PRIOR TO PLACING BRIDGE FLOOR CONCRETE WITH THE FOLLOWING EXCEPTION: BOLTS IN DIAPHRAGMS LOCATED UNDER LONGITUDINAL BRIDGE FLOOR CONSTRUCTION JOINTS SHALL NOT BE TIGHTENED UNTIL STAGE TWO OF THE BRIDGE FLOOR HAS BEEN PLACED.

IOWA DEPARTMENT OF TRANSPORTATION - HIGHWAY DIVISION

DESIGN SHEET NO. ____ OF ____ FILE NO. _____ DESIGN NO. _____

HM1036CR - THIS SHEET ISSUED 07-04.

DESIGN TEAM	STEEL INTERM. DIAPHS. FOR BULB TEE "C" BEAM BRIDGES OVER TRAVELED ROADWAYS	STANDARD SHEET M1036CR	COUNTY	PROJECT NUMBER	SHEET NUMBER

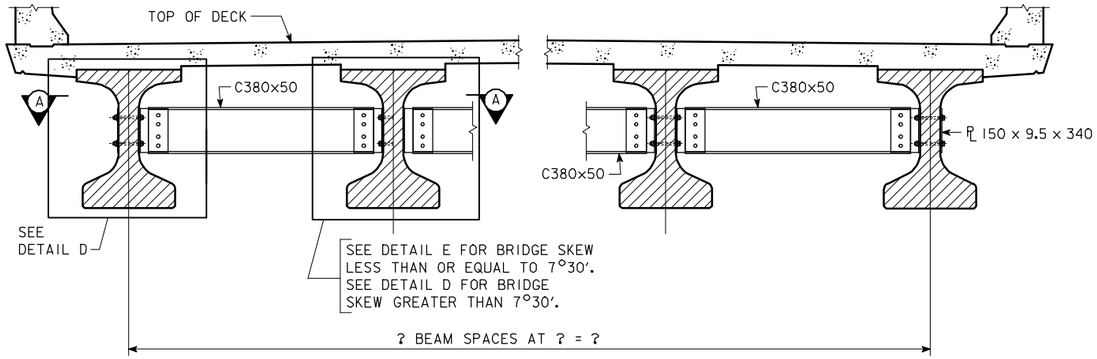

SECTION SHOWING INTERMEDIATE DIAPHRAGM

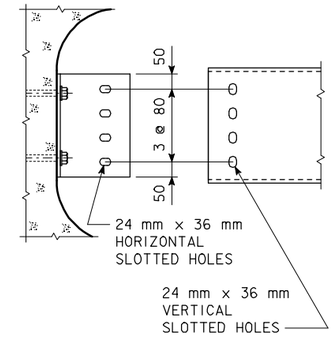

SLOTTED HOLE DETAILS

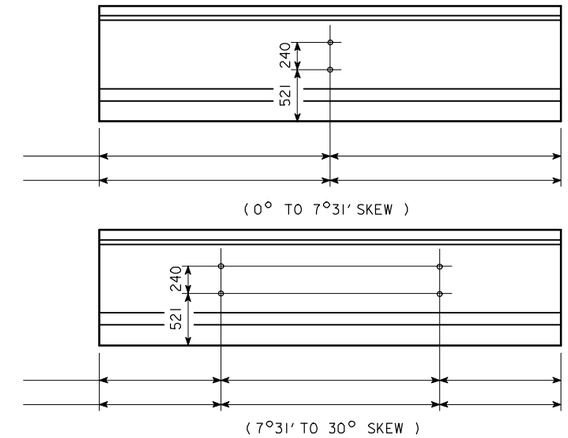

INTERMEDIATE DIAPHRAGM BOLT HOLE LOCATIONS

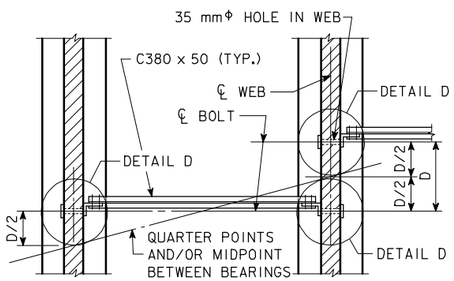

PART SECTION A-A

FOR BRIDGES SKEWED GREATER THAN 7°30'

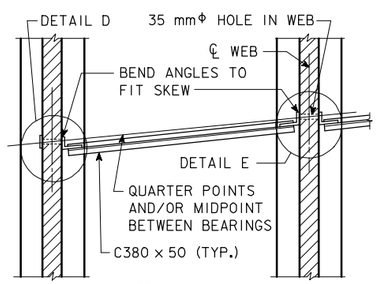

PART SECTION A-A

FOR BRIDGES SKEWED LESS THAN OR EQUAL TO 7°30'

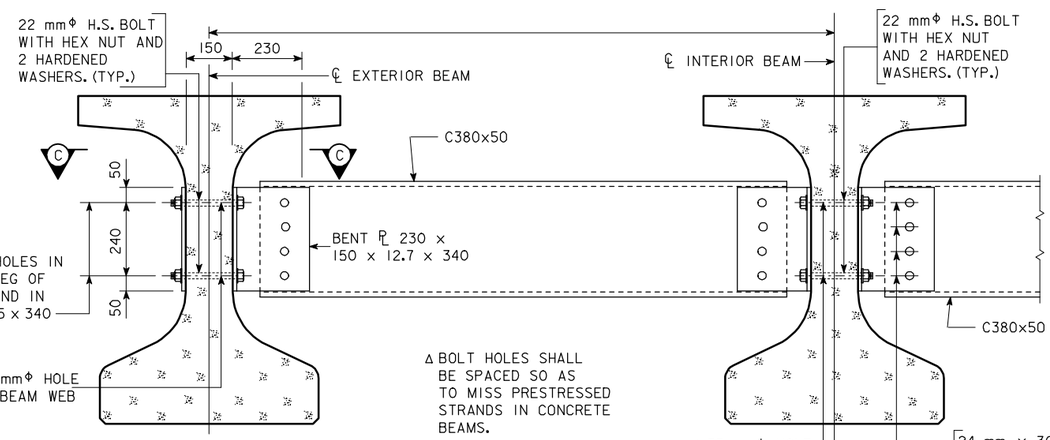

Δ BOLT HOLES SHALL BE SPACED SO AS TO MISS PRESTRESSED STRANDS IN CONCRETE BEAMS.

DETAIL D

DETAIL E

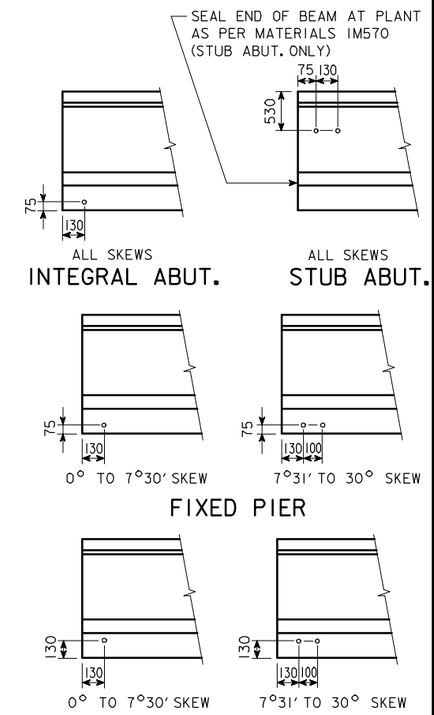

BEAM COIL TIE LOCATIONS

BULB TEE "C" BEAM INTERMEDIATE DIAPHRAGM STRUCTURAL STEEL

ONE BEAM CONNECTION (DETAIL "D" AND/OR DETAIL "E")			MASS
		NO. OF BEAM CONNECTIONS	
2 - 22 mmΦ x 228 H.S.BOLTS WITH NUTS & WASHERS = 1.5 kg			
ONE DETAIL "E"	2 - BENT PL 230x150x12.7x1200 = 87.8 kg		
ONE DETAIL "D"	1 - BACKING PL 150x9.5x1200 = 13.4 kg		
	1 - BENT PL 230x150x12.7x1200 = 43.9 kg		
ONE DIAPHRAGM			
		NUMBER OF DIAPHRAGMS	
8 - 22 mmΦ x 54 H.S.BOLTS WITH NUTS & WASHERS = 2.6 kg			
22 - 22 mmΦ x 60 H.S.BOLTS WITH NUTS & WASHERS = 7.0 kg			
4 - 22 mmΦ x 48 H.S.BOLTS WITH NUTS & WASHERS = 1.1 kg			
1 - FILL PL 101.6 x 101.6 x 12.7 = 1.0 kg			
2 - PL 167 x 318 x 9.5 = 7.9 kg			
4 - PL 167 x 318 x 3.1 = 5.2 kg			
	LENGTH OF MEMBER		
2 - L 230 x 150 x 12.7 = ??? kg/m			
1 - C380 x 50 = 50 kg/m			
INTERMEDIATE DIAPHRAGM STRUCTURAL STEEL - TOTAL (kg)			

* THE LENGTH OF THE C380 x 50 SHOWN IN THE TABLE IS BASED ON A VARIABLE CLEARANCE OF 40 mm TO 55 mm BETWEEN THE FACE OF BEAM WEB AND END OF THE C380 x 50.

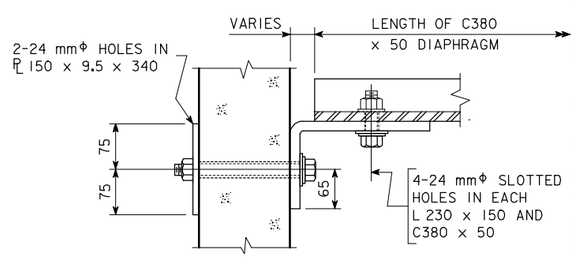

SECTION C-C

NOTES:

ALL DIAPHRAGM MATERIALS, INCLUDING BOLTS, NUTS AND WASHERS SHALL BE GALVANIZED.

SHOP DRAWINGS OF THE STEEL DIAPHRAGMS SHOWING LAYOUT AND DETAILS OF THE DIAPHRAGMS SHALL BE SUBMITTED FOR APPROVAL.

ALL COSTS FOR FURNISHING AND INSTALLING STEEL INTERMEDIATE DIAPHRAGMS SHALL BE INCLUDED IN THE PRICE BID FOR STRUCTURAL STEEL.

THE 35 mmΦ HOLES FOR THE 22 mmΦ H.S. BOLTS SHALL BE CAST INTO THE WEB. DRILLING IS NOT ALLOWED.

THE 22 mmΦ H.S. BOLTS THROUGH THE WEB SHALL HAVE A THREAD LENGTH OF 75 mm MIN. AND 100 mm MAX. AND SHALL MEET THE REQUIREMENTS OF ASTM A449.

ALL BOLTS ARE TO BE TIGHTENED PRIOR TO PLACING BRIDGE FLOOR CONCRETE WITH THE FOLLOWING EXCEPTION: BOLTS IN DIAPHRAGMS LOCATED UNDER LONGITUDINAL BRIDGE FLOOR CONSTRUCTION JOINTS SHALL NOT BE TIGHTENED UNTIL STAGE TWO OF THE BRIDGE FLOOR HAS BEEN PLACED.

IOWA DEPARTMENT OF TRANSPORTATION - HIGHWAY DIVISION

DESIGN SHEET NO. ____ OF ____ FILE NO. _____ DESIGN NO. _____

HM1036CW - THIS SHEET ISSUED 07-04.

DESIGN TEAM	STEEL INTERM. DIAPHS. FOR BULB TEE "C" BEAM BRIDGES OVER WATERWAYS	STANDARD SHEET M1036CW	COUNTY	PROJECT NUMBER	SHEET NUMBER

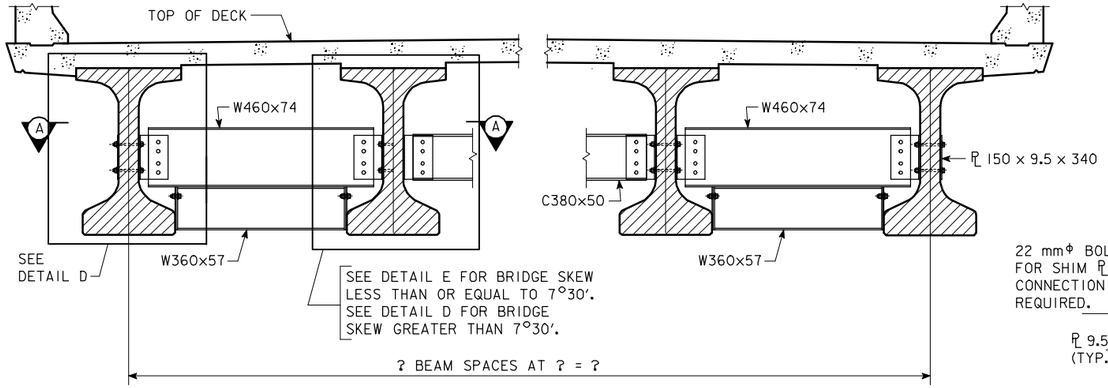

SECTION SHOWING INTERMEDIATE DIAPHRAGM

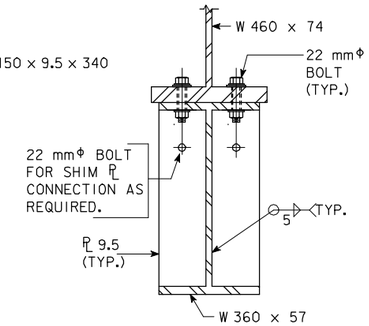

SECTION B-B

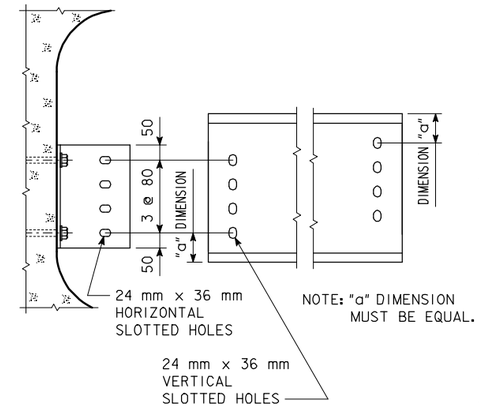

SLOTTED HOLE DETAILS

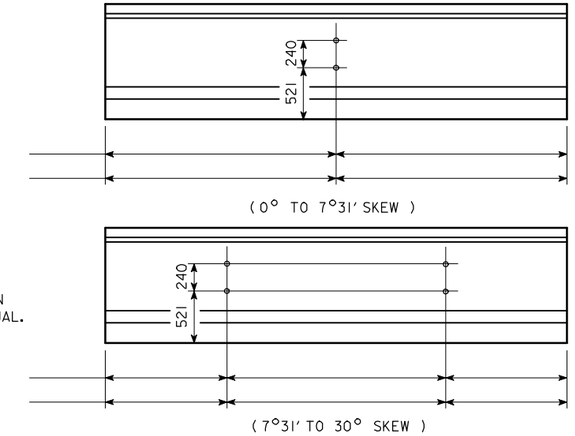

INTERMEDIATE DIAPHRAGM BOLT HOLE LOCATIONS

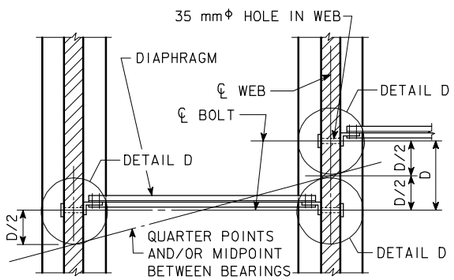

PART SECTION A-A

FOR BRIDGES SKEWED GREATER THAN 7°30'

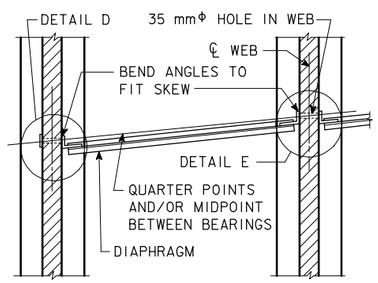

PART SECTION A-A

FOR BRIDGES SKEWED LESS THAN OR EQUAL TO 7°30'

NOTE: THE W 360 x 57 WILL REQUIRE BEVELED ENDS TO MATCH THE SKEW.

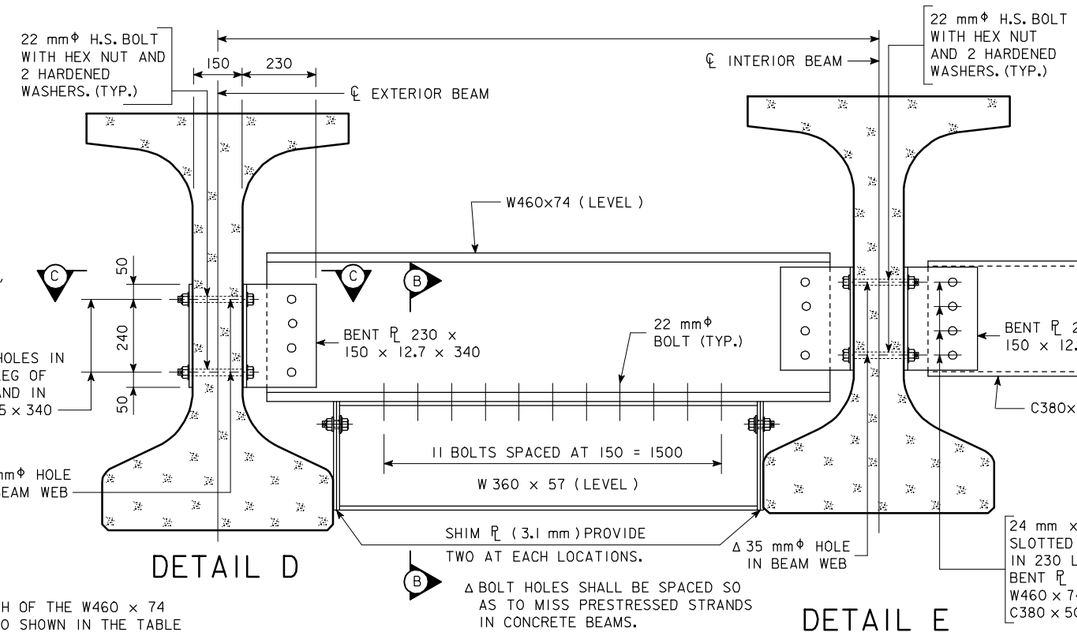

DETAIL D

DETAIL E

* THE LENGTH OF THE W460 x 74 AND C380 x 50 SHOWN IN THE TABLE IS BASED ON A VARIABLE CLEARANCE OF 40 mm TO 55 mm BETWEEN THE FACE OF BEAM WEB AND END OF THE W460 x 74 AND C380 x 50.

NOTE: W460x74 AND W360x57 SHALL BE INSTALLED ONLY IN THE OUTSIDE BAYS OVER THE TRAVELED ROADWAY.

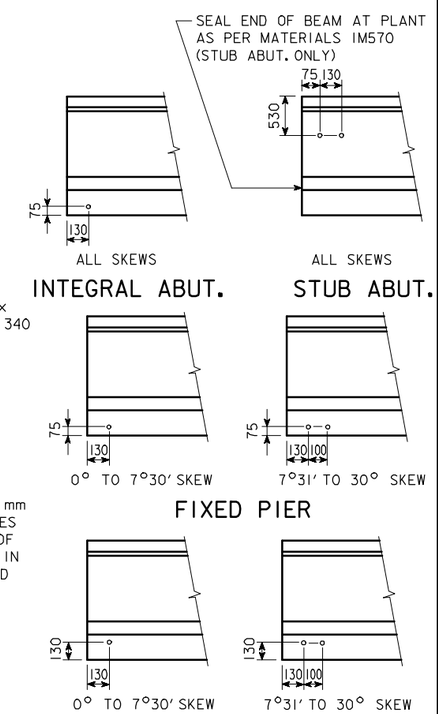

BEAM COIL TIE LOCATIONS

BULB TEE "D" BEAM INTERMEDIATE DIAPHRAGM STRUCTURAL STEEL

ONE BEAM CONNECTION (DETAIL "D" AND/OR DETAIL "E")		NO. OF BEAM CONNECTIONS	MASS
2 - 22 mmΦ x 228 H.S.BOLTS WITH NUTS & WASHERS = 1.5 kg			
ONE DETAIL "E"	2 - BENT PL 230x150x12.7x1200 = 87.8 kg		
ONE DETAIL "D"	1 - BACKING PL 150x9.5x1200 = 13.4 kg		
	1 - BENT PL 230x150x12.7x1200 = 43.9 kg		
ONE DIAPHRAGM			
		NUMBER OF DIAPHRAGMS	
8 - 22 mmΦ x 54 H.S.BOLTS WITH NUTS & WASHERS = 2.6 kg			
22 - 22 mmΦ x 60 H.S.BOLTS WITH NUTS & WASHERS = 7.0 kg			
4 - 22 mmΦ x 48 H.S.BOLTS WITH NUTS & WASHERS = 1.1 kg			
1 - FILL PL 101.6 x 101.6 x 12.7 = 1.0 kg			
2 - PL 167 x 318 x 9.5 = 7.9 kg			
4 - PL 167 x 318 x 3.1 = 5.2 kg			
	LENGTH OF MEMBER		
2 - L 230 x 150 x 12.7 = ??? kg/m			
*1 - W460 x 74 = 74 kg/m			
1 - C380 x 50 = 50 kg/m			
1 - W360 x 57 = 57 kg/m			
INTERMEDIATE DIAPHRAGM STRUCTURAL STEEL - TOTAL (kg)			

NOTE: IF SKEW IS >0° & <7°30' THE 167 mm WIDTH OF PL & SHIM PL AT ENDS OF W 310 x 52 WILL NEED TO BE INCREASED.

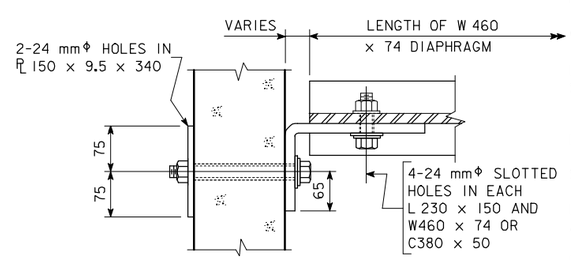

SECTION C-C

NOTES:

ALL DIAPHRAGM MATERIALS, INCLUDING BOLTS, NUTS AND WASHERS SHALL BE GALVANIZED.

SHOP DRAWINGS OF THE STEEL DIAPHRAGMS SHOWING LAYOUT AND DETAILS OF THE DIAPHRAGMS SHALL BE SUBMITTED FOR APPROVAL.

ALL COSTS FOR FURNISHING AND INSTALLING STEEL INTERMEDIATE DIAPHRAGMS SHALL BE INCLUDED IN THE PRICE BID FOR STRUCTURAL STEEL.

THE 35 mmΦ HOLES FOR THE 22 mmΦ H.S. BOLTS SHALL BE CAST INTO THE WEB. DRILLING IS NOT ALLOWED.

THE 22 mmΦ H.S. BOLTS THROUGH THE WEB SHALL HAVE A THREAD LENGTH OF 75 mm MIN. AND 100 mm MAX. AND SHALL MEET THE REQUIREMENTS OF ASTM A449.

ALL BOLTS ARE TO BE TIGHTENED PRIOR TO PLACING BRIDGE FLOOR CONCRETE WITH THE FOLLOWING EXCEPTION: BOLTS IN DIAPHRAGMS LOCATED UNDER LONGITUDINAL BRIDGE FLOOR CONSTRUCTION JOINTS SHALL NOT BE TIGHTENED UNTIL STAGE TWO OF THE BRIDGE FLOOR HAS BEEN PLACED.

IOWA DEPARTMENT OF TRANSPORTATION - HIGHWAY DIVISION

DESIGN SHEET NO. ____ OF ____ FILE NO. _____ DESIGN NO. _____

HM1036DR - THIS SHEET ISSUED 07-04

DESIGN TEAM	STEEL INTERM. DIAPHS. FOR BULB TEE "D" BEAM BRIDGES OVER TRAVELED ROADWAYS	STANDARD SHEET M1036DR	COUNTY	PROJECT NUMBER	SHEET NUMBER

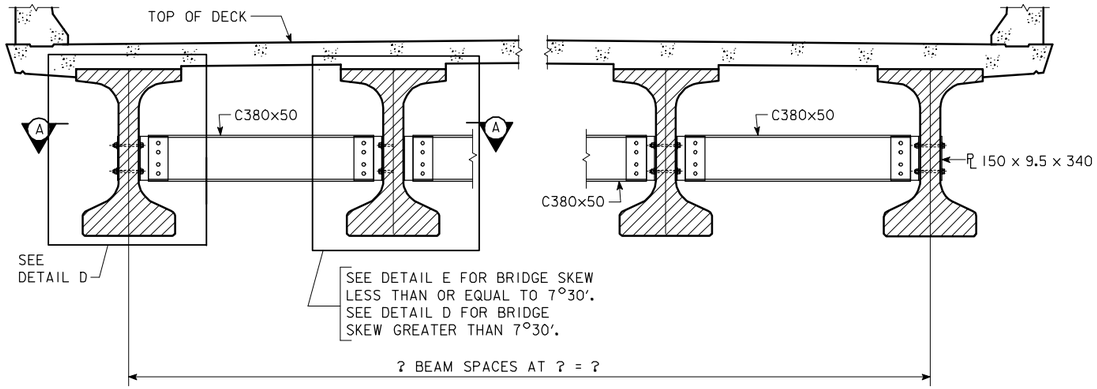

SECTION SHOWING INTERMEDIATE DIAPHRAGM

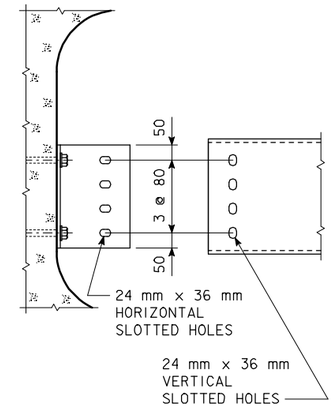

SLOTTED HOLE DETAILS

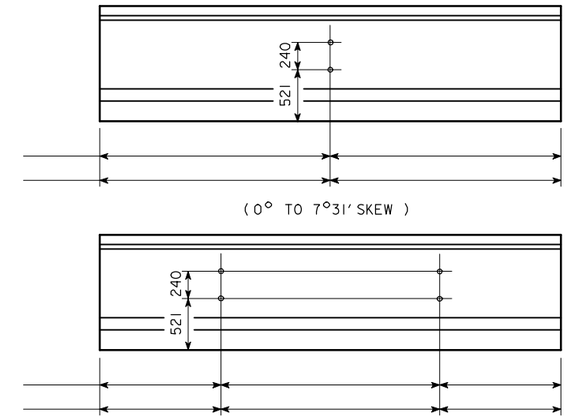

INTERMEDIATE DIAPHRAGM BOLT HOLE LOCATIONS

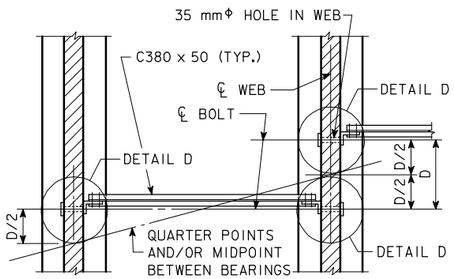

PART SECTION A-A

FOR BRIDGES SKEWED GREATER THAN 7°30′

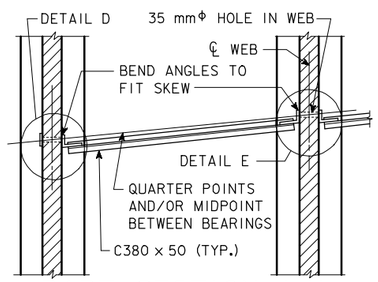

PART SECTION A-A

FOR BRIDGES SKEWED LESS THAN OR EQUAL TO 7°30′

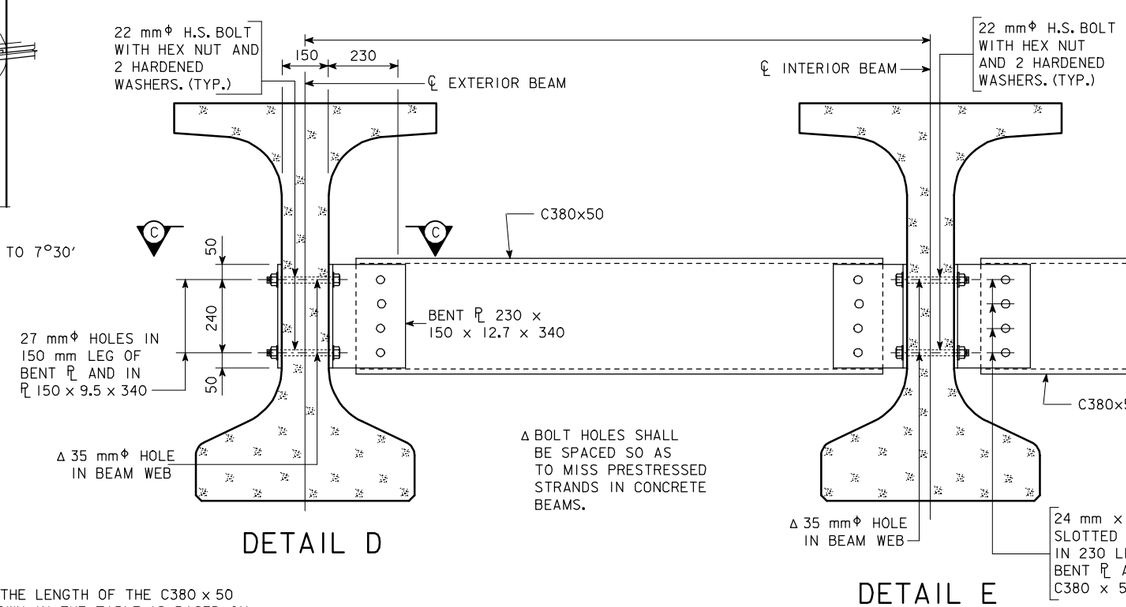

DETAIL D

DETAIL E

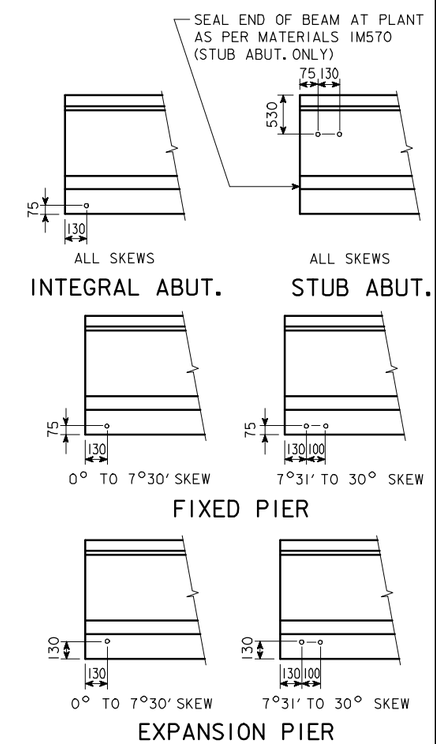

BEAM COIL TIE LOCATIONS

BULB TEE "D" BEAM INTERMEDIATE DIAPHRAGM STRUCTURAL STEEL

ONE BEAM CONNECTION (DETAIL "D" AND/OR DETAIL "E")		NO. OF BEAM CONNECTIONS	MASS
2 - 22 mmΦ x 228 H.S.BOLTS WITH NUTS & WASHERS = 1.5 kg			
ONE DETAIL "E"	2 - BENT ℄ 230x150x12.7x1200 = 87.8 kg		
ONE DETAIL "D"	1 - BACKING ℄ 150x9.5x1200 = 13.4 kg		
	1 - BENT ℄ 230x150x12.7x1200 = 43.9 kg		
ONE DIAPHRAGM		NUMBER OF DIAPHRAGMS	
8 - 22 mmΦ x 54 H.S.BOLTS WITH NUTS & WASHERS = 2.6 kg			
22 - 22 mmΦ x 60 H.S.BOLTS WITH NUTS & WASHERS = 7.0 kg			
4 - 22 mmΦ x 48 H.S.BOLTS WITH NUTS & WASHERS = 1.1 kg			
1 - FILL ℄ 101.6 x 101.6 x 12.7 = 1.0 kg			
2 - ℄ 167 x 318 x 9.5 = 7.9 kg			
4 - ℄ 167 x 318 x 3.1 = 5.2 kg			
	LENGTH OF MEMBER		
2 - L 230 x 150 x 12.7 = ??? kg/m			
1 - C380 x 50 = 50 kg/m			
INTERMEDIATE DIAPHRAGM STRUCTURAL STEEL - TOTAL (kg)			

* THE LENGTH OF THE C380 x 50 SHOWN IN THE TABLE IS BASED ON A VARIABLE CLEARANCE OF 40 mm TO 55 mm BETWEEN THE FACE OF BEAM WEB AND END OF THE C380 x 50.

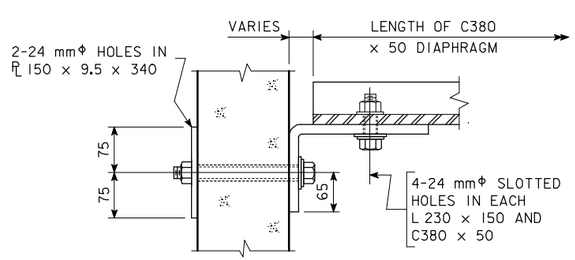

SECTION C-C

NOTES:

ALL DIAPHRAGM MATERIALS, INCLUDING BOLTS, NUTS AND WASHERS SHALL BE GALVANIZED.

SHOP DRAWINGS OF THE STEEL DIAPHRAGMS SHOWING LAYOUT AND DETAILS OF THE DIAPHRAGMS SHALL BE SUBMITTED FOR APPROVAL.

ALL COSTS FOR FURNISHING AND INSTALLING STEEL INTERMEDIATE DIAPHRAGMS SHALL BE INCLUDED IN THE PRICE BID FOR STRUCTURAL STEEL.

THE 35 mmΦ HOLES FOR THE 22 mmΦ H.S. BOLTS SHALL BE CAST INTO THE WEB. DRILLING IS NOT ALLOWED.

THE 22 mmΦ H.S. BOLTS THROUGH THE WEB SHALL HAVE A THREAD LENGTH OF 75 mm MIN. AND 100 mm MAX. AND SHALL MEET THE REQUIREMENTS OF ASTM A449.

ALL BOLTS ARE TO BE TIGHTENED PRIOR TO PLACING BRIDGE FLOOR CONCRETE WITH THE FOLLOWING EXCEPTION: BOLTS IN DIAPHRAGMS LOCATED UNDER LONGITUDINAL BRIDGE FLOOR CONSTRUCTION JOINTS SHALL NOT BE TIGHTENED UNTIL STAGE TWO OF THE BRIDGE FLOOR HAS BEEN PLACED.

IOWA DEPARTMENT OF TRANSPORTATION - HIGHWAY DIVISION

DESIGN SHEET NO. ____ OF ____ FILE NO. _____ DESIGN NO. _____

HM1036DW - THIS SHEET ISSUED 07-04

DESIGN TEAM	STEEL INTERM. DIAPHS. FOR BULB TEE "D" BEAM BRIDGES OVER WATERWAYS	STANDARD SHEET M1036DW	COUNTY	PROJECT NUMBER	SHEET NUMBER

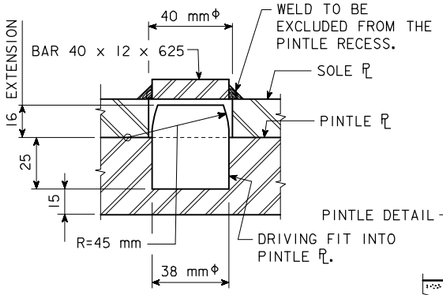

PINTLE DETAIL

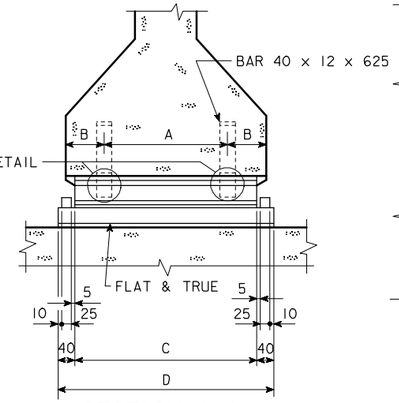

SECTION A-A

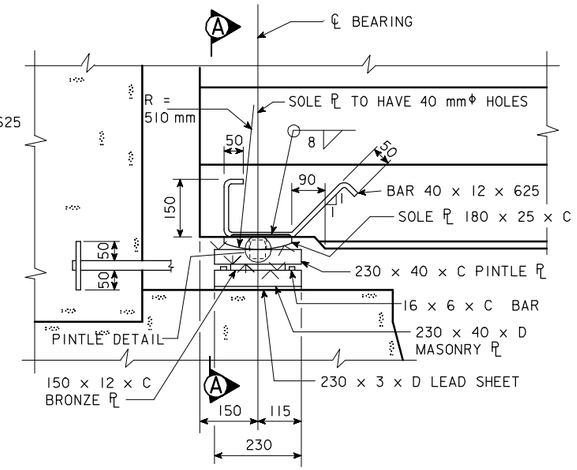

PART ELEVATION

ABUTMENT BEARING NOTES:

BRONZE PL SHALL BE LUBRICATED IN ACCORDANCE WITH IOWA D.O.T. METRIC STANDARD SPECIFICATIONS ARTICLE 4190.03 (SLIDING SURFACE ONLY) AND THE BRONZE METAL SHALL BE CAST BRONZE MEETING THE REQUIREMENTS OF ARTICLE 4190.03. TOP EDGES OF BRONZE PL SHALL BE BEVELED 3 mm.

SURFACES MARKED "V" SHALL BE FINISHED 6 μm AND SURFACES MARKED "V" SHALL BE FINISHED 3 μm.

MASONRY PLATES ARE TO BE SET ON A 3 mm LEAD SHEET.

PINTLE PLATES, MASONRY PLATES, LUBRICATED BRONZE PLATES AND LEAD SHEETS ARE A PART OF THE SUPERSTRUCTURE STRUCTURAL STEEL QUANTITY. UNIT PRICE BID FOR "STRUCTURAL STEEL" SHALL INCLUDE ALLOWANCE FOR COST OF BRONZE PLATES AND LEAD SHEETS. COST OF THE ANCHORED CURVED SOLE PLATES IS TO BE INCLUDED IN THE PRICE BID FOR " PRETENSIONED PRESTRESSED CONCRETE BEAMS ".

THE SOLE PLATE, PINTLE PLATE AND THE MASONRY PLATE SHALL BE GALVANIZED. THE SOLE PLATE AND MASONRY PLATE SHALL BE FITTED UP AND WELDED PRIOR TO GALVANIZING. THE SURFACE OF PINTLE PLATE IN CONTACT WITH BRONZE BEARING PLATE SHALL BE SMOOTH AND FREE OF PROJECTIONS DUE TO GALVANIZING.

SOLE PLATES ARE TO BE SET IN FORMS WHEN BEAMS ARE CAST AND THE BOTTOM OF BEAMS FORMED OUT AS SHOWN TO EXCLUDE CONCRETE.

SOLE PLATES SHALL COMPLY WITH ONE OF THE FOLLOWING SPECIFICATIONS :

- ASTM A 852M
- ASTM A 514M GRADE B
- ASTM A 709M GRADE HPS 485W

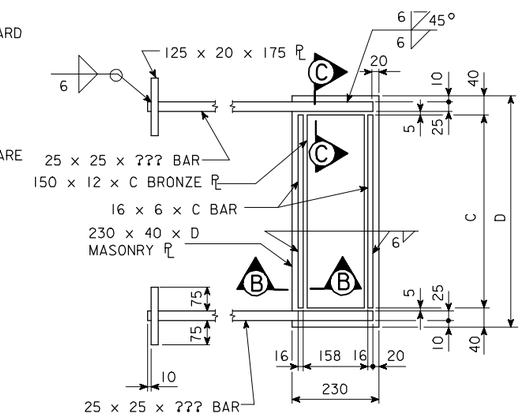

PLAN OF MASONRY PL AND BRONZE PL

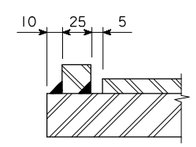

SECTION C-C

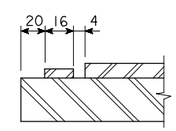

SECTION B-B

PRETENSIONED PRESTRESSED CONCRETE BEAM ABUTMENT BEARING DETAILS

VARIABLE DIMENSIONS			
	BEAM BOTTOM FLANGE WIDTH		
	430	510	560
A	150	300	300
B	140	105	130
C	390	470	520
D	470	550	600

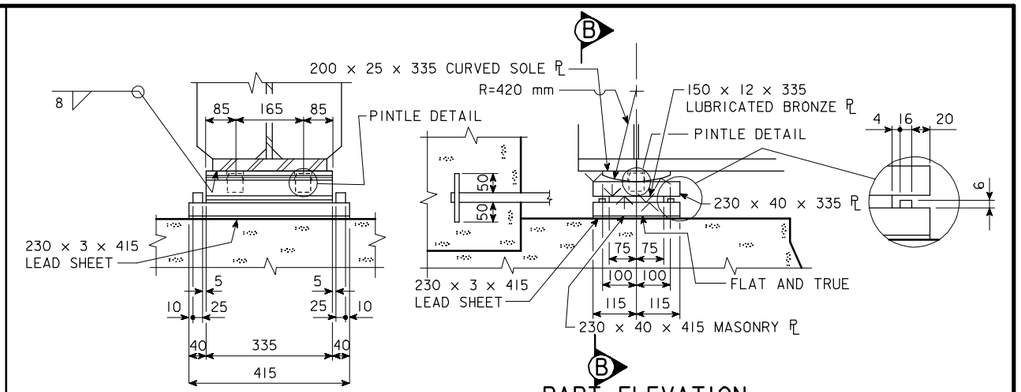

SECTION B-B

PART ELEVATION

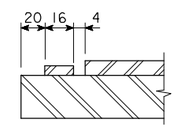

SECTION C-C

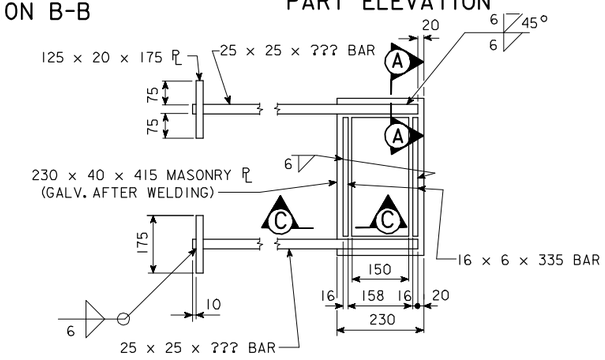

PLAN OF MASONRY PL AND BRONZE PL

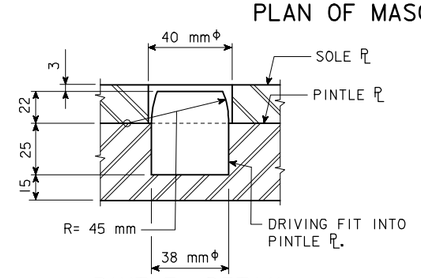

PINTLE DETAIL

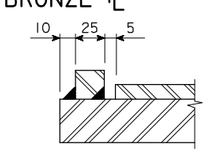

SECTION A-A

STEEL BEAM ABUTMENT BEARING DETAILS

ABUTMENT BEARING NOTES:

SURFACES MARKED "V" SHALL BE FINISHED 6 μm AND SURFACES MARKED " " V SHALL BE FINISHED 3 μm.

BRONZE PL SHALL BE LUBRICATED IN ACCORDANCE WITH IOWA D.O.T. METRIC STANDARD SPECIFICATIONS ARTICLE 4190.03 (SLIDING SURFACE ONLY) AND THE BRONZE METAL SHALL BE CAST BRONZE MEETING THE REQUIREMENTS OF ARTICLE 4190.03. TOP EDGES OF BRONZE PL SHALL BE BEVELED 3 mm.

MASONRY PLATES ARE TO BE SET ON A 3 mm LEAD SHEET.

SOLE PLATES, PINTLE PLATES, MASONRY PLATES, LUBRICATED BRONZE PLATES AND LEAD SHEETS ARE A PART OF THE SUPERSTRUCTURE STRUCTURAL STEEL QUANTITY. UNIT PRICE BID FOR "STRUCTURAL STEEL" SHALL INCLUDE ALLOWANCE FOR COST OF BRONZE PLATES AND LEAD SHEETS.

IOWA DEPARTMENT OF TRANSPORTATION - HIGHWAY DIVISION

DESIGN SHEET NO. ____ OF ____ FILE NO. _____ DESIGN NO. _____

REVISED : 6-4-97 : SPECIFICATIONS ADDED FOR PPCB CURVED SOLE PLATE. PPCB CURVED SOLE PLATE THICKNESS SHOWN AS 25 mm.
HM4541.SOI ; THIS SHEET ISSUED, 9-1-95.

DESIGN TEAM	STUB ABUT. BEARING DETAILS - PPCB BRIDGES / STEEL BEAM BRIDGES	STANDARD SHEET M4541	COUNTY	PROJECT NUMBER	SHEET NUMBER

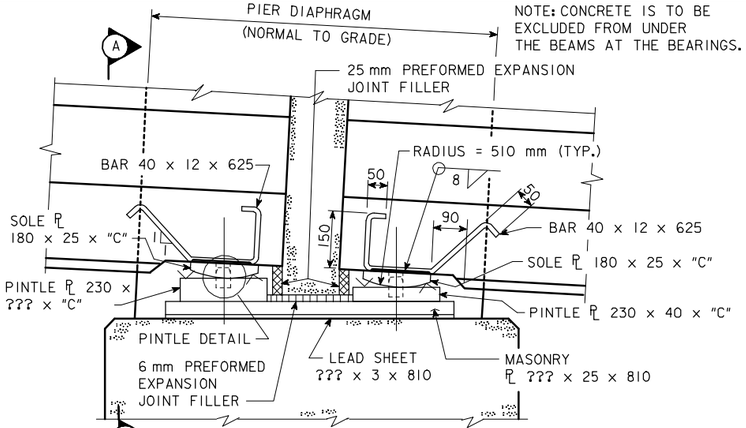

PART ELEVATION (LOOKING ???)

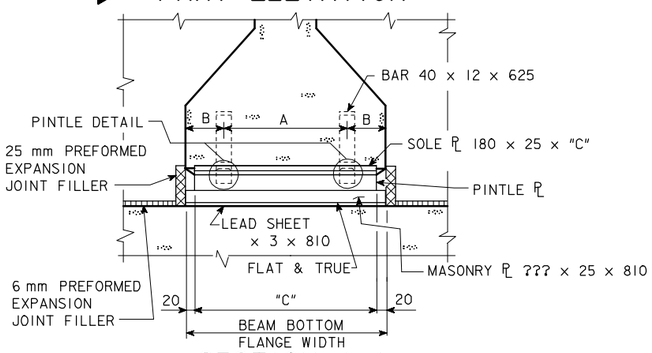

SECTION A-A

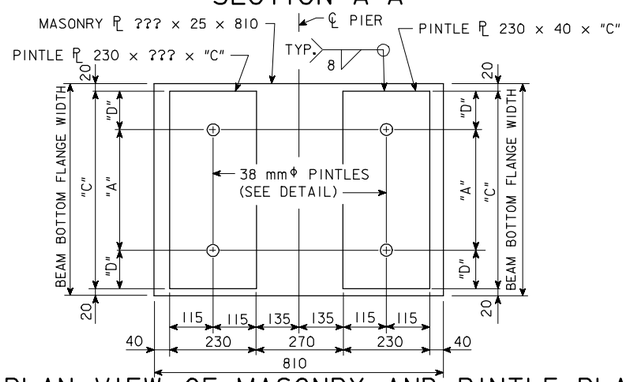

PLAN VIEW OF MASONRY AND PINTLE PLATES

FIXED PIER BEARING NOTES:

SURFACES MARKED "V" SHALL BE FINISHED 6 μm.
MASONRY PLATES ARE TO BE SET ON A 3 mm LEAD SHEET.
PINTLE PLATES, MASONRY PLATES, AND LEAD SHEETS ARE A PART OF THE SUPERSTRUCTURE STRUCTURAL STEEL QUANTITY. UNIT PRICE BID FOR "STRUCTURAL STEEL" SHALL INCLUDE ALLOWANCE FOR COST OF THE LEAD SHEETS.
COST OF ANCHORED CURVED SOLE PLATES IS TO BE INCLUDED IN THE PRICE BID FOR "PRETENSIONED PRESTRESSED CONCRETE BEAMS".
THE SOLE PLATES, PINTLE PLATES, AND MASONRY PLATES SHALL BE GALVANIZED. ALL WELDING SHALL BE COMPLETED PRIOR TO GALVANIZING. THE SURFACE OF THE PINTLE PLATE IN CONTACT WITH THE MASONRY PLATE SHALL BE FREE OF PROJECTIONS DUE TO GALVANIZING.
SOLE PLATES ARE TO BE SET IN FORMS WHEN BEAMS ARE CAST AND THE BOTTOM OF BEAMS FORMED OUT AS SHOWN TO EXCLUDE CONCRETE.
SOLE PLATES SHALL COMPLY WITH ONE OF THE FOLLOWING SPECIFICATIONS :
ASTM A 852M
ASTM A 514M GRADE B
ASTM A 709M GRADE HPS 485W

FIXED PIER

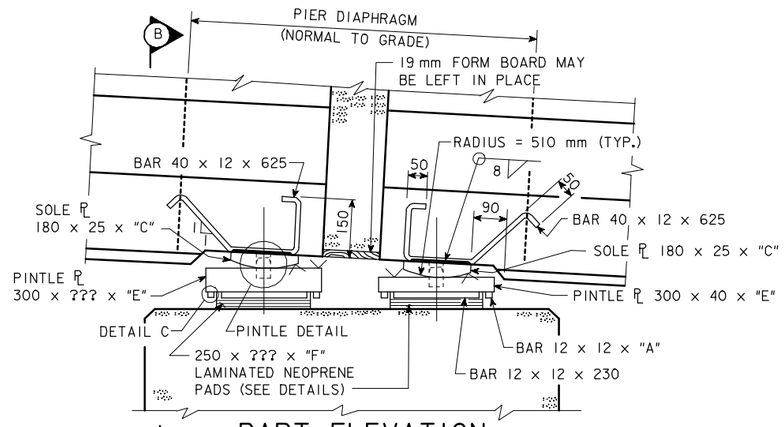

PART ELEVATION (LOOKING ???)

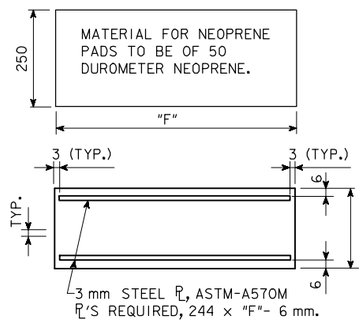

LAMINATED NEOPRENE PADS

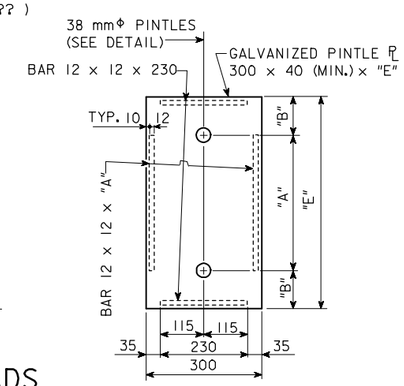

PLAN OF PINTLE PLATE

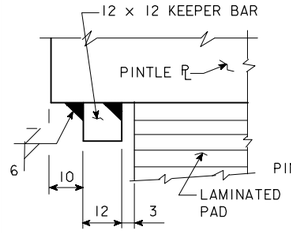

DETAIL C

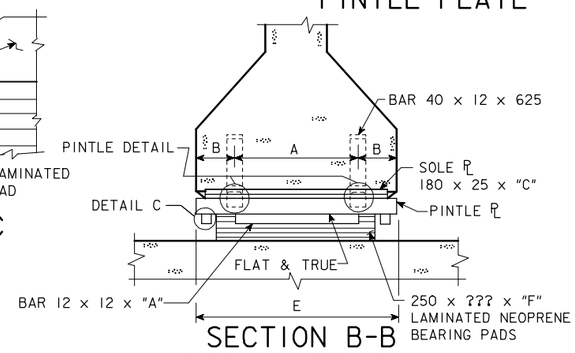

SECTION B-B
(DIAPHRAGM CONCRETE NOT SHOWN)

EXPANSION PIER BEARING NOTES:

SURFACES MARKED "V" SHALL BE FINISHED 6 μm.
PINTLE PLATES ARE A PART OF THE SUPERSTRUCTURE "STRUCTURAL STEEL QUANTITY".
COSTS OF ANCHORED CURVED SOLE PLATES AND NEOPRENE PADS ARE TO BE INCLUDED IN THE PRICE BID FOR "PRETENSIONED PRESTRESSED CONCRETE BEAMS".
THE SOLE PLATES AND PINTLE PLATES SHALL BE GALVANIZED. ALL WELDING SHALL BE COMPLETED PRIOR TO GALVANIZING. THE SURFACE OF THE PINTLE PLATE IN CONTACT WITH THE LAMINATED NEOPRENE PADS SHALL BE FREE OF PROJECTIONS DUE TO THE GALVANIZING.
SOLE PLATES ARE TO BE SET IN FORMS WHEN BEAMS ARE CAST AND THE BOTTOM OF BEAMS FORMED OUT AS SHOWN TO EXCLUDE CONCRETE.
SOLE PLATES SHALL COMPLY WITH ONE OF THE FOLLOWING SPECIFICATIONS :
ASTM A 852M
ASTM A 514M GRADE B
ASTM A 709M GRADE HPS 485W

EXPANSION PIER

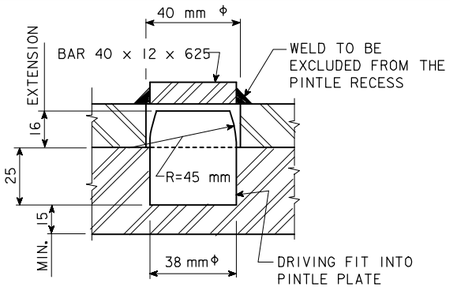

PINTLE DETAIL

VARIABLE DIMENSIONS

	BEAM BOTTOM FLANGE WIDTH		
	430	510	560
"A"	150	300	300
"B"	140	105	130
"C"	390	470	520
"D"	120	85	110
"E"	430	510	560
"F"	380	460	510

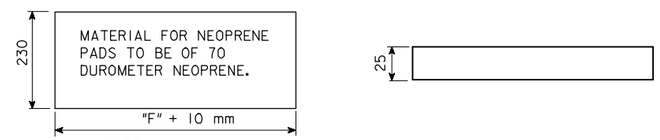

NOTE:
COST OF NEOPRENE PADS SHALL BE INCLUDED IN THE PRICE BID FOR "PRETENSIONED PRESTRESSED CONCRETE BEAMS".

FIXED PIER

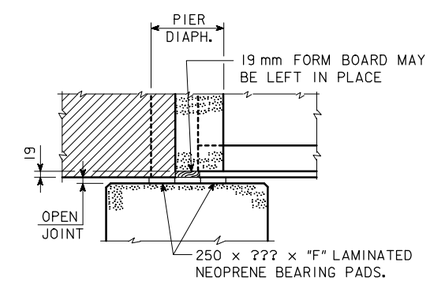

PART SECTION THROUGH EXPANSION PIER DIAPHRAGM

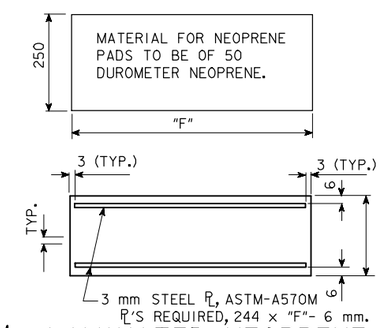

LAMINATED NEOPRENE PADS

NOTE:
COST OF NEOPRENE PADS SHALL BE INCLUDED IN THE PRICE BID FOR "PRETENSIONED PRESTRESSED CONCRETE BEAMS".

EXPANSION PIER

IOWA DEPARTMENT OF TRANSPORTATION - HIGHWAY DIVISION
DESIGN SHEET NO. ____ OF ____ FILE NO. _____ DESIGN NO. _____

REVISED : 6-4-97 ; SPECIFICATION ADDED FOR CURVED SOLE PLATE. PPCB CURVED SOLE PLATE THICKNESS SHOWN AS 25 mm.
HM4541A.S01 ; THIS SHEET ISSUED, 9-1-95.

DESIGN TEAM	PPC BEAM BRIDGES - PIER BEARING DETAILS	STANDARD SHEET M4541A	COUNTY	PROJECT NUMBER	SHEET NUMBER

10-FEB-2006 13:53 ajeffer W:\Projects\0000006002\BRFinal\MetricBeams.dgn m4541A

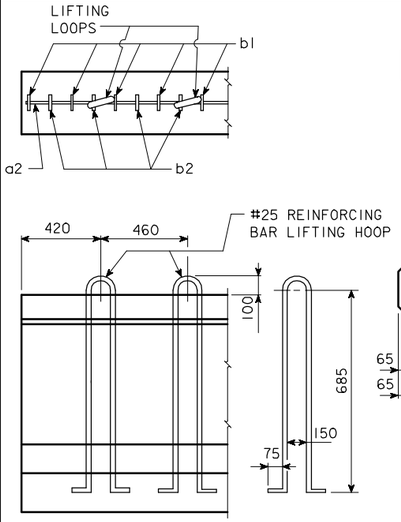

LIFTING LOOP DETAIL

ALTERNATE TYPES MAY BE SUBSTITUTED WITH THE APPROVAL OF THE ENGINEER. LIFTING LOOPS ARE TO BE STRUCTURAL GRADE.

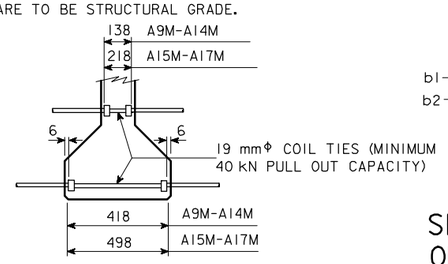

COIL TIE DETAIL

NUMBER AND EXACT LOCATION OF COIL TIES TO BE AS DETAILED ON SPECIFIC BRIDGE DESIGN.

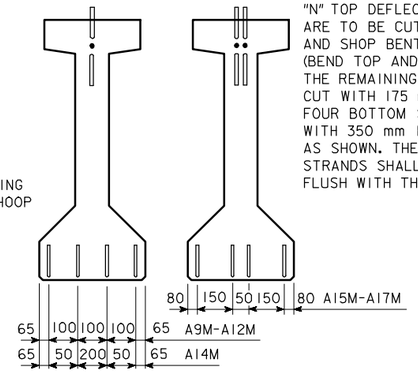

"N" TOP DEFLECTED OR STRAIGHT STRANDS ARE TO BE CUT WITH 350 mm PROJECTIONS AND SHOP BENT UP OR DOWN AS SHOWN (BEND TOP AND BOTTOM ROWS).
THE REMAINING TOP STRANDS ARE TO BE CUT WITH 175 mm PROJECTIONS.
FOUR BOTTOM STRANDS ARE TO BE CUT WITH 350 mm PROJECTIONS AND SHOP BENT AS SHOWN. THE REMAINING BOTTOM STRANDS SHALL BE CUT OFF REASONABLY FLUSH WITH THE CONCRETE.

BEAM	"N"
A9M-A14M	2
A15M-A17M	4

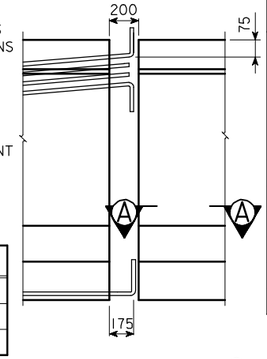

STRAND PROJECTION AT BEAM ENDS WHEN EMBEDDED IN CONCRETE END DIAPHRAGMS

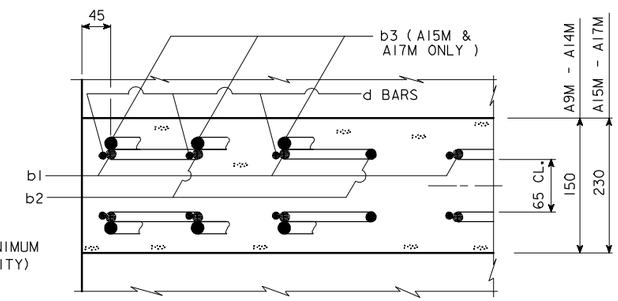

SECTION A-A SHOWING PLACEMENT OF STIRRUPS NEAR END OF BEAM

AM BEAM DATA

BEAM	SPAN LENGTH ℄-℄ BEARING	OVERALL BEAM LENGTH (L)	STRAND SIZE (mm)	NO. OF STRANDS STRAIGHT	NO. OF STRANDS DEFLECTED	TOTAL INITIAL PRESTRESS ③ kN	HOLD DOWN FORCE-kN	CAMBER (mm) AT RELEASE	CAMBER (mm) AFTER LOSSES	DEFLECTION (mm) Δ_D IMMEDIATE ① (ELASTIC) Δ_I CONC. DIAPH.	DEFLECTION IMMEDIATE ① (ELASTIC) Δ_I STEEL DIAPH.	DEFLECTION TIME ② (PLASTIC) Δ_T CONC. DIAPH.	DEFLECTION TIME ② (PLASTIC) Δ_T STEEL DIAPH.	PERMISSIBLE SPACING		PERMISSIBLE SPACING MS18 LOADING CONC. DIAPH.	PERMISSIBLE SPACING MS18 LOADING STEEL DIAPH.	MASS (kg)	CONCRETE (m^3)	REINFORCING STEEL (MASS - kg)
A9M	9500	9800	12.7Φ	12	0	1601	0	6	10	3	3	1	1			2200	2200	4647	1.9	145
A11M	11 000	11 300	12.7Φ	14	0	1868	0	9	16	5	5	1	1			2200	2200	5358	2.2	168
A12M	12 500	12 800	12.7Φ	10	3	1735	51	16	28	8	8	2	2			2200	2200	6070	2.5	181
A14M	14 000	14 300	12.7Φ	12	3	2002	46	21	37	13	12	3	3			2200	2200	6781	2.8	209
A15M	15 500	15 800	12.7Φ	14	4	2402	56	24	43	15	14	4	4			2200	2200	9952	4.1	229
A17M	17 000	17 300	12.7Φ	12	8	2756	87	26	47	22	21	6	5			2200	2200	10 897	4.5	259

① DEFLECTIONS AT MID-SPAN DUE TO WEIGHT OF SLAB AND DIAPHRAGM. THE DEFLECTIONS SHOWN ARE FOR A SLAB WEIGHT OF 10.7 kN/m. (200 mm SLAB AND 2200 mm BEAM SPACING) AND ONE CONCRETE DIAPHRAGM (8.18 kN) OR ONE STEEL DIAPHRAGM (1.22 kN) AT ℄ OF SPAN. FOR DIFFERENT SLAB AND DIAPHRAGM WEIGHTS, DEFLECTIONS WILL BE DIRECTLY PROPORTIONAL.

② DEFLECTIONS DUE TO THE COMBINED EFFECT OF CREEP DUE TO WEIGHT OF SLAB AND SHRINKAGE OF SLAB.

TOTAL BEAM DEFLECTIONS AT ℄ OF SPAN, Δ_D, DUE TO WEIGHT OF SLAB AND DIAPHRAGMS FOR DETAILING PURPOSE:
(A) $\Delta_D = \Delta_I + \Delta_T$ FOR SIMPLE SPAN.
(B) $\Delta_D = \Delta_I + \frac{3}{4}\Delta_T$ FOR END SPANS OF CONTINUOUS BRIDGE.
(C) $\Delta_D = \Delta_I + \frac{1}{2}\Delta_T$ FOR INTERIOR SPANS OF CONTINUOUS BRIDGE.

③ TOTAL INITIAL PRESTRESS FOR A9M THRU A15M INCLUSIVE IS BASED ON 72.622% f's, AND FOR A17M ON 75% f's.
f's = 1860 MPa AND As = 98.71 mm^2.

NOTES:

THESE BEAMS ARE DESIGNED FOR AASHTO LIVE LOADS AS INDICATED IN ABOVE TABLE WITH AN ALLOWANCE OF 960 Pa FOR FUTURE WEARING SURFACE.

HOLD DOWN POINTS FOR DEFLECTED STRANDS MAY BE MOVED TOWARD ENDS OF BEAM A DISTANCE OF 0.05 SPAN LENGTH MAXIMUM AT PRODUCER'S OPTION.

ALL PRESTRESSING STRANDS SHALL CONFORM TO ASTM A416 GRADE 270 LOW RELAXATION STRANDS.

TOPS OF BEAMS ARE TO BE STRUCK OFF LEVEL AND INTENTIONALLY ROUGHENED TRANSVERSELY TO A FULL AMPLITUDE OF APPROXIMATELY 6 mm EXCEPT A 50 mm WIDE FINISH SHALL BE PROVIDED ON THE TOP EDGE ON ONE SIDE ONLY OF THE BEAM.

BEARINGS SHALL BE AS DETAILED ON OTHER DESIGN SHEETS. BEAMS TO BE USED IN BRIDGES MADE CONTINUOUS BY THE POURED IN PLACE FLOOR, ARE TO BE AT LEAST 28 DAYS OLD BEFORE THE FLOOR IS PLACED UNLESS A SHORTER CURING TIME IS APPROVED BY THE BRIDGE ENGINEER.

THE PORTIONS OF THE PRESTRESS BEAMS THAT ARE TO BE EMBEDDED IN THE ABUTMENT AND PIER DIAPHRAGMS SHALL BE ROUGHENED FOR A DISTANCE OF 250 mm FROM THE BEAM END BY SANDBLASTING OR OTHER APPROVED METHODS TO PROVIDE SUITABLE BOND BETWEEN THE BEAM AND THE DIAPHRAGM IN ACCORDANCE WITH ARTICLE 2403.14 OF THE METRIC SPECIFICATIONS.

UNLESS OTHERWISE NOTED ALL BEAMS ARE TO BE INCREASED IN LENGTH BY .0005L TO COMPENSATE FOR ELASTIC SHORTENING, CREEP AND SHRINKAGE.

IF THE PRECAST PANEL OPTION IS ALLOWED AND USED FOR BRIDGE DECK FORMATION, THE BEAM STIRRUPS WILL NEED TO BE EXTENDED AND TOP FLANGE BEAM FINISH SHALL BE MODIFIED AS PER DETAILS ON THE PRECAST DECK PANEL SHEET.

IF THE STEEL DIAPHRAGM OPTION IS ALLOWED AND USED, HOLES MUST BE CAST IN THE WEB TO ACCOMMODATE THE STEEL DIAPHRAGM ATTACHMENTS AS DETAILED ON THE STEEL DIAPHRAGM DETAIL SHEET.

IF SOLE PLATE IS REQUIRED FOR BEARING, SOLE PLATE IS TO BE SET IN FORMS WHEN BEAM IS CAST AND FORMED OUT BELOW TO EXCLUDE CONCRETE AS DETAILED ON THE BEARING SHEET.

IF STUB ABUTMENTS ARE USED, ALL STRANDS AT THE ENDS OF BEAMS AT STUB ABUTMENTS SHALL BE CUT OFF REASONABLY FLUSH WITH THE CONCRETE.

ALL DIMENSIONS ARE IN MILLIMETERS (mm) UNLESS OTHERWISE NOTED OR SHOWN.

12.7 mm DIAMETER STRANDS STRESSED TO NOT MORE THAN 14 kN EACH MAY BE USED IN LIEU OF THE a BARS WHICH RUN THE FULL LENGTH OF THE BEAM IN THE TOP FLANGE.

WHEN EXPANSION JOINTS ARE USED, CONCRETE SEALER SHALL BE APPLIED TO THE PRESTRESSED BEAM END SECTION. THE SEALING SHALL BE IN ACCORDANCE WITH MATERIALS I.M. 570 AND 491.12.

SPECIFICATIONS:

CONSTRUCTION: STANDARD SPECIFICATIONS OF THE IOWA DEPARTMENT OF TRANSPORTATION, CURRENT SERIES, WITH CURRENT APPLICABLE SPECIAL PROVISIONS AND SUPPLEMENTAL SPECIFICATIONS.
DESIGN: AASHTO, SERIES OF 1992 WITH MINOR MODIFICATIONS.

DESIGN STRESSES:

DESIGN STRESSES FOR THE FOLLOWING MATERIALS ARE TO BE IN ACCORDANCE WITH AASHTO STANDARD SPECIFICATIONS FOR HIGHWAY BRIDGES, SERIES OF 1992. DESIGN STRESS INFORMATION HAS BEEN CONVERTED TO A METRIC VERSION.

REINFORCING STEEL IN ACCORDANCE WITH SECTION 8, GRADE 400.

CONCRETE IN ACCORDANCE WITH SECTION 9, f'c = 35 MPa .

PRESTRESSING STEEL IN ACCORDANCE WITH SECTION 9, GRADE 270.

REINFORCING BAR LIST

	BEAM / SPAN			A9M 9500		A11M 11 000		A12M 12 500		A14M 14 000		A15M 15 500		A17M 17 000	
	MARK	SIZE	SHAPE	NO.	LENGTH	NO.	LENGTH	NO.	LENGTH	NO.	LENGTH	NO.	LENGTH	NO.	LENGTH
	a1	16	—	2	9720	2	11 220	4	6810	4	7560	4	8310	4	9060
	a2	13	—	2	1000	2	1000	2	1000	2	1000	2	1000	2	1000
ΔΔ	b1	13	⊂⊃	32	2010	36	2010	38	2010	42	2010	44	2010	48	2010
	b2	13	⊂⊃	4	1530	6	1530	6	1530	10	1530	6	1530	8	1530
	b3	19	⌒	—	—	—	—	—	—	—	—	8	830	12	830
	c1	10	⊓	32	380	36	380	38	380	42	380	—	—	—	—
	c2	10	⊓	—	—	—	—	—	—	—	—	44	410	48	410
*	d1	10	∠	72	820	84	820	88	820	104	820	—	—	—	—
*	d2	10	∠	—	—	—	—	—	—	—	—	100	870	112	870
	e1	10	⊓	8	450	10	450	10	450	12	450	—	—	—	—
	e2	10	⊓	—	—	—	—	—	—	—	—	12	500	14	500

ΔΔ b1 BARS TO BE EPOXY COATED.

* WHERE DEFLECTING STRANDS INTERFERE WITH PLACEMENT, SOME IN-PLACE BENDING MAY BE NECESSARY.

BENT BAR DETAILS

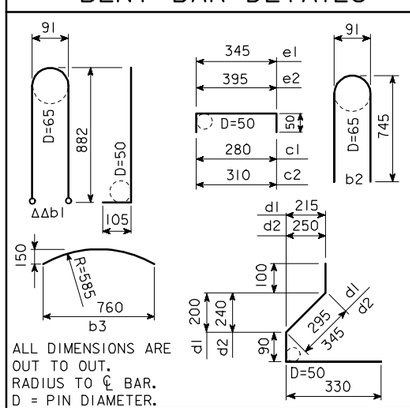

ALL DIMENSIONS ARE OUT TO OUT.
RADIUS TO ℄ BAR.
D = PIN DIAMETER.

AM BEAM DETAILS

IOWA DEPARTMENT OF TRANSPORTATION - HIGHWAY DIVISION

DESIGN SHEET NO. ____ OF ____ FILE NO. _____ DESIGN NO. _____

REVISED 05-04 - BARS b1 CHANGED TO EPOXY COATED. a1, a2 CHANGED TO 16; b1, b2 TO 13; b3 TO 19.
HM4600.S01 : THIS SHEET ISSUED 9-1-95.

NOTE: DIMENSIONS FOR THE LOCATION OF THE DEFLECTED STRANDS ARE AT ℄ BEAM AND END OF BEAM.

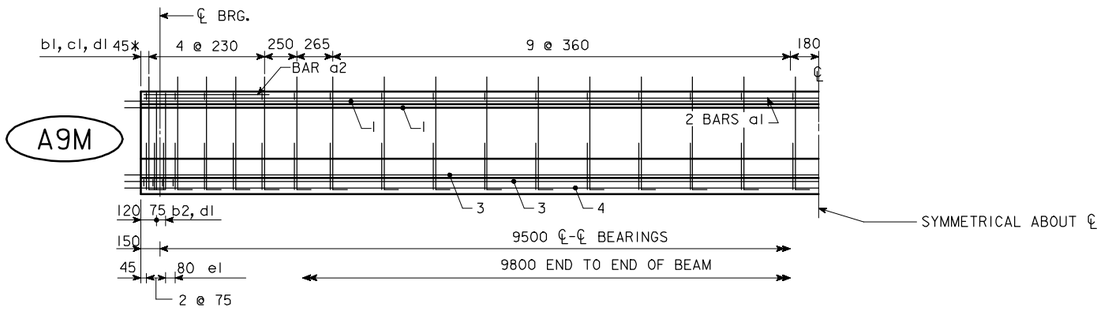

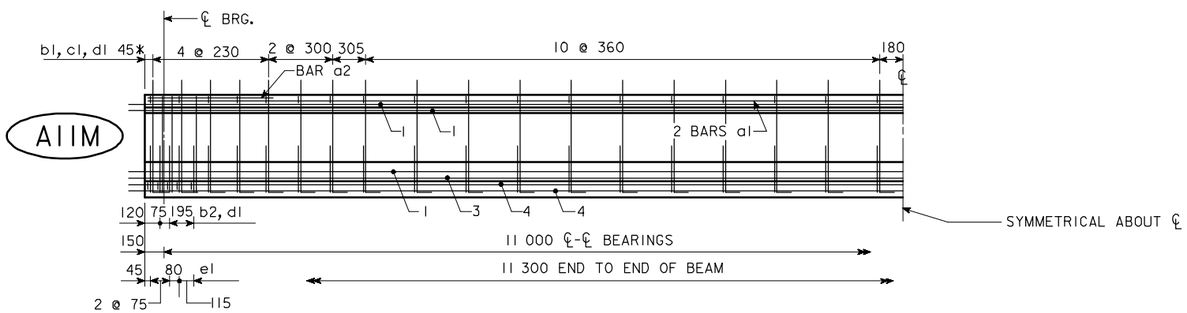

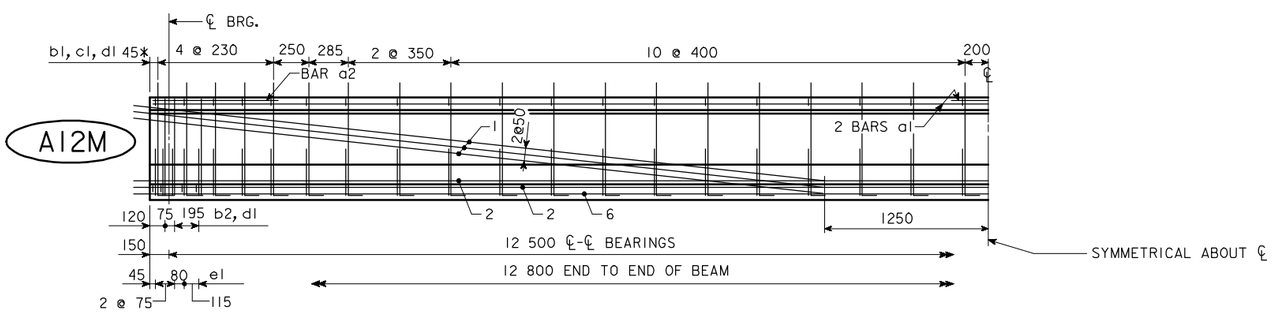

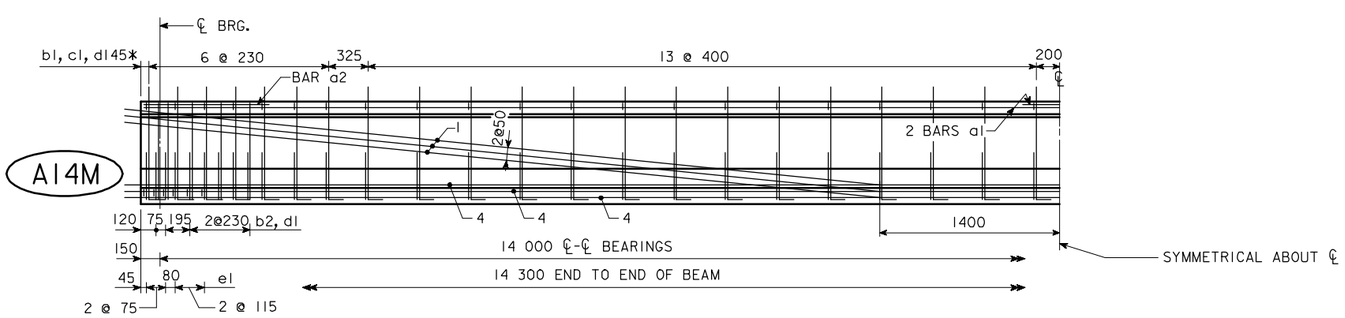

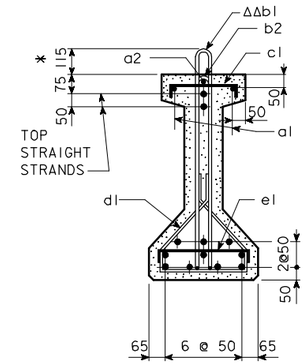

BEAM A9M

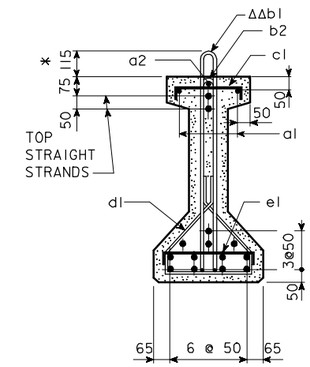

BEAM A11M

NOTE: BARS d1 ARE TO BE PLACED IN PAIRS.

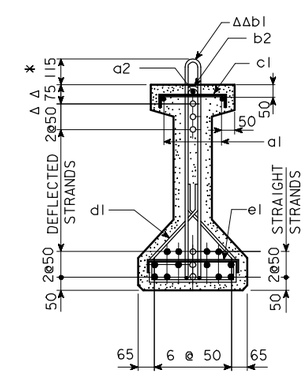

BEAM A14M

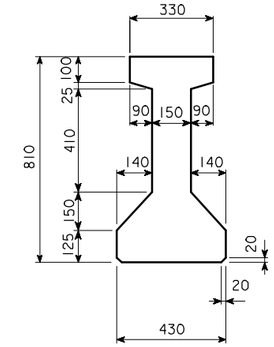

BEAM
A9M - A14M

A = 197 350 mm²
Y_b = 356 mm
I = 13 882 560 000 mm⁴

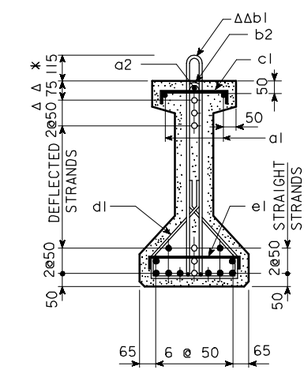

BEAM A12M

○ DEFLECTED STRANDS
* KEEP
Δ DIMENSIONS AT END OF BEAM
ΔΔ EPOXY COATED BARS

A9M-A14M BEAM DETAILS

IOWA DEPARTMENT OF TRANSPORTATION - HIGHWAY DIVISION
DESIGN SHEET NO. ____ OF ____ FILE NO. _____ DESIGN NO. _____

REVISED 05-04 - BARS b1 CHANGED TO EPOXY COATED.
HM4601.S01: THIS SHEET ISSUED 9-1-95.

DESIGN TEAM	AM BEAMS	STANDARD SHEET M4601	COUNTY	PROJECT NUMBER	SHEET NUMBER

10-FEB-2006 13:54 ajeffer W:\Projects\0000006002\BRFinal\MetricBeams.dgn m4601

NOTE: DIMENSIONS FOR THE LOCATION OF THE DEFLECTED STRANDS ARE AT ℄ BEAM AND END OF BEAM.

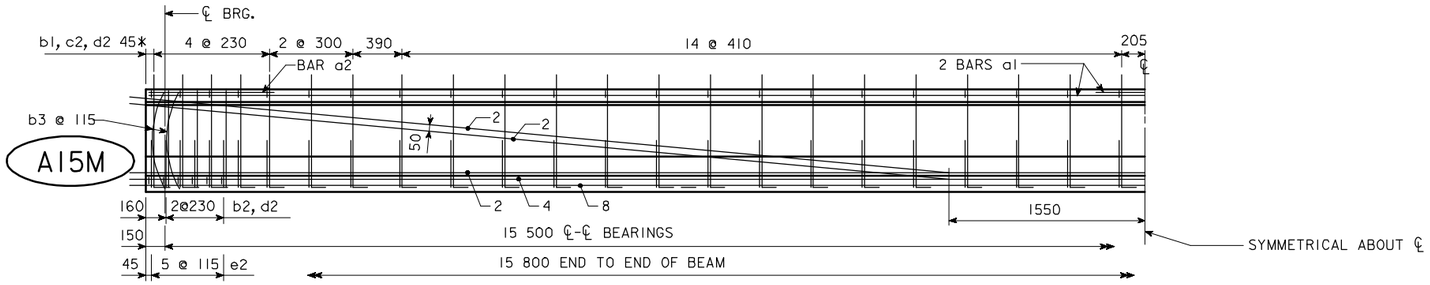

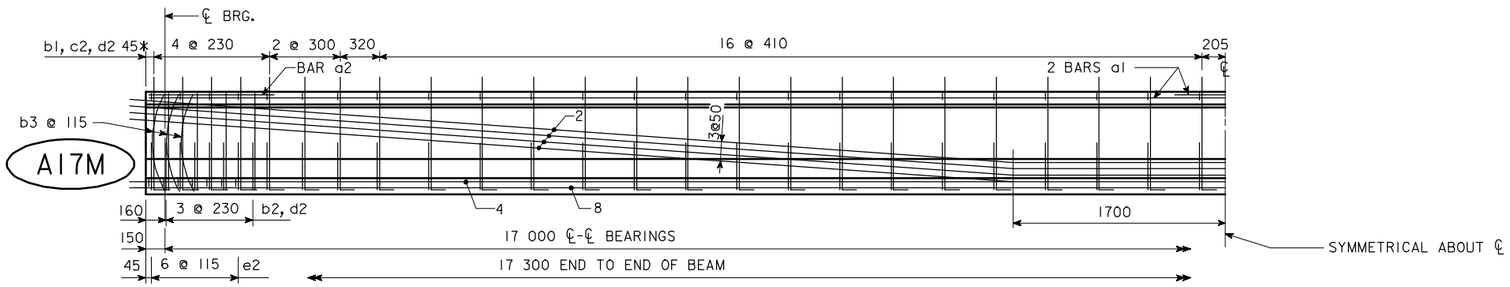

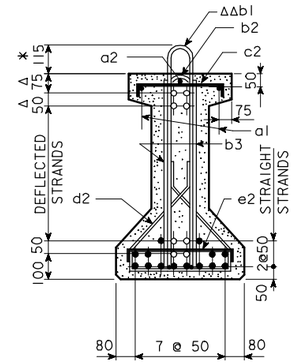

BEAM A15M

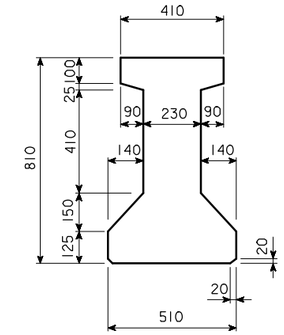

BEAM
A15M - A17M

A = 262 150 mm²
Y_b = 368 mm
I = 17 540 820 000 mm⁴

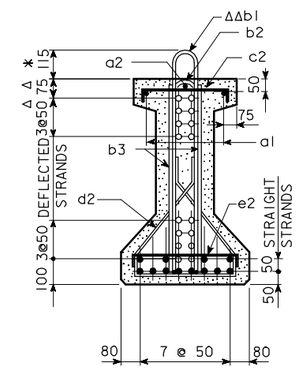

BEAM A17M

NOTE: BARS b3 AND d2 ARE TO BE PLACED IN PAIRS.

○ DEFLECTED STRANDS
* KEEP
Δ DIMENSIONS AT END OF BEAM
ΔΔ EPOXY COATED BARS

A15M-A17M BEAM DETAILS

IOWA DEPARTMENT OF TRANSPORTATION - HIGHWAY DIVISION
DESIGN SHEET NO. ____ OF ____ FILE NO. _____ DESIGN NO. _____

REVISED 05-04 - BARS b1 CHANGED TO EPOXY COATED.
HM4602.S01 : THIS SHEET ISSUED 9-1-95.

DESIGN TEAM	AM BEAMS	STANDARD SHEET M4602	COUNTY	PROJECT NUMBER	SHEET NUMBER

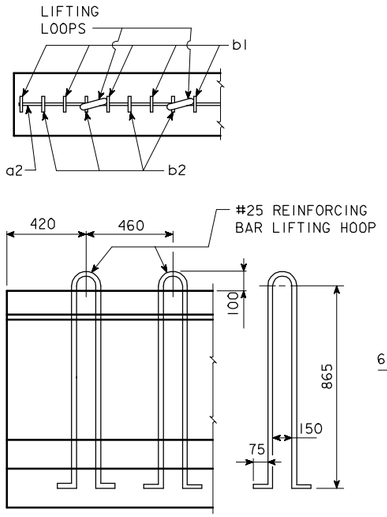

LIFTING LOOP DETAIL

ALTERNATE TYPES MAY BE SUBSTITUTED WITH THE APPROVAL OF THE ENGINEER. LIFTING LOOPS ARE TO BE STRUCTURAL GRADE.

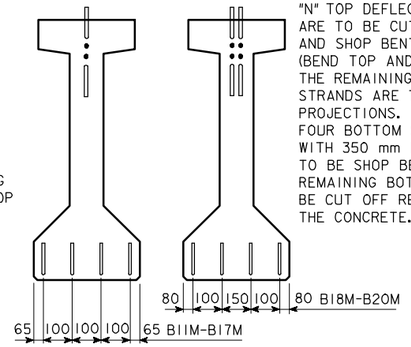

"N" TOP DEFLECTED OR STRAIGHT STRANDS ARE TO BE CUT WITH 350 mm PROJECTIONS AND SHOP BENT UP OR DOWN AS SHOWN (BEND TOP AND BOTTOM ROWS).
THE REMAINING TOP DEFLECTED STRANDS ARE TO BE CUT WITH 175 mm PROJECTIONS.
FOUR BOTTOM STRANDS ARE TO BE CUT WITH 350 mm PROJECTIONS WHICH ARE TO BE SHOP BENT AS SHOWN. THE REMAINING BOTTOM STRANDS ARE TO BE CUT OFF REASONABLY FLUSH WITH THE CONCRETE.

BEAM	"N"
B11M-B17M	2
B18M-B20M	4

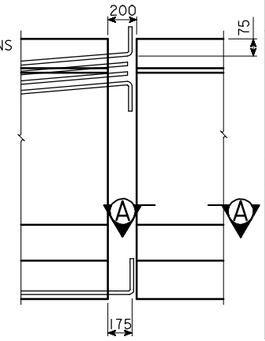

STRAND PROJECTION AT BEAM ENDS WHEN EMBEDDED IN CONCRETE END DIAPHRAGMS

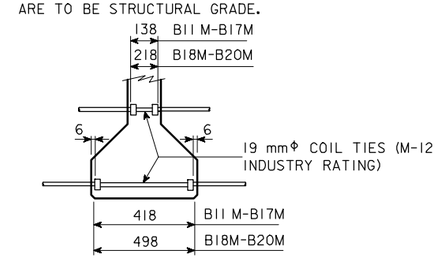

COIL TIE DETAIL

NUMBER AND EXACT LOCATION OF COIL TIES TO BE AS DETAILED ON SPECIFIC BRIDGE DESIGN.

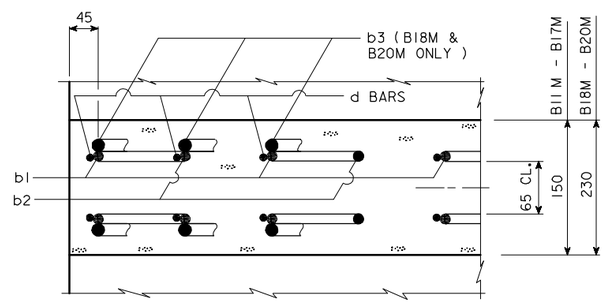

SECTION A-A SHOWING PLACEMENT OF STIRRUPS NEAR END OF BEAM

BM BEAD DATA

BEAM	SPAN LENGTH ℄-℄ BEARING	OVERALL BEAM LENGTH (L)	STRAND SIZE (mm)	NO. OF STRANDS		TOTAL INITIAL PRESTRESS ③ kN	HOLD DOWN FORCE-kN	CAMBER (mm)		DEFLECTION (mm) Δ_D				PERMISSIBLE SPACING				MASS (kg)	CONCRETE (m^3)	REINFORCING STEEL (MASS - kg)
				STRAIGHT	DEFLECTED			AT RELEASE	AFTER LOSSES	IMMEDIATE① (ELASTIC) Δ_I		TIME ② (PLASTIC) Δ_T				MS18 LOADING				
										CONC. DIAPH.	STEEL DIAPH.	CONC. DIAPH.	STEEL DIAPH.			CONC. DIAPH.	STEEL DIAPH.			
B11M	11 000	11 300	12.7Φ	12	0	1601	0	5	8	3	3	1	1			2200	2200	6700	2.8	186
B12M	12 500	12 800	12.7Φ	14	0	1868	0	6	10	5	4	1	1			2200	2200	7500	3.1	213
B14M	14 000	14 300	12.7Φ	9	3	1601	56	11	20	7	7	2	2			2200	2200	8400	3.5	226
B15M	15 500	15 800	12.7Φ	10	4	1868	68	15	27	11	10	3	3			2200	2200	9300	3.9	254
B17M	17 000	17 300	12.7Φ	14	5	2535	72	24	43	15	14	4	4			2200	2200	10 200	4.2	283
B18M	18 500	18 800	12.7Φ	16	6	2936	86	24	43	17	16	4	4			2200	2200	14 600	6.1	322
B20M	20 000	20 300	12.7Φ	18	8	3470	99	29	51	23	22	6	6			2200	2200	15 800	6.6	343

① DEFLECTIONS AT MID-SPAN DUE TO WEIGHT OF SLAB AND DIAPHRAGM. THE DEFLECTIONS SHOWN ARE FOR A SLAB WEIGHT OF 10.7 kN/m. (200 mm SLAB AND 2200 mm BEAM SPACING) AND ONE CONCRETE DIAPHRAGM (9.7 kN) OR ONE STEEL DIAPHRAGM (1.22 kN) AT ℄ OF SPAN. FOR DIFFERENT SLAB AND DIAPHRAGM WEIGHTS, DEFLECTIONS WILL BE DIRECTLY PROPORTIONAL.

② DEFLECTIONS DUE TO THE COMBINED EFFECT OF CREEP DUE TO WEIGHT OF SLAB AND SHRINKAGE OF SLAB.

TOTAL BEAM DEFLECTIONS AT ℄ OF SPAN, Δ_D, DUE TO WEIGHT OF SLAB AND DIAPHRAGMS FOR DETAILING PURPOSE:

(A) $\Delta_D = \Delta_I + \Delta_T$ FOR SIMPLE SPAN.
(B) $\Delta_D = \Delta_I + \frac{3}{4}\Delta_T$ FOR END SPANS OF CONTINUOUS BRIDGE.
(C) $\Delta_D = \Delta_I + \frac{1}{2}\Delta_T$ FOR INTERIOR SPANS OF CONTINUOUS BRIDGE.

③ TOTAL INITIAL PRESTRESS FOR B11M THRU B20M IS BASED ON 72.622% f's.
f's = 1860 MPa AND As = 98.71 mm^2.

NOTES:

THESE BEAMS ARE DESIGNED FOR AASHTO LIVE LOADS AS INDICATED IN ABOVE TABLE WITH AN ALLOWANCE OF 960 Pa FOR FUTURE WEARING SURFACE.

HOLD DOWN POINTS FOR DEFLECTED STRANDS MAY BE MOVED TOWARD ENDS OF BEAM A DISTANCE OF 0.05 SPAN LENGTH MAXIMUM AT PRODUCER'S OPTION.

ALL PRESTRESSING STRANDS SHALL CONFORM TO ASTM A416 GRADE 270 LOW RELAXATION STRANDS.

TOPS OF BEAMS ARE TO BE STRUCK OFF LEVEL AND INTENTIONALLY ROUGHENED TRANSVERSELY TO A FULL AMPLITUDE OF APPROXIMATELY 6 mm EXCEPT A 50 mm WIDE FINISH SHALL BE PROVIDED ON THE TOP EDGE ON ONE SIDE ONLY OF THE BEAM.

BEARINGS SHALL BE AS DETAILED ON OTHER DESIGN SHEETS. BEAMS TO BE USED IN BRIDGES MADE CONTINUOUS BY THE POURED IN PLACE FLOOR, ARE TO BE AT LEAST 28 DAYS OLD BEFORE THE FLOOR IS PLACED UNLESS A SHORTER CURING TIME IS APPROVED BY THE BRIDGE ENGINEER.

THE PORTIONS OF THE PRESTRESS BEAMS THAT ARE TO BE EMBEDDED IN THE ABUTMENT AND PIER DIAPHRAGMS SHALL BE ROUGHENED FOR A DISTANCE OF 250 mm FROM THE BEAM END BY SANDBLASTING OR OTHER APPROVED METHODS TO PROVIDE SUITABLE BOND BETWEEN THE BEAM AND THE DIAPHRAGM IN ACCORDANCE WITH ARTICLE 2403.14 OF THE METRIC SPECIFICATIONS.

UNLESS OTHERWISE NOTED ALL BEAMS ARE TO BE INCREASED IN LENGTH BY .0005L TO COMPENSATE FOR ELASTIC SHORTENING, CREEP AND SHRINKAGE.

IF THE PRECAST PANEL OPTION IS ALLOWED AND USED FOR BRIDGE DECK FORMATION, THE BEAM STIRRUPS WILL NEED TO BE EXTENDED AND TOP FLANGE BEAM FINISH SHALL BE MODIFIED AS PER DETAILS ON THE PRECAST DECK PANEL SHEET.

IF THE STEEL DIAPHRAGM OPTION IS ALLOWED AND USED, HOLES MUST BE CAST IN THE WEB TO ACCOMMODATE THE STEEL DIAPHRAGM ATTACHMENTS AS DETAILED ON THE STEEL DIAPHRAGM DETAIL SHEET.

IF SOLE PLATE IS REQUIRED FOR BEARING, SOLE PLATE IS TO BE SET IN FORMS WHEN BEAM IS CAST AND FORMED OUT BELOW TO EXCLUDE CONCRETE AS DETAILED ON THE BEARING SHEET.

IF STUB ABUTMENTS ARE USED, ALL STRANDS AT THE ENDS OF BEAMS AT STUB ABUTMENTS SHALL BE CUT OFF REASONABLY FLUSH WITH THE CONCRETE.

ALL DIMENSIONS ARE IN MILLIMETERS (mm) UNLESS OTHERWISE NOTED OR SHOWN.

12.7 mm DIAMETER STRANDS STRESSED TO NOT MORE THAN 14 kN EACH MAY BE USED IN LIEU OF THE a BARS WHICH RUN THE FULL LENGTH OF THE BEAM IN THE TOP FLANGE.

WHEN EXPANSION JOINTS ARE USED, CONCRETE SEALER SHALL BE APPLIED TO THE PRESTRESSED BEAM END SECTION. THE SEALING SHALL BE IN ACCORDANCE WITH MATERIALS I.M. 570 AND 491.12.

SPECIFICATIONS:

CONSTRUCTION: STANDARD SPECIFICATIONS OF THE IOWA DEPARTMENT OF TRANSPORTATION, CURRENT SERIES, WITH CURRENT APPLICABLE SPECIAL PROVISIONS AND SUPPLEMENTAL SPECIFICATIONS.
DESIGN: AASHTO, SERIES OF 1992 WITH MINOR MODIFICATIONS.

DESIGN STRESSES:

DESIGN STRESSES FOR THE FOLLOWING MATERIALS ARE TO BE IN ACCORDANCE WITH AASHTO STANDARD SPECIFICATIONS FOR HIGHWAY BRIDGES, SERIES OF 1992. DESIGN STRESS INFORMATION HAS BEEN CONVERTED TO A METRIC VERSION.

REINFORCING STEEL IN ACCORDANCE WITH SECTION 8, GRADE 400.

CONCRETE IN ACCORDANCE WITH SECTION 9, f'c = 35 MPa .

PRESTRESSING STEEL IN ACCORDANCE WITH SECTION 9, GRADE 270.

REINFORCING BAR LIST

	BEAM / SPAN			B11M 11 000		B12M 12 500		B14M 14 000		B15M 15 500		B17M 17 000		B18M 18 500		B20M 20 000	
	MARK	SIZE	SHAPE	NO.	LENGTH	NO.	LENGTH	NO.	LENGTH	NO.	LENGTH	NO.	LENGTH	NO.	LENGTH	NO.	LENGTH
	a1	19	—	2	11 220	4	6920	4	7670	4	8420	4	9170	4	9920	4	10 670
	a2	13	—	2	800	2	800	2	800	2	1000	2	1000	2	1000	2	1000
ΔΔ	b1	13	⊂	30	2370	34	2370	36	2370	40	2370	46	2370	48	2370	52	2370
	b2	13	⊂	8	1890	8	1890	8	1890	10	1890	10	1890	8	1890	8	1890
	b3	19	⌒	—	—	—	—	—	—	—	—	—	—	12	1000	12	1000
	c1	10	⊓	30	430	34	430	36	430	40	430	46	430	—	—	—	—
	c2	10	⊓	—	—	—	—	—	—	—	—	—	—	48	460	52	460
*	d1	10	⌐	76	870	84	870	88	870	100	870	112	870	—	—	—	—
*	d2	10	⌐	—	—	—	—	—	—	—	—	—	—	112	920	120	920
	e1	10	⊓	12	500	14	500	14	500	16	500	20	500	—	—	—	—
	e2	10	⊓	—	—	—	—	—	—	—	—	—	—	16	550	16	550

ΔΔ b1 BARS TO BE EPOXY COATED.

* WHERE DEFLECTING STRANDS INTERFERE WITH PLACEMENT, SOME IN-PLACE BENDING MAY BE NECESSARY.

BENT BAR DETAILS

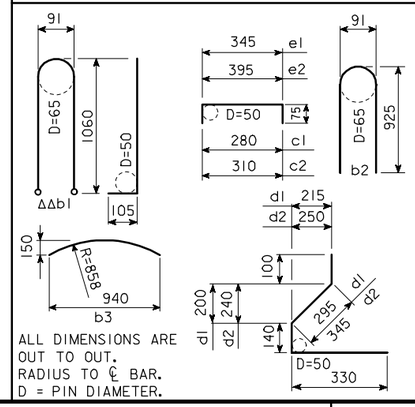

ALL DIMENSIONS ARE OUT TO OUT.
RADIUS TO ℄ BAR.
D = PIN DIAMETER.

BM BEAM DETAILS

IOWA DEPARTMENT OF TRANSPORTATION - HIGHWAY DIVISION

DESIGN SHEET NO. ____ OF ____ FILE NO. _____ DESIGN NO. _____

REVISED 05-04 - BARS b1 CHANGED TO EPOXY COATED. a1, b3 CHANGED TO 19; a2 TO 16; b1, b2 TO 13.
HM4610.SOI : THIS SHEET ISSUED 9-1-95.

DESIGN TEAM	BM BEAMS	STANDARD SHEET M4610	COUNTY	PROJECT NUMBER	SHEET NUMBER

NOTE: DIMENSIONS FOR THE LOCATION OF THE DEFLECTED STRANDS ARE AT ℄ BEAM AND END OF BEAM.

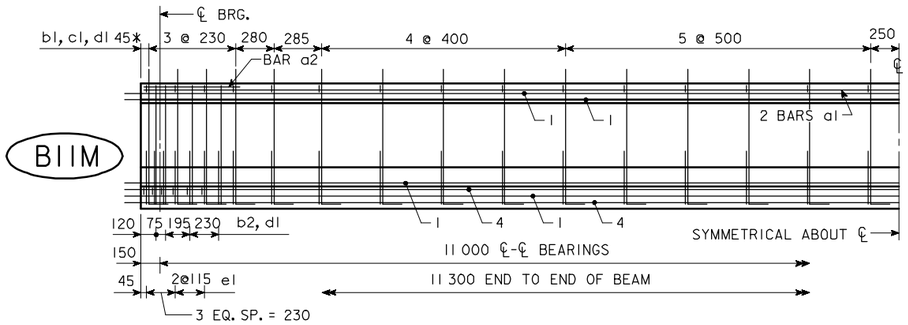

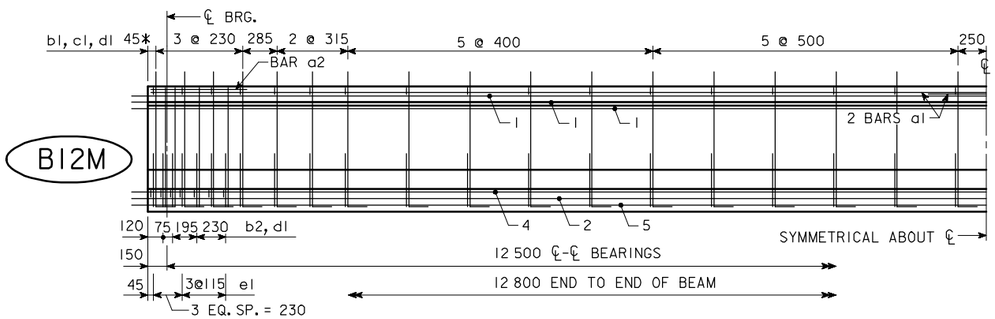

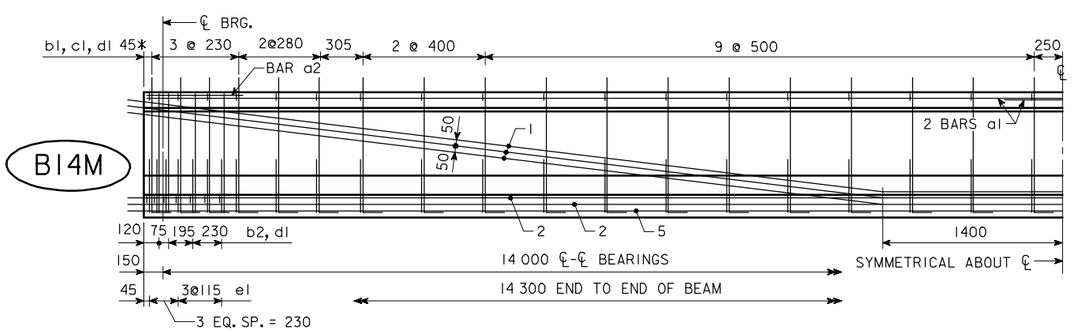

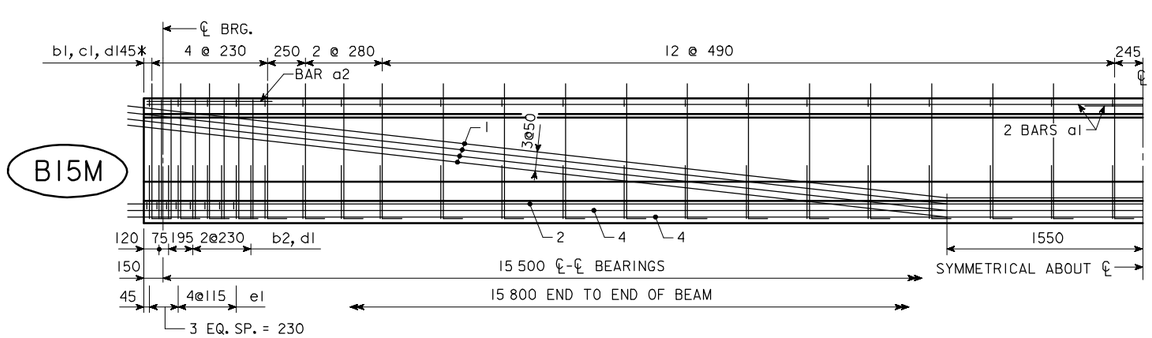

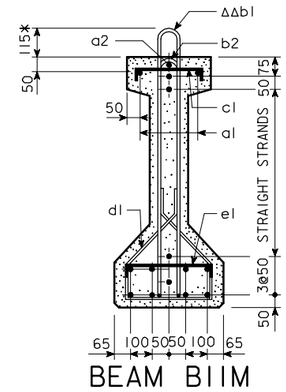

BEAM B11M

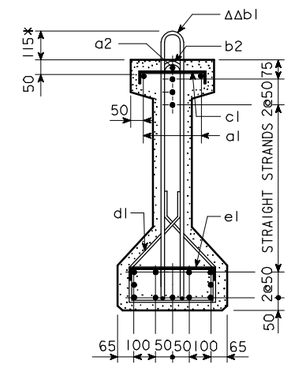

BEAM B12M

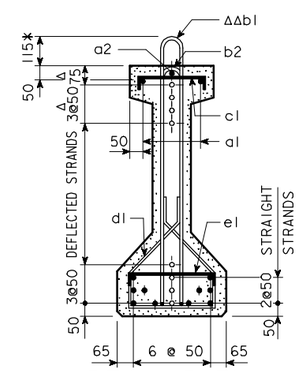

BEAM B15M

NOTE: BARS d1 ARE TO BE PLACED IN PAIRS.

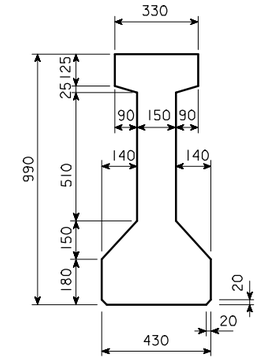

BEAM
B11M - B15M

A = 244 250 mm²
Y_b = 433 mm
I = 25 519 150 000 mm⁴

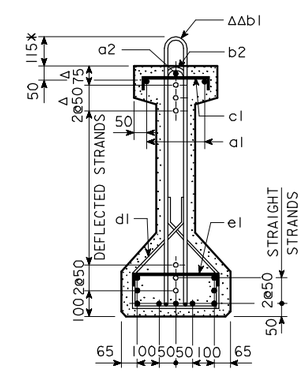

BEAM B14M

○ DEFLECTED STRANDS
✱ KEEP
Δ DIMENSIONS AT END OF BEAM
ΔΔ EPOXY COATED BARS

B11M-B15M BEAM DETAILS

IOWA DEPARTMENT OF TRANSPORTATION - HIGHWAY DIVISION

DESIGN SHEET NO. ____ OF ____ FILE NO. _____ DESIGN NO. _____

REVISED 05-04 - BARS b1 CHANGED TO EPOXY COATED.
HM611.S01: THIS SHEET ISSUED 9-1-95.

DESIGN TEAM	BM BEAMS	STANDARD SHEET M611	COUNTY	PROJECT NUMBER	SHEET NUMBER

10-FEB-2006 13:55 ajeffer W:\Projects\0000006002\BRFinal\MetricBeams.dgn m4611

NOTE: DIMENSIONS FOR THE LOCATION OF THE DEFLECTED STRANDS ARE AT ℄ BEAM AND END OF BEAM.

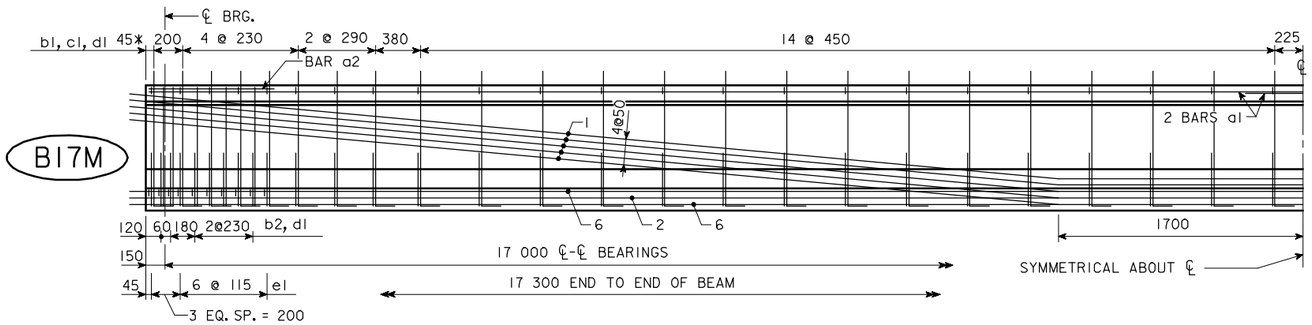

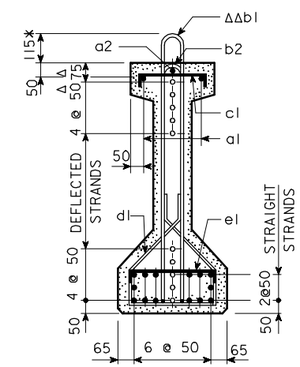

BEAM B17M

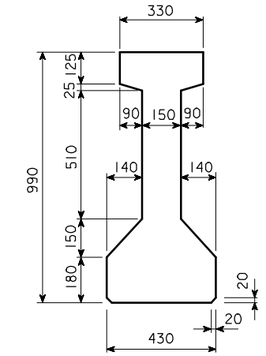

BEAM B17M

A = 244 250 mm²
Y_b = 433 mm
I = 25 519 150 000 mm⁴

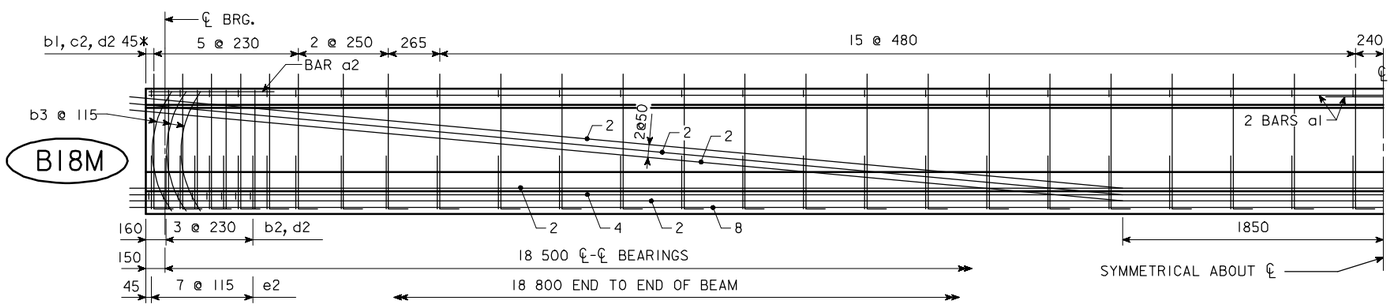

NOTE: BARS b3, d1 AND d2 ARE TO BE PLACED IN PAIRS.

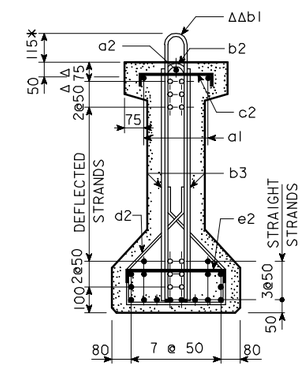

BEAM B18M

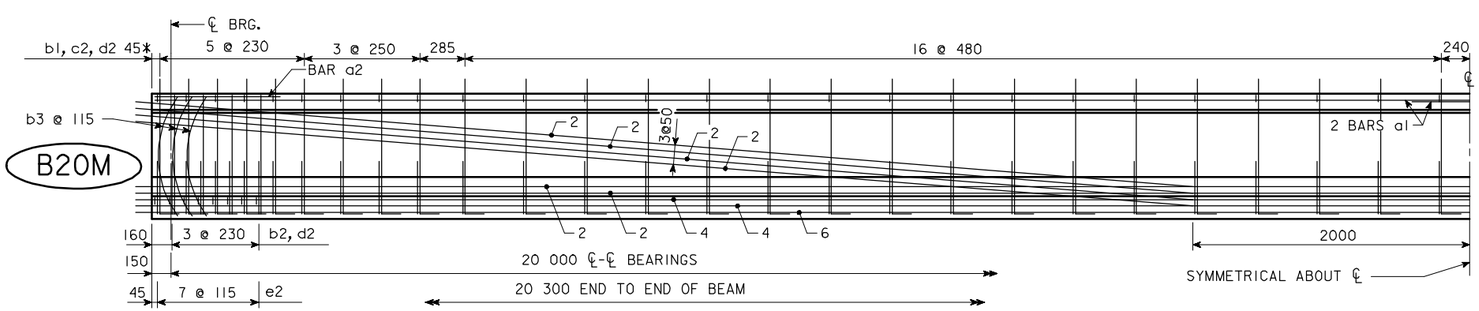

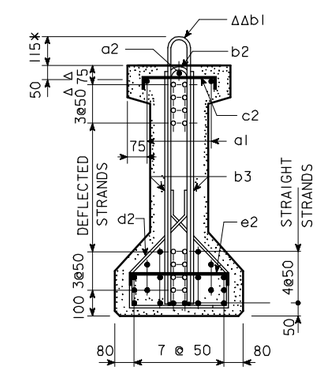

BEAM B20M

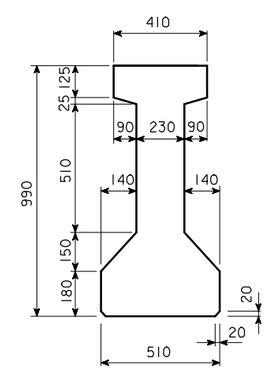

BEAM B18M - B20M

A = 323 450 mm²
Y_b = 448 mm
I = 32 220 470 000 mm⁴

o DEFLECTED STRANDS
* KEEP
Δ DIMENSIONS AT END OF BEAM
ΔΔ EPOXY COATED BARS

B17M-B20M BEAM DETAILS

IOWA DEPARTMENT OF TRANSPORTATION - HIGHWAY DIVISION

DESIGN SHEET NO. ____ OF ____ FILE NO. _____ DESIGN NO. _____

DESIGN TEAM	BM BEAMS	STANDARD SHEET M4612	COUNTY	PROJECT NUMBER	SHEET NUMBER

REVISED 05-04 - BARS b1 CHANGED TO EPOXY COATED.
HM4612.SO1: THIS SHEET ISSUED 9-1-95.

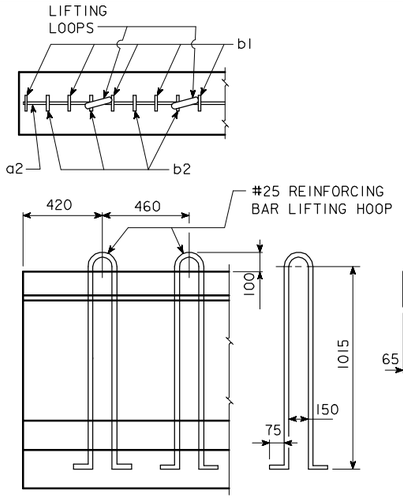

LIFTING LOOP DETAIL

ALTERNATE TYPES MAY BE SUBSTITUTED WITH THE APPROVAL OF THE ENGINEER. LIFTING LOOPS ARE TO BE STRUCTURAL GRADE.

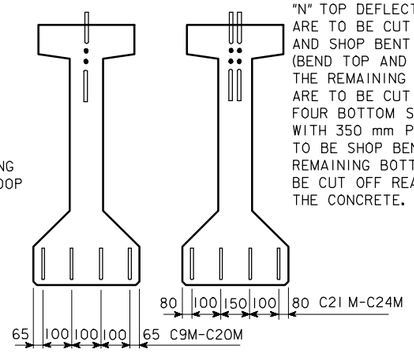

"N" TOP DEFLECTED OR STRAIGHT STRANDS ARE TO BE CUT WITH 350 mm PROJECTIONS AND SHOP BENT UP OR DOWN AS SHOWN (BEND TOP AND BOTTOM ROWS).
THE REMAINING TOP DEFLECTED STRANDS ARE TO BE CUT WITH 175 mm PROJECTIONS.
FOUR BOTTOM STRANDS ARE TO BE CUT WITH 350 mm PROJECTIONS WHICH ARE TO BE SHOP BENT AS SHOWN. THE REMAINING BOTTOM STRANDS ARE TO BE CUT OFF REASONABLY FLUSH WITH THE CONCRETE.

BEAM	"N"
C9M-C20M	2
C21 M-C24M	4

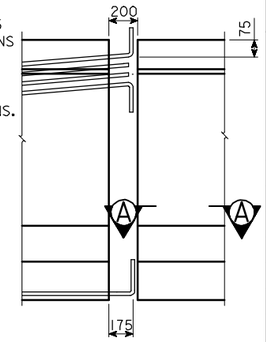

STRAND PROJECTION AT BEAM ENDS WHEN EMBEDDED IN CONCRETE END DIAPHRAGMS

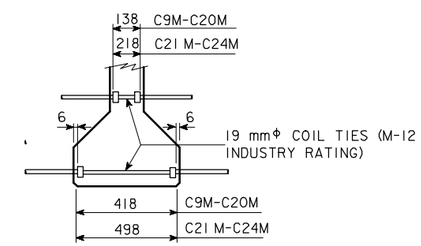

COIL TIE DETAIL

NUMBER AND EXACT LOCATION OF COIL TIES TO BE AS DETAILED ON SPECIFIC BRIDGE DESIGN.

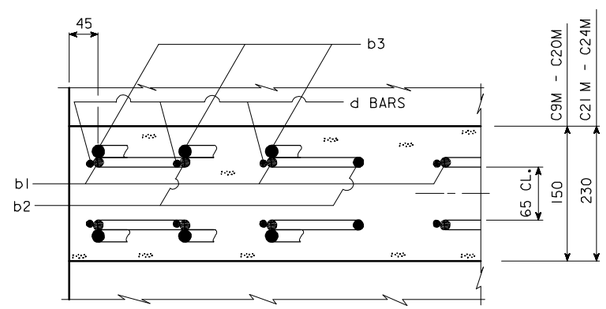

SECTION A-A SHOWING PLACEMENT OF STIRRUPS NEAR END OF BEAM

CM BEAM DATA

BEAM	SPAN LENGTH ℄-℄ BEARING	OVERALL BEAM LENGTH (L)	STRAND SIZE (mm)	NO. OF STRANDS STRAIGHT	NO. OF STRANDS DEFLECTED	TOTAL INITIAL PRESTRESS ③ kN	HOLD DOWN FORCE-kN	CAMBER (mm) AT RELEASE	CAMBER (mm) AFTER LOSSES	DEFLECTION (mm) Δ_D IMMEDIATE ① (ELASTIC) Δ_I CONC. DIAPH.	DEFLECTION IMMEDIATE ① STEEL DIAPH.	DEFLECTION TIME ② (PLASTIC) Δ_T CONC. DIAPH.	DEFLECTION TIME ② STEEL DIAPH.	PERMISSIBLE SPACING		PERMISSIBLE SPACING MS18 LOADING CONC. DIAPH.	PERMISSIBLE SPACING MS18 LOADING STEEL DIAPH.	MASS (kg)	CONCRETE (m^3)	REINFORCING STEEL (MASS - kg)
C9M	9500	9800	12.7Φ	10	0	1334	0	2	4	1	1	0	0			2200	2200	6500	2.7	162
C11 M	11 000	11 300	12.7Φ	11	0	1468	0	3	6	2	2	1	1			2200	2200	7400	3.1	184
C12M	12 500	12 800	12.7Φ	13	0	1735	0	5	9	3	3	1	1			2200	2200	8400	3.5	204
C14M	14 000	14 300	12.7Φ	8	3	1468	71	8	14	5	4	1	1			2200	2200	9400	3.9	218
C15M	15 500	15 800	12.7Φ	10	3	1735	65	12	21	7	7	2	2			2200	2200	10 400	4.3	247
C17M	17 000	17 300	12.7Φ	14	3	2269	53	16	28	11	10	3	3			2200	2200	11 400	4.7	285
C18M	18 500	18 800	12.7Φ	14	5	2535	81	20	35	15	13	4	3			2200	2200	12 400	5.2	306
C20M	20 000	20 300	12.7Φ	16	5	2802	71	26	45	20	18	5	5			2200	2200	13 400	5.6	321
C21 M	21 500	21 800	12.7Φ	18	6	3203	90	27	48	21	19	5	5			2200	2200	19 100	8.0	376
C23M	23 000	23 300	12.7Φ	20	6	3583	82	33	59	27	25	7	6			2200	2200	20 400	8.5	409
C24M	24 500	24 800	12.7Φ	18	12	4135	144	33	57	34	33	9	8			2200	2200	21 800	9.1	432

① DEFLECTIONS AT MID-SPAN DUE TO WEIGHT OF SLAB AND DIAPHRAGM. THE DEFLECTIONS SHOWN ARE FOR A SLAB WEIGHT OF 10.7 kN/m. (200 mm SLAB AND 2200 mm BEAM SPACING) AND ONE CONCRETE DIAPHRAGM (11.2 kN) OR ONE STEEL DIAPHRAGM (1.22 kN) AT ℄ OF SPAN. FOR DIFFERENT SLAB AND DIAPHRAGM WEIGHTS, DEFLECTIONS WILL BE DIRECTLY PROPORTIONAL.

② DEFLECTIONS DUE TO THE COMBINED EFFECT OF CREEP DUE TO WEIGHT OF SLAB AND SHRINKAGE OF SLAB.

TOTAL BEAM DEFLECTIONS AT ℄ OF SPAN, Δ_D, DUE TO WEIGHT OF SLAB AND DIAPHRAGMS FOR DETAILING PURPOSE:
(A) $\Delta_D = \Delta_I + \Delta_T$ FOR SIMPLE SPAN.
(B) $\Delta_D = \Delta_I + \frac{3}{4}\Delta_T$ FOR END SPANS OF CONTINUOUS BRIDGE.
(C) $\Delta_D = \Delta_I + \frac{1}{2}\Delta_T$ FOR INTERIOR SPANS OF CONTINUOUS BRIDGE.

③ TOTAL INITIAL PRESTRESS FOR C9M THRU C21M INCLUSIVE IS BASED ON 72.622% f's, AND FOR C23M AND C24M ON 75% f's. f's = 1860 MPa AND As = 98.71 mm².

NOTES:

THESE BEAMS ARE DESIGNED FOR AASHTO LIVE LOADS AS INDICATED IN ABOVE TABLE WITH AN ALLOWANCE OF 960 Pa FOR FUTURE WEARING SURFACE.

HOLD DOWN POINTS FOR DEFLECTED STRANDS MAY BE MOVED TOWARD ENDS OF BEAM A DISTANCE OF 0.05 SPAN LENGTH MAXIMUM AT PRODUCER'S OPTION.

ALL PRESTRESSING STRANDS SHALL CONFORM TO ASTM A416 GRADE 270 LOW RELAXATION STRANDS.

TOPS OF BEAMS ARE TO BE STRUCK OFF LEVEL AND INTENTIONALLY ROUGHENED TRANSVERSELY TO A FULL AMPLITUDE OF APPROXIMATELY 6 mm EXCEPT A 50 mm WIDE FINISH SHALL BE PROVIDED ON THE TOP EDGE ON ONE SIDE ONLY OF THE BEAM.

BEARINGS SHALL BE AS DETAILED ON OTHER DESIGN SHEETS. BEAMS TO BE USED IN BRIDGES MADE CONTINUOUS BY THE POURED IN PLACE FLOOR, ARE TO BE AT LEAST 28 DAYS OLD BEFORE THE FLOOR IS PLACED UNLESS A SHORTER CURING TIME IS APPROVED BY THE BRIDGE ENGINEER.

THE PORTIONS OF THE PRESTRESS BEAMS THAT ARE TO BE EMBEDDED IN THE ABUTMENT AND PIER DIAPHRAGMS SHALL BE ROUGHENED FOR A DISTANCE OF 250 mm FROM THE BEAM END BY SANDBLASTING OR OTHER APPROVED METHODS TO PROVIDE SUITABLE BOND BETWEEN THE BEAM AND THE DIAPHRAGM IN ACCORDANCE WITH ARTICLE 2403.14 OF THE METRIC SPECIFICATIONS.

UNLESS OTHERWISE NOTED ALL BEAMS ARE TO BE INCREASED IN LENGTH BY .0005L TO COMPENSATE FOR ELASTIC SHORTENING, CREEP AND SHRINKAGE.

IF THE PRECAST PANEL OPTION IS ALLOWED AND USED FOR BRIDGE DECK FORMATION, THE BEAM STIRRUPS WILL NEED TO BE EXTENDED AND TOP FLANGE BEAM FINISH SHALL BE MODIFIED AS PER DETAILS ON THE PRECAST DECK PANEL SHEET.

IF THE STEEL DIAPHRAGM OPTION IS ALLOWED AND USED, HOLES MUST BE CAST IN THE WEB TO ACCOMMODATE THE STEEL DIAPHRAGM ATTACHMENTS AS DETAILED ON THE STEEL DIAPHRAGM DETAIL SHEET.

IF SOLE PLATE IS REQUIRED FOR BEARING, SOLE PLATE IS TO BE SET IN FORMS WHEN BEAM IS CAST AND FORMED OUT BELOW TO EXCLUDE CONCRETE AS DETAILED ON THE BEARING SHEET.

IF STUB ABUTMENTS ARE USED, ALL STRANDS AT THE ENDS OF BEAMS AT STUB ABUTMENTS SHALL BE CUT OFF REASONABLY FLUSH WITH THE CONCRETE.

ALL DIMENSIONS ARE IN MILLIMETERS (mm) UNLESS OTHERWISE NOTED OR SHOWN.

SPECIFICATIONS:

CONSTRUCTION: STANDARD SPECIFICATIONS OF THE IOWA DEPARTMENT OF TRANSPORTATION, CURRENT SERIES, WITH CURRENT APPLICABLE SPECIAL PROVISIONS AND SUPPLEMENTAL SPECIFICATIONS.
DESIGN: AASHTO, SERIES OF 1992 WITH MINOR MODIFICATIONS.

DESIGN STRESSES:

DESIGN STRESSES FOR THE FOLLOWING MATERIALS ARE TO BE IN ACCORDANCE WITH AASHTO STANDARD SPECIFICATIONS FOR HIGHWAY BRIDGES, SERIES OF 1992. DESIGN STRESS INFORMATION HAS BEEN CONVERTED TO A METRIC VERSION.

REINFORCING STEEL IN ACCORDANCE WITH SECTION 8, GRADE 400.

CONCRETE IN ACCORDANCE WITH SECTION 9, f'c = 35 MPa .

PRESTRESSING STEEL IN ACCORDANCE WITH SECTION 9, GRADE 270.

ΔΔ b1 BARS TO BE EPOXY COATED.

* WHERE DEFLECTING STRANDS INTERFERE WITH PLACEMENT, SOME IN-PLACE BENDING MAY BE NECESSARY.

NOTES: (CONTINUED)

12.7 mm DIAMETER STRANDS STRESSED TO NOT MORE THAN 14 kN EACH MAY BE USED IN LIEU OF THE a BARS WHICH RUN THE FULL LENGTH OF THE BEAM IN THE TOP FLANGE.

WHEN EXPANSION JOINTS ARE USED, CONCRETE SEALER SHALL BE APPLIED TO THE PRESTRESSED BEAM END SECTION. THE SEALING SHALL BE IN ACCORDANCE WITH MATERIALS I.M. 570 AND 491.12.

REINFORCING BAR LIST

	BEAM / SPAN			C9M 9500		C11M 11 000		C12M 12 500		C14M 14 000		C15M 15 500		C17M 17 000		C18M 18 500		C20M 20 000		C21M 21 500		C23M 23 000		C24M 24 500	
	MARK	SIZE	SHAPE	NO.	LENGTH	NO.	LENGTH	NO.	LENGTH	NO.	LENGTH	NO.	LENGTH	NO.	LENGTH	NO.	LENGTH	NO.	LENGTH	NO.	LENGTH	NO.	LENGTH	NO.	LENGTH
	a1	19	—	2	9720	2	11 220	4	6920	4	7670	4	8420	4	9170	4	9920	4	10 670	4	11 420	4	12 170	4	12 920
	a2	13	—	2	1220	2	1220	2	1220	2	1220	2	1220	2	1220	2	1220	2	1220	2	1220	2	1220	2	1220
	a3	25	—	—	—	—	—	—	—	—	—	—	—	—	—	—	—	—	—	—	—	—	—	2	12 200
ΔΔ	b1	13	⊂⊃	26	2660	30	2660	32	2660	34	2660	38	2660	44	2660	46	2660	48	2660	54	2660	58	2660	60	2660
	b2	13	⊂⊃	4	2190	4	2190	4	2190	4	2190	6	2190	8	2190	10	2190	10	2190	10	2190	10	2190	10	2190
	b3	19	⌒	—	—	—	—	—	—	—	—	—	—	—	—	—	—	—	—	8	1140	12	1140	16	1140
	c1	10	⊓	26	430	30	430	32	430	34	430	38	430	44	430	46	430	48	430	—	—	—	—	—	—
	c2	10	⊓	—	—	—	—	—	—	—	—	—	—	—	—	—	—	—	—	54	460	58	460	60	460
*	d1	10	⌐	60	870	68	870	72	870	76	870	88	870	104	870	112	870	116	870	—	—	—	—	—	—
*	d2	10	⌐	—	—	—	—	—	—	—	—	—	—	—	—	—	—	—	—	128	920	136	920	140	920
	e1	10	⊓	6	500	6	500	8	500	8	500	8	500	16	500	16	500	18	500	—	—	—	—	—	—
	e2	10	⊓	—	—	—	—	—	—	—	—	—	—	—	—	—	—	—	—	16	550	18	550	18	550

BENT BAR DETAILS

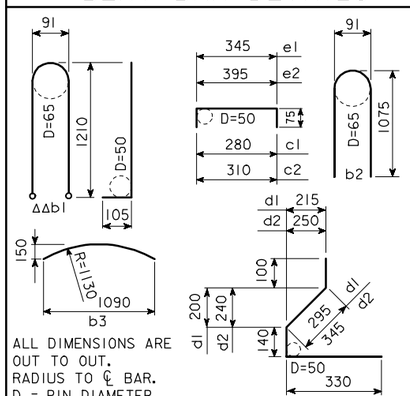

ALL DIMENSIONS ARE OUT TO OUT.
RADIUS TO ℄ BAR.
D = PIN DIAMETER.

CM BEAM DETAILS

IOWA DEPARTMENT OF TRANSPORTATION - HIGHWAY DIVISION

DESIGN SHEET NO. ____ OF ____ FILE NO. _____ DESIGN NO. _____

REVISED 05-04 - BARS b1 CHANGED TO EPOXY COATED. a1, b3 CHANGED TO 19; a2 TO 16; a3 TO 25; b1, b2 TO 13.
HM4620.SOI : THIS SHEET ISSUED 9-1-95.

DESIGN TEAM	CM BEAMS	STANDARD SHEET M4620	COUNTY	PROJECT NUMBER	SHEET NUMBER

10-FEB-2006 13:56 ajeffer W:\Projects\0000006002\BRFinal\MetricBeams.dgn m4620

NOTE: DIMENSIONS FOR THE LOCATION OF THE DEFLECTED STRANDS ARE AT ℄ BEAM AND END OF BEAM.

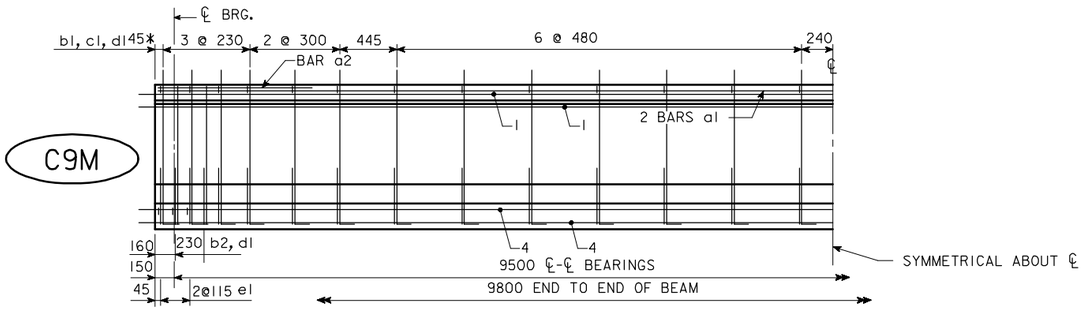

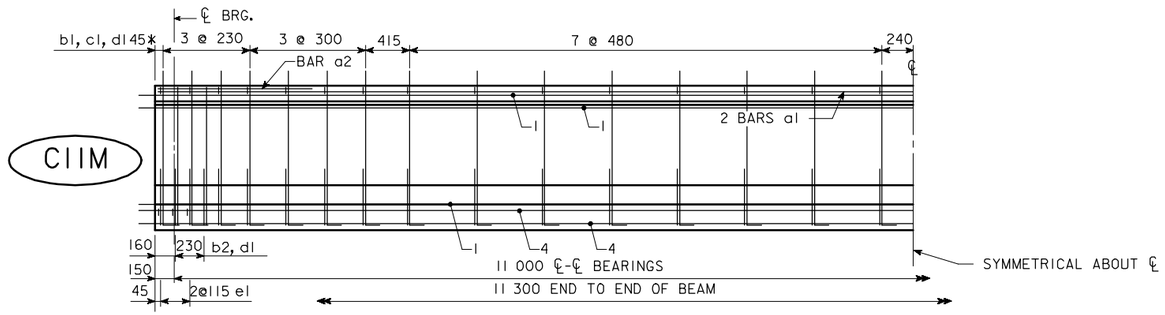

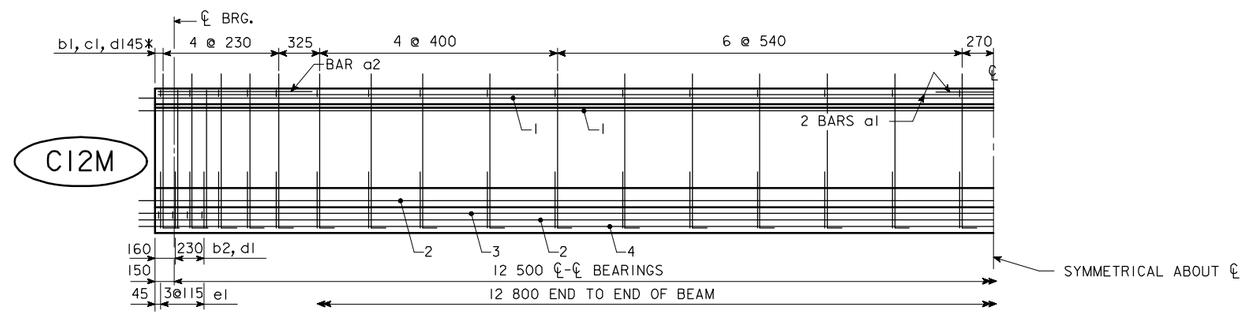

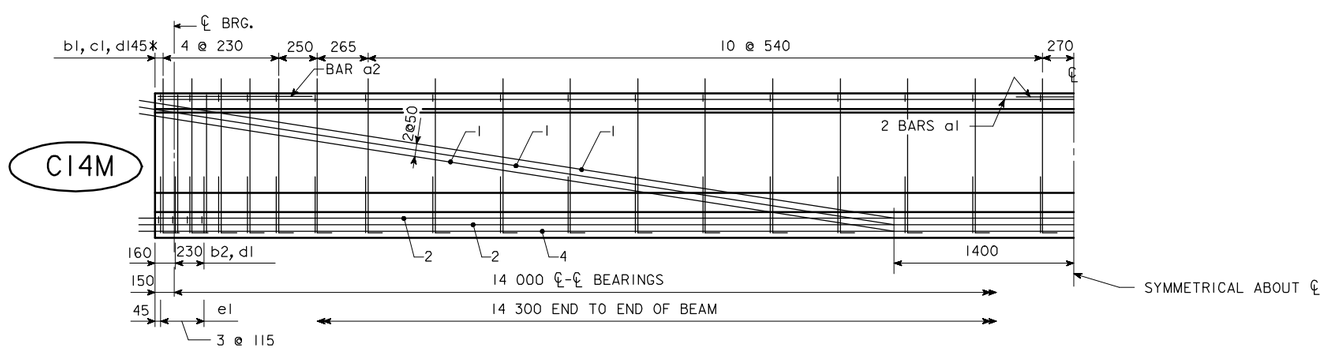

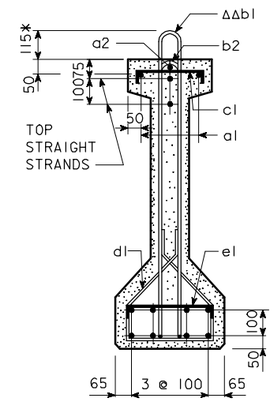

BEAM C9M

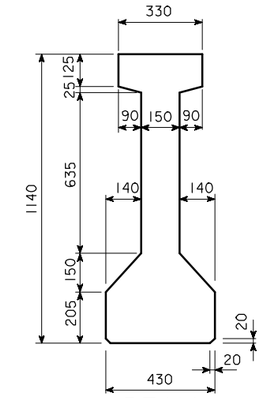

BEAM
C9M - C14M

A = 273 750 mm²
Y_b = 494 mm
I = 37 917 850 000 mm⁴

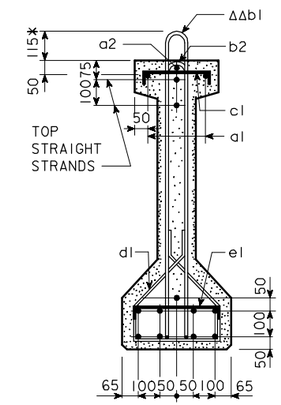

BEAM C11M

NOTE: BARS d1 ARE TO BE PLACED IN PAIRS.

○ DEFLECTED STRANDS
* KEEP
Δ DIMENSIONS AT END OF BEAM.
ΔΔ EPOXY COATED BARS

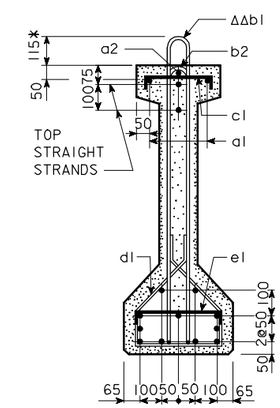

BEAM C12M

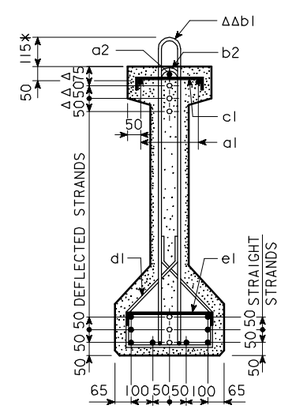

BEAM C14M

C9M-C14M BEAM DETAILS

IOWA DEPARTMENT OF TRANSPORTATION - HIGHWAY DIVISION
DESIGN SHEET NO. ____ OF ____ FILE NO. _____ DESIGN NO. _____

REVISED 05-04 - BARS b1 CHANGED TO EPOXY COATED.
HM4621.S01: THIS SHEET ISSUED 9-1-95.

DESIGN TEAM	CM BEAMS	STANDARD SHEET M4621	COUNTY	PROJECT NUMBER	SHEET NUMBER

10-FEB-2006 13:56 ajeffer W:\Projects\0000006002\BRFinal\MetricBeams.dgn m4621

NOTE: DIMENSIONS FOR THE LOCATION OF THE DEFLECTED STRANDS ARE AT ℄ BEAM AND END OF BEAM.

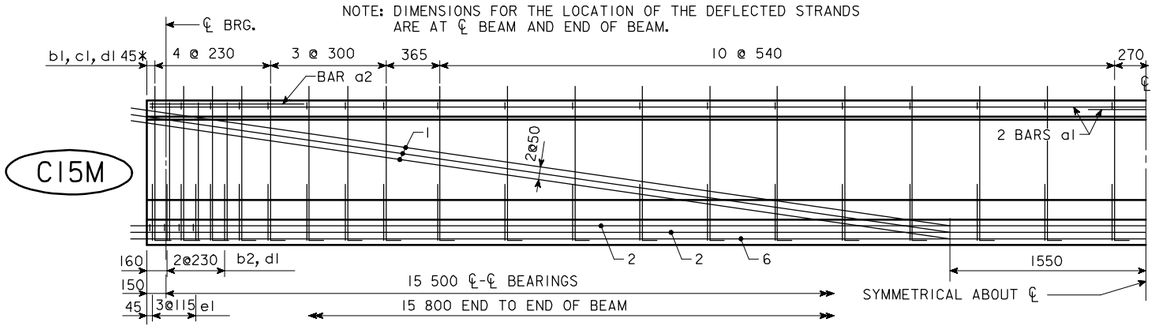

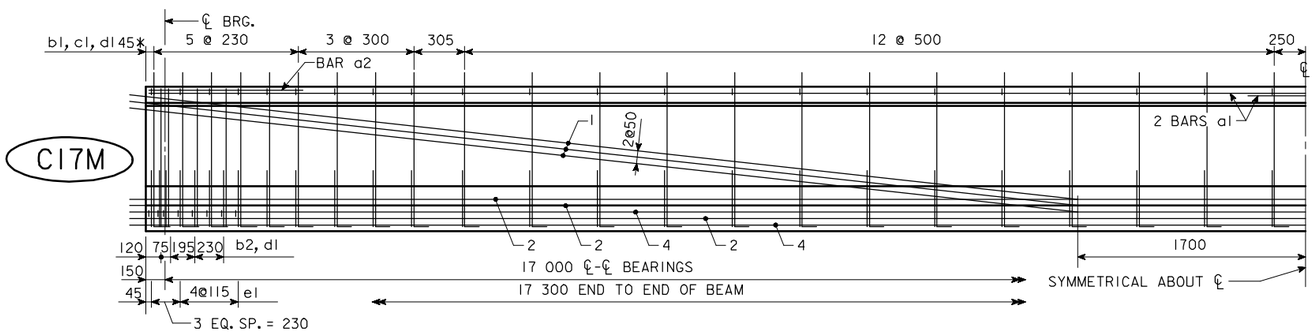

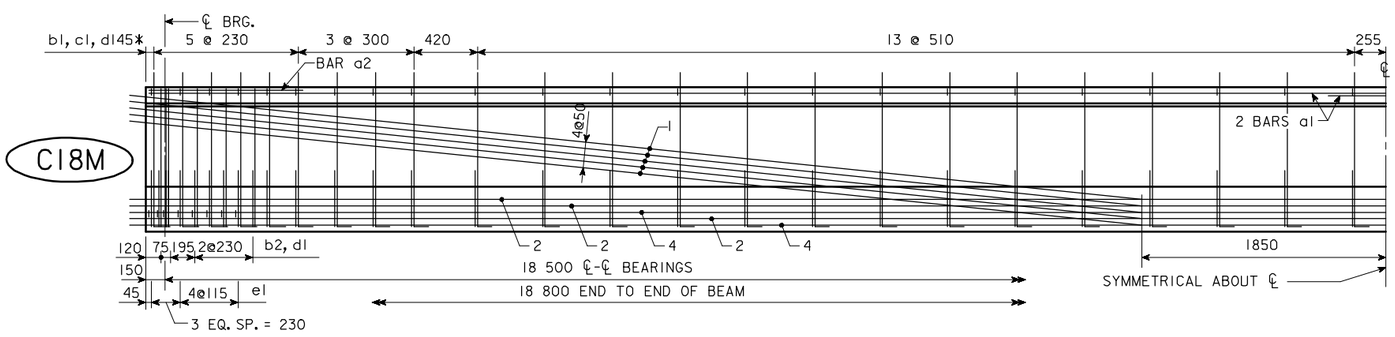

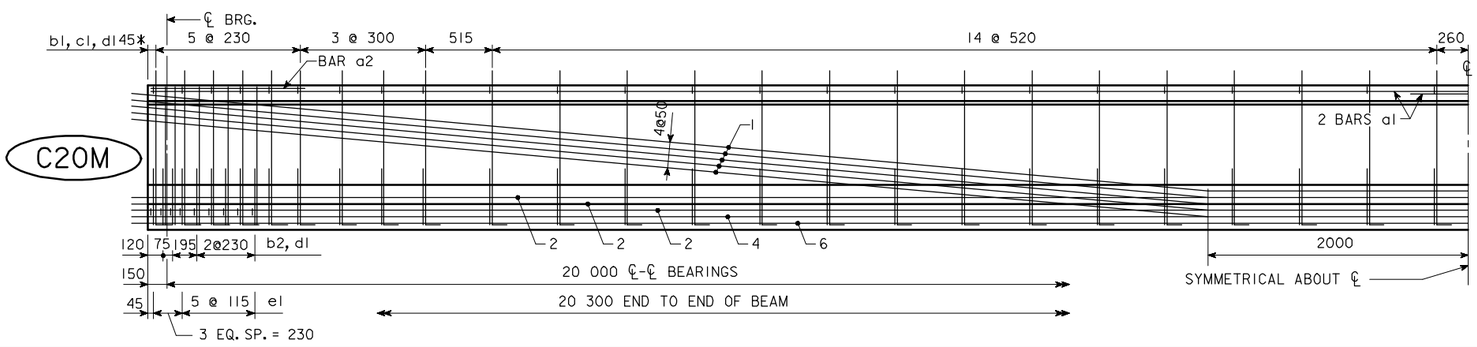

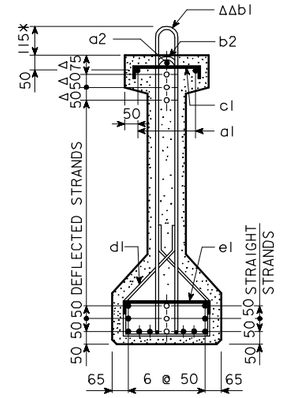

BEAM C15M

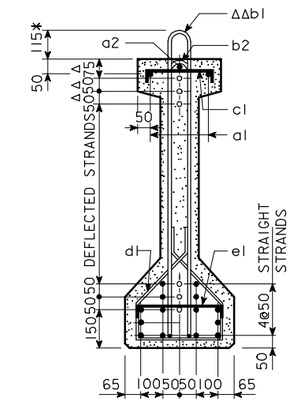

BEAM C17M

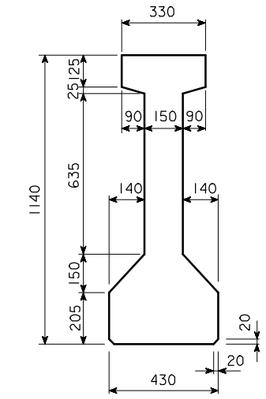

BEAM
C15M - C20M

A = 273 750 mm²
Y_b = 494 mm
I = 37 917 850 000 mm⁴

NOTE: BARS d1 ARE TO BE PLACED IN PAIRS.

○ DEFLECTED STRANDS
* KEEP
Δ DIMENSIONS AT END OF BEAM
ΔΔ EPOXY COATED BARS

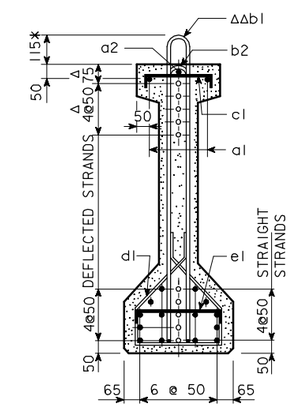

BEAM C18M

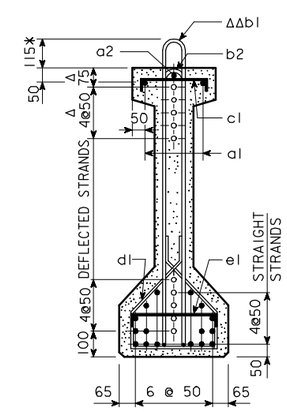

BEAM C20M

C15M-C20M BEAM DETAILS

IOWA DEPARTMENT OF TRANSPORTATION - HIGHWAY DIVISION

DESIGN SHEET NO. ____ OF ____ FILE NO. _____ DESIGN NO. _____

DESIGN TEAM	CM BEAMS	STANDARD SHEET M4622	COUNTY	PROJECT NUMBER	SHEET NUMBER

REVISED 05-04 - BARS b1 CHANGED TO EPOXY COATED.
HM4622.SOI: THIS SHEET ISSUED 9-1-95.

10-FEB-2006 13:57 ajeffer W:\Projects\0000006002\BRFinal\MetricBeams.dgn m4622

NOTE: DIMENSIONS FOR THE LOCATION OF THE DEFLECTED STRANDS ARE AT ℄ BEAM AND END OF BEAM.

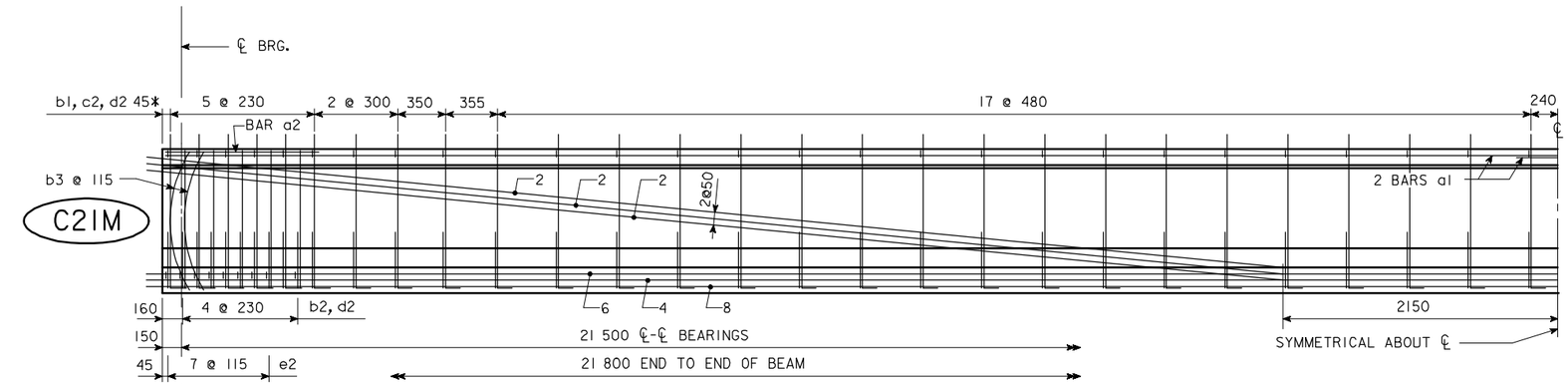

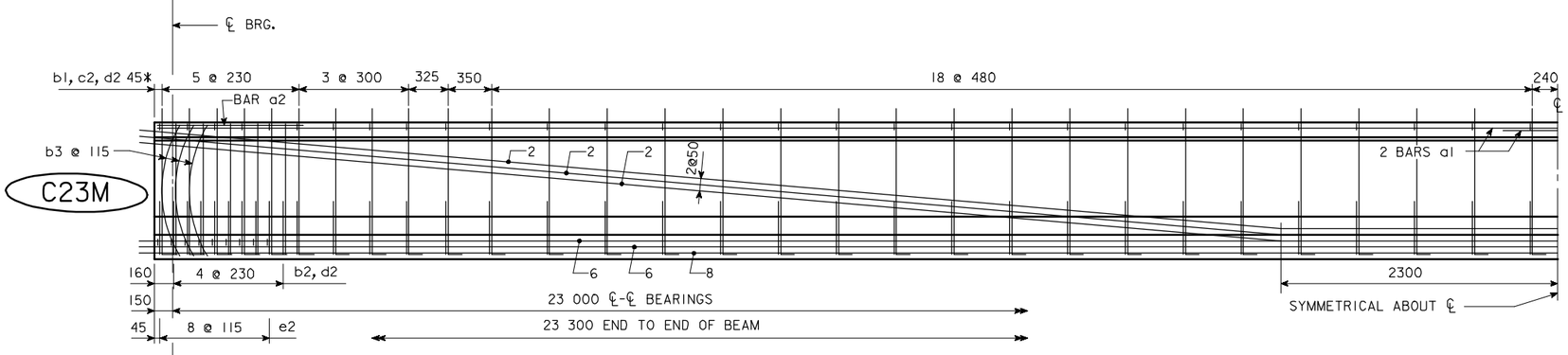

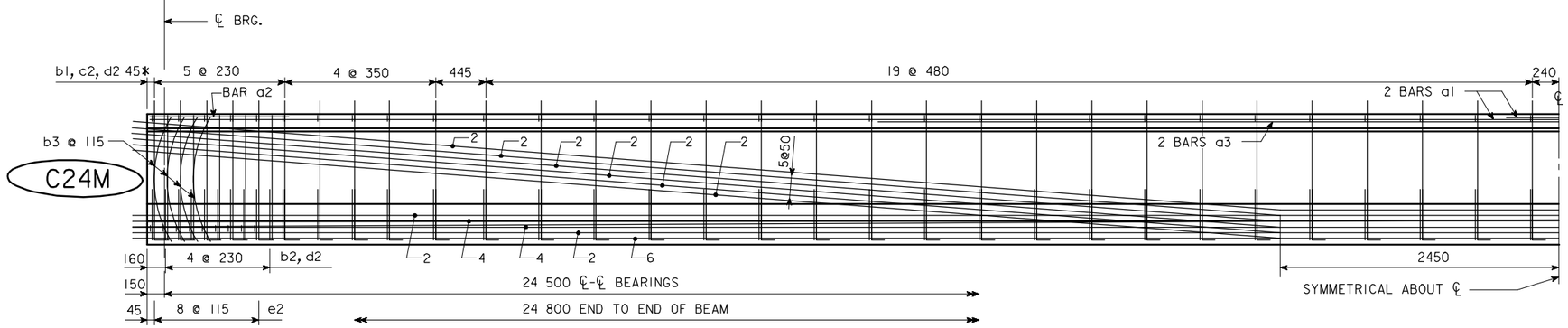

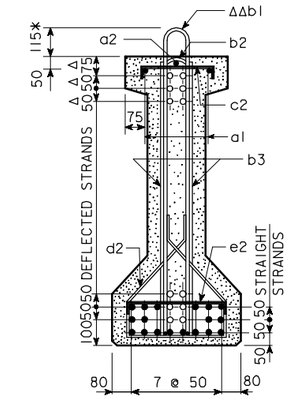

BEAM C21M

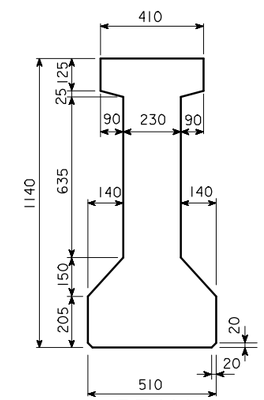

BEAM C21M - C24M

A = 364 950 mm²
Y_b = 513 mm
I = 48 190 860 000 mm⁴

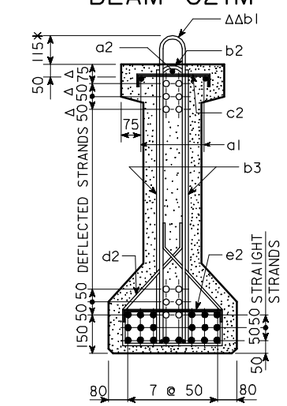

BEAM C23M

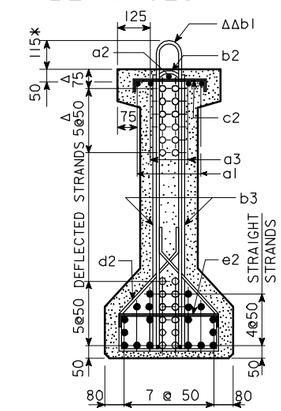

BEAM C24M

NOTE: BARS b3 AND d2 ARE TO BE PLACED IN PAIRS.

○ DEFLECTED STRANDS
* KEEP
Δ DIMENSIONS AT END OF BEAM.
ΔΔ EPOXY COATED BARS

C21M-C24M BEAM DETAILS

IOWA DEPARTMENT OF TRANSPORTATION - HIGHWAY DIVISION

DESIGN SHEET NO. ____ OF ____ FILE NO. _____ DESIGN NO. _____

REVISED 05-04 - BARS b1 CHANGED TO EPOXY COATED.
HN4623.SOI: THIS SHEET ISSUED 9-1-95.

DESIGN TEAM	CM BEAMS	STANDARD SHEET M4623	COUNTY	PROJECT NUMBER	SHEET NUMBER

10-FEB-2006 13:57 ajeffer W:\Projects\0000006002\BRFinal\MetricBeams.dgn m4623

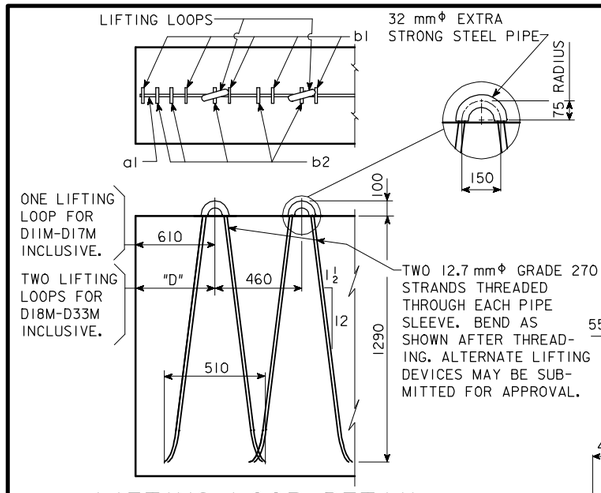

LIFTING LOOP DETAIL

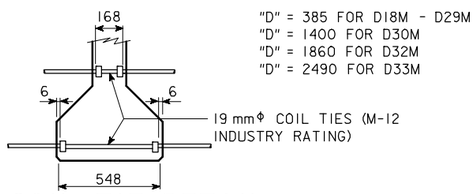

"D" = 385 FOR D18M - D29M
"D" = 1400 FOR D30M
"D" = 1860 FOR D32M
"D" = 2490 FOR D33M

COIL TIE DETAIL

NUMBER AND EXACT LOCATION OF COIL TIES TO BE AS DETAILED ON SPECIFIC BRIDGE DESIGN.

SPECIFICATIONS:

CONSTRUCTION: STANDARD SPECIFICATIONS OF THE IOWA DEPARTMENT OF TRANSPORTATION, CURRENT SERIES, WITH CURRENT APPLICABLE SPECIAL PROVISIONS AND SUPPLEMENTAL SPECIFICATIONS.
DESIGN: AASHTO, SERIES OF 1992 WITH MINOR MODIFICATIONS.

DESIGN STRESSES:

DESIGN STRESSES FOR THE FOLLOWING MATERIALS ARE TO BE IN ACCORDANCE WITH AASHTO STANDARD SPECIFICATIONS FOR HIGHWAY BRIDGES, SERIES OF 1992. DESIGN STRESS INFORMATION HAS BEEN CONVERTED TO A METRIC VERSION.

REINFORCING STEEL IN ACCORDANCE WITH SECTION 8, GRADE 400.

CONCRETE IN ACCORDANCE WITH SECTION 9, f'c = 35 MPa. (EXCEPT AS NOTED).

PRESTRESSING STEEL IN ACCORDANCE WITH SECTION 9, GRADE 270.

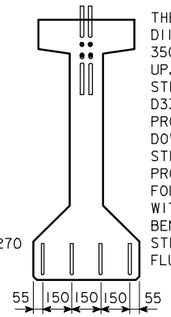

THE TOP STRAIGHT STRANDS OF BEAMS D11M THROUGH D18M ARE TO BE CUT WITH 350 mm PROJECTIONS AND SHOP BENT UP. THE TOP AND BOTTOM DEFLECTED STRANDS OF BEAMS D20M THROUGH D33M ARE TO BE CUT WITH 350 mm PROJECTIONS AND SHOP BENT UP OR DOWN AS SHOWN. THE REMAINING TOP STRANDS ARE TO BE CUT WITH 175 mm PROJECTIONS.
FOUR BOTTOM STRANDS ARE TO BE CUT WITH 350 mm PROJECTIONS AND SHOP BENT AS SHOWN. THE REMAINING BOTTOM STRANDS SHALL BE CUT OFF REASONABLY FLUSH WITH THE CONCRETE.

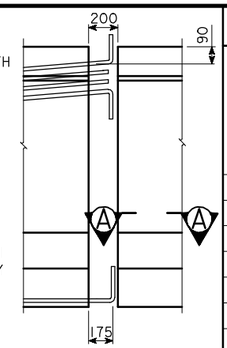

STRAND PROJECTION AT BEAM ENDS WHEN EMBEDDED IN CONCRETE END DIAPHRAGMS

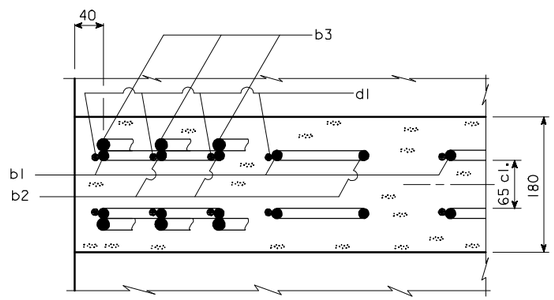

SECTION A-A SHOWING PLACEMENT OF STIRRUPS NEAR END OF BEAM

BENT BAR DETAILS

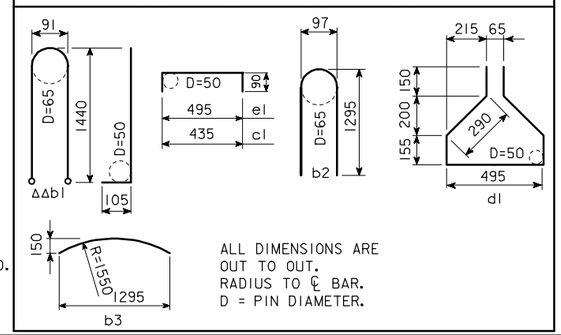

ALL DIMENSIONS ARE OUT TO OUT.
RADIUS TO ℄ BAR.
D = PIN DIAMETER.

ΔΔ b1 BARS TO BE EPOXY COATED.

DM BEAM DATA

	BEAM	SPAN LENGTH ℄-℄ BEARING	OVERALL BEAM LENGTH (L)	STRAND SIZE (mm)	NO. OF STRANDS STRAIGHT	NO. OF STRANDS DEFLECTED	TOTAL INITIAL PRESTRESS ③ kN	HOLD DOWN FORCE-kN	CAMBER (mm) AT RELEASE	CAMBER (mm) AFTER LOSSES	DEFLECTION (mm) Δ_D IMMEDIATE① (ELASTIC) Δ_I CONC. DIAPH.	IMMEDIATE STEEL DIAPH.	TIME ② (PLASTIC) Δ_T CONC. DIAPH.	TIME STEEL DIAPH.	PERMISSIBLE SPACING		MS18 LOADING CONC. DIAPH.	MS18 LOADING STEEL DIAPH.	MASS (kg)	CONCRETE (m^3)	REINFORCING STEEL (MASS - kg)
	D11M	11 000	11 300	12.7Φ	14	0	1868	0	2	4	1	1	0	0			2200	2200	11 200	4.7	185
	D12M	12 500	12 800	12.7Φ	14	0	1868	0	3	5	1	1	0	0			2200	2200	12 700	5.3	202
	D14M	14 000	14 300	12.7Φ	14	0	1868	0	3	5	2	2	1	1			2200	2200	14 200	5.9	212
	D15M	15 500	15 800	12.7Φ	16	0	2135	0	4	8	3	3	1	1			2200	2200	15 700	6.5	229
	D17M	17 000	17 300	12.7Φ	17	0	2269	0	4	6	5	4	1	1			2200	2200	17 200	7.2	263
	D18M	18 500	18 800	12.7Φ	19	0	2535	0	5	9	7	6	2	2			2200	2200	18 700	7.8	281
	D20M	20 000	20 300	12.7Φ	10	6	2135	114	9	16	9	8	2	2			2200	2200	20 200	8.4	368
	D21M	21 500	21 800	12.7Φ	14	6	2669	106	15	26	12	11	3	3			2200	2200	21 700	9.0	409
	D23M	23 000	23 300	12.7Φ	14	8	2936	127	16	28	15	14	4	4			2200	2200	23 200	9.6	436
	D24M	24 500	24 800	12.7Φ	18	6	3203	98	23	41	19	18	5	5			2200	2200	24 700	10.3	459
	D26M	26 000	26 300	12.7Φ	18	8	3470	124	25	44	24	23	6	6			2200	2200	26 200	10.9	481
	D27M	27 500	27 800	12.7Φ	20	8	3859	121	32	55	30	28	8	7			2200	2200	27 600	11.5	575
	D29M	29 000	29 300	12.7Φ	24	8	4410	115	41	73	36	34	9	9			2200	2200	29 100	12.1	640
*	D30M	30 500	30 800	12.7Φ	28	8	4961	109	48	84	41	39	10	10			2200	2200	30 600	12.7	652
*	D32M	32 000	32 300	12.7Φ	30	10	5513	125	55	97	49	47	12	12			2200	2200	32 100	13.4	690
⊙	D33M	33 500	33 800	12.7Φ	32	14	6340	151	59	103	54	52	14	13			2200	2200	33 600	14.0	716

① DEFLECTIONS AT MID-SPAN DUE TO WEIGHT OF SLAB AND DIAPHRAGM. THE DEFLECTIONS SHOWN ARE FOR A SLAB WEIGHT OF 10.7 kN/m. (200 mm SLAB AND 2200 mm BEAM SPACING) AND ONE CONCRETE DIAPHRAGM (13.6 kN) OR ONE STEEL DIAPHRAGM (1.22 kN) AT ℄ OF SPAN. FOR DIFFERENT SLAB AND DIAPHRAGM WEIGHTS, DEFLECTIONS WILL BE DIRECTLY PROPORTIONAL.

② DEFLECTIONS DUE TO THE COMBINED EFFECT OF CREEP DUE TO WEIGHT OF SLAB AND SHRINKAGE OF SLAB.

TOTAL BEAM DEFLECTIONS AT ℄ OF SPAN, Δ_D, DUE TO WEIGHT OF SLAB AND DIAPHRAGMS FOR DETAILING PURPOSE:

(A) $\Delta_D = \Delta_I + \Delta_T$ FOR SIMPLE SPAN.
(B) $\Delta_D = \Delta_I + \frac{3}{4}\Delta_T$ FOR END SPANS OF CONTINUOUS BRIDGE.
(C) $\Delta_D = \Delta_I + \frac{1}{2}\Delta_T$ FOR INTERIOR SPANS OF CONTINUOUS BRIDGE.

③ TOTAL INITIAL PRESTRESS FOR D11M THRU D26M INCLUSIVE IS BASED ON 72.622% f's, AND FOR D27M THRU D33M ON 75% f's. f's = 1860 MPa AND As = 98.71 mm^2.

* MINIMUM CONCRETE f'c (AT 28 DAYS) SHALL BE 41 MPa. MINIMUM f'ci AT RELEASE SHALL BE 35 MPa.

⊙ MINIMUM CONCRETE f'c (AT 28 DAYS) SHALL BE 48 MPa. MINIMUM f'ci AT RELEASE SHALL BE 41 MPa.

NOTES: (CONTINUED)

THE CONTRACTOR SHALL ASSURE THE LATERAL STABILITY OF THE D30M, D32M, AND D33M BEAMS DURING HANDLING, TRANSPORTING AND ERECTION BY PROVIDING TEMPORARY BRACING AS NEEDED.

FOR TRANSPORTING, THE OVERHANG SHALL BE IN ACCORDANCE WITH ARTICLE 2407.13 OF THE SPECIFICATIONS, EXCEPT THE OVERHANG MAY BE INCREASED TO A MAXIMUM OF 2440 mm FOR THE D26M BEAM, 2740 mm FOR THE D27M BEAM, 3350 mm FOR THE D29M BEAM, 2700 mm FOR THE D30M BEAM, 1500 mm FOR THE D32M BEAM, AND 3600 mm FOR THE D33M BEAM.

IF BEAM CONCRETE STRENGTH f'c = 52 MPa, THEN BEAM OVERHANG MAY BE INCREASED AS FOLLOWS: 3600 mm FOR THE D30M BEAM, 3600 mm FOR THE D32M BEAM, AND 4200 mm FOR THE D33M BEAM.

WHEN EXPANSION JOINTS ARE USED, CONCRETE SEALER SHALL BE APPLIED TO THE PRESTRESSED BEAM END SECTION. THE SEALING SHALL BE IN ACCORDANCE WITH MATERIALS I.M. 570 AND 491.12.

NOTES:

THESE BEAMS ARE DESIGNED FOR AASHTO LIVE LOADS AS INDICATED IN ABOVE TABLE WITH AN ALLOWANCE OF 960 Pa FOR FUTURE WEARING SURFACE.

HOLD DOWN POINTS FOR DEFLECTED STRANDS MAY BE MOVED TOWARD ENDS OF BEAM A DISTANCE OF 0.05 SPAN LENGTH MAXIMUM AT PRODUCER'S OPTION.

ALL PRESTRESSING STRANDS SHALL CONFORM TO ASTM A416 GRADE 270 LOW RELAXATION STRANDS.

TOPS OF BEAMS ARE TO BE STRUCK OFF LEVEL AND INTENTIONALLY ROUGHENED TRANSVERSELY TO A FULL AMPLITUDE OF APPROXIMATELY 6 mm EXCEPT A 50 mm WIDE FINISH SHALL BE PROVIDED ON THE TOP EDGE ON ONE SIDE ONLY OF THE BEAM.

BEARINGS SHALL BE AS DETAILED ON OTHER DESIGN SHEETS.

BEAMS TO BE USED IN BRIDGES MADE CONTINUOUS BY THE POURED IN PLACE FLOOR, ARE TO BE AT LEAST 28 DAYS OLD BEFORE THE FLOOR IS PLACED UNLESS A SHORTER CURING TIME IS APPROVED BY THE ENGINEER.

THE PORTIONS OF THE PRESTRESS BEAMS THAT ARE TO BE EMBEDDED IN THE ABUTMENT AND PIER DIAPHRAGMS SHALL BE ROUGHENED FOR A DISTANCE OF 250 mm FROM THE BEAM END BY SANDBLASTING OR OTHER APPROVED METHODS TO PROVIDE SUITABLE BOND BETWEEN THE BEAM AND THE DIAPHRAGM IN ACCORDANCE WITH ARTICLE 2403.14 OF THE METRIC SPECIFICATIONS.

UNLESS OTHERWISE NOTED ALL BEAMS ARE TO BE INCREASED IN LENGTH BY .0005L TO COMPENSATE FOR ELASTIC SHORTENING, CREEP AND SHRINKAGE.

IF THE PRECAST PANEL OPTION IS ALLOWED AND USED FOR BRIDGE DECK FORMATION, THE BEAM STIRRUPS WILL NEED TO BE EXTENDED AND TOP FLANGE BEAM FINISH SHALL BE MODIFIED AS PER DETAILS ON THE PRECAST DECK PANEL SHEET.

IF THE STEEL DIAPHRAGM OPTION IS ALLOWED AND USED, HOLES MUST BE CAST IN THE WEB TO ACCOMMODATE THE STEEL DIAPHRAGM ATTACHMENTS AS AS DETAILED ON THE STEEL DIAPHRAGM DETAIL SHEET.

IF SOLE PLATE IS REQUIRED FOR BEARING, SOLE PLATE IS TO BE SET IN FORMS WHEN BEAM IS CAST AND FORMED OUT BELOW TO EXCLUDE CONCRETE AS DETAILED ON THE BEARING SHEET.

IF STUB ABUTMENTS ARE USED, ALL STRANDS AT THE ENDS OF BEAMS AT STUB ABUTMENTS SHALL BE CUT OFF REASONABLY FLUSH WITH THE CONCRETE.

ALL DIMENSIONS ARE IN MILLIMETERS (mm) UNLESS OTHERWISE NOTED OR SHOWN.

12.7 mm DIAMETER STRANDS STRESSED TO NOT MORE THAN 14 kN EACH MAY BE USED IN LIEU OF THE a BARS WHICH RUN THE FULL LENGTH OF THE BEAM IN THE TOP FLANGE.

REINFORCING BAR LIST

A/B A=SIZE B=NO.

	MARK	SIZE	SHAPE	D11M 11 000 NO.	D11M 11 000 LENGTH	D12M 12 500 NO.	D12M 12 500 LENGTH	D14M 14 000 NO.	D14M 14 000 LENGTH	D15M 15 500 NO.	D15M 15 500 LENGTH	D17M 17 000 NO.	D17M 17 000 LENGTH	D18M 18 500 NO.	D18M 18 500 LENGTH	D20M 20 000 NO.	D20M 20 000 LENGTH	D21M 21 500 NO.	D21M 21 500 LENGTH	D23M 23 000 NO.	D23M 23 000 LENGTH	D24M 24 500 NO.	D24M 24 500 LENGTH	D26M 26 000 NO.	D26M 26 000 LENGTH	D27M 27 500 NO.	D27M 27 500 LENGTH	D29M 29 000 NO.	D29M 29 000 LENGTH	D30M 30 500 NO.	D30M 30 500 LENGTH	D32M 32 000 NO.	D32M 32 000 LENGTH	D33M 33 500 NO.	D33M 33 500 LENGTH
	a1	13	—	2	1200	2	1200	2	1200	2	1200	2	1200	2	1200	2	1200	2	1200	2	1200	2	1200	2	4900	2	5500	2	6000	2	6700	2	7300	2	8100
	a2	A/B	—	—	—	—	—	—	—	—	—	—	—	—	—	16/4	7190	16/4	7640	16/4	8090	16/4	8490	16/4	9090	16/4	9490	19/4	10 210	19/4	10 960	19/4	11 210	19/4	11 960
	a3	A/B	—	—	—	—	—	—	—	—	—	—	—	—	—	19/2	7600	19/2	8200	19/2	8800	19/2	9500	19/2	9800	25/2	10 500	25/2	11 000	25/2	11 000	25/2	12 000	25/2	12 000
ΔΔ	b1	13	⊂⊃	33	3130	37	3130	39	3130	43	3130	47	3130	51	3130	53	3130	57	3130	62	3130	66	3130	68	3130	74	3130	80	3130	81	3130	87	3130	91	3130
	b2	16	⊂⊃	6	2630	6	2630	6	2630	6	2630	8	2630	8	2630	8	2630	10	2630	10	2630	10	2630	10	2630	12	2630	12	2630	12	2630	12	2630	12	2630
	b3	16	⌒	4	1340	4	1340	4	1340	4	1340	8	1340	8	1340	8	1340	12	1340	12	1340	12	1340	12	1340	20	1340	20	1340	20	1340	20	1340	20	1340
	c1	10	⊓	33	620	37	620	39	620	43	620	47	620	51	620	53	620	57	620	62	620	66	620	68	620	74	620	80	620	81	620	87	620	91	620
	d1	10	△	33	1690	37	1690	39	1690	43	1690	47	1690	51	1690	53	1690	57	1690	62	1690	66	1690	68	1690	74	1690	80	1690	81	1690	87	1690	91	1690
	e1	10	⊓	12	680	12	680	12	680	12	680	12	680	12	680	12	680	14	680	14	680	14	680	14	680	14	680	16	680	16	680	16	680	16	680

DM BEAM DETAILS

IOWA DEPARTMENT OF TRANSPORTATION - HIGHWAY DIVISION
DESIGN SHEET NO. ____ OF ____ FILE NO. _____ DESIGN NO. _____

REVISED 05-04 - BARS b1 CHANGED TO EPOXY COATED. a1 CHANGED TO 16; a2 TO 16 AND 19; a3 TO 19 AND 25; b1, b2 TO 13; b3 TO 16.
HM4630.S01 : THIS SHEET ISSUED 9-1-95.

DESIGN TEAM	DM BEAMS	STANDARD SHEET M4630	COUNTY	PROJECT NUMBER	SHEET NUMBER

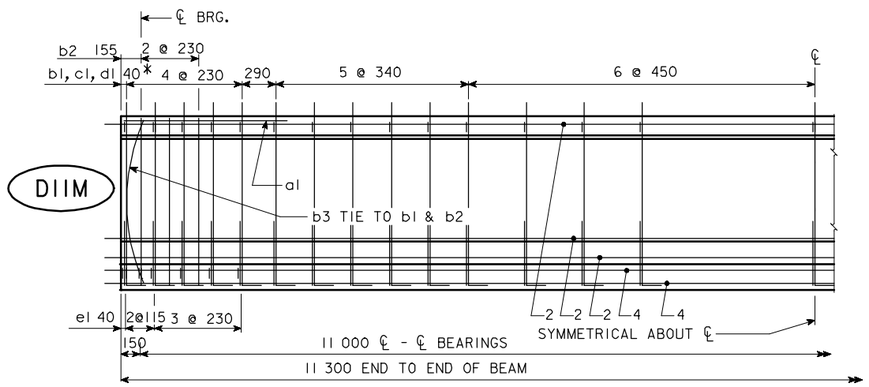

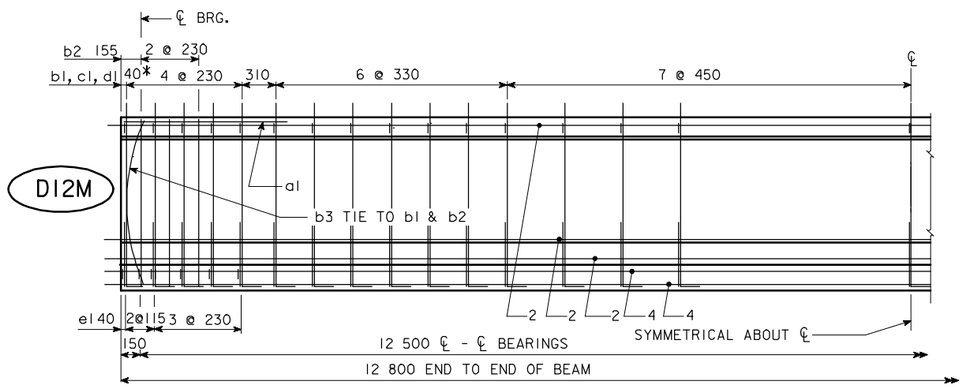

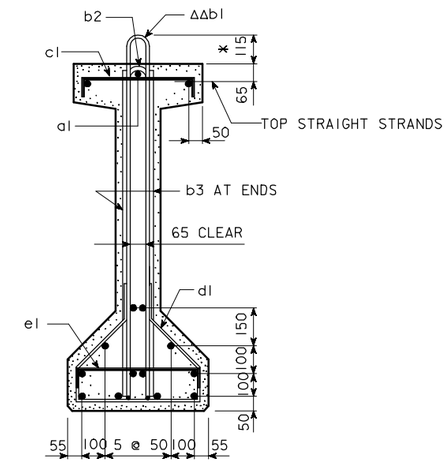

BEAMS D11M & D12M

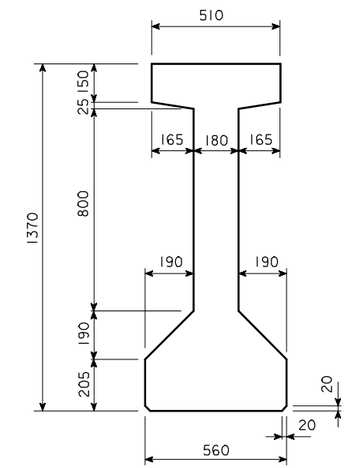

TYPICAL "DM" BEAM CROSS SECTION

AREA = 413 825 mm²
Y_b = 618 mm
I = 89 222 120 000 mm⁴

* KEEP
ΔΔ EPOXY COATED BARS

D11M & D12M BEAM DETAILS

IOWA DEPARTMENT OF TRANSPORTATION - HIGHWAY DIVISION
DESIGN SHEET NO. ____ OF ____ FILE NO. _____ DESIGN NO. _____

REVISED 05-04 - BARS b1 CHANGED TO EPOXY COATED.
HM631.SO1: THIS SHEET ISSUED 9-1-95.

DESIGN TEAM	DM BEAMS	STANDARD SHEET M631	COUNTY	PROJECT NUMBER	SHEET NUMBER

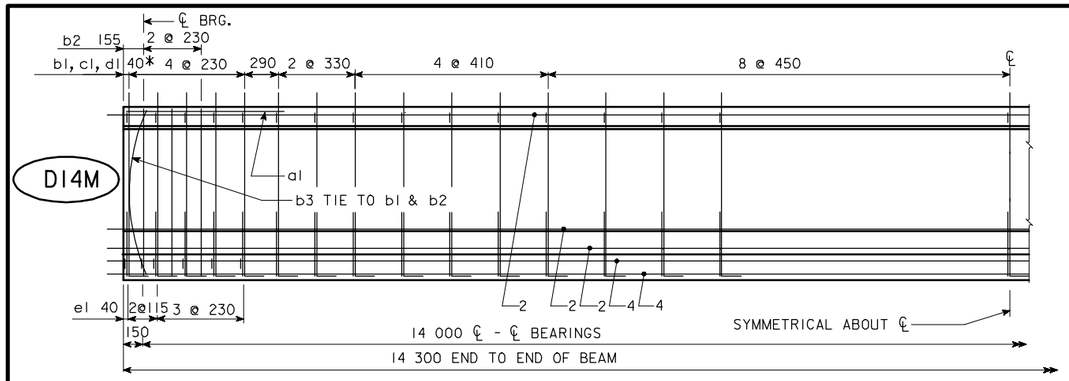

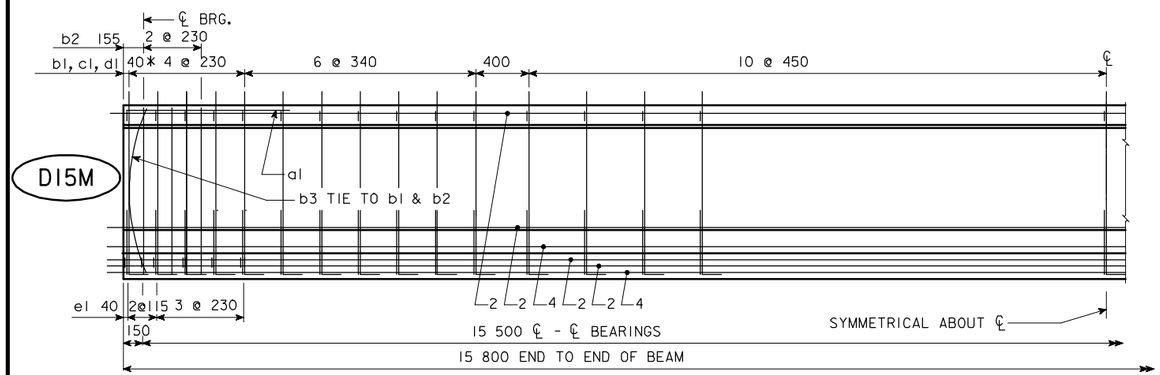

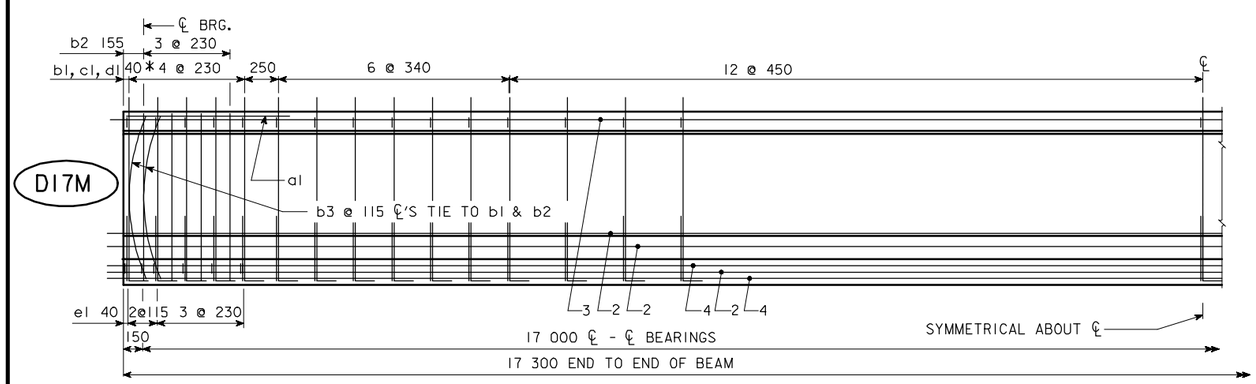

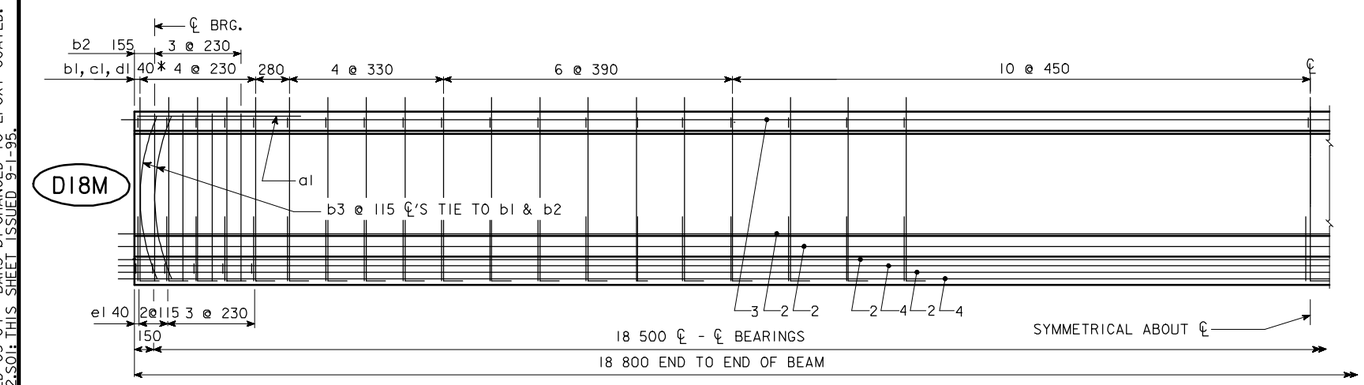

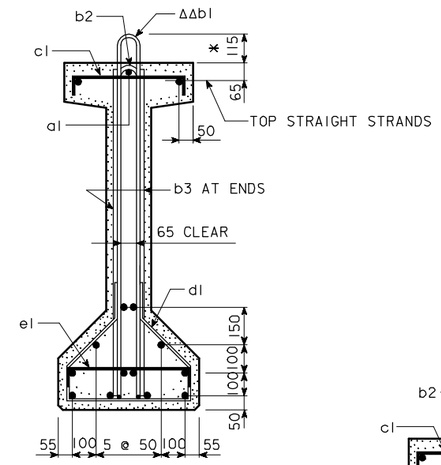

BEAM D14M

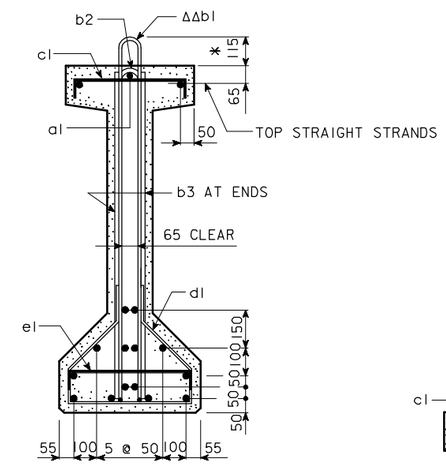

BEAM D15M

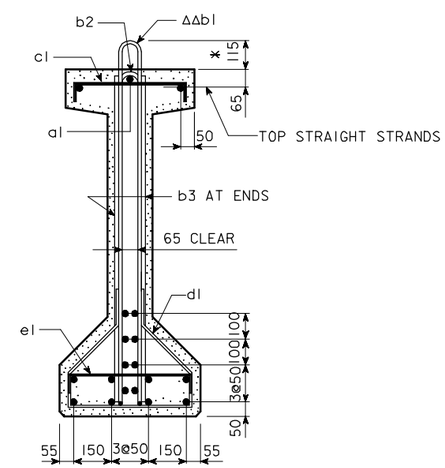

BEAM D18M

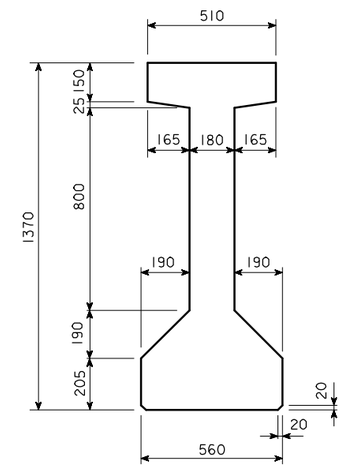

TYPICAL "DM" BEAM CROSS SECTION

AREA = 413 825 mm²
Y_b = 618 mm
I = 89 222 120 000 mm⁴

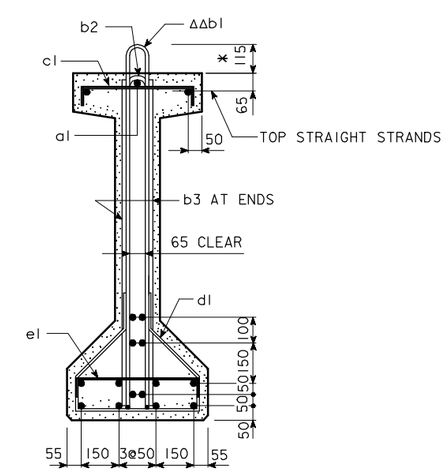

BEAM D17M

* KEEP
ΔΔ EPOXY COATED BARS

D14M - D18M BEAM DETAILS

IOWA DEPARTMENT OF TRANSPORTATION - HIGHWAY DIVISION
DESIGN SHEET NO. ____ OF ____ FILE NO. _____ DESIGN NO. _____

REVISED 05-04 - BARS b1 CHANGED TO EPOXY COATED.
HM4632.SOI: THIS SHEET ISSUED 9-1-95.

DESIGN TEAM	DM BEAMS	STANDARD SHEET M4632	COUNTY	PROJECT NUMBER	SHEET NUMBER

NOTE: DIMENSIONS FOR THE LOCATION OF THE DEFLECTED STRANDS ARE AT ℄ BEAM AND END OF BEAM.

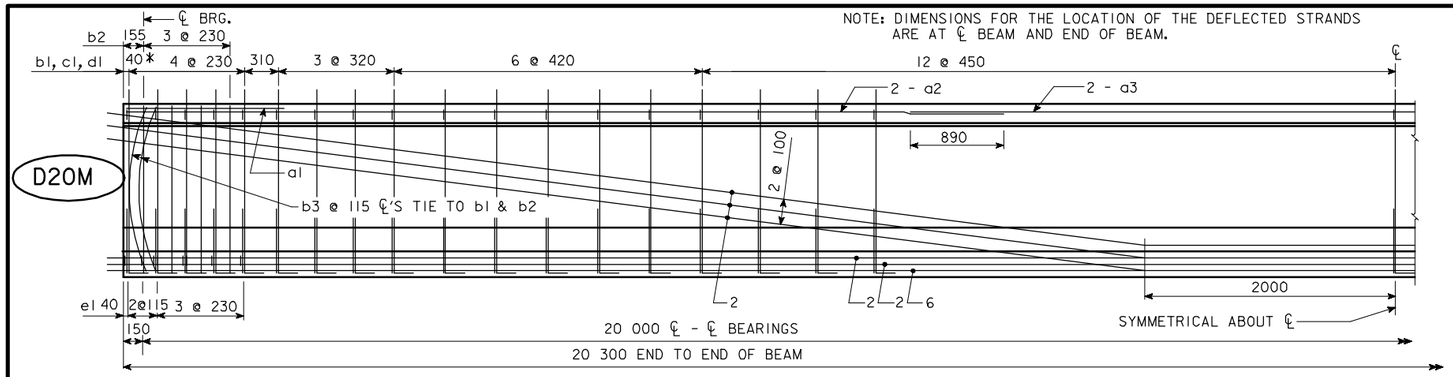

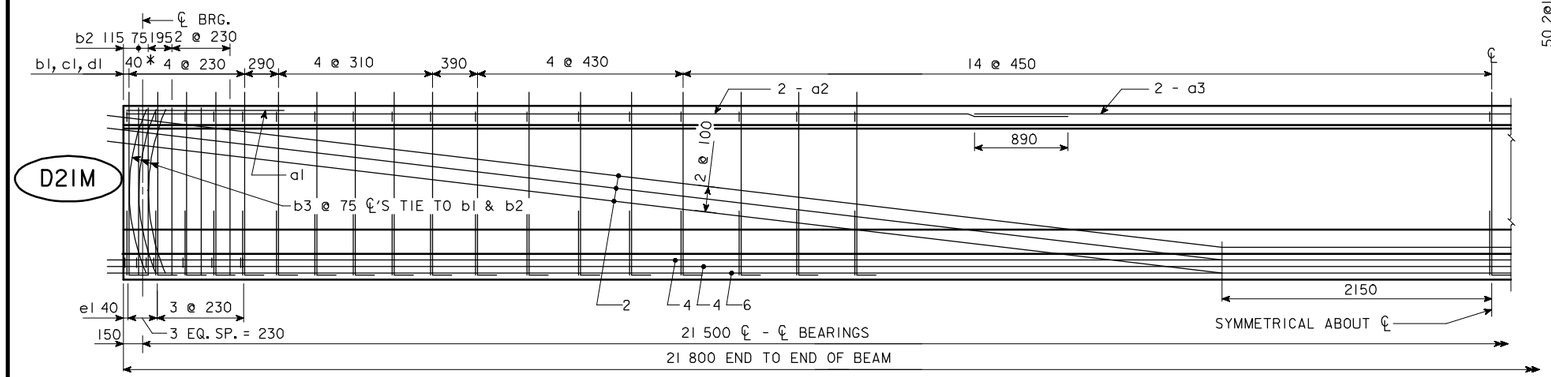

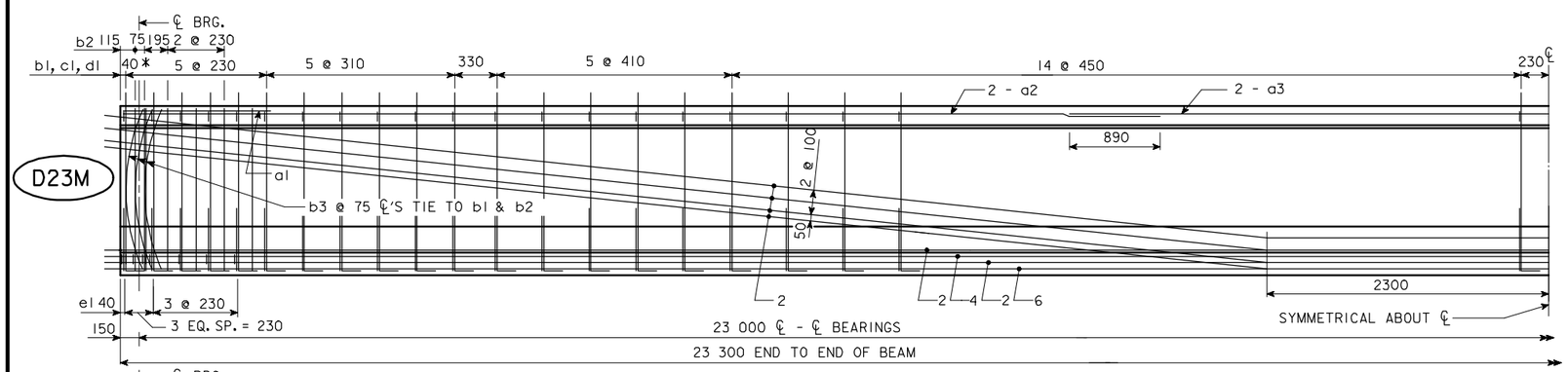

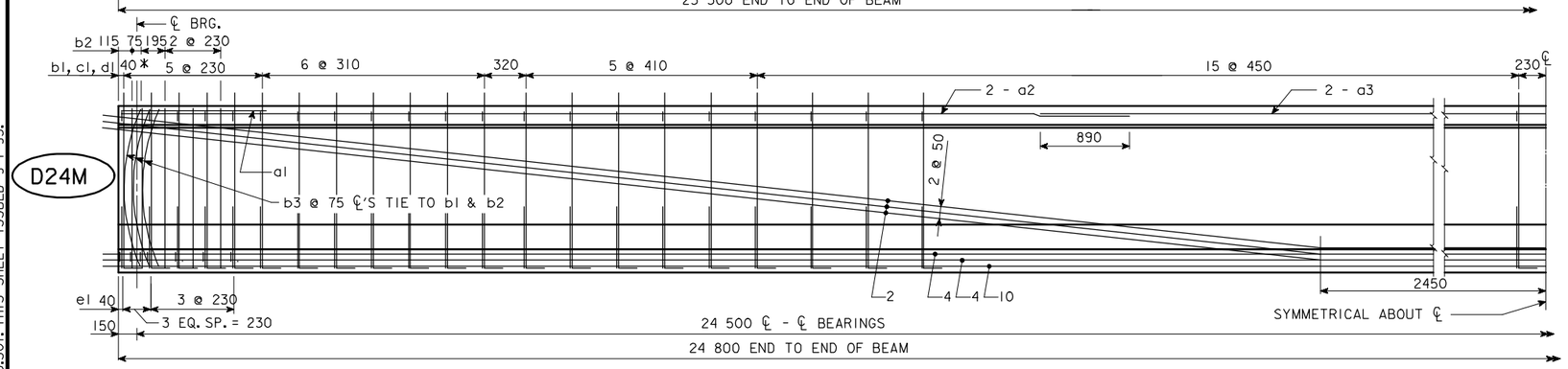

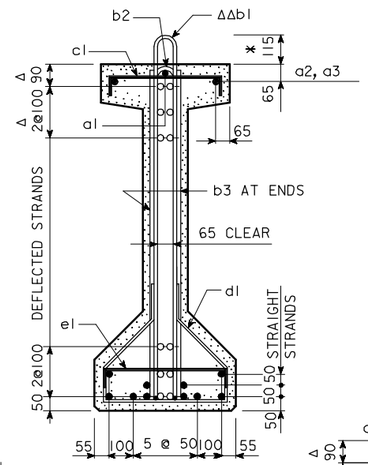

BEAM D20M

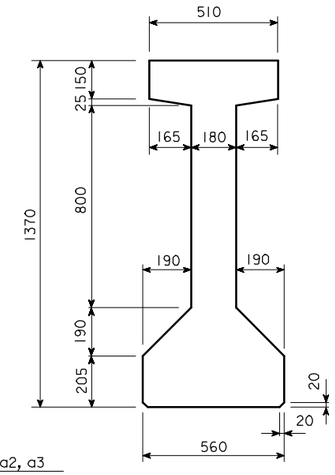

TYPICAL "DM" BEAM CROSS SECTION

AREA = 413 825 mm²
Y_b = 618 mm
I = 89 222 120 000 mm⁴

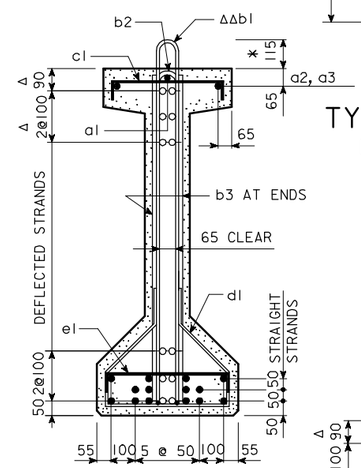

BEAM D21M

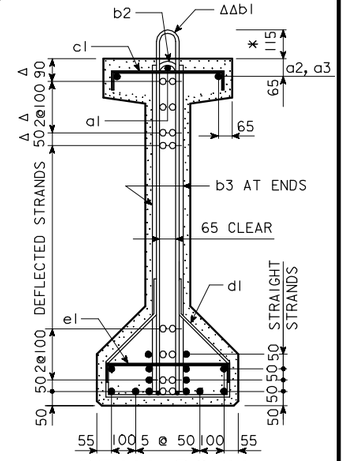

BEAM D23M

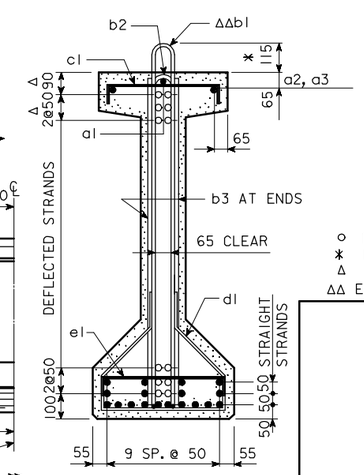

BEAM D24M

○ DEFLECTED STRANDS
* KEEP
Δ DIMENSIONS AT END OF BEAM
ΔΔ EPOXY COATED BARS

IOWA DEPARTMENT OF TRANSPORTATION - HIGHWAY DIVISION
DESIGN SHEET NO. ____ OF ____ FILE NO. _____ DESIGN NO. _____

REVISED 05-04 - BARS b1 CHANGED TO EPOXY COATED.
HM4633.S01: THIS SHEET ISSUED 9-1-95.

DESIGN TEAM	DM BEAMS	STANDARD SHEET M4633	COUNTY	PROJECT NUMBER	SHEET NUMBER

NOTE: DIMENSIONS FOR THE LOCATION OF THE DEFLECTED STRANDS ARE AT ℄ BEAM AND END OF BEAM.

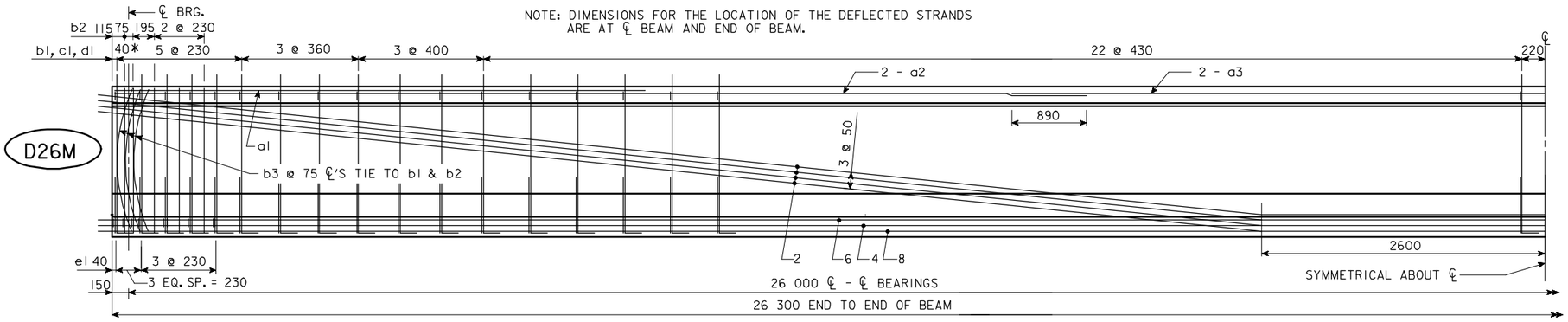

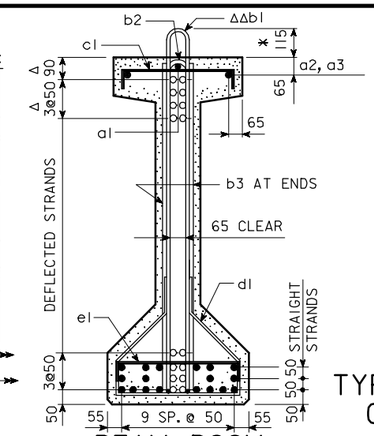

BEAM D26M

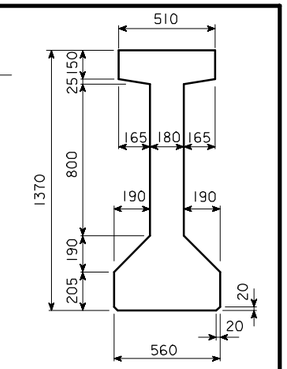

TYPICAL "DM" BEAM CROSS SECTION

AREA = 413 825 mm²
Y_b = 618 mm
I = 89 222 120 000 mm⁴

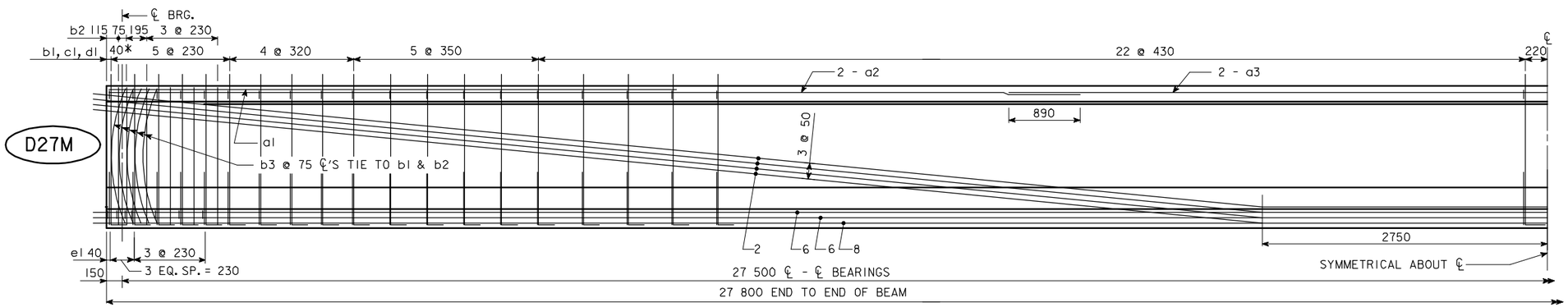

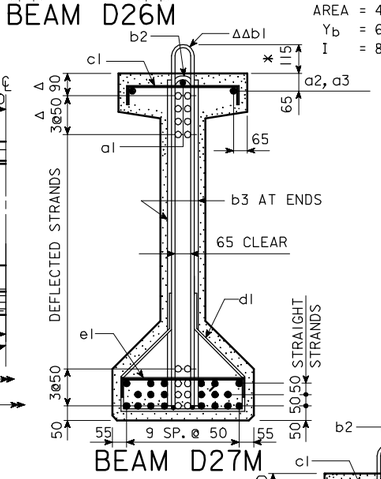

BEAM D27M

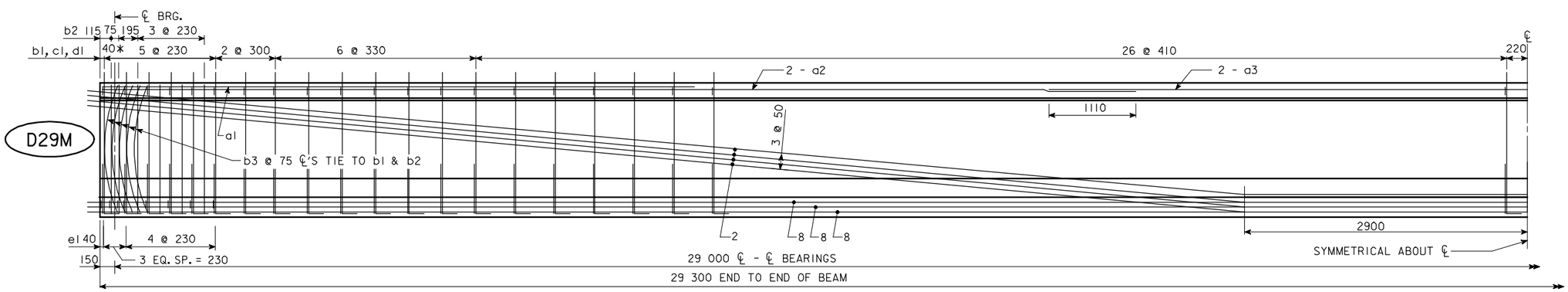

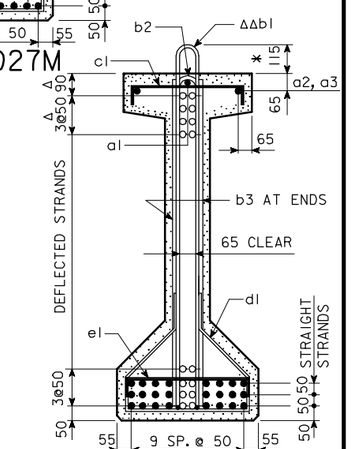

BEAM D29M

○ DEFLECTED STRANDS
✱ KEEP
Δ DIMENSIONS AT END OF BEAM
ΔΔ EPOXY COATED BARS

D26M - D29M BEAM DETAILS

IOWA DEPARTMENT OF TRANSPORTATION - HIGHWAY DIVISION

DESIGN SHEET NO. ____ OF ____ FILE NO. _____ DESIGN NO. _____

REVISED 05-04 - b1 BARS CHANGED TO EPOXY COATED.
HM4634.SOI : THIS SHEET ISSUED 9-1-95.

DESIGN TEAM	DM BEAMS	STANDARD SHEET M4634	COUNTY	PROJECT NUMBER	SHEET NUMBER

NOTE: DIMENSIONS FOR THE LOCATION OF THE DEFLECTED STRANDS ARE AT ℄ BEAM AND END OF BEAM.

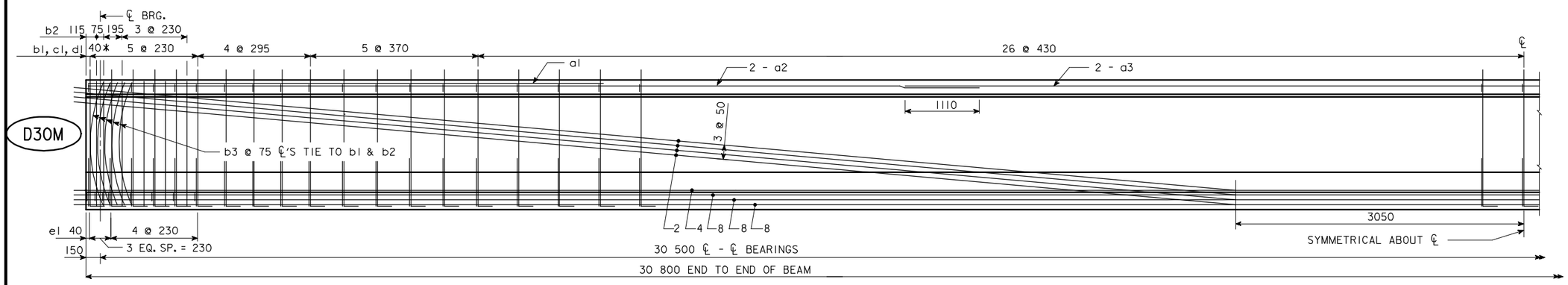

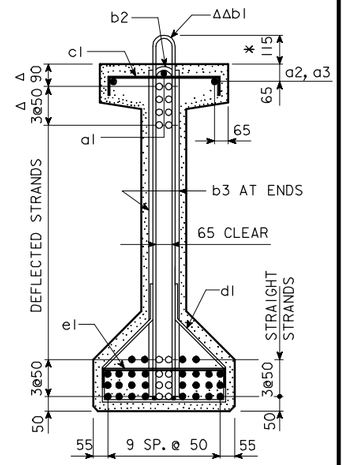

BEAM D30M

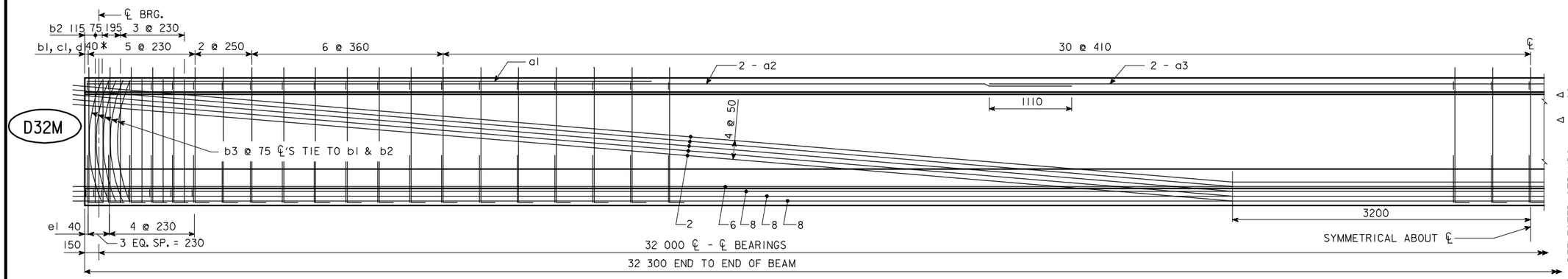

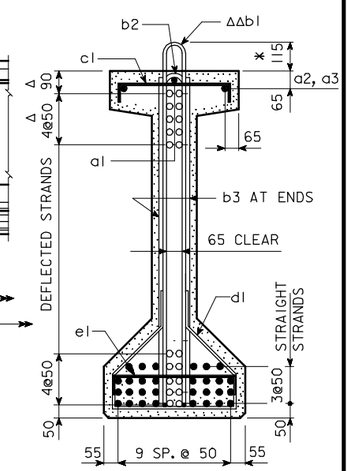

BEAM D32M

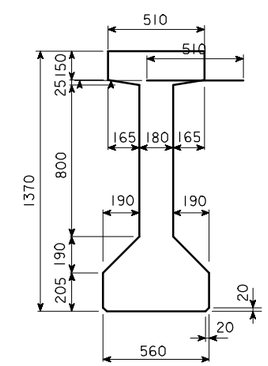

TYPICAL "DM" BEAM CROSS SECTION

AREA = 413 825 mm²
Y_b = 618 mm
I = 89 222 120 000 mm⁴

o DEFLECTED STRANDS
* KEEP
Δ DIMENSIONS AT END OF BEAM
ΔΔ EPOXY COATED BARS

D30M & D32M BEAM DETAILS

IOWA DEPARTMENT OF TRANSPORTATION - HIGHWAY DIVISION

DESIGN SHEET NO. ____ OF ____ FILE NO. _____ DESIGN NO. _____

REVISED 05-04 - BARS b1 CHANGED TO EPOXY COATED.
HM4635.SOI : THIS SHEET ISSUED 9-1-95.

DESIGN TEAM	DM BEAMS	STANDARD SHEET M4635	COUNTY	PROJECT NUMBER	SHEET NUMBER

10-FEB-2006 13:59 ajeffer W:\Projects\0000006002\BRFinal\MetricBeams.dgn m4635

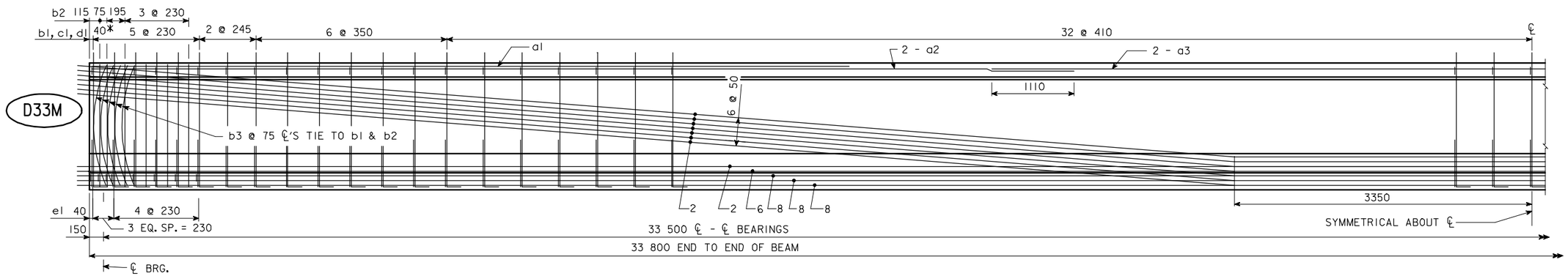

NOTE: DIMENSIONS FOR THE LOCATION OF THE DEFLECTED STRANDS ARE AT ℄ BEAM AND END OF BEAM.

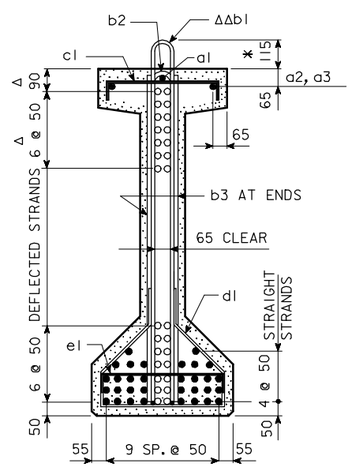

BEAM D33M

○ DEFLECTED STRANDS
* KEEP
Δ DIMENSIONS AT END OF BEAM
ΔΔ EPOXY COATED BARS

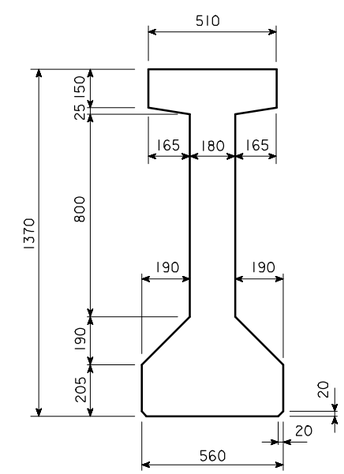

TYPICAL "DM" BEAM CROSS SECTION

AREA = 413 825 mm^2
Y_b = 618 mm
I = 89 222 120 000 mm^4

D33M BEAM DETAILS

IOWA DEPARTMENT OF TRANSPORTATION - HIGHWAY DIVISION

DESIGN SHEET NO. ____ OF ____ FILE NO. _____ DESIGN NO. _____

REVISED 05-04 - BARS b1 CHANGED TO EPOXY COATED.
HM4636.SOI : THIS SHEET ISSUED 9-1-95.

DESIGN TEAM	DM BEAMS	STANDARD SHEET M4636	COUNTY	PROJECT NUMBER	SHEET NUMBER

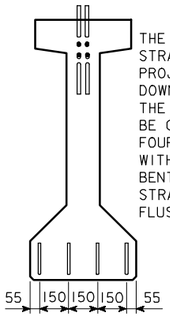

THE TOP AND BOTTOM ROWS OF DEFLECTED STRANDS ARE TO BE CUT WITH 350 mm PROJECTIONS AND SHOP BENT UP OR DOWN AS SHOWN.
THE REMAINING TOP STRANDS ARE TO BE CUT WITH 175 mm PROJECTIONS.
FOUR BOTTOM STRANDS ARE TO BE CUT WITH 350 mm PROJECTIONS AND SHOP BENT AS SHOWN. THE REMAINING BOTTOM STRANDS SHALL BE CUT OFF REASONABLY FLUSH WITH THE CONCRETE.

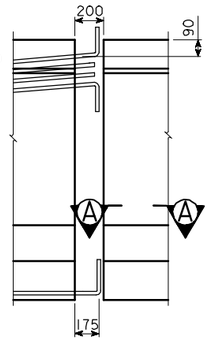

STRAND PROJECTION AT BEAM ENDS WHEN EMBEDDED IN CONCRETE END DIAPHRAGMS

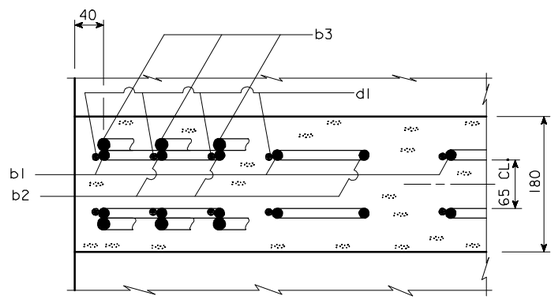

SECTION A-A SHOWING PLACEMENT OF STIRRUPS NEAR END OF BEAM

NOTES:

THESE BEAMS ARE DESIGNED FOR AASHTO LIVE LOADS AS INDICATED IN THE BEAM DATA TABLE WITH AN ALLOWANCE OF 960 Pa FOR FUTURE WEARING SURFACE.

HOLD DOWN POINTS FOR DEFLECTED STRANDS MAY BE MOVED TOWARD ENDS OF BEAM A DISTANCE OF 0.05 SPAN LENGTH MAXIMUM AT PRODUCER'S OPTION.

ALL PRESTRESSING STRANDS SHALL CONFORM TO ASTM A416 GRADE 270 LOW RELAXATION STRANDS.

TOPS OF BEAMS ARE TO BE STRUCK OFF LEVEL AND INTENTIONALLY ROUGHENED TRANSVERSELY TO A FULL AMPLITUDE OF APPROXIMATELY 6 mm EXCEPT A 50 mm WIDE FINISH SHALL BE PROVIDED ON THE TOP EDGE ON ONE SIDE ONLY OF THE BEAM.

BEARINGS SHALL BE AS DETAILED ON OTHER DESIGN SHEETS.

BEAMS TO BE USED IN BRIDGES MADE CONTINUOUS BY THE POURED IN PLACE FLOOR, ARE TO BE AT LEAST 28 DAYS OLD BEFORE THE FLOOR IS PLACED UNLESS A SHORTER CURING TIME IS APPROVED BY THE ENGINEER.

THE PORTIONS OF THE PRESTRESS BEAMS THAT ARE TO BE EMBEDDED IN THE ABUTMENT AND PIER DIAPHRAGMS SHALL BE ROUGHENED FOR A DISTANCE OF 250 mm FROM THE BEAM END BY SANDBLASTING OR OTHER APPROVED METHODS TO PROVIDE SUITABLE BOND BETWEEN THE BEAM AND THE DIAPHRAGM IN ACCORDANCE WITH ARTICLE 2403.14 OF THE METRIC SPECIFICATIONS.

UNLESS OTHERWISE NOTED ALL BEAMS ARE TO BE INCREASED IN LENGTH BY .0005L TO COMPENSATE FOR ELASTIC SHORTENING, CREEP AND SHRINKAGE.

FOR TRANSPORTING, THE OVERHANG SHALL BE IN ACCORDANCE WITH ARTICLE 2407.13 OF THE SPECIFICATIONS, EXCEPT THE OVERHANG MAY BE INCREASED TO A MAXIMUM OF 4250 mm.

THE CONTRACTOR SHALL ASSURE THE LATERAL STABILITY OF THE BEAMS DURING HANDLING, TRANSPORTING AND ERECTION BY PROVIDING TEMPORARY BRACING AS NEEDED.

IF THE PRECAST PANEL OPTION IS ALLOWED AND USED FOR BRIDGE DECK FORMATION, THE BEAM STIRRUPS WILL NEED TO BE EXTENDED AND TOP FLANGE BEAM FINISH SHALL BE MODIFIED AS PER DETAILS ON THE PRECAST DECK PANEL SHEET.

12.7 mm DIAMETER STRANDS STRESSED TO NOT MORE THAN 14 kN EACH MAY BE USED IN LIEU OF THE a BARS WHICH RUN THE FULL LENGTH OF THE BEAM IN THE TOP FLANGE.

IF THE STEEL DIAPHRAGM OPTION IS ALLOWED AND USED, HOLES MUST BE CAST IN THE WEB TO ACCOMMODATE THE STEEL DIAPHRAGM ATTACHMENTS AS AS DETAILED ON THE STEEL DIAPHRAGM DETAIL SHEET.

IF SOLE PLATE IS REQUIRED FOR BEARING, SOLE PLATE IS TO BE SET IN FORMS WHEN BEAM IS CAST AND FORMED OUT BELOW TO EXCLUDE CONCRETE AS DETAILED ON THE BEARING SHEET.

IF STUB ABUTMENTS ARE USED, ALL STRANDS AT THE ENDS OF BEAMS AT STUB ABUTMENTS SHALL BE CUT OFF REASONABLY FLUSH WITH THE CONCRETE.

WHEN EXPANSION JOINTS ARE USED, CONCRETE SEALER SHALL BE APPLIED TO THE PRESTRESSED BEAM END SECTION. THE SEALING SHALL BE IN ACCORDANCE WITH MATERIALS I.M. 570 AND 491.12.

ALL DIMENSIONS ARE IN MILLIMETERS (mm) UNLESS OTHERWISE NOTED OR SHOWN.

D35M BEAM DATA

BEAM	SPAN LENGTH ℄-℄ BEARING	OVERALL BEAM LENGTH (L)	STRAND SIZE (mm)	NO. OF STRANDS: STRAIGHT	NO. OF STRANDS: DEFLECTED	TOTAL INITIAL PRESTRESS ③ kN	HOLD DOWN FORCE-kN	CAMBER (mm): AT RELEASE	CAMBER (mm): AFTER LOSSES	DEFLECTION (mm) Δ_D: IMMEDIATE ① (ELASTIC) Δ_I: CONC. DIAPH.	IMMEDIATE ① (ELASTIC) Δ_I: STEEL DIAPH.	TIME ② (PLASTIC) Δ_T: CONC. DIAPH.	TIME ② (PLASTIC) Δ_T: STEEL DIAPH.	PERMISSIBLE SPACING:	PERMISSIBLE SPACING: MS18 LOADING: CONC. DIAPH.	PERMISSIBLE SPACING: MS18 LOADING: STEEL DIAPH.	MASS (kg)	CONCRETE (m^3)	REINFORCING STEEL (MASS - kg)
D35M	35 000	35 300	12.7	34	14	6615	144	63	109	63	60	16	15		2200	2200	35 100	14.6	741

① DEFLECTIONS AT MID-SPAN DUE TO WEIGHT OF SLAB AND DIAPHRAGM. THE DEFLECTIONS SHOWN ARE FOR A SLAB WEIGHT OF 10.7 kN/m. (200 mm SLAB AND 2200 mm BEAM SPACING) AND ONE CONCRETE DIAPHRAGM (13.6 kN) AND ONE STEEL DIAPHRAGM (1.22 kN) AT THE ℄ OF SPAN. FOR DIFFERENT SLAB AND DIAPHRAGM WEIGHTS, DEFLECTIONS WILL BE DIRECTLY PROPORTIONAL.

② DEFLECTIONS DUE TO THE COMBINED EFFECT OF CREEP DUE TO WEIGHT OF SLAB AND SHRINKAGE OF SLAB.

TOTAL BEAM DEFLECTIONS AT ℄ OF SPAN, Δ_D, DUE TO WEIGHT OF SLAB AND DIAPHRAGMS FOR DETAILING PURPOSE:

(A) $\Delta_D = \Delta_I + \Delta_T$ FOR SIMPLE SPAN.

(B) $\Delta_D = \Delta_I + \frac{3}{4}\Delta_T$ FOR END SPANS OF CONTINUOUS BRIDGE.

(C) $\Delta_D = \Delta_I + \frac{1}{2}\Delta_T$ FOR INTERIOR SPANS OF CONTINUOUS BRIDGE.

③ TOTAL INITIAL PRESTRESS FOR D35M IS BASED ON 75% $f's$ = 1860 MPa AND As = 98.71 mm^2

SPECIFICATIONS:

CONSTRUCTION: STANDARD SPECIFICATIONS OF THE IOWA DEPARTMENT OF TRANSPORTATION, CURRENT SERIES, WITH CURRENT APPLICABLE SPECIAL PROVISIONS AND SUPPLEMENTAL SPECIFICATIONS.

DESIGN: AASHTO, SERIES OF 1996 WITH MINOR MODIFICATIONS.

DESIGN STRESSES:

DESIGN STRESSES FOR THE FOLLOWING MATERIALS ARE TO BE IN ACCORDANCE WITH A.A.S.H.T.O. STANDARD SPECIFICATIONS FOR HIGHWAY BRIDGES, SERIES OF 1996:
INFORMATION HAS BEEN CONVERTED TO A METRIC VERSION.

REINFORCING STEEL IN ACCORDANCE WITH SECTION 8, GRADE 400.

CONCRETE IN ACCORDANCE WITH SECTION 9.
MINIMUM CONCRETE $f'c$ (AT 28 DAYS) SHALL BE 52 MPa
MINIMUM $f'ci$ AT RELEASE SHALL BE 41 MPa

PRESTRESSING STEEL IN ACCORDANCE WITH SECTION 9, GRADE 270.

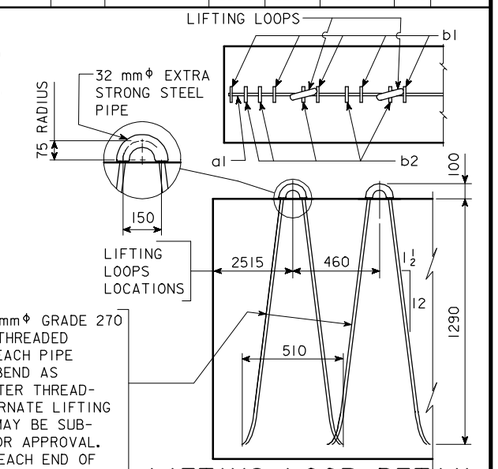

LIFTING LOOP DETAIL

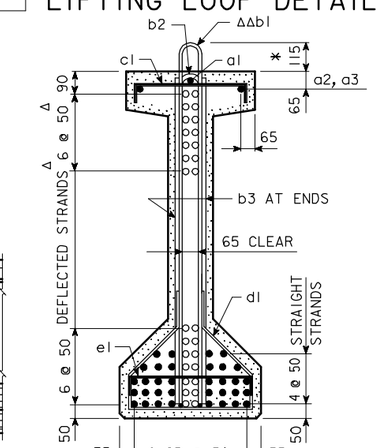

BEAM D35M

NOTE: DIMENSIONS FOR THE LOCATION OF THE DEFLECTED STRANDS ARE AT ℄ BEAM AND END OF BEAM.
○ DEFLECTED STRANDS
* KEEP
Δ DIMENSIONS AT END OF BEAM
ΔΔ EPOXY COATED BARS

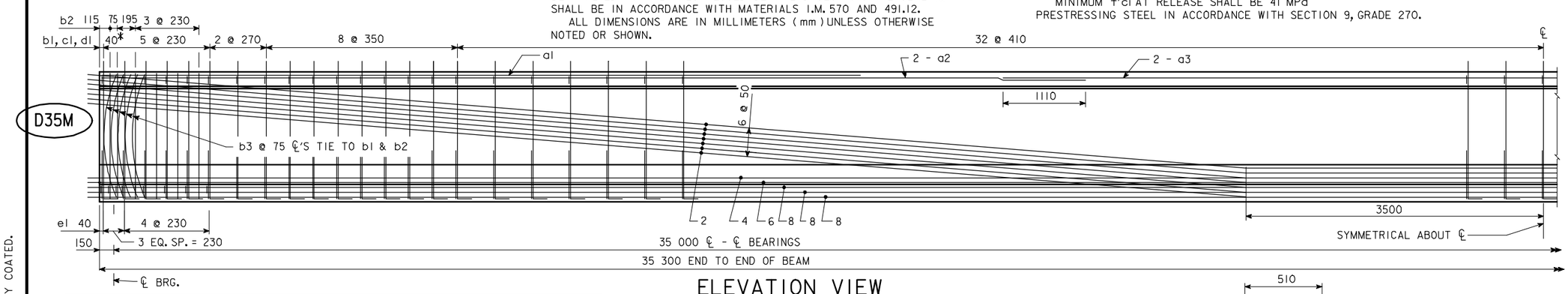

ELEVATION VIEW

REINFORCING BAR LIST FOR D35M BEAM				
MARK	SIZE	SHAPE	NO.	LENGTH
a1	13		2	8100
a2	19		4	12 720
a3	25		2	12 000
ΔΔ b1	13		95	3130
b2	16		12	2630
b3	16		20	1340
c1	10		95	620
d1	10		95	1690
e1	10		16	680

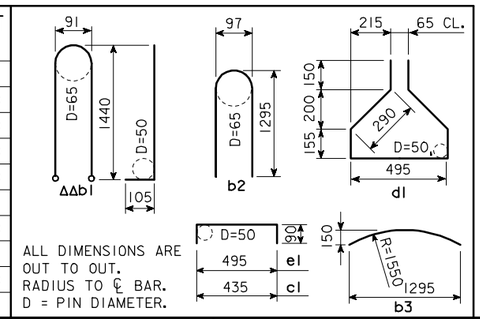

ALL DIMENSIONS ARE OUT TO OUT.
RADIUS TO ℄ BAR.
D = PIN DIAMETER.

ΔΔ b1 BARS TO BE EPOXY COATED.

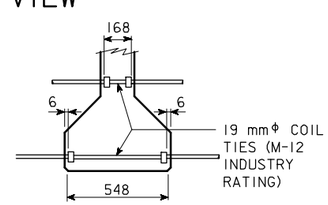

COIL TIE DETAIL

NUMBER AND EXACT LOCATION OF COIL TIES TO BE AS DETAILED ON SPECIFIC BRIDGE DESIGN.

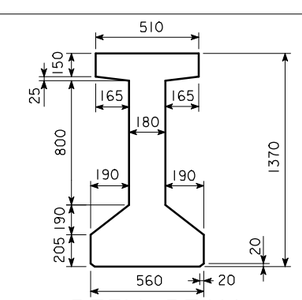

AREA = 413 825 mm^2
Y_b = 618 mm
I = 89 222 120 000 mm^4

D35M BEAM CROSS SECTION

D35M BEAM DETAILS

IOWA DEPARTMENT OF TRANSPORTATION - HIGHWAY DIVISION

DESIGN SHEET NO. ____ OF ____ FILE NO. _____ DESIGN NO. _____

DESIGN TEAM	DM BEAM	STANDARD SHEET M4637	COUNTY	PROJECT NUMBER	SHEET NUMBER

REVISED 05-04 - BARS b1 CHANGED TO EPOXY COATED.
HM4637.S01 - 12-99 THIS SHEET ISSUED.

10-FEB-2006 14:00 ajeffer W:\Projects\0000006002\BRFinal\MetricBeams.dgn m4637

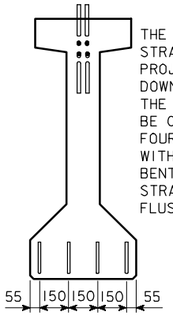

THE TOP AND BOTTOM ROWS OF DEFLECTED STRANDS ARE TO BE CUT WITH 350 mm PROJECTIONS AND SHOP BENT UP OR DOWN AS SHOWN.
THE REMAINING TOP STRANDS ARE TO BE CUT WITH 175 mm PROJECTIONS.
FOUR BOTTOM STRANDS ARE TO BE CUT WITH 350 mm PROJECTIONS AND SHOP BENT AS SHOWN. THE REMAINING BOTTOM STRANDS SHALL BE CUT OFF REASONABLY FLUSH WITH THE CONCRETE.

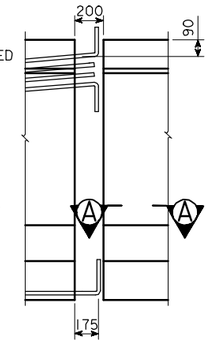

STRAND PROJECTION AT BEAM ENDS WHEN EMBEDDED IN CONCRETE END DIAPHRAGMS

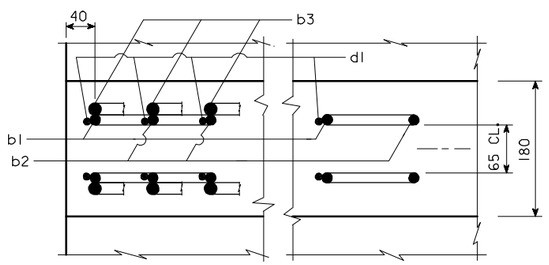

PART SECTION A-A SHOWING PLACEMENT OF STIRRUPS NEAR END OF BEAM

NOTES:

THESE BEAMS ARE DESIGNED FOR AASHTO LIVE LOADS AS INDICATED IN THE BEAM DATA TABLE WITH AN ALLOWANCE OF 960 Pa FOR FUTURE WEARING SURFACE.

HOLD DOWN POINTS FOR DEFLECTED STRANDS MAY BE MOVED TOWARD ENDS OF BEAM A DISTANCE OF 0.05 SPAN LENGTH MAXIMUM AT PRODUCER'S OPTION.

ALL PRESTRESSING STRANDS SHALL CONFORM TO ASTM A416 GRADE 270 LOW RELAXATION STRANDS.

TOPS OF BEAMS ARE TO BE STRUCK OFF LEVEL AND INTENTIONALLY ROUGHENED TRANSVERSELY TO A FULL AMPLITUDE OF APPROXIMATELY 6 mm EXCEPT A 50 mm WIDE FINISH SHALL BE PROVIDED ON THE TOP EDGE ON ONE SIDE ONLY OF THE BEAM.

BEARINGS SHALL BE AS DETAILED ON OTHER DESIGN SHEETS.

BEAMS TO BE USED IN BRIDGES MADE CONTINUOUS BY THE POURED IN PLACE FLOOR, ARE TO BE AT LEAST 28 DAYS OLD BEFORE THE FLOOR IS PLACED UNLESS A SHORTER CURING TIME IS APPROVED BY THE ENGINEER.

THE PORTIONS OF THE PRESTRESS BEAMS THAT ARE TO BE EMBEDDED IN THE ABUTMENT AND PIER DIAPHRAGMS SHALL BE ROUGHENED FOR A DISTANCE OF 250 mm FROM THE BEAM END BY SANDBLASTING OR OTHER APPROVED METHODS TO PROVIDE SUITABLE BOND BETWEEN THE BEAM AND THE DIAPHRAGM IN ACCORDANCE WITH ARTICLE 2403.14 OF THE METRIC SPECIFICATIONS.

UNLESS OTHERWISE NOTED ALL BEAMS ARE TO BE INCREASED IN LENGTH BY .0005L TO COMPENSATE FOR ELASTIC SHORTENING, CREEP AND SHRINKAGE.

FOR TRANSPORTING, THE OVERHANG SHALL BE IN ACCORDANCE WITH ARTICLE 2407.13 OF THE SPECIFICATIONS, EXCEPT THE OVERHANG MAY BE INCREASED TO A MAXIMUM OF 4250 mm.

THE CONTRACTOR SHALL ASSURE THE LATERAL STABILITY OF THE BEAMS DURING HANDLING, TRANSPORTING AND ERECTION BY PROVIDING TEMPORARY BRACING AS NEEDED.

IF THE PRECAST PANEL OPTION IS ALLOWED AND USED FOR BRIDGE DECK FORMATION, THE BEAM STIRRUPS WILL NEED TO BE EXTENDED AND TOP FLANGE BEAM FINISH SHALL BE MODIFIED AS PER DETAILS ON THE PRECAST DECK PANEL SHEET.

12.7 mm DIAMETER STRANDS STRESSED TO NOT MORE THAN 14 kN EACH MAY BE USED IN LIEU OF THE a BARS WHICH RUN THE FULL LENGTH OF THE BEAM IN THE TOP FLANGE.

IF THE STEEL DIAPHRAGM OPTION IS ALLOWED AND USED, HOLES MUST BE CAST IN THE WEB TO ACCOMMODATE THE STEEL DIAPHRAGM ATTACHMENTS AS AS DETAILED ON THE STEEL DIAPHRAGM DETAIL SHEET.

BEAM DATA

BEAM	SPAN LENGTH ℄-℄ BEARING	OVERALL BEAM LENGTH (L)	STRAND SIZE (mm)	NO. OF STRANDS: STRAIGHT	NO. OF STRANDS: DEFLECTED	TOTAL INITIAL PRESTRESS ③ kN	HOLD DOWN FORCE-kN	CAMBER (mm) AT RELEASE	CAMBER (mm) AT RELEASE	CAMBER (mm) AFTER LOSSES	CAMBER (mm) AFTER LOSSES	DEFLECTION (mm) Δ_D IMMEDIATE ① (ELASTIC) Δ_I: CONC. DIAPH.	DEFLECTION IMMEDIATE ①: STEEL DIAPH.	DEFLECTION TIME ② (PLASTIC) Δ_T: CONC. DIAPH.	DEFLECTION TIME ②: STEEL DIAPH.	PERMISSIBLE SPACING	PERMISSIBLE SPACING	PERMISSIBLE SPACING MS18 LOADING: CONC. DIAPH.	PERMISSIBLE SPACING MS18 LOADING: STEEL DIAPH.	MASS (kg)	CONCRETE (m^3)	REINFORCING STEEL (MASS-kg)
D36M	36 500	36 800	12.7Φ	34	14	6615	138	62		108		65	65	16	16			1900	2000	36 600	15.3	766

① DEFLECTIONS AT MID-SPAN DUE TO WEIGHT OF SLAB AND DIAPHRAGM. THE DEFLECTIONS SHOWN ARE FOR A SLAB WEIGHT OF 9.3 kN/m. (200 mm SLAB AND 1900 mm BEAM SPACING) AND ONE CONCRETE DIAPHRAGM (11.5 kN) OR A SLAB WEIGHT OF 9.8 kN/m (200 mm SLAB AND 2000 mm BEAM SPACING) AND ONE STEEL DIAPHRAGM (1.21 kN) AT THE ℄ OF SPAN. FOR DIFFERENT SLAB AND DIAPHRAGM WEIGHTS, DEFLECTIONS WILL BE DIRECTLY PROPORTIONAL.

② DEFLECTIONS DUE TO THE COMBINED EFFECT OF CREEP DUE TO WEIGHT OF SLAB AND SHRINKAGE OF SLAB.

TOTAL BEAM DEFLECTIONS AT ℄ OF SPAN, Δ_D, DUE TO WEIGHT OF SLAB AND DIAPHRAGMS FOR DETAILING PURPOSE:

(A) $\Delta_D = \Delta_I + \Delta_T$ FOR SIMPLE SPAN.
(B) $\Delta_D = \Delta_I + \frac{3}{4}\Delta_T$ FOR END SPANS OF CONTINUOUS BRIDGE.
(C) $\Delta_D = \Delta_I + \frac{1}{2}\Delta_T$ FOR INTERIOR SPANS OF CONTINUOUS BRIDGE.

③ TOTAL INITIAL PRESTRESS FOR D36M IS BASED ON 75% f's = 1860 MPa AND As = 98.71 mm^2

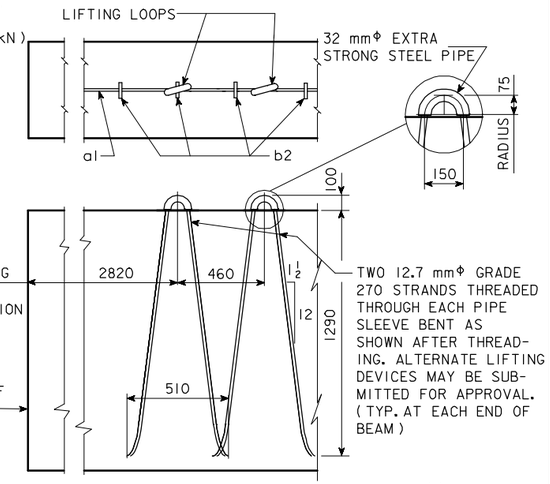

LIFTING LOOP DETAIL

NOTES: (CONTINUED)

WHEN EXPANSION JOINTS ARE USED, CONCRETE SEALER SHALL BE APPLIED TO THE PRESTRESSED BEAM END SECTION. THE SEALING SHALL BE IN ACCORDANCE WITH MATERIALS I.M. 570 AND 491.12.

IF SOLE PLATE IS REQUIRED FOR BEARING, SOLE PLATE IS TO BE SET IN FORMS WHEN BEAM IS CAST AND FORMED OUT BELOW TO EXCLUDE CONCRETE AS DETAILED ON THE BEARING SHEET.

IF STUB ABUTMENTS ARE USED, ALL STRANDS AT THE ENDS OF BEAMS AT STUB ABUTMENTS SHALL BE CUT OFF REASONABLY FLUSH WITH THE CONCRETE.

ALL DIMENSIONS ARE IN MILLIMETERS (mm) UNLESS OTHERWISE NOTED OR SHOWN.

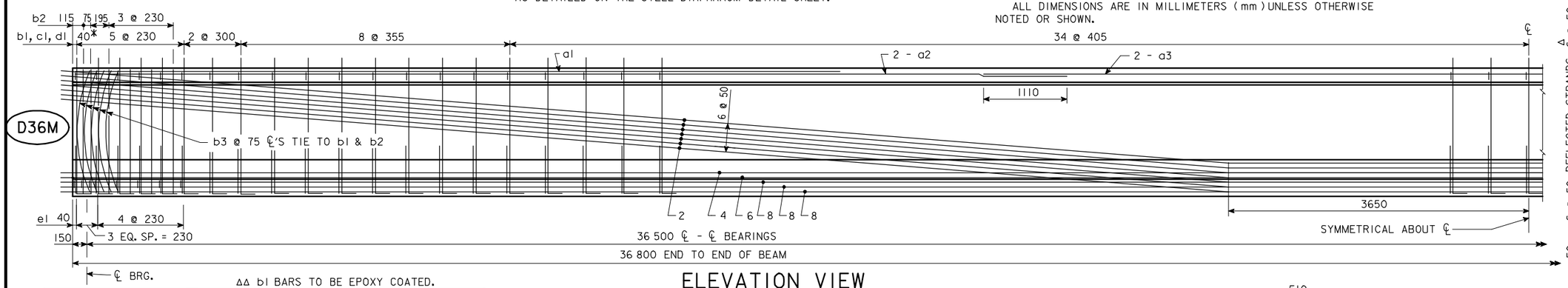

ELEVATION VIEW

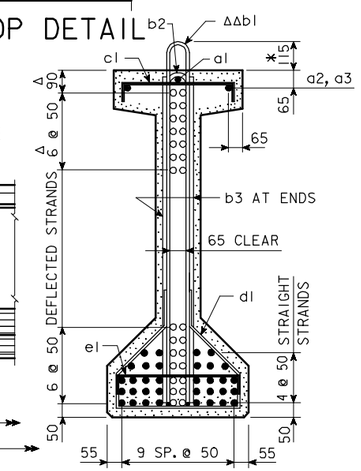

BEAM D36M

NOTE: DIMENSIONS FOR THE LOCATION OF THE DEFLECTED STRANDS ARE AT ℄ BEAM AND END OF BEAM.

- o DEFLECTED STRANDS
- * KEEP
- Δ DIMENSIONS AT END OF BEAM
- ΔΔ EPOXY COATED BARS

REINFORCING BAR LIST FOR D36M BEAM

	MARK	SIZE	SHAPE	NO.	LENGTH
	a1	13		2	8100
	a2	19		4	13 400
	a3	25		2	12 200
ΔΔ	b1	13		99	3130
	b2	16		12	2630
	b3	16		20	1340
	c1	10		99	620
	d1	10		99	1690
	e1	10		16	680

ΔΔ b1 BARS TO BE EPOXY COATED.

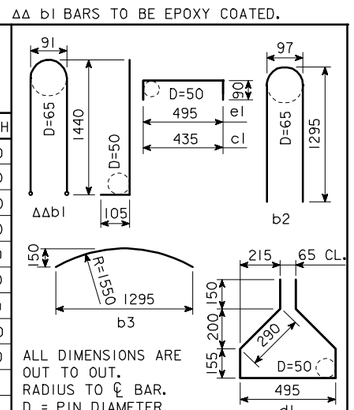

ALL DIMENSIONS ARE OUT TO OUT.
RADIUS TO ℄ BAR.
D = PIN DIAMETER.

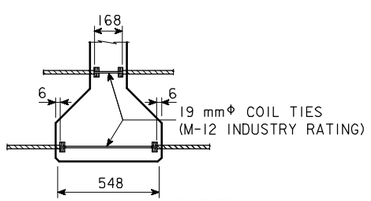

COIL TIE DETAIL

NUMBER AND EXACT LOCATION OF COIL TIES TO BE AS DETAILED ON SPECIFIC BRIDGE DESIGN.

SPECIFICATIONS:

CONSTRUCTION: STANDARD SPECIFICATIONS OF THE IOWA DEPARTMENT OF TRANSPORTATION, CURRENT SERIES, WITH CURRENT APPLICABLE SPECIAL PROVISIONS AND SUPPLEMENTAL SPECIFICATIONS.
DESIGN: A.A.S.H.T.O., SERIES OF 1996, WITH MINOR MODIFICATIONS.

DESIGN STRESSES:

DESIGN STRESSES FOR THE FOLLOWING MATERIALS ARE TO BE IN ACCORDANCE WITH A.A.S.H.T.O. STANDARD SPECIFICATIONS FOR HIGHWAY BRIDGES, SERIES OF 1996:
INFORMATION HAS BEEN CONVERTED TO A METRIC VERSION.
REINFORCING STEEL IN ACCORDANCE WITH SECTION 8, GRADE 400.
CONCRETE IN ACCORDANCE WITH SECTION 9.
MINIMUM CONCRETE f'c (AT 28 DAYS) SHALL BE 52 MPa
MINIMUM f'ci AT RELEASE SHALL BE 41 MPa
PRESTRESSING STEEL IN ACCORDANCE WITH SECTION 9, GRADE 270.

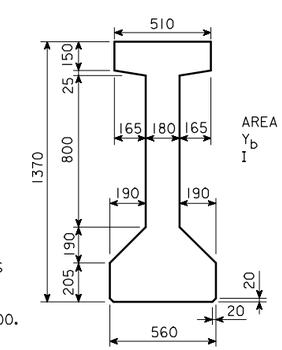

AREA = 413 825 mm^2
Y_b = 618 mm
I = 89 222 120 000 mm^4

D36M BEAM CROSS SECTION

D36M BEAM DETAILS

IOWA DEPARTMENT OF TRANSPORTATION - HIGHWAY DIVISION

DESIGN SHEET NO. ____ OF ____ FILE NO. _____ DESIGN NO. _____

DESIGN TEAM	DM BEAM	STANDARD SHEET M4638	COUNTY	PROJECT NUMBER	SHEET NUMBER

REVISED 05-04 - BARS b1 CHANGED TO EPOXY COATED.
HM4638.S01 - 12-99 THIS SHEET ISSUED.

10-FEB-2006 14:01 ajeffer W:\Projects\0000006002\BRFinal\MetricBeams.dgn m4638

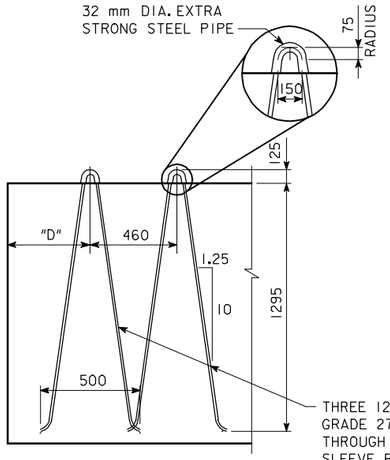

TYPICAL AT EACH END OF BEAM

LIFTING LOOP DETAIL

"D" = 1195 FOR BT36M
"D" = 1245 FOR BT38M
"D" = 1320 FOR BT39M
"D" = 1830 FOR BT41M
"D" = 2590 FOR BT42M

THREE 12.7 mm NOMINAL DIA. GRADE 270 STRANDS THREADED THROUGH EACH PIPE SLEEVE BENT AS SHOWN AFTER THREADING. ALTERNATE LIFTING DEVICES MAY BE SUBMITTED FOR APPROVAL.

LIFTING LOOPS SHALL BE PLACED ON CENTERLINE OF BEAM.

NUMBER AND EXACT LOCATION OF COIL TIES TO BE AS DETAILED ON SPECIFIC BRIDGE DESIGN.

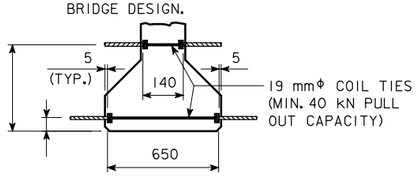

COIL TIE DETAIL

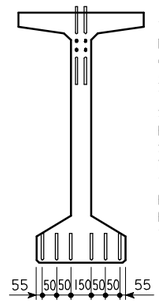

THE TOP AND BOTTOM ROWS OF THE DEFLECTED STRANDS ARE TO BE CUT WITH 460 mm PROJECTIONS WHICH ARE TO BE SHOP BENT AS SHOWN. THE REMAINING TOP DEFLECTED STRANDS ARE TO BE CUT WITH 175 mm PROJECTIONS.
SIX BOTTOM STRANDS ARE TO BE CUT WITH 460 mm PROJECTIONS WHICH ARE TO BE SHOP BENT AS SHOWN. THE REMAINING BOTTOM STRANDS ARE TO BE CUT OFF REASONABLY FLUSH WITH THE CONCRETE.

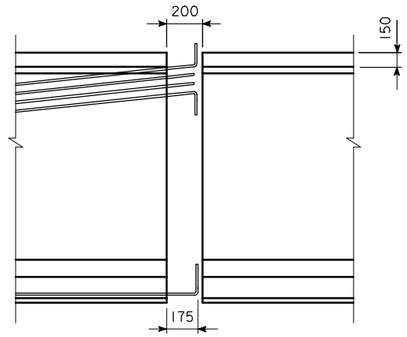

STRAND PROJECTION AT BEAM ENDS WHEN EMBEDDED IN CONCRETE END DIAPHRAGMS

BTM BEAM DATA

BEAM	SPAN LENGTH ℄-℄ BEARING	OVERALL BEAM LENGTH (L)	STRAND SIZE DIA. (mm)	NO. OF STRAND: STRAIGHT	NO. OF STRAND: DEFLECTED	TOTAL INITIAL PRESTRESS ③ kN	HOLD DOWN FORCE-kN	CAMBER (mm) AT RELEASE	CAMBER (mm) AT RELEASE	CAMBER (mm) AFTER LOSSES	CAMBER (mm) AFTER LOSSES	DEFLECTION (mm) Δ_D IMMEDIATE ① (ELASTIC) Δ_I: CONC. DIAPH.	IMMEDIATE ① (ELASTIC) Δ_I: STEEL DIAPH.	TIME ② (PLASTIC) Δ_T: CONC. DIAPH.	TIME ② (PLASTIC) Δ_T: STEEL DIAPH.	PERMISSIBLE MAX. SPCG.	PERMISSIBLE MAX. SPCG.	MS18 LOADING: CONC. DIAPH.	MS18 LOADING: STEEL DIAPH.	MASS (kg)	CONCRETE (m^3)	REINFORCING STEEL (MASS-kg)
BT36M	36 500	36 900	13.3	24	10	5110	149	35		60		36		9				2285		45 088	18.8	1245
BT38M	38 000	38 400	13.3	26	12	5711	165	41		71		42		10				2285		46 902	19.5	1287
BT39M	39 500	39 900	13.3	28	12	6012	160	46		79		49		12				2285		48 807	20.3	1329
BT41M	41 000	41 400	13.3	32	12	6613	154	55		96		56		14				2285		50 622	21.0	1384
BT42M	42 500	42 900	13.3	34	14	7214	166	62		108		64		16				2285		52 436	21.8	1426

① DEFLECTIONS AT MID-SPAN DUE TO WEIGHT OF SLAB AND DIAPHRAGM. THE DEFLECTIONS SHOWN ARE FOR A SLAB AND HAUNCH WEIGHT OF 11.3 kN/m (200 mm SLAB, 25 mm HAUNCH AND 2285 mm BEAM SPACING) AND THREE CONCRETE DIAPHRAGMS (19.3 kN EACH) AT ℄ OF SPAN AND AT EACH $\frac{1}{4}$ POINT. FOR DIFFERENT SLAB AND DIAPHRAGM WEIGHTS, DEFLECTIONS WILL BE DIRECTLY PROPORTIONAL.

② DEFLECTIONS DUE TO THE COMBINED EFFECT OF CREEP DUE TO WEIGHT OF SLAB AND SHRINKAGE OF SLAB.
TOTAL BEAM DEFLECTIONS AT ℄ OF SPAN, Δ_D, DUE TO WEIGHT OF SLAB AND DIAPHRAGMS FOR DETAILING PURPOSE:
(A) $\Delta_D = \Delta_I + \Delta_T$ FOR SIMPLE SPAN.
(B) $\Delta_D = \Delta_I + \frac{3}{4}\Delta_T$ FOR END SPANS OF CONTINUOUS BRIDGE.
(C) $\Delta_D = \Delta_I + \frac{1}{2}\Delta_T$ FOR INTERIOR SPANS OF CONTINUOUS BRIDGE.

③ TOTAL INITIAL PRESTRESS IS BASED ON 75% f's, f's. = 1860 MPa AND As = 107.74 mm^2.

NOTES:

THESE BEAMS ARE DESIGNED FOR AASHTO LIVE LOADS AS INDICATED IN ABOVE TABLE WITH AN ALLOWANCE OF 960 N PER SQUARE METER OF ROADWAY FOR FUTURE WEARING SURFACE.

HOLD DOWN POINTS FOR DEFLECTED STRANDS MAY BE MOVED TOWARD ENDS OF BEAM A DISTANCE OF 0.05 L MAXIMUM AT PRODUCER'S OPTION.

ALL PRESTRESSING STRANDS SHALL BE 13.3 mm NOMINAL DIAMETER (NOMINAL STEEL AREA = 107.74 mm^2) AND CONFORM TO ASTM A416 GRADE 270 LOW RELAXATION STRANDS. MINIMUM STRAND BREAKING STRENGTH SHALL BE 200.61 kN.

TOPS OF BEAMS ARE TO BE STRUCK OFF LEVEL AND INTENTIONALLY ROUGHENED TRANSVERSELY TO A FULL AMPLITUDE OF APPROXIMATELY 6 mm EXCEPT A 50 mm WIDE FINISH SHALL BE PROVIDED ON THE TOP EDGE ON ONE SIDE ONLY OF THE BEAM.

BEARINGS SHALL BE AS DETAILED ON OTHER DESIGN SHEETS.

BEAMS TO BE USED IN BRIDGES MADE CONTINUOUS BY THE POURED IN PLACE FLOOR, ARE TO BE AT LEAST 28 DAYS OLD BEFORE THE FLOOR IS PLACED UNLESS A SHORTER CURING TIME IS APPROVED BY THE BRIDGE ENGINEER.

THE PORTIONS OF THE PRESTRESSED BEAMS THAT ARE TO BE EMBEDDED IN THE ABUTMENT AND PIER DIAPHRAGMS SHALL BE ROUGHENED FOR A DISTANCE OF 250 mm FROM THE BEAM END BY SANDBLASTING OR OTHER APPROVED METHODS TO PROVIDE SUITABLE BOND BETWEEN THE BEAM AND THE DIAPHRAGM IN ACCORDANCE WITH ARTICLE 2403.14 OF THE SPECIFICATIONS.

IF THE PRECAST PANEL OPTION IS ALLOWED AND USED FOR BRIDGE DECK FORMATION, THE BEAM STIRRUPS WILL NEED TO BE EXTENDED AND TOP FLANGE BEAM FINISH SHALL BE MODIFIED AS PER DETAILS ON THE PRECAST DECK PANEL SHEET.

UNLESS OTHERWISE NOTED ALL BEAMS ARE TO BE INCREASED IN LENGTH BY .0005L TO COMPENSATE FOR ELASTIC SHORTENING, CREEP AND SHRINKAGE.

FOR TRANSPORTING, THE OVERHANG AT EITHER END SHALL NOT EXCEED 4875 mm.

THE CONTRACTOR SHALL ASSURE THE LATERAL STABILITY OF THE BEAMS DURING HANDLING, TRANSPORTING AND ERECTION BY PROVIDING TEMPORARY BRACING AS NEEDED.

ALL DIMENSIONS ARE IN MILLIMETERS (mm) UNLESS OTHERWISE NOTED OR SHOWN.

WHEN EXPANSION JOINTS ARE USED, CONCRETE SEALER SHALL BE APPLIED TO THE PRESTRESSED BEAM END SECTION. THE SEALING SHALL BE IN ACCORDANCE WITH MATERIALS I.M. 570 AND 491.12.

NOTES: (CONTINUED)

IF THE STEEL DIAPHRAGM OPTION IS ALLOWED AND USED, HOLES MUST BE CAST IN THE WEB TO ACCOMMODATE THE STEEL DIAPHRAGM ATTACHMENTS AS DETAILED ON THE STEEL DIAPHRAGM DETAIL SHEET.

IF SOLE PLATE IS REQUIRED FOR BEARING, SOLE PLATE IS TO BE SET IN FORMS WHEN BEAM IS CAST AND FORMED OUT BELOW TO EXCLUDE CONCRETE AS DETAILED ON THE BEARING SHEET.

IF STUB ABUTMENTS ARE USED, ALL STRANDS AT THE ENDS OF BEAMS AT STUB ABUTMENTS SHALL BE CUT OFF REASONABLY FLUSH WITH THE CONCRETE.

MINIMUM CONCRETE f'c (AT 28 DAYS) SHALL BE 52 MPa
MINIMUM f'ci AT RELEASE SHALL BE 41 MPa.

FOUR 13.3 mm DIAMETER STRANDS STRESSED TO NOT MORE THAN 18kN EACH MAY BE USED IN LIEU OF BARS a1 AND a2 IN THE TOP FLANGE.

SPECIFICATIONS:

CONSTRUCTION: STANDARD SPECIFICATIONS OF THE IOWA DEPARTMENT OF TRANSPORTATION, CURRENT SERIES, WITH CURRENT APPLICABLE SPECIAL PROVISIONS AND SUPPLEMENTAL SPECIFICATIONS.

DESIGN: A.A.S.H.T.O., SERIES OF 1992, WITH MINOR MODIFICATIONS.

DESIGN STRESSES:

DESIGN STRESSES FOR THE FOLLOWING MATERIALS ARE TO BE IN ACCORDANCE WITH A.A.S.H.T.O. STANDARD SPECIFICATIONS FOR HIGHWAY BRIDGES, SERIES OF 1992:
REINFORCING STEEL IN ACCORDANCE WITH SECTION 8, GRADE 400.
CONCRETE IN ACCORDANCE WITH SECTION 9, f'c = 52 MPa
PRESTRESSING STEEL IN ACCORDANCE WITH SECTION 9, GRADE 270.

ΔΔ b1, b2 BARS TO BE EPOXY COATED.
✱ b2 AND b3 BARS TO BE USED IN PAIRS.

REINFORCING BAR LIST

	BEAM			BT36M		BT38M		BT39M		BT41M		BT42M	
	BAR	SIZE	SHAPE	NO.	LENGTH	NO.	LENGTH	NO.	LENGTH	NO.	LENGTH	NO.	LENGTH
	a1	16	—	12	12 190	12	12 190	12	12 190	12	12 190	12	12 190
	a2	16	—	12	7215	12	7975	12	8710	12	9475	12	10 210
ΔΔ	b1	13		97	4015	101	4015	105	4015	111	4015	115	4015
ΔΔ ✱	b2	16		20	2160	20	2160	20	2160	20	2160	20	2160
✱	b3	16		20	1970	20	1970	20	1970	20	1970	20	1970
	c1	13	—	167	810	173	810	179	810	187	810	193	810
	d1	13		109	1770	113	1770	117	1770	123	1770	127	1770
	e	13		22	830	22	830	22	830	22	830	22	830
	h	13		10	2440	10	2440	10	2440	10	2440	10	2440

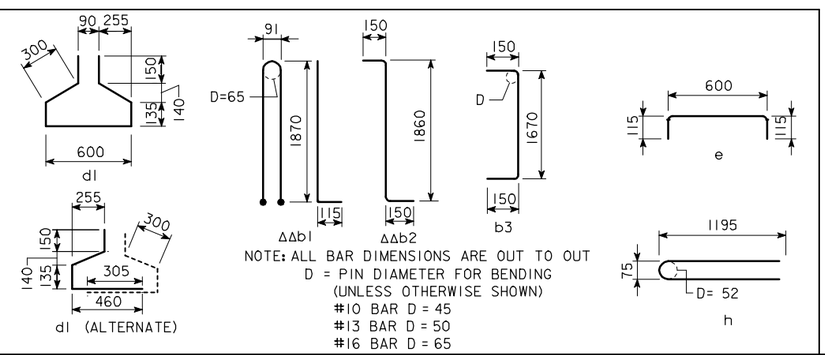

NOTE: ALL BAR DIMENSIONS ARE OUT TO OUT
D = PIN DIAMETER FOR BENDING
(UNLESS OTHERWISE SHOWN)
#10 BAR D = 45
#13 BAR D = 50
#16 BAR D = 65

BTM BEAM DETAILS

IOWA DEPARTMENT OF TRANSPORTATION - HIGHWAY DIVISION
DESIGN SHEET NO. ____ OF ____ FILE NO. _____ DESIGN NO. _____

DESIGN TEAM	BULB TEE BEAMS	STANDARD SHEET M4650	COUNTY	PROJECT NUMBER	SHEET NUMBER

REVISED 05-04 - BARS b1, b2 CHANGED TO EPOXY COATED. c1 BAR MODIFIED TO STRAIGHT BAR. a1, a2, b2, AND b3 BAR SIZE CHANGED FROM 15 TO 16. BARS b1, c, d, e & h CHANGED TO #13's.
HMBT4650.S01 - THIS SHEET ISSUED: 2-28-96

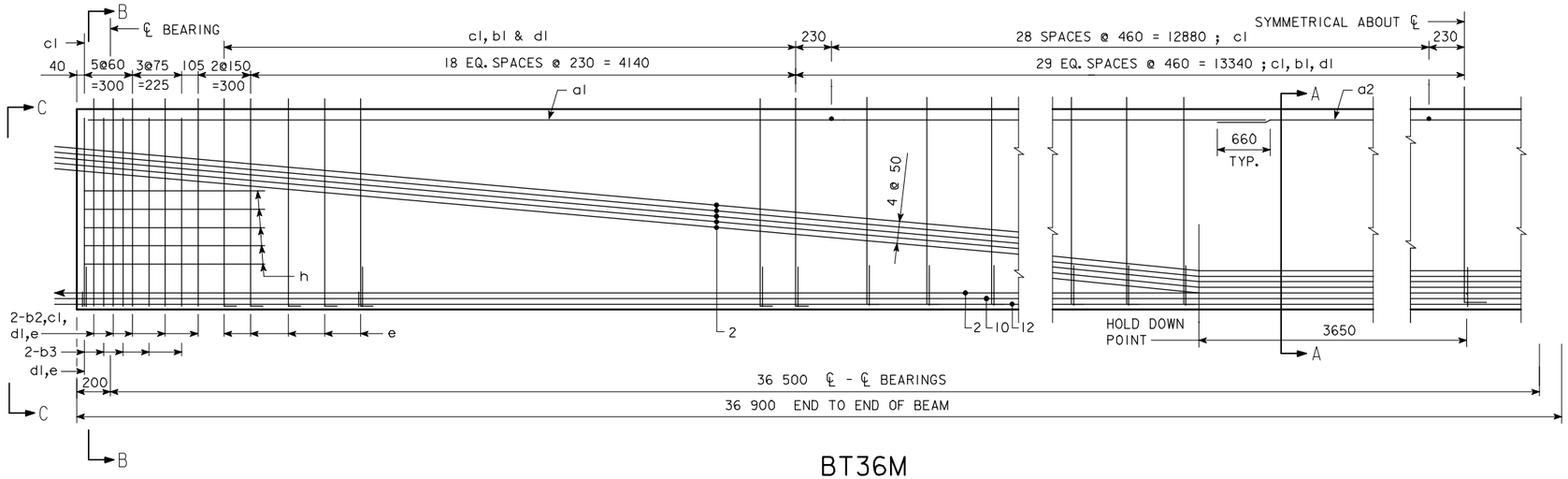

BT36M

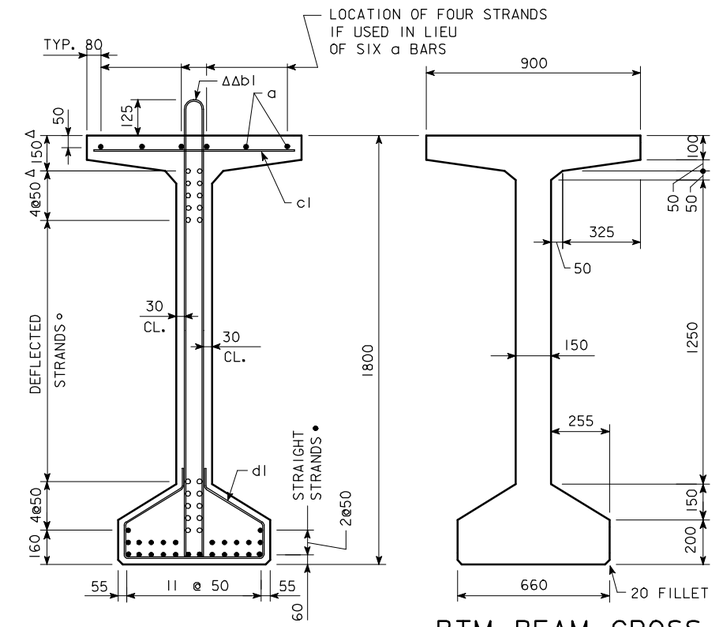

SECTION A-A

BTM BEAM CROSS SECTION

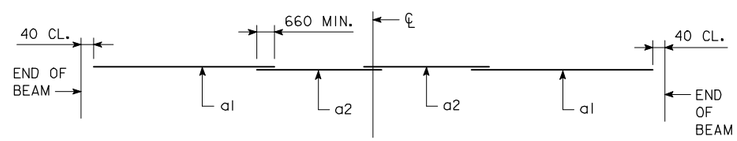

TOP FLANGE LONGIT. BAR LAYOUT

AREA = 508 600 mm²
$\bar{y}_b$ = 853 mm
I = 221 856 000 000 mm⁴

BEAM SECTION PROPERTIES

Δ DIMENSIONS AT END OF BEAM
ΔΔ EPOXY COATED BARS

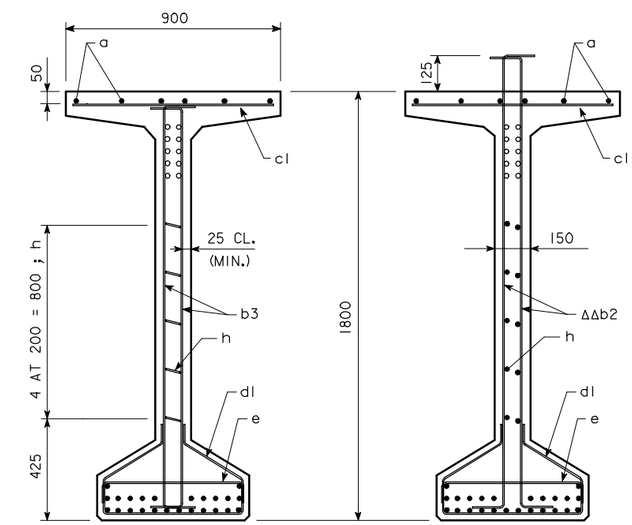

VIEW C-C

SECTION B-B

BT36M BEAM DETAILS

IOWA DEPARTMENT OF TRANSPORTATION - HIGHWAY DIVISION

DESIGN SHEET NO. ____ OF ____ FILE NO. _____ DESIGN NO. _____

REVISED 05-04 - BARS b1,b2 CHANGED TO EPOXY COATED. c1 MODIFIED TO STRAIGHT BAR.
HWBT4655.SOI - THIS SHEET ISSUED: 2-28-96

DESIGN TEAM	BULB TEE BEAM - 36 500 mm SPAN	STANDARD SHEET M4655	COUNTY	PROJECT NUMBER	SHEET NUMBER

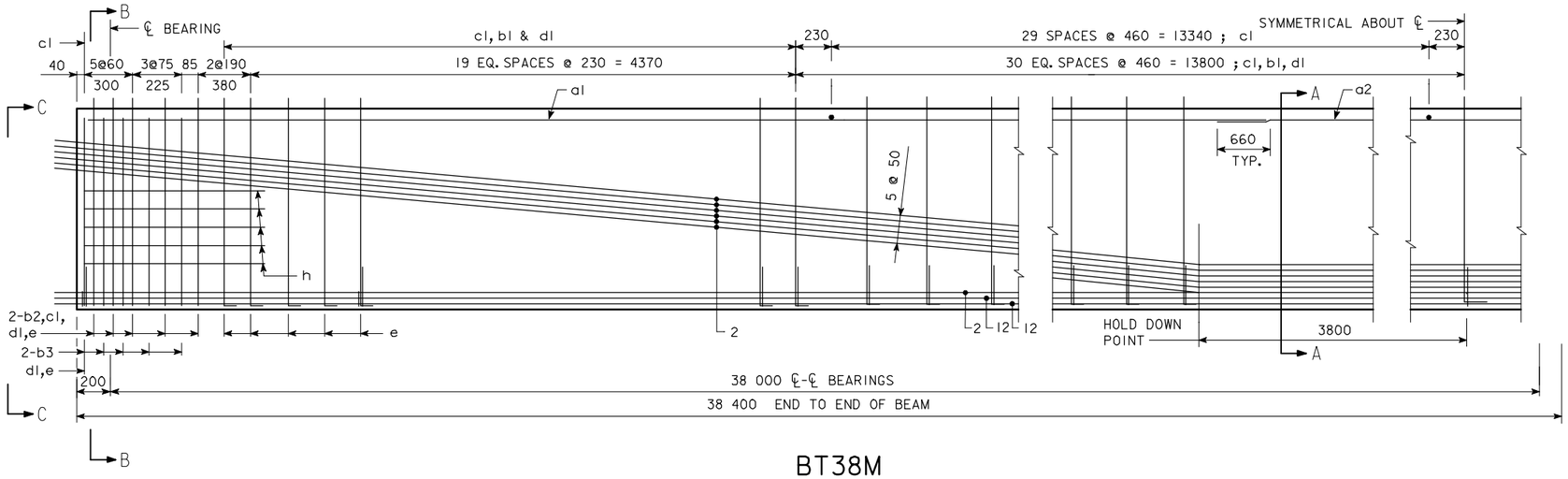

BT38M

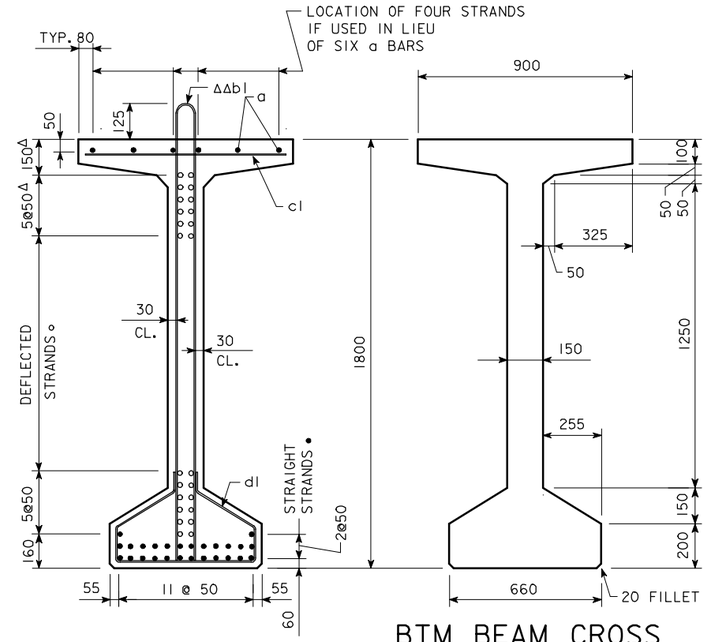

SECTION A-A

BTM BEAM CROSS SECTION

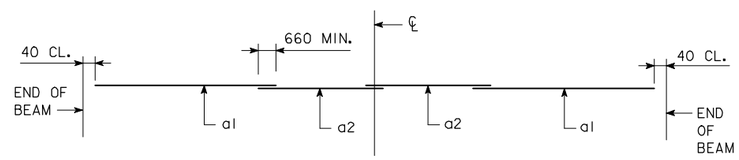

TOP FLANGE LONGIT. BAR LAYOUT

AREA = 508 600 mm²
$\bar{y}_b$ = 853 mm
I = 221 856 000 000 mm⁴

BEAM SECTION PROPERTIES

Δ DIMENSIONS AT END OF BEAM
ΔΔ EPOXY COATED BARS

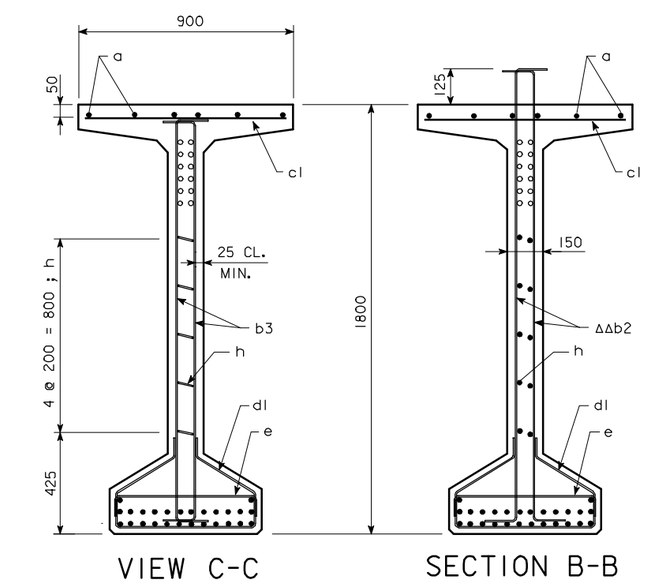

VIEW C-C

SECTION B-B

BT38M BEAM DETAILS

IOWA DEPARTMENT OF TRANSPORTATION - HIGHWAY DIVISION

DESIGN SHEET NO. ____ OF ____ FILE NO. _____ DESIGN NO. _____

DESIGN TEAM	BULB TEE BEAM - 38 000 mm SPAN	STANDARD SHEET M4656	COUNTY	PROJECT NUMBER	SHEET NUMBER

REVISED 05-04 - bl, b2 CHANGED TO EPOXY COATED. cl MODIFIED TO STRAIGHT BAR.
HMBT4656.S01 - THIS SHEET ISSUED: 2-28-96

10-FEB-2006 14:02 ajeffer W:\Projects\0000006002\BRFinal\MetricBeams.dgn mbt4656

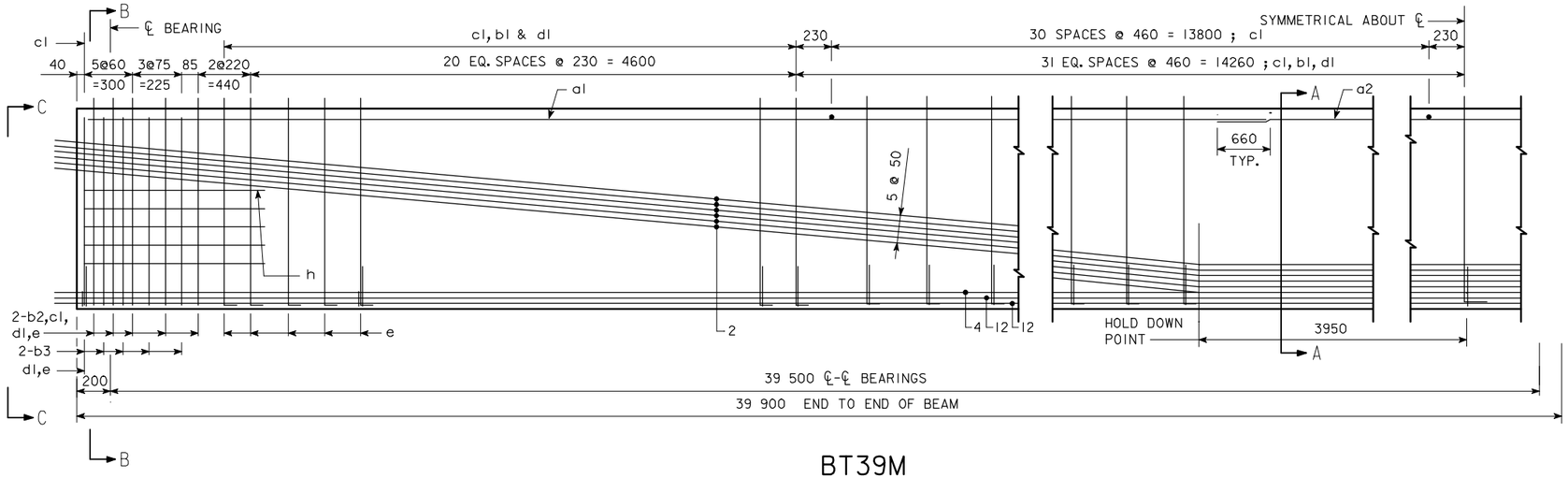

BT39M

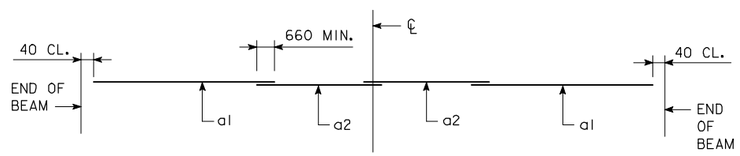

TOP FLANGE LONGIT. BAR LAYOUT

AREA = 508 600 mm²
$\bar{y}_b$ = 853 mm
I = 221 856 000 000 mm⁴

BEAM SECTION PROPERTIES

Δ DIMENSIONS AT END OF BEAM
ΔΔ EPOXY COATED BARS

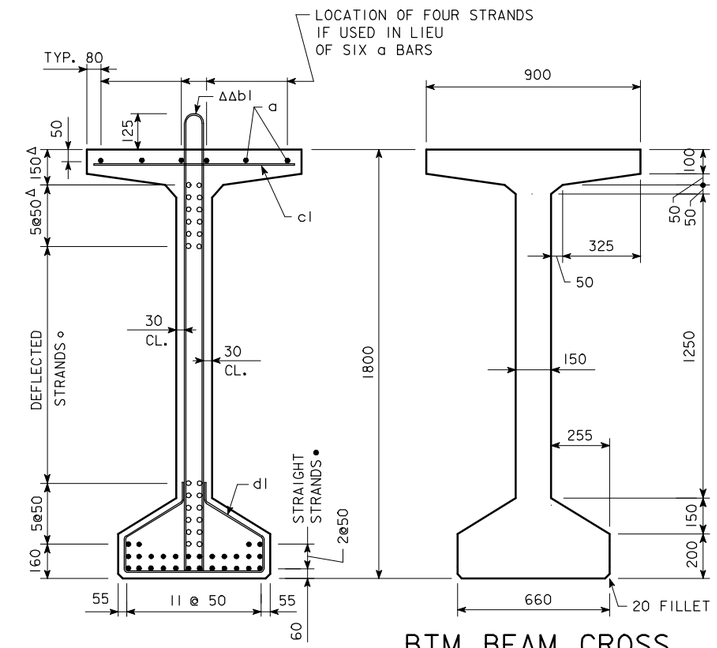

SECTION A-A

BTM BEAM CROSS SECTION

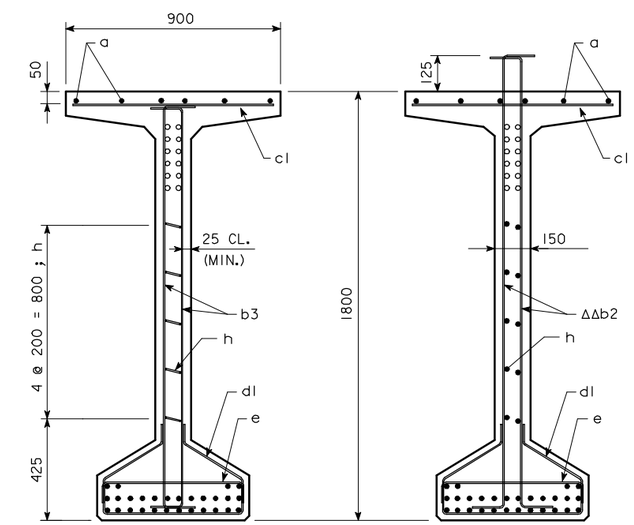

VIEW C-C

SECTION B-B

BT39M BEAM DETAILS

IOWA DEPARTMENT OF TRANSPORTATION - HIGHWAY DIVISION

DESIGN SHEET NO. ____ OF ____ FILE NO. _____ DESIGN NO. _____

DESIGN TEAM	BULB TEE BEAM - 39 500 mm SPAN	STANDARD SHEET M4657	COUNTY	PROJECT NUMBER	SHEET NUMBER

REVISED 05-04 - BARS b1,b2 CHANGED TO EPOXY COATED. c1 MODIFIED TO STRAIGHT BAR.
HMBT4657.S01 -THIS SHEET ISSUED:2-28-96

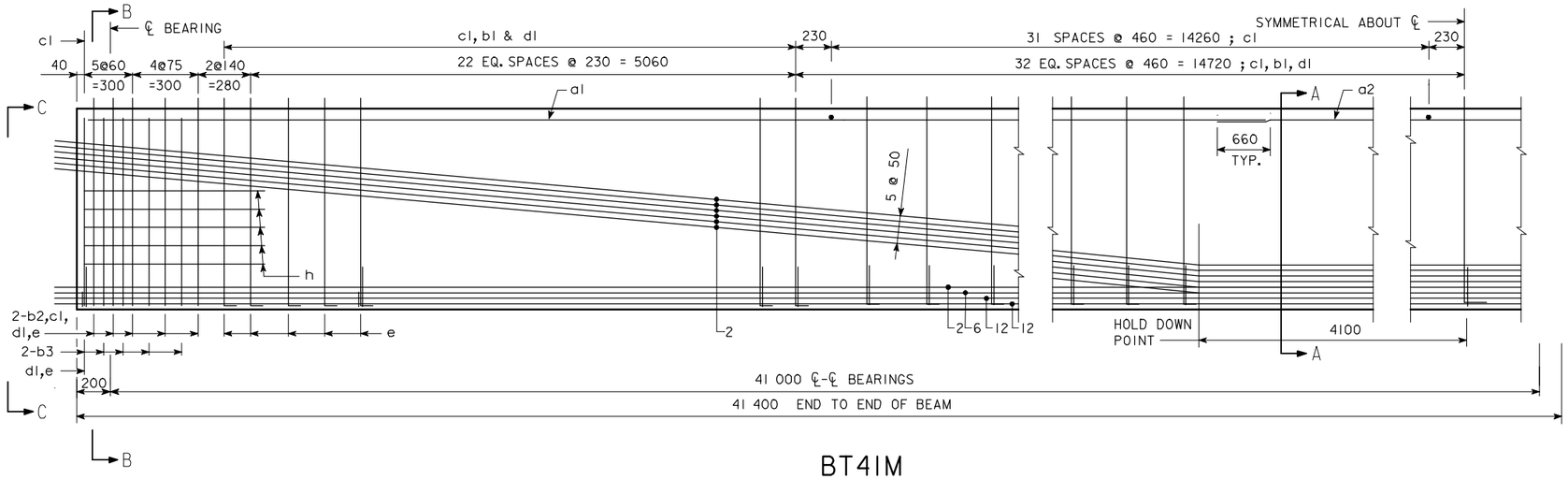

BT41M

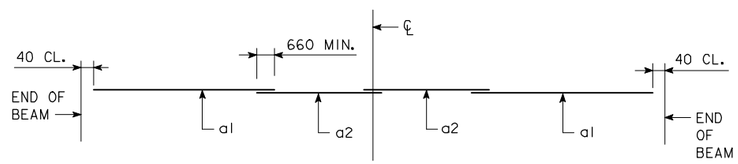

TOP FLANGE LONGIT. BAR LAYOUT

AREA = 508 600 mm²
$\bar{y}_b$ = 853 mm
I = 221 856 000 000 mm⁴

BEAM SECTION PROPERTIES

Δ DIMENSIONS AT END OF BEAM
ΔΔ EPOXY COATED BARS

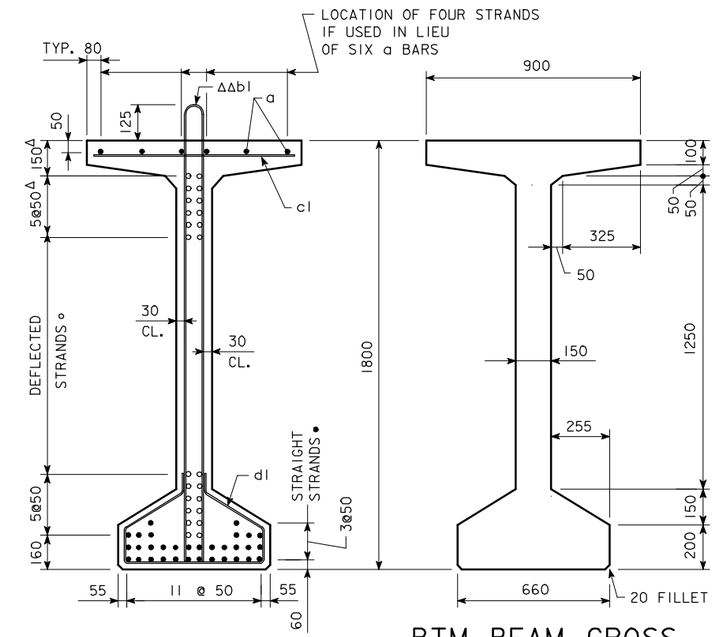

SECTION A-A

BTM BEAM CROSS SECTION

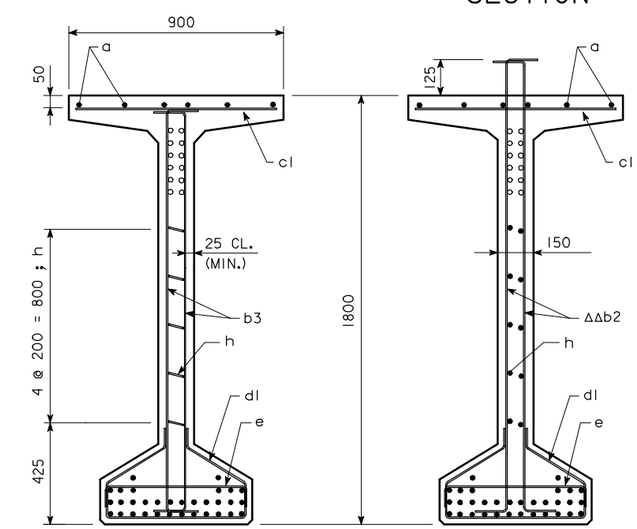

VIEW C-C

SECTION B-B

BT41M BEAM DETAILS

IOWA DEPARTMENT OF TRANSPORTATION - HIGHWAY DIVISION

DESIGN SHEET NO. ____ OF ____ FILE NO. _____ DESIGN NO. _____

REVISED 05-04 - b1, b2 BARS CHANGED TO EPOXY COATED. c1 MODIFIED TO STRAIGHT BAR.
HMBT4658.S01 - THIS SHEET ISSUED: 2-28-96

DESIGN TEAM	BULB TEE BEAM - 41 000 mm SPAN	STANDARD SHEET M4658	COUNTY	PROJECT NUMBER	SHEET NUMBER

10-FEB-2006 14:02 ajeffer W:\Projects\0000006002\BRFinal\MetricBeams.dgn mbt4658

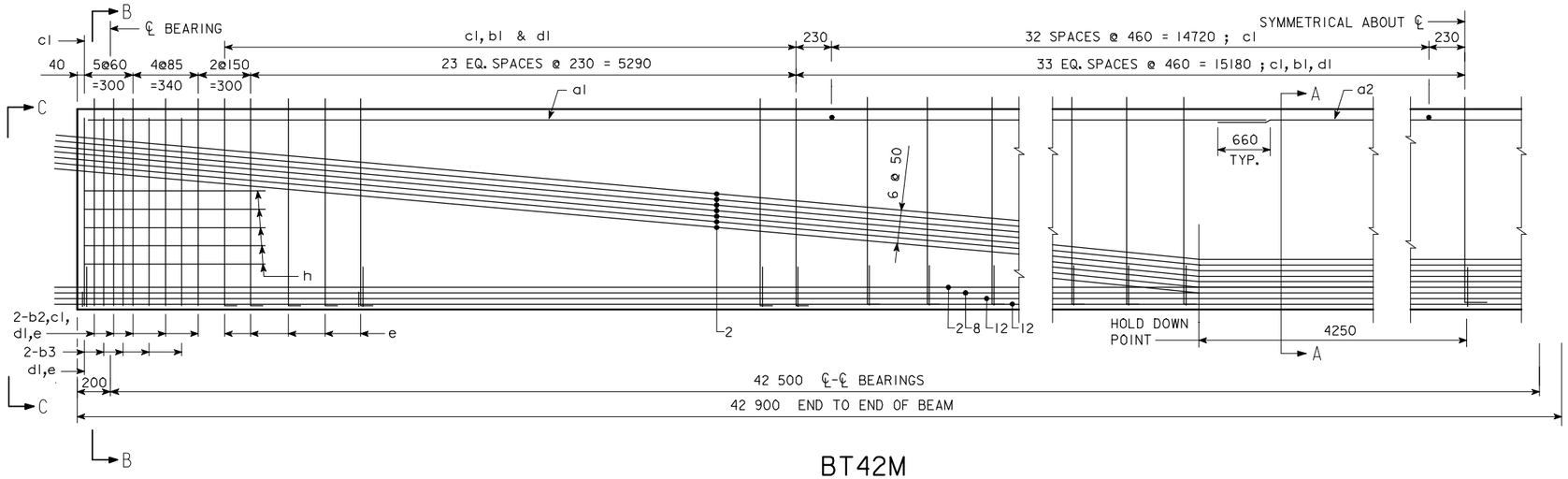

BT42M

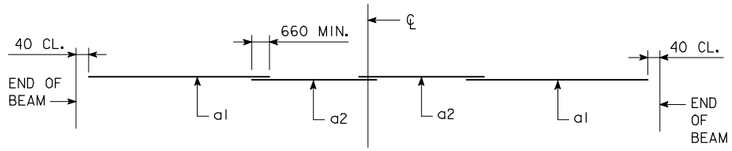

TOP FLANGE LONGIT. BAR LAYOUT

AREA = 508 600 mm²
$\bar{y}_b$ = 853 mm
I = 221 856 000 000 mm⁴

BEAM SECTION PROPERTIES

Δ DIMENSIONS AT END OF BEAM
ΔΔ EPOXY COATED BARS

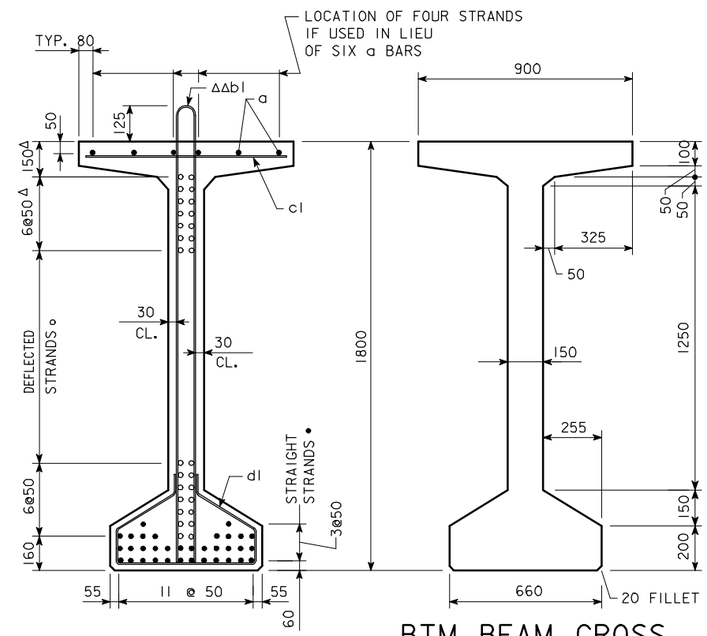

SECTION A-A

BTM BEAM CROSS SECTION

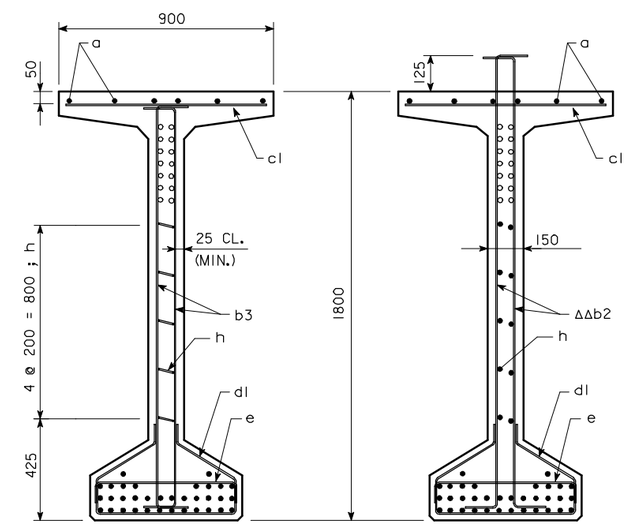

VIEW C-C

SECTION B-B

BT42M BEAM DETAILS

IOWA DEPARTMENT OF TRANSPORTATION - HIGHWAY DIVISION

DESIGN SHEET NO. ____ OF ____ FILE NO. _____ DESIGN NO. _____

REVISED 05-04 - BARS b1,b2 CHANGED TO EPOXY COATED. cl MODIFIED TO STRAIGHT BAR.
HMBT4659.SOI - THIS SHEET ISSUED: 2-28-96

DESIGN TEAM	BULB TEE BEAM - 42 500 mm SPAN	STANDARD SHEET M4659	COUNTY	PROJECT NUMBER	SHEET NUMBER

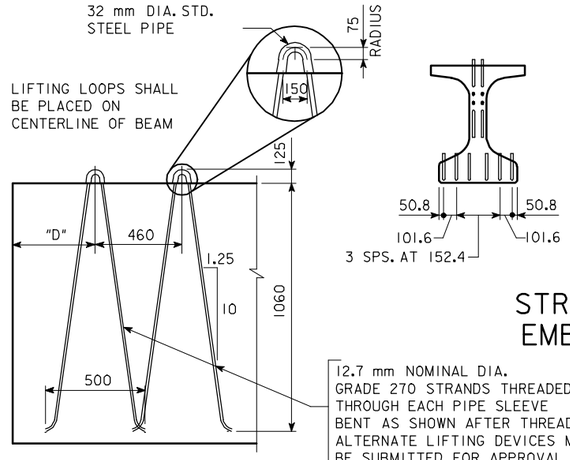

TYPICAL AT EACH END OF BEAM

LIFTING LOOP DETAIL

THE TOP AND BOTTOM ROWS OF THE DEFLECTED STRANDS ARE TO BE CUT WITH 460 mm PROJECTIONS WHICH ARE TO BE SHOP BENT AS SHOWN. THE REMAINING TOP DEFLECTED STRANDS ARE TO BE CUT WITH 175 mm PROJECTIONS.
SIX BOTTOM STRANDS ARE TO BE CUT WITH 460 mm PROJECTIONS WHICH ARE TO BE SHOP BENT AS SHOWN. THE REMAINING BOTTOM STRANDS ARE TO BE CUT OFF REASONABLY FLUSH WITH THE CONCRETE.

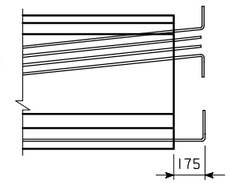

TYPICAL AT
BOTH BEAM ENDS

STRAND PROJECTION AT BEAM ENDS WHEN EMBEDDED IN CONCRETE END DIAPHRAGMS

DESIGN STRESSES:

DESIGN STRESSES FOR THE FOLLOWING MATERIALS ARE TO BE IN ACCORDANCE WITH AASHTO LRFD BRIDGE DESIGN SPECIFICATIONS FOR HIGHWAY BRIDGES, SERIES OF 1998.
REINFORCING STEEL IN ACCORDANCE WITH SECTION 5, GRADE 400.
CONCRETE IN ACCORDANCE WITH SECTION 5.
PRESTRESSING STEEL IN ACCORDANCE WITH SECTION 5, GRADE 270.

SPECIFICATIONS:

CONSTRUCTION: STANDARD SPECIFICATIONS OF THE IOWA DEPARTMENT OF TRANSPORTATION, CURRENT SERIES, WITH CURRENT APPLICABLE SPECIAL PROVISIONS AND SUPPLEMENTAL SPECIFICATIONS.

DESIGN: AASHTO LRFD, SERIES OF 1998, WITH MINOR MODIFICATIONS.

BTCM BEAM DATA

BTC BEAM	SPAN LENGTH ℄-℄ BEARING	OVERALL BEAM LENGTH (mm)	CONCRETE STRENGTH f'ci (MPa)	CONCRETE STRENGTH f'c (MPa)	STRAND SIZE DIA. (mm)	NO. OF STRAND STRAIGHT	NO. OF STRAND DEFLECTED	TOTAL INITIAL PRESTRESS ③ kN	HOLD DOWN FORCE-kN	CAMBER (mm) AT RELEASE	CAMBER (mm) AFTER LOSSES	DEFLECTION (mm) Δ_D ② IMMEDIATE ① (ELASTIC) Δ_I STEEL DIAPHRAGM	DEFLECTION (mm) Δ_D ② TIME (PLASTIC) Δ_T STEEL DIAPHRAGM	PERMISSIBLE MAXIMUM SPACING HL-93 LOADING STEEL DIAPHRAGM	MASS (kg)	CONCRETE (m^3)	REINFORCING STEEL (MASS-kg)
BTC9M	9140	9540	31.0	34.5	15.2	8	—	1514	—	3	5	—	—	2820	10 220	4.3	469
BTC10M	10 650	11 050	31.0	34.5	15.2	8	—	1514	—	4	6	1	—	2820	11 840	4.9	517
BTC12M	12 190	12 590	31.0	34.5	15.2	8	—	1514	—	4	7	2	—	2820	13 490	5.6	568
BTC13M	13 700	14 100	31.0	34.5	15.2	10	—	1892	—	7	12	3	1	2820	15 110	6.3	619
BTC15M	15 250	15 650	31.0	34.5	15.2	10	—	1892	—	8	13	4	1	2820	16 770	7.0	670
BTC16M	16 750	17 150	31.0	34.5	15.2	12	—	2269	—	11	20	7	2	2820	18 380	7.7	733
BTC18M	18 300	18 700	31.0	34.5	15.2	14	—	2651	—	14	26	9	2	2820	20 040	8.4	782
BTC19M	19 800	20 200	34.5	41.4	15.2	14	2	3029	51	16	29	12	3	2820	21 650	9.0	830
BTC21M	21 350	21 750	34.5	41.4	15.2	16	2	3407	47	22	39	16	4	2820	23 310	9.7	902
BTC22M	22 850	23 250	34.5	41.4	15.2	16	4	3785	89	26	46	21	5	2820	24 920	10.4	948
BTC24M	24 400	24 800	41.4	48.3	15.2	20	4	4542	83	34	60	25	6	2820	26 580	11.1	1022
BTC25M	25 900	26 300	41.4	48.3	15.2	22	4	4920	79	40	71	32	8	2820	28 190	11.7	1057
BTC27M	27 450	27 850	41.4	48.3	15.2	24	6	5676	104	50	89	41	10	2820	29 850	12.4	1105
BTC28M	28 950	29 350	44.8	51.7	15.2	28	6	6432	99	61	109	50	13	2820	31 460	13.1	1183
BTC30M	30 500	30 900	48.3	51.7	15.2	32	6	7193	94	70	124	60	15	2820	33 120	13.8	1277
BTC32M	32 000	32 400	51.7	55.2	15.2	36	8	8327	115	84	147	71	17	2820	34 730	14.5	1337
④ BTC33M	33 550	33 950	55.2	58.6	15.2	38	10	9083	129	90	160	82	20	2820	36 390	15.2	1386
④ BTC35M	35 050	35 450	55.2	58.6	15.2	38	12	9461	139	95	167	89	22	2515	38 000	15.8	1434

① DEFLECTIONS AT MID-SPAN DUE TO WEIGHT OF SLAB AND DIAPHRAGM. THE DEFLECTIONS SHOWN ARE FOR A SLAB (200 mm) AND HAUNCH (40 mm) WEIGHT OF:
14.10 kN/m FOR 2820 mm BEAM SPACING
12.65 kN/m FOR 2515 mm BEAM SPACING
AND ONE STEEL DIAPHRAGM (2.22 kN) AT ℄ OF SPAN.
FOR DIFFERENT SLAB AND DIAPHRAGM WEIGHTS, DEFLECTIONS WILL BE DIRECTLY PROPORTIONAL.
② DEFLECTIONS DUE TO THE COMBINED EFFECT OF CREEP DUE TO WEIGHT OF SLAB AND SHRINKAGE OF SLAB.
TOTAL BEAM DEFLECTIONS AT ℄ OF SPAN, Δ_D, DUE TO WEIGHT OF SLAB AND DIAPHRAGMS FOR DETAILING PURPOSE:
(A) $\Delta_D = \Delta_I + \Delta_T$ FOR SIMPLE SPAN.
(B) $\Delta_D = \Delta_I + \frac{3}{4}\Delta_T$ FOR END SPANS OF CONTINUOUS BRIDGE.
(C) $\Delta_D = \Delta_I + \frac{1}{2}\Delta_T$ FOR INTERIOR SPANS OF CONTINUOUS BRIDGE.
③ TOTAL INITIAL PRESTRESS IS BASED ON 72.6% f's, f's. = 1860 MPa AND As = 140.0 mm^2.
④ REQUIRES 27.5 MPa COMPRESSIVE STRENGTH FOR CAST-IN-PLACE SLAB CONCRETE.

BEAM NOTES:

THESE BEAMS ARE DESIGNED FOR AASHTO LIVE LOADS AS INDICATED IN ABOVE TABLE WITH AN ALLOWANCE OF 960 N PER SQUARE METER OF ROADWAY FOR FUTURE WEARING SURFACE.
HOLD DOWN POINTS FOR DEFLECTED STRANDS MAY BE MOVED TOWARD ENDS OF BEAM A DISTANCE OF 0.05 L MAXIMUM AT PRODUCER'S OPTION.
ALL PRESTRESSING STRANDS EXCEPT LIFTING LOOP STRANDS SHALL BE 15.2 mm NOMINAL DIAMETER (NOMINAL STEEL AREA = 140.0 mm^2) AND CONFORM TO ASTM A416 GRADE 270 LOW RELAXATION STRANDS. MINIMUM STRAND BREAKING STRENGTH SHALL BE 260.7 kN.
TOPS OF BEAMS ARE TO BE STRUCK OFF LEVEL AND INTENTIONALLY ROUGHENED TRANSVERSELY TO A FULL AMPLITUDE OF APPROXIMATELY 6 mm EXCEPT A 50 mm WIDE FINISH SHALL BE PROVIDED ON THE TOP EDGE ON ONE SIDE ONLY OF THE BEAM.
BEARINGS SHALL BE AS DETAILED ON OTHER DESIGN SHEETS.
BEAMS TO BE USED IN BRIDGES MADE CONTINUOUS BY THE POURED IN PLACE FLOOR, ARE TO BE AT LEAST 28 DAYS OLD BEFORE THE FLOOR IS PLACED UNLESS A SHORTER CURING TIME IS APPROVED BY THE BRIDGE ENGINEER.
THE PORTIONS OF THE PRESTRESSED BEAMS THAT ARE TO BE EMBEDDED IN THE ABUTMENT AND PIER DIAPHRAGMS SHALL BE ROUGHENED FOR A DISTANCE OF 250 mm FROM THE BEAM END BY SANDBLASTING OR OTHER APPROVED METHODS TO PROVIDE SUITABLE BOND BETWEEN THE BEAM AND THE DIAPHRAGM IN ACCORDANCE WITH ARTICLE 2403.14 OF THE SPECIFICATIONS.
UNLESS OTHERWISE NOTED ALL BEAMS ARE TO BE INCREASED IN LENGTH BY .0005L TO COMPENSATE FOR ELASTIC SHORTENING, CREEP AND SHRINKAGE.
FOR TRANSPORTING, THE ALLOWABLE OVERHANG IS SHOWN IN THE LIFTING LOOP TABLE.
THE CONTRACTOR SHALL ASSURE THE LATERAL STABILITY OF THE BEAMS DURING HANDLING, TRANSPORTING AND ERECTION BY PROVIDING TEMPORARY BRACING AS NEEDED.
ALL DIMENSIONS ARE IN MILLIMETERS (mm) UNLESS OTHERWISE NOTED OR SHOWN.
HOLES MUST BE CAST IN THE WEB TO ACCOMMODATE THE STEEL DIAPHRAGM ATTACHMENTS AS DETAILED ON THE STEEL DIAPHRAGM DETAIL SHEET.
IF SOLE PLATE IS REQUIRED FOR BEARING, SOLE PLATE IS TO BE SET IN FORMS WHEN BEAM IS CAST AND FORMED OUT BELOW TO EXCLUDE CONCRETE AS DETAILED ON THE BEARING SHEET.

LIFTING LOOP TABLE

BEAMS	LIFTING LOOPS EACH END	# OF STRANDS PER LOOP	D	BEAM OVERHANG
BTC9M-BTC13M	1	4	610	**
BTC15M-BTC22M	1	4	610	**
BTC24M-BTC28M	2	4	385	3350
BTC30M	2	4	1140	3655
BTC32M	2	4	1905	3655
BTC33M	2	4	2515	3655
BTC35M	2	4	2515	4265

** IN ACCORDANCE WITH STANDARD SPECIFICATION 2407.13.

NUMBER AND EXACT LOCATION OF COIL TIES TO BE AS DETAILED ON SPECIFIC BRIDGE DESIGN.

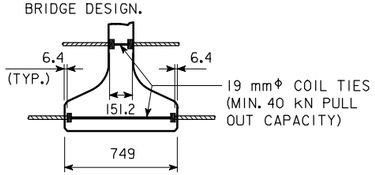

COIL TIE DETAIL

ΔΔ b2 AND b3 BARS TO BE EPOXY COATED
* b3 AND b4 BARS TO BE USED IN PAIRS

BENT BAR DETAILS

NOTE: ALL BAR DIMENSIONS ARE OUT TO OUT
D = PIN DIAMETER FOR BENDING
(UNLESS OTHERWISE SHOWN)
#13 BAR D= 50
#16 BAR D= 65
#19 BAR D= 115

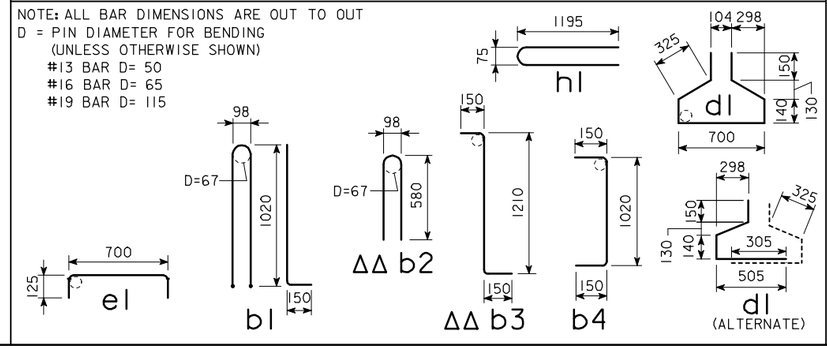

REINFORCING BAR LIST

BEAM BAR	SIZE	SHAPE	BTC9M NO.	LENGTH	BTC10M NO.	LENGTH	BTC12M NO.	LENGTH	BTC13M NO.	LENGTH	BTC15M NO.	LENGTH	BTC16M NO.	LENGTH	BTC18M NO.	LENGTH	BTC19M NO.	LENGTH	BTC21M NO.	LENGTH	BTC22M NO.	LENGTH	BTC24M NO.	LENGTH	BTC25M NO.	LENGTH	BTC27M NO.	LENGTH	BTC28M NO.	LENGTH	BTC30M NO.	LENGTH	BTC32M NO.	LENGTH	BTC33M NO.	LENGTH	BTC35M NO.	LENGTH	BEAM BAR	SIZE
a1	16	—	6	9360	6	10 870	6	12 410	12	7290	12	8070	12	8820	12	9590	12	10 340	12	11 120	12	11 870	12	6880	12	7630	12	8400	12	9150	12	9930	12	10 680	12	11 450	12	12 200	a1	16
a2	16	—	—	—	—	—	—	—	—	—	—	—	—	—	—	—	—	—	—	—	—	—	6	12 190	6	12 190	6	12 190	6	12 190	6	12 190	6	12 190	6	12 190	6	12 200	a2	16
b1	16		19	2380	23	2380	27	2380	31	2380	35	2380	39	2380	43	2380	47	2380	51	2380	57	2380	63	2380	65	2380	69	2380	73	2380	83	2380	87	2380	91	2380	95	2380	b1	16
ΔΔ b2	16		19	1200	23	1200	27	1200	31	1200	35	1200	39	1200	43	1200	47	1200	51	1200	57	1200	63	1200	65	1200	69	1200	73	1200	83	1200	87	1200	91	1200	95	1200	b2	16
ΔΔ* b3	19		32	1510	32	1510	32	1510	32	1510	32	1510	32	1510	32	1510	32	1510	36	1510	32	1510	32	1510	32	1510	32	1510	36	1510	36	1510	36	1510	36	1510	36	1510	b3	19
* b4	19		8	1320	8	1320	8	1320	8	1320	8	1320	12	1320	12	1320	12	1320	16	1320	16	1320	16	1320	16	1320	16	1320	20	1320	20	1320	24	1320	24	1320	24	1320	b4	19
c1	13	—	43	780	49	780	54	780	59	780	67	780	71	780	77	780	83	780	91	780	97	780	103	780	111	780	115	780	127	780	133	780	139	780	145	780	151	780	c1	13
d1	13		39	1930	43	1930	47	1930	51	1930	55	1930	61	1930	65	1930	69	1930	71	1930	75	1930	83	1930	85	1930	89	1930	93	1930	103	1930	107	1930	111	1930	115	1930	d1	13
e1	13		24	950	24	950	24	950	24	950	24	950	24	950	24	950	24	950	24	950	24	950	24	950	24	950	24	950	24	950	24	950	24	950	24	950	24	950	e1	13
h1	13		6	2420	6	2420	6	2420	6	2420	6	2420	6	2420	6	2420	6	2420	6	2420	6	2420	6	2420	6	2420	6	2420	6	2420	6	2420	6	2420	6	2420	6	2420	h1	13

BTCM BEAM DETAILS

IOWA DEPARTMENT OF TRANSPORTATION - HIGHWAY DIVISION
DESIGN SHEET NO. ____ OF ____ FILE NO. _____ DESIGN NO. _____

REVISED 2-05 - BEAM LENGTHENED TO ACCOMMODATE 200 mm END BEARING LOCATION. MASS AND CONCRETE QUANTITIES ADJUSTED.
HMBT4700.S01 - THIS SHEET ISSUED 05-04.

DESIGN TEAM	BULB TEE "C" BEAMS	STANDARD SHEET M4700	COUNTY	PROJECT NUMBER	SHEET NUMBER

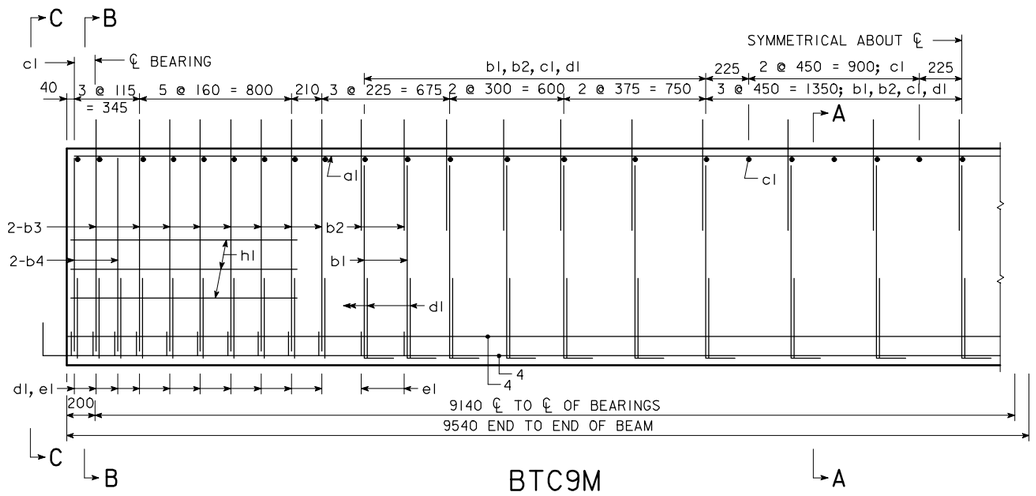

BTC9M

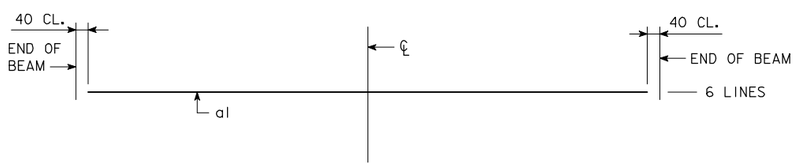

TOP FLANGE LONGITUDINAL BAR LAYOUT

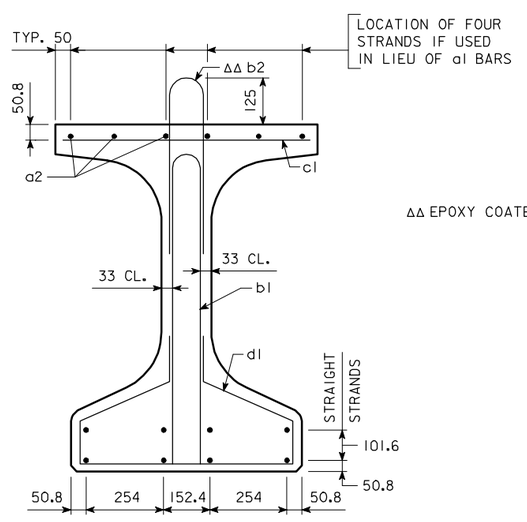

SECTION A-A

ΔΔ EPOXY COATED BARS

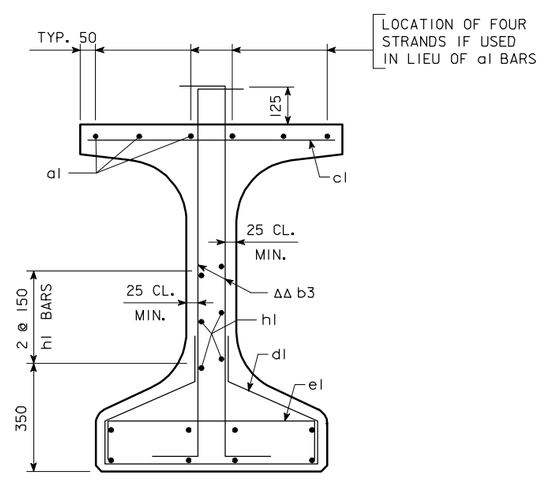

SECTION B-B

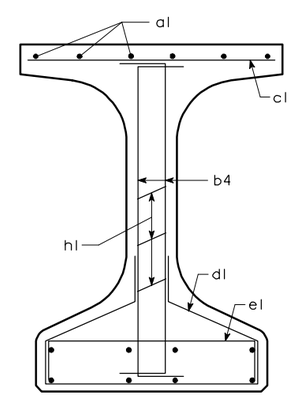

SECTION C-C

AREA = 446 358 mm²
$\bar{y}_b$ = 527 mm
I = 74 493 350 000 mm⁴

BEAM SECTION PROPERTIES

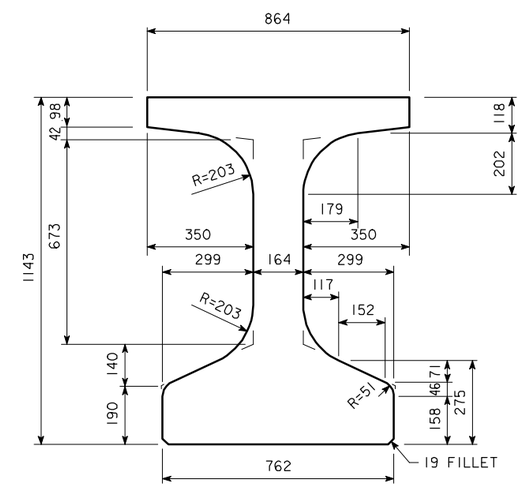

BTCM BEAM CROSS SECTION

BTC9M BEAM DETAILS

IOWA DEPARTMENT OF TRANSPORTATION - HIGHWAY DIVISION

DESIGN SHEET NO. ____ OF ____ FILE NO. _____ DESIGN NO. _____

DESIGN TEAM	BULB TEE "C" BEAM - 9140 mm SPAN	STANDARD SHEET M4701	COUNTY	PROJECT NUMBER	SHEET NUMBER

REVISED 2-05 - BEAM LENGTHENED TO ACCOMMODATE 200 mm END BEARING LOCATION.
HMBT4701.S01 - THIS SHEET ISSUED 05-04.

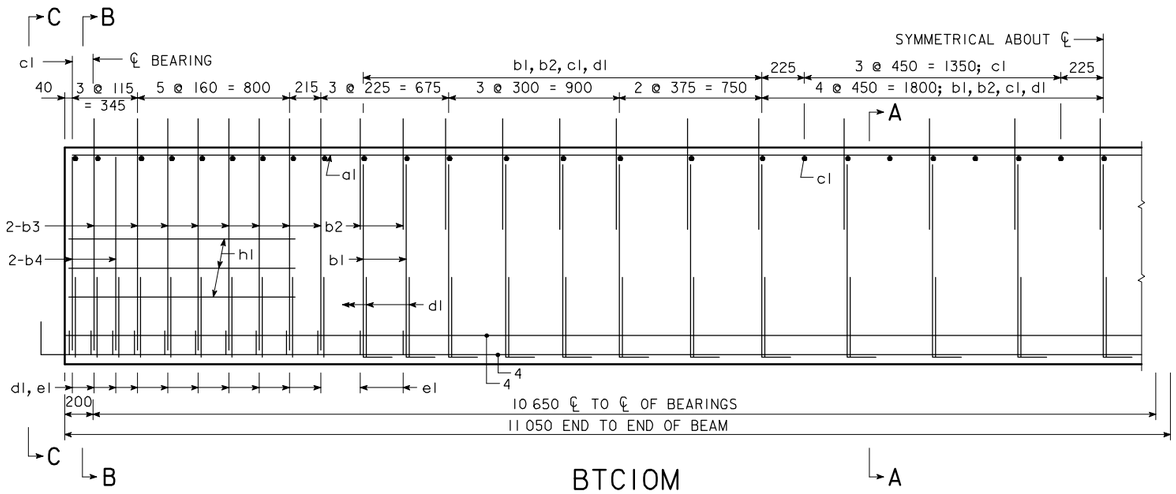

BTC10M

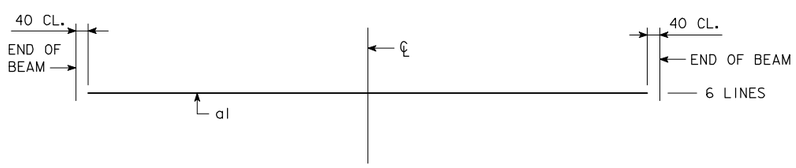

TOP FLANGE LONGITUDINAL BAR LAYOUT

AREA = 446 358 mm²
$\bar{y}_b$ = 527 mm
I = 74 493 350 000 mm⁴

BEAM SECTION PROPERTIES

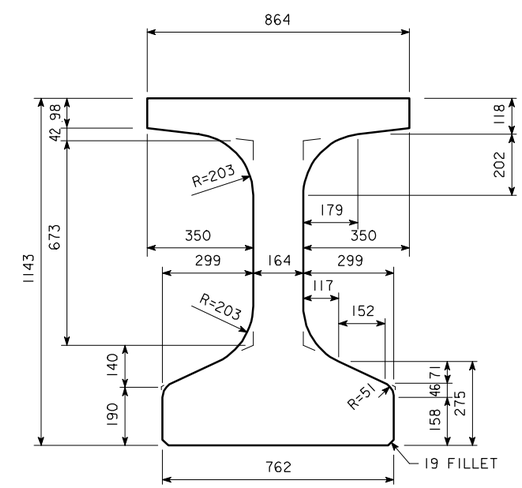

BTCM BEAM CROSS SECTION

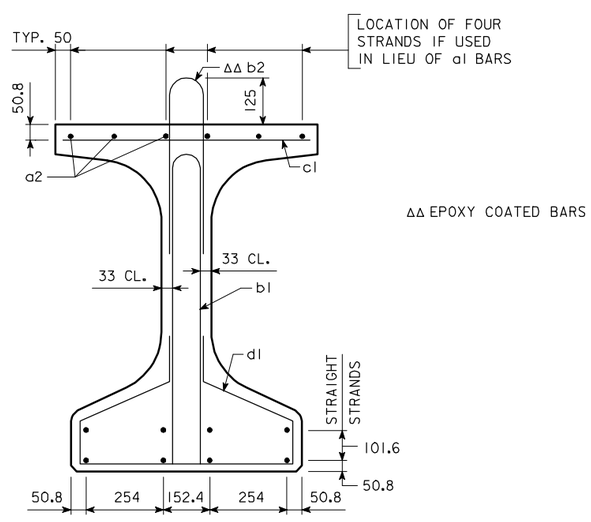

SECTION A-A

ΔΔ EPOXY COATED BARS

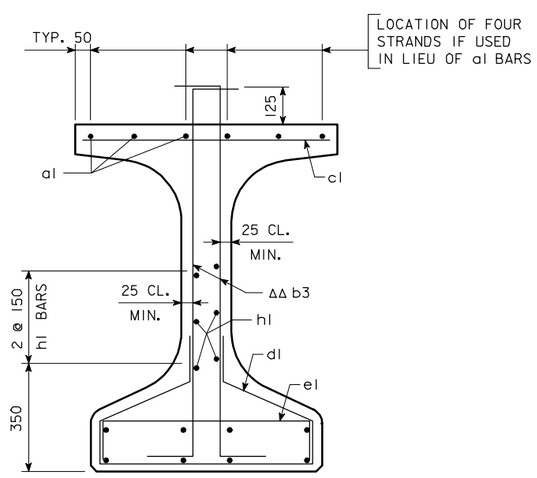

SECTION B-B

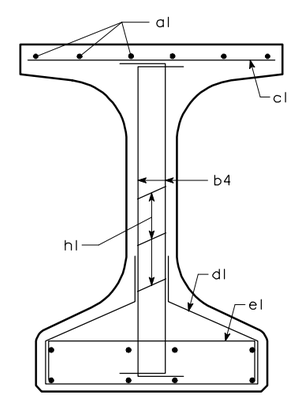

SECTION C-C

BTC10M BEAM DETAILS

IOWA DEPARTMENT OF TRANSPORTATION - HIGHWAY DIVISION
DESIGN SHEET NO. ____ OF ____ FILE NO. _____ DESIGN NO. _____

DESIGN TEAM	BULB TEE "C" BEAM - 10 650 mm SPAN	STANDARD SHEET M4702	COUNTY	PROJECT NUMBER	SHEET NUMBER

REVISED 2-05 - BEAM LENGTHENED TO ACCOMMODATE 200 mm END BEARING LOCATION.
HMBT4702.S01 - THIS SHEET ISSUED 05-04.

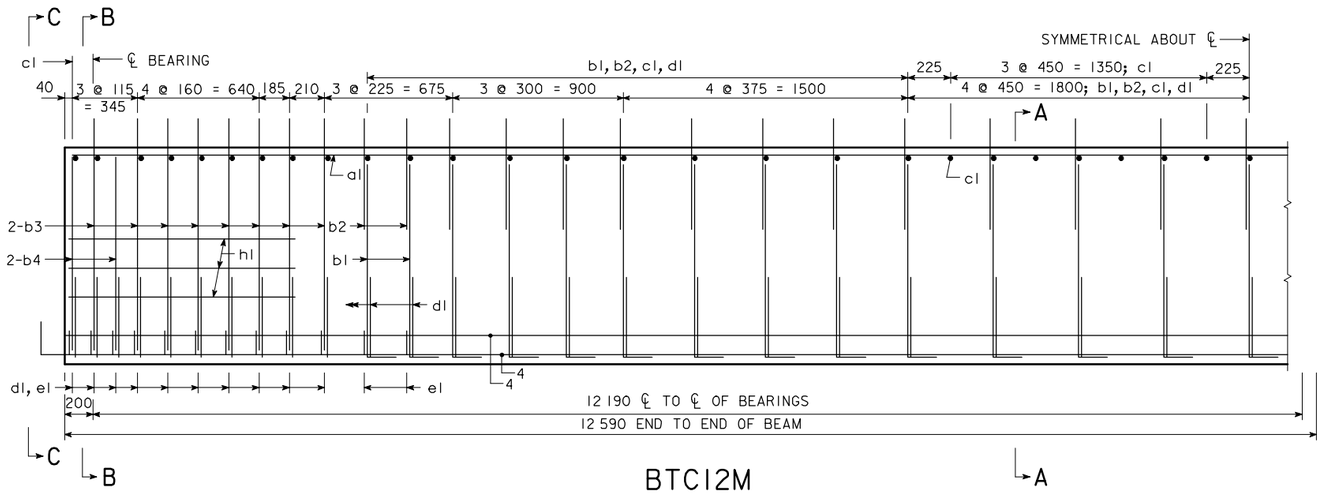

BTC12M

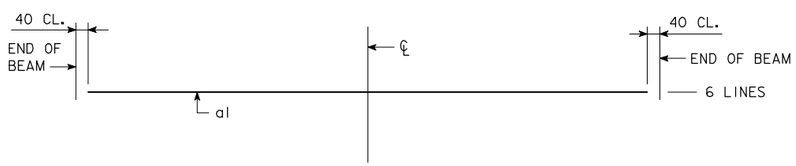

TOP FLANGE LONGITUDINAL BAR LAYOUT

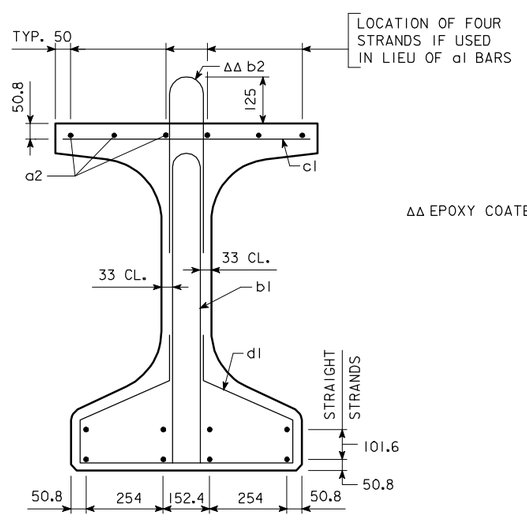

SECTION A-A

ΔΔ EPOXY COATED BARS

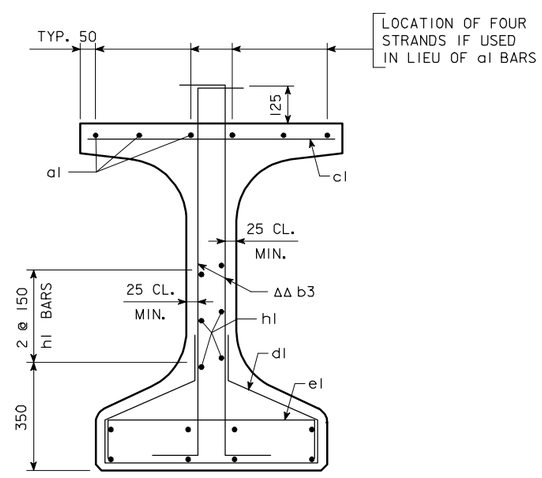

SECTION B-B

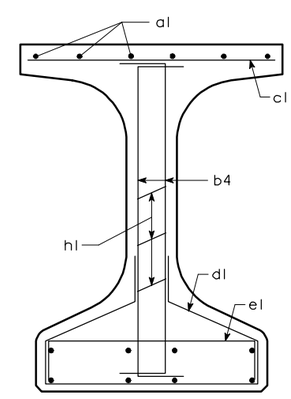

SECTION C-C

AREA = 446 358 mm²
$\bar{y}_b$ = 527 mm
I = 74 493 350 000 mm⁴

BEAM SECTION PROPERTIES

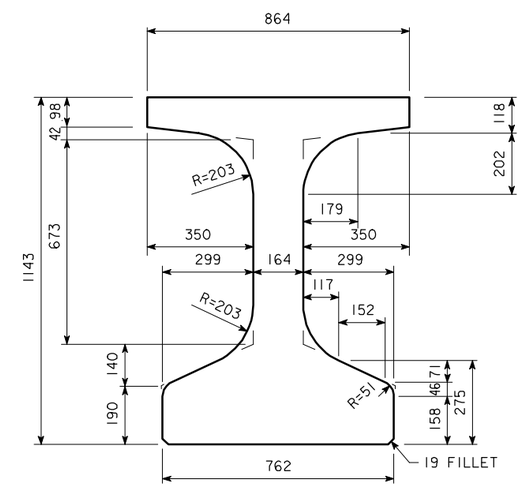

BTCM BEAM CROSS SECTION

BTC12M BEAM DETAILS

IOWA DEPARTMENT OF TRANSPORTATION - HIGHWAY DIVISION

DESIGN SHEET NO. ____ OF ____ FILE NO. _____ DESIGN NO. _____

DESIGN TEAM	BULB TEE "C" BEAM - 12 190 mm SPAN	STANDARD SHEET M4703	COUNTY	PROJECT NUMBER	SHEET NUMBER

REVISED 2-05 - BEAM LENGTHENED TO ACCOMMODATE 200 mm END BEARING LOCATION.
HMBT4703.S01 - THIS SHEET ISSUED 05-04.

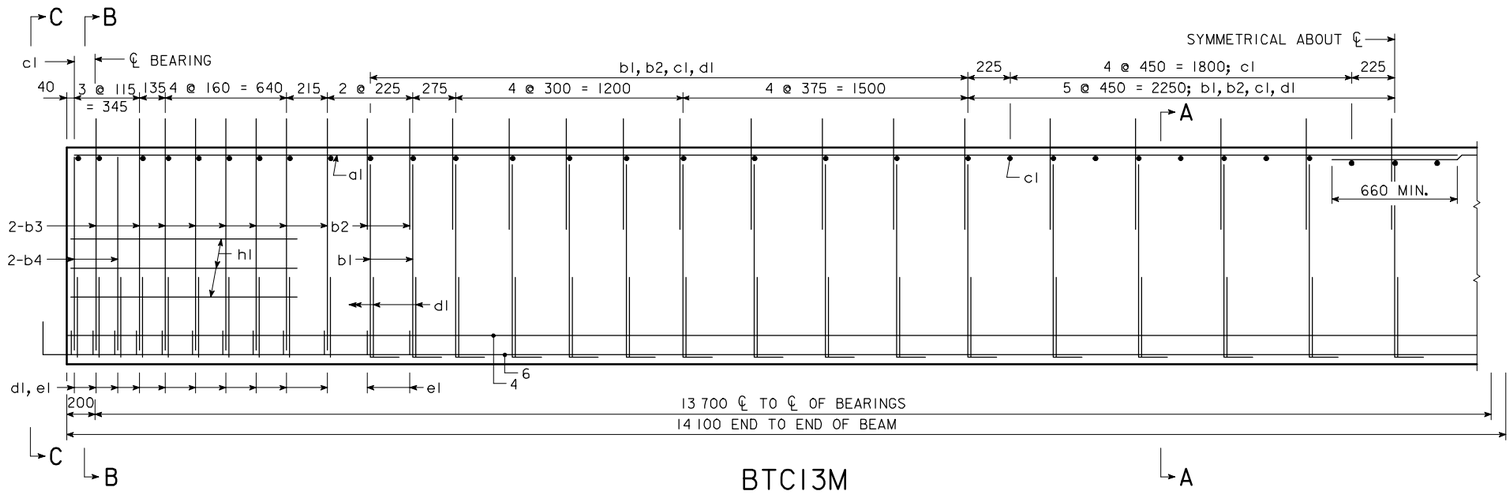

BTC13M

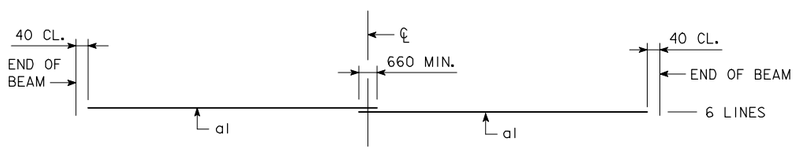

TOP FLANGE LONGITUDINAL BAR LAYOUT

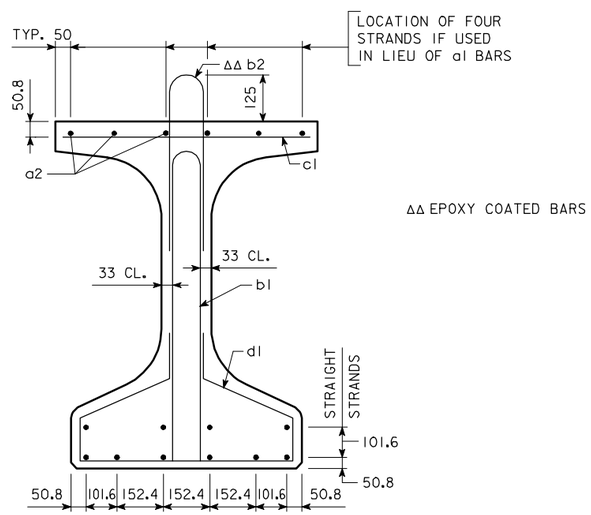

SECTION A-A

ΔΔ EPOXY COATED BARS

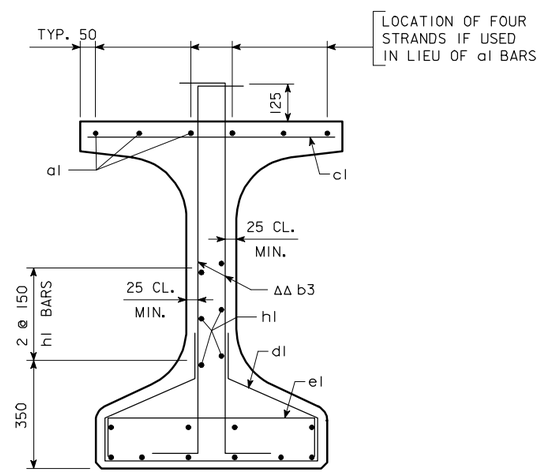

SECTION B-B

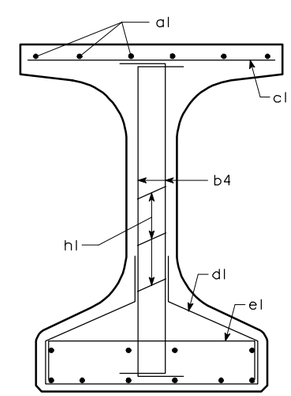

SECTION C-C

AREA = 446 358 mm²
$\bar{y}_b$ = 527 mm
I = 74 493 350 000 mm⁴

BEAM SECTION PROPERTIES

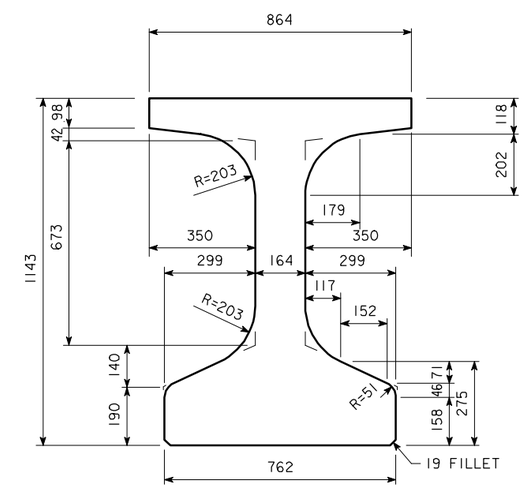

BTCM BEAM CROSS SECTION

BTC13M BEAM DETAILS

IOWA DEPARTMENT OF TRANSPORTATION - HIGHWAY DIVISION

DESIGN SHEET NO. ____ OF ____ FILE NO. _____ DESIGN NO. _____

REVISED 2-05 - BEAM LENGTHENED TO ACCOMMODATE 200 mm END BEARING LOCATION.
HMBT4704.S01 - THIS SHEET ISSUED 05-04.

DESIGN TEAM	BULB TEE "C" BEAM - 13 700 mm SPAN	STANDARD SHEET M4704	COUNTY	PROJECT NUMBER	SHEET NUMBER

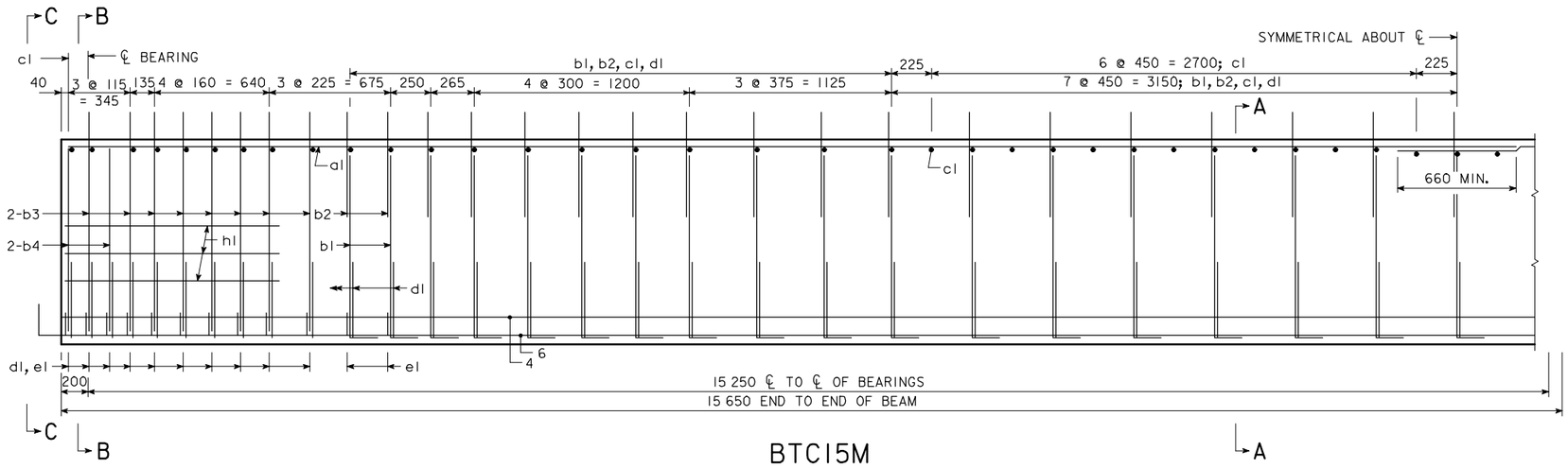

BTC15M

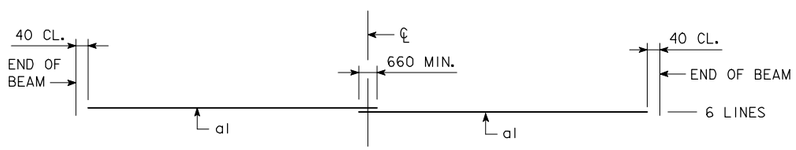

TOP FLANGE LONGITUDINAL BAR LAYOUT

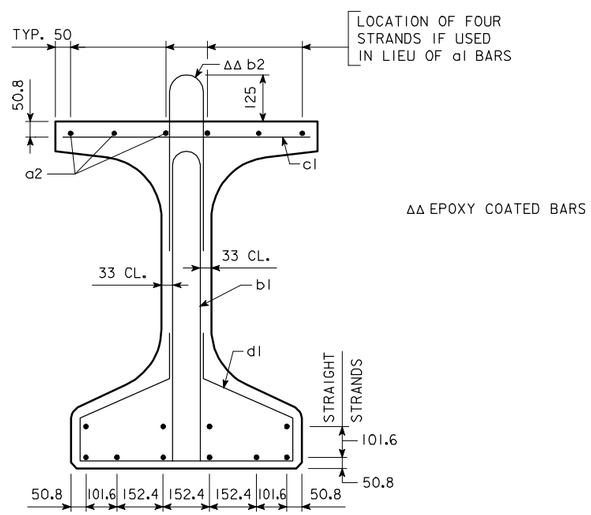

SECTION A-A

ΔΔ EPOXY COATED BARS

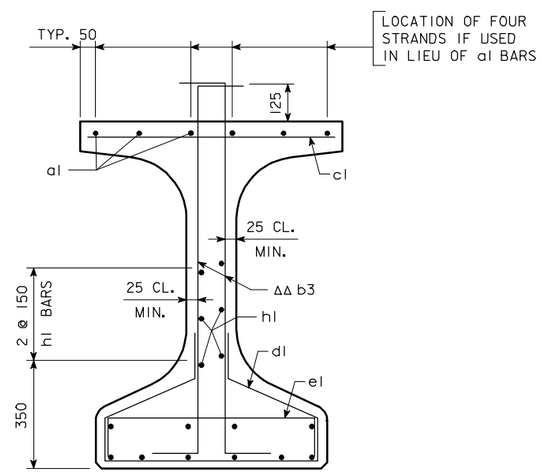

SECTION B-B

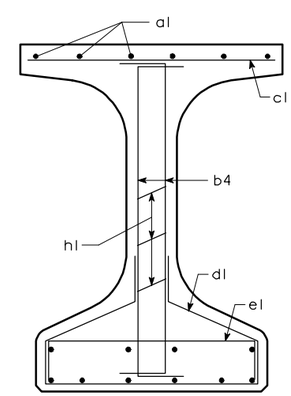

SECTION C-C

AREA = 446 358 mm^2
$\bar{y}_b$ = 527 mm
I = 74 493 350 000 mm^4

BEAM SECTION PROPERTIES

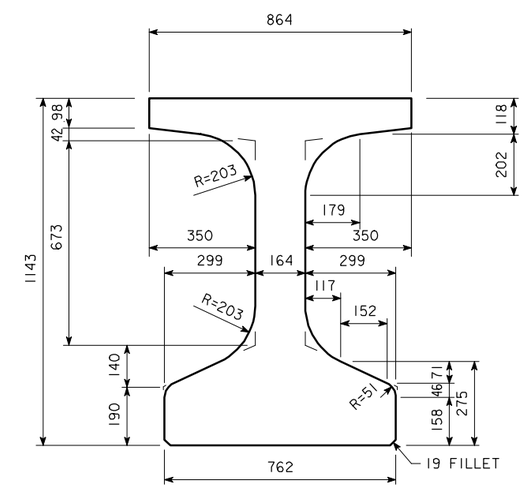

BTCM BEAM CROSS SECTION

BTC15M BEAM DETAILS

IOWA DEPARTMENT OF TRANSPORTATION - HIGHWAY DIVISION

DESIGN SHEET NO. ____ OF ____ FILE NO. _____ DESIGN NO. _____

REVISED 2-05 - BEAM LENGTHENED TO ACCOMMODATE 200 mm END BEARING LOCATION.
HMBT4705.S01 - THIS SHEET ISSUED 05-04.

DESIGN TEAM	BULB TEE "C" BEAM - 15 250 mm SPAN	STANDARD SHEET M4705	COUNTY	PROJECT NUMBER	SHEET NUMBER

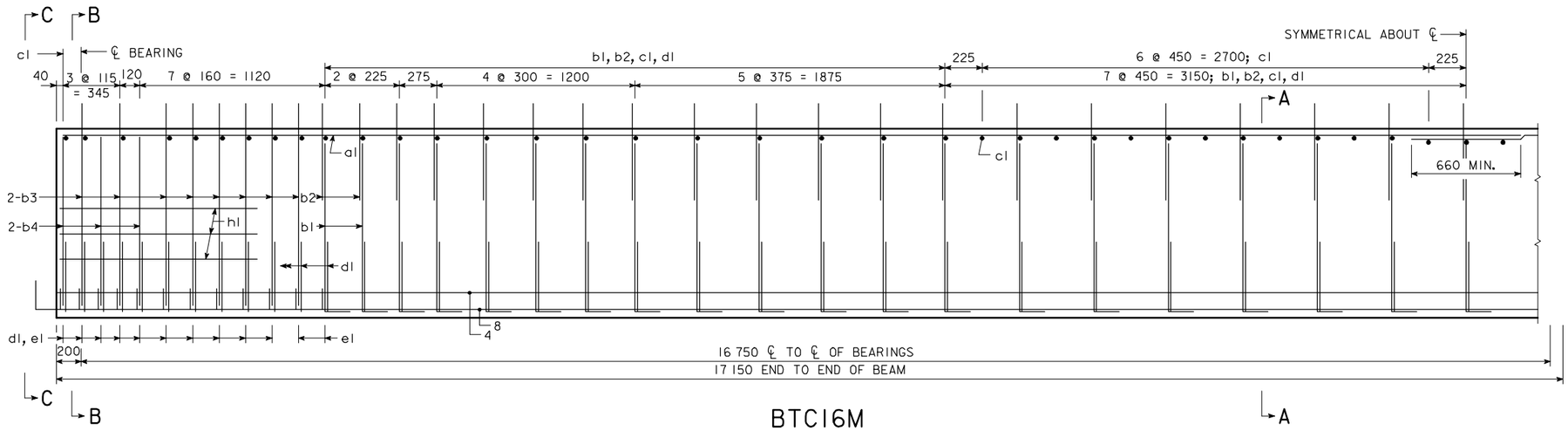

BTC16M

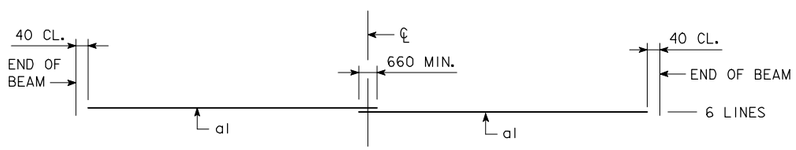

TOP FLANGE LONGITUDINAL BAR LAYOUT

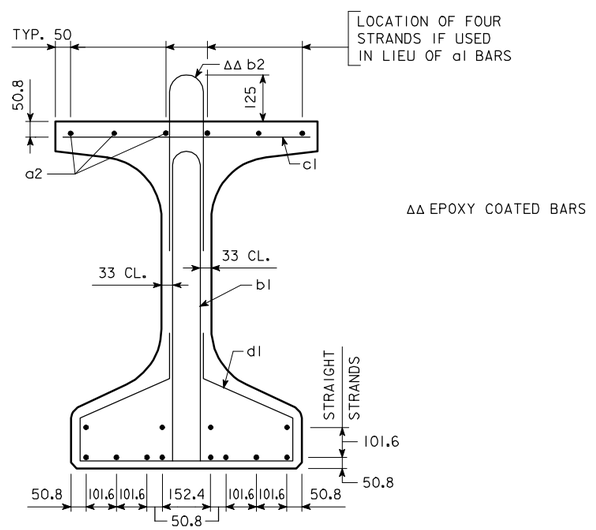

SECTION A-A

ΔΔ EPOXY COATED BARS

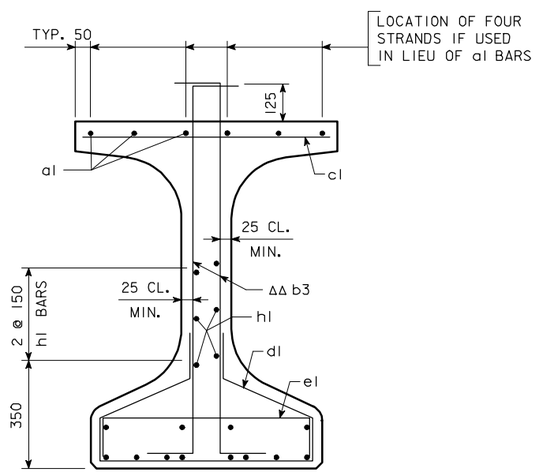

SECTION B-B

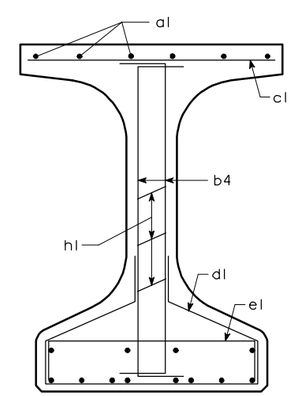

SECTION C-C

AREA = 446 358 mm²
$\bar{y}_b$ = 527 mm
I = 74 493 350 000 mm⁴

BEAM SECTION PROPERTIES

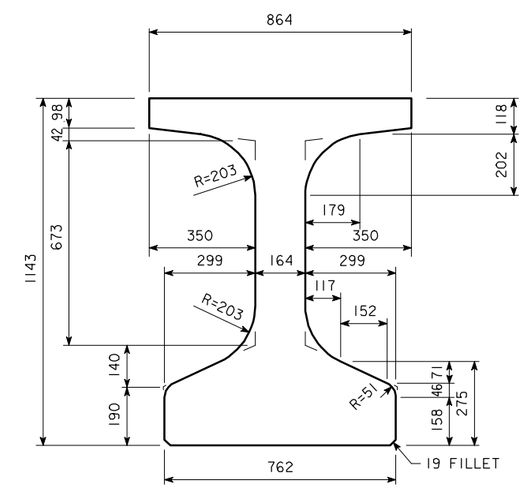

BTCM BEAM CROSS SECTION

BTC16M BEAM DETAILS

IOWA DEPARTMENT OF TRANSPORTATION - HIGHWAY DIVISION

DESIGN SHEET NO. ____ OF ____ FILE NO. _____ DESIGN NO. _____

REVISED 2-05 - BEAM LENGTHENED TO ACCOMMODATE 200 mm END BEARING LOCATION.
HMBT4706.S01 - THIS SHEET ISSUED 05-04.

DESIGN TEAM	BULB TEE "C" BEAM - 16 750 mm SPAN	STANDARD SHEET M4706	COUNTY	PROJECT NUMBER	SHEET NUMBER

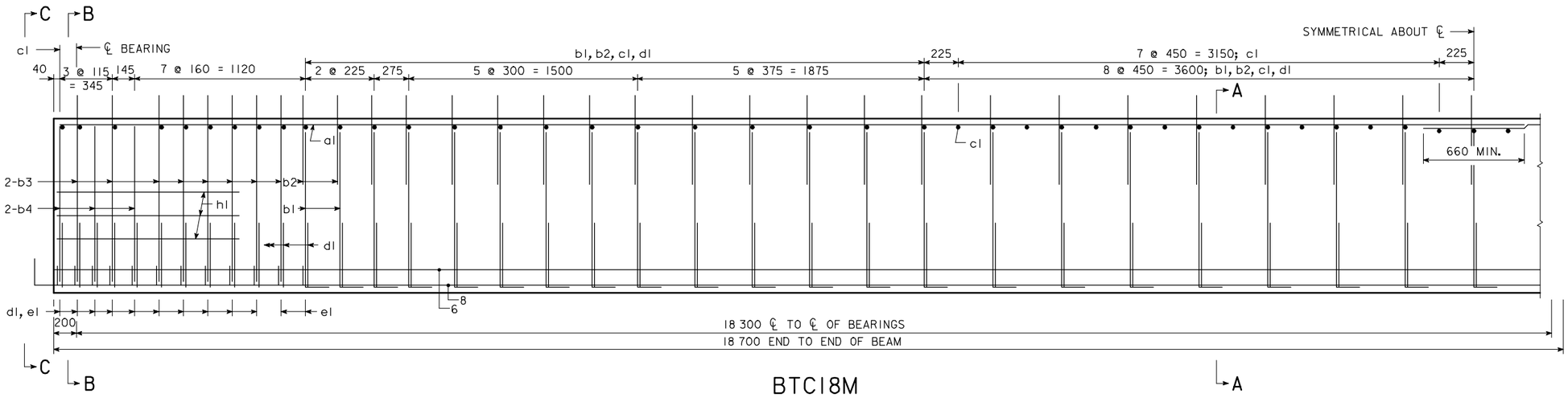

BTC18M

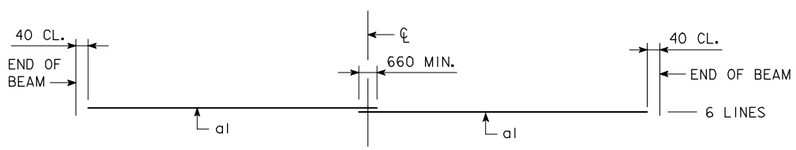

TOP FLANGE LONGITUDINAL BAR LAYOUT

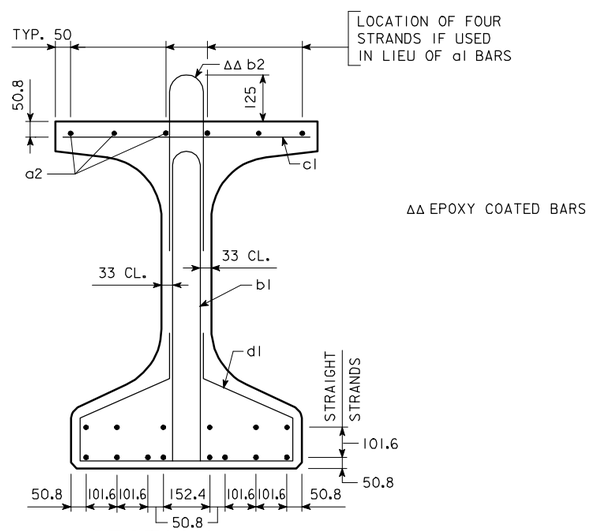

SECTION A-A

ΔΔ EPOXY COATED BARS

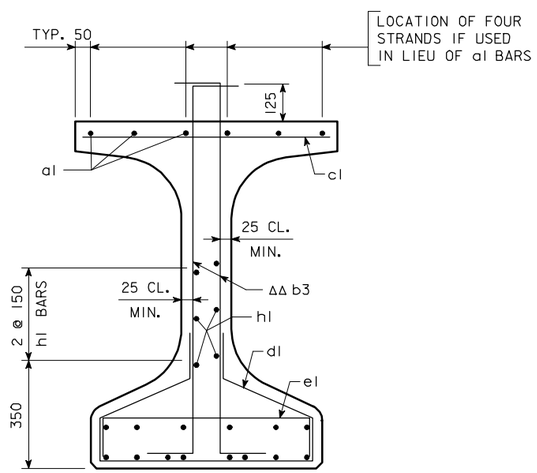

SECTION B-B

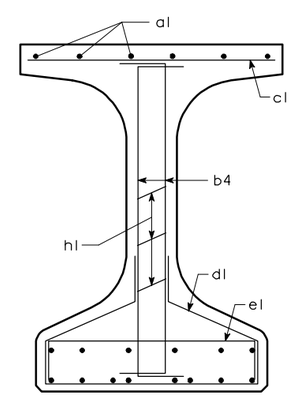

SECTION C-C

AREA = 446 358 mm²
$\bar{y}_b$ = 527 mm
I = 74 493 350 000 mm⁴

BEAM SECTION PROPERTIES

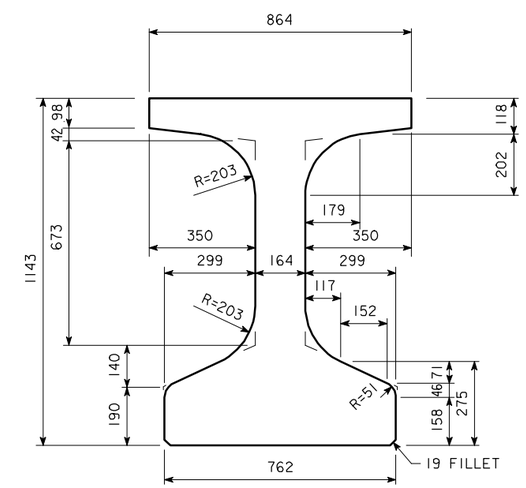

BTCM BEAM CROSS SECTION

BTC18M BEAM DETAILS

IOWA DEPARTMENT OF TRANSPORTATION - HIGHWAY DIVISION

DESIGN SHEET NO. ____ OF ____ FILE NO. _____ DESIGN NO. _____

REVISED 2-05 - BEAM LENGTHENED TO ACCOMMODATE 200 mm END BEARING LOCATION.
HMBT4707.S01 - THIS SHEET ISSUED 05-04.

DESIGN TEAM	BULB TEE "C" BEAM - 18 300 mm SPAN	STANDARD SHEET M4707	COUNTY	PROJECT NUMBER	SHEET NUMBER

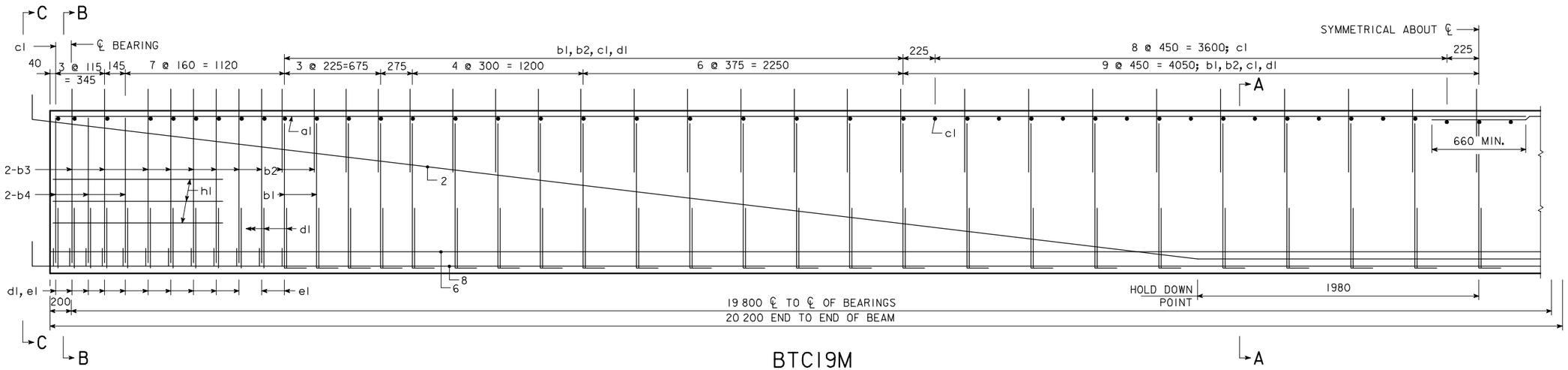

BTCI9M

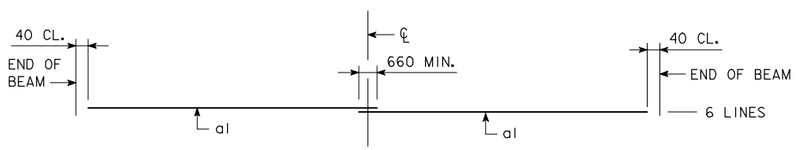

TOP FLANGE LONGITUDINAL BAR LAYOUT

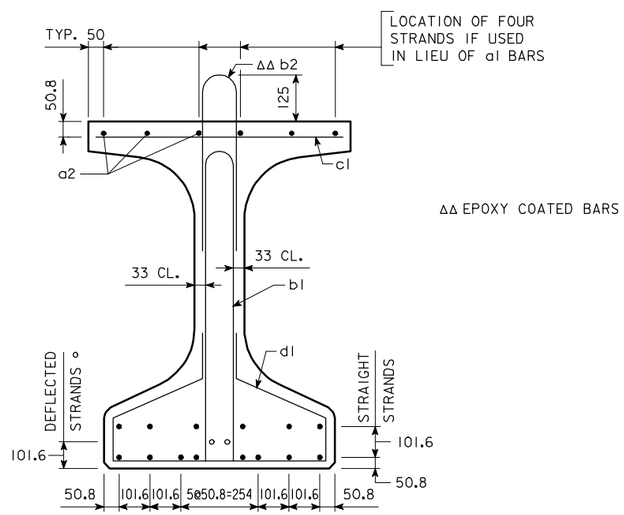

SECTION A-A

ΔΔ EPOXY COATED BARS

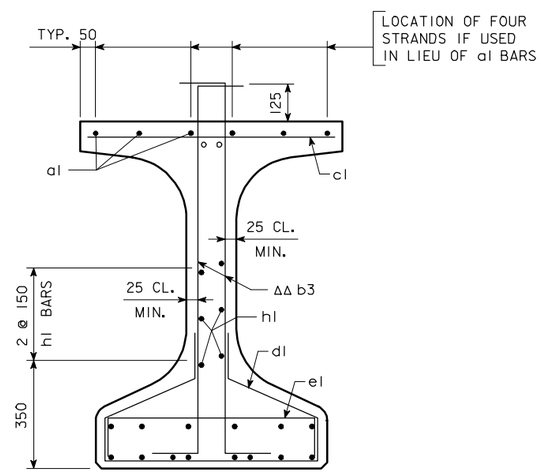

SECTION B-B

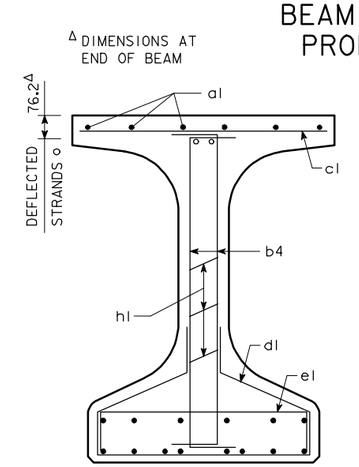

SECTION C-C

AREA = 446 358 mm²
$\bar{y}_b$ = 527 mm
$\bar{I}$ = 74 493 350 000 mm⁴

BEAM SECTION PROPERTIES

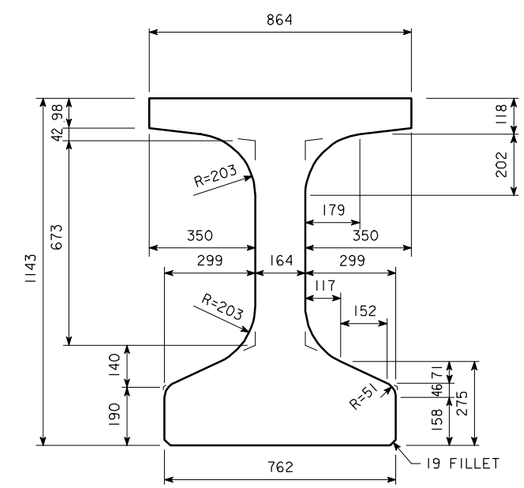

BTCM BEAM CROSS SECTION

BTCI9M BEAM DETAILS

IOWA DEPARTMENT OF TRANSPORTATION - HIGHWAY DIVISION

DESIGN SHEET NO. ____ OF ____ FILE NO. _____ DESIGN NO. _____

REVISED 2-05 - BEAM LENGTHENED TO ACCOMMODATE 200 mm END BEARING LOCATION.
HMBT4708.SOI - THIS SHEET ISSUED 05-04.

DESIGN TEAM	BULB TEE "C" BEAM - 19 800 mm SPAN	STANDARD SHEET M4708	COUNTY	PROJECT NUMBER	SHEET NUMBER

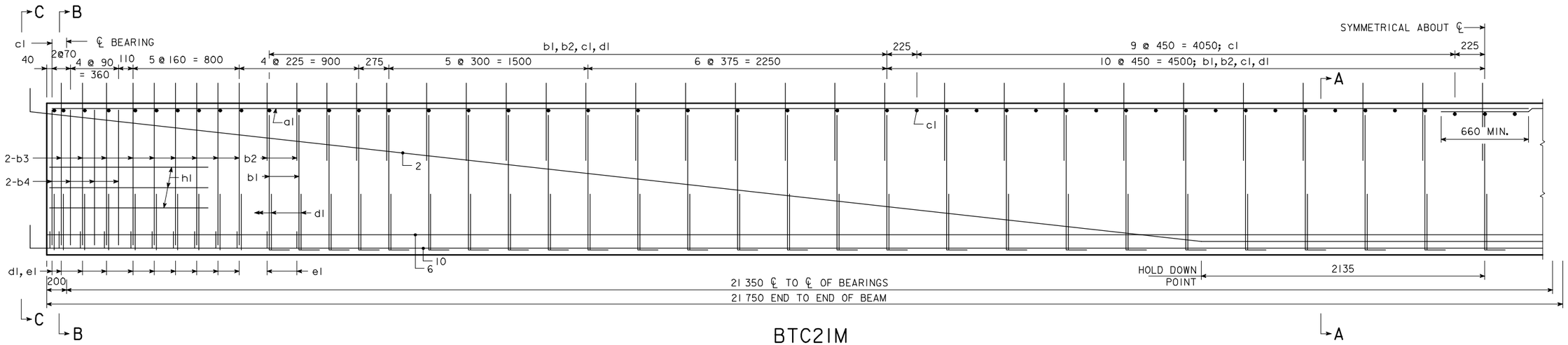

BTC21M

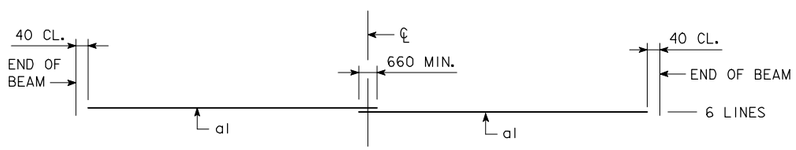

TOP FLANGE LONGITUDINAL BAR LAYOUT

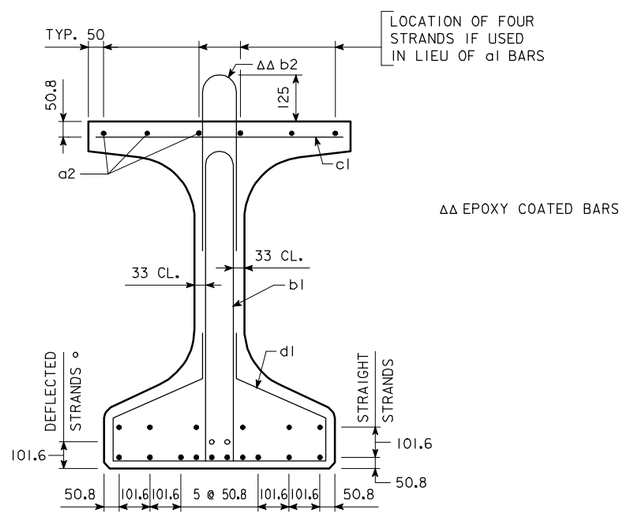

SECTION A-A

ΔΔ EPOXY COATED BARS

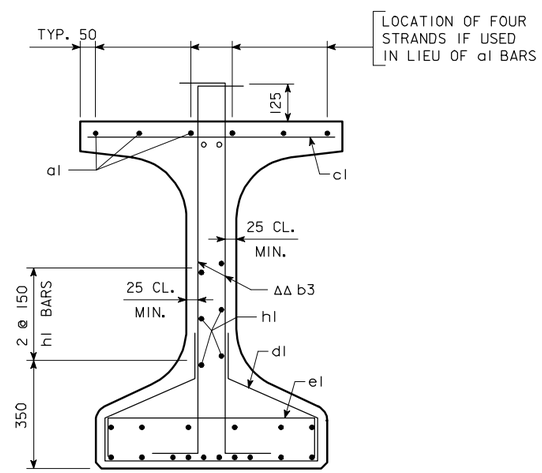

SECTION B-B

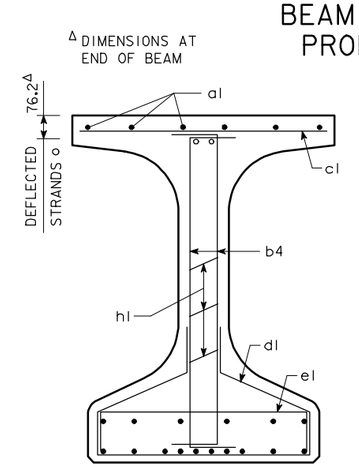

SECTION C-C

AREA = 446 358 mm²
$\bar{y}_b$ = 527 mm
$\bar{I}$ = 74 493 350 000 mm⁴

BEAM SECTION PROPERTIES

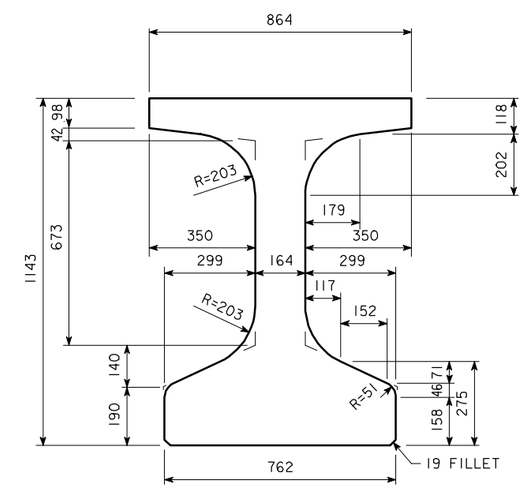

BTCM BEAM CROSS SECTION

BTC21M BEAM DETAILS

IOWA DEPARTMENT OF TRANSPORTATION - HIGHWAY DIVISION

DESIGN SHEET NO. ____ OF ____ FILE NO. _____ DESIGN NO. _____

REVISED 2-05 - BEAM LENGTHENED TO ACCOMMODATE 200 mm END BEARING LOCATION.
HMBT4709.S01 - THIS SHEET ISSUED 05-04.

DESIGN TEAM	BULB TEE "C" BEAM - 21 350 mm SPAN	STANDARD SHEET M4709	COUNTY	PROJECT NUMBER	SHEET NUMBER

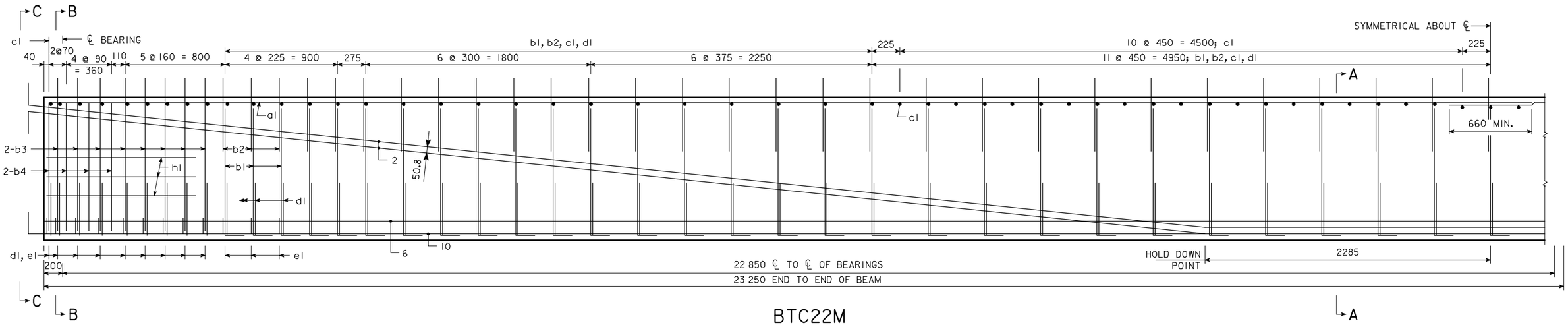

BTC22M

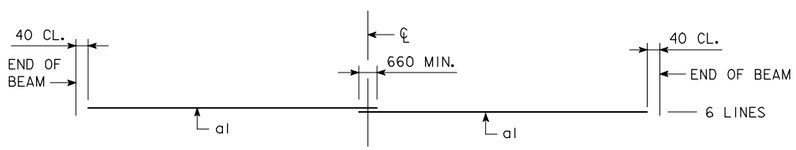

TOP FLANGE LONGITUDINAL BAR LAYOUT

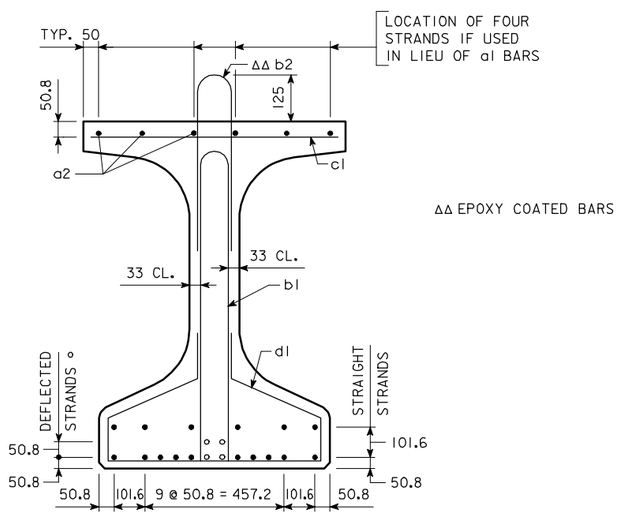

SECTION A-A

ΔΔ EPOXY COATED BARS

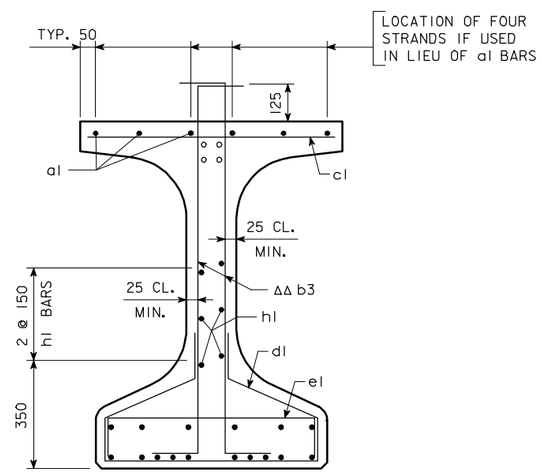

SECTION B-B

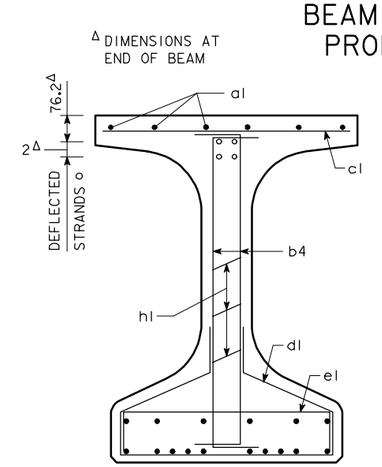

SECTION C-C

AREA = 446 358 mm²
$\bar{y}_b$ = 527 mm
$\bar{I}$ = 74 493 350 000 mm⁴

BEAM SECTION PROPERTIES

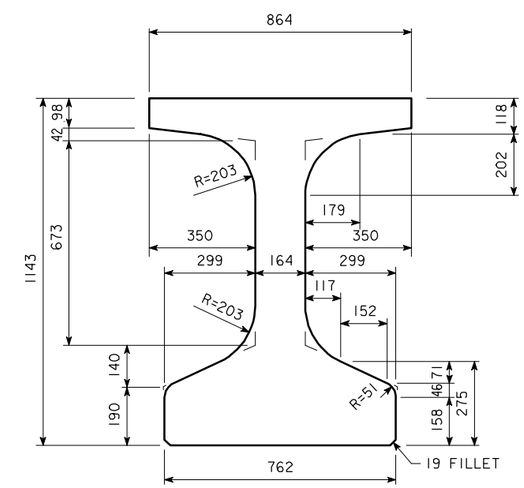

BTCM BEAM CROSS SECTION

BTC22M BEAM DETAILS

IOWA DEPARTMENT OF TRANSPORTATION - HIGHWAY DIVISION

DESIGN SHEET NO. ____ OF ____ FILE NO. _____ DESIGN NO. _____

DESIGN TEAM	BULB TEE "C" BEAM - 22 850 mm SPAN	STANDARD SHEET M4710	COUNTY	PROJECT NUMBER	SHEET NUMBER

REVISED 2-05 - BEAM LENGTHENED TO ACCOMMODATE 200 mm END BEARING LOCATION.
HMBT4710.S01 - THIS SHEET ISSUED 05-04.

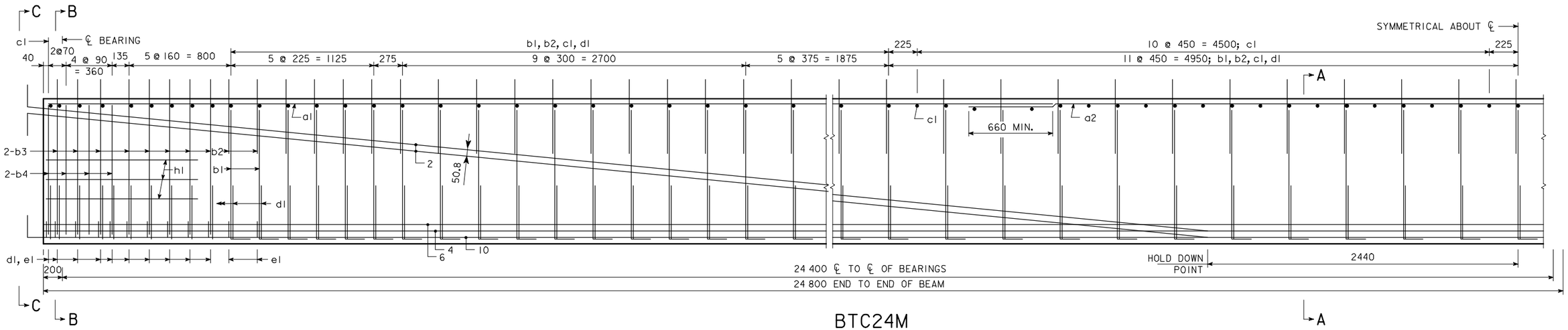

BTC24M

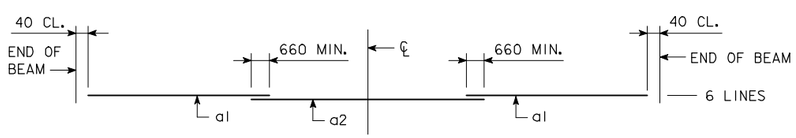

TOP FLANGE LONGITUDINAL BAR LAYOUT

AREA = 446 358 mm²
$\bar{y}_b$ = 527 mm
I = 74 493 350 000 mm⁴

BEAM SECTION PROPERTIES

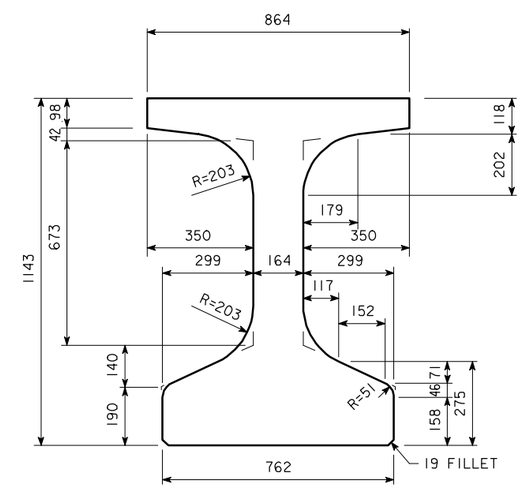

BTCM BEAM CROSS SECTION

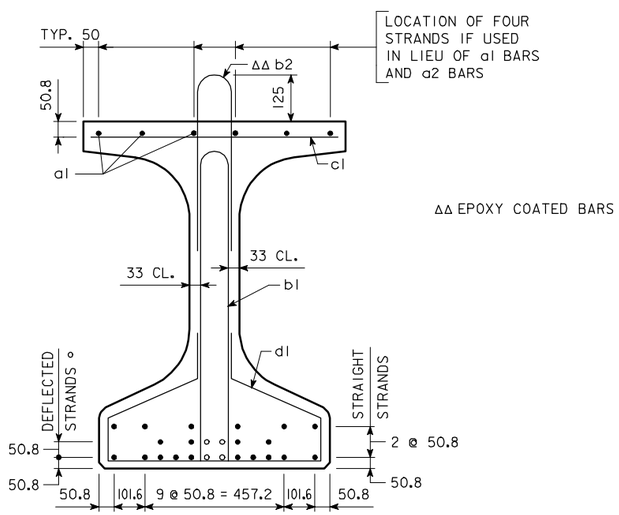

SECTION A-A

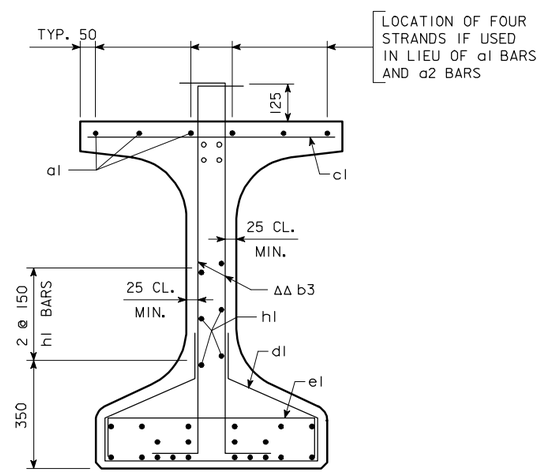

SECTION B-B

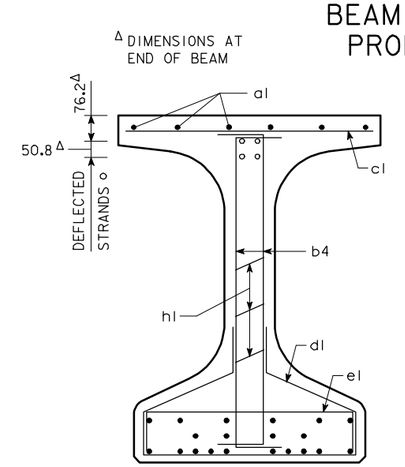

SECTION C-C

BTC24M BEAM DETAILS

IOWA DEPARTMENT OF TRANSPORTATION - HIGHWAY DIVISION

DESIGN SHEET NO. ____ OF ____ FILE NO. _____ DESIGN NO. _____

DESIGN TEAM	BULB TEE "C" BEAM - 24 400 mm SPAN	STANDARD SHEET M4711	COUNTY	PROJECT NUMBER	SHEET NUMBER

REVISED 2-05 - BEAM LENGTHENED TO ACCOMMODATE 200 mm END BEARING LOCATION.
HMBT4711.S01 - THIS SHEET ISSUED 05-04.

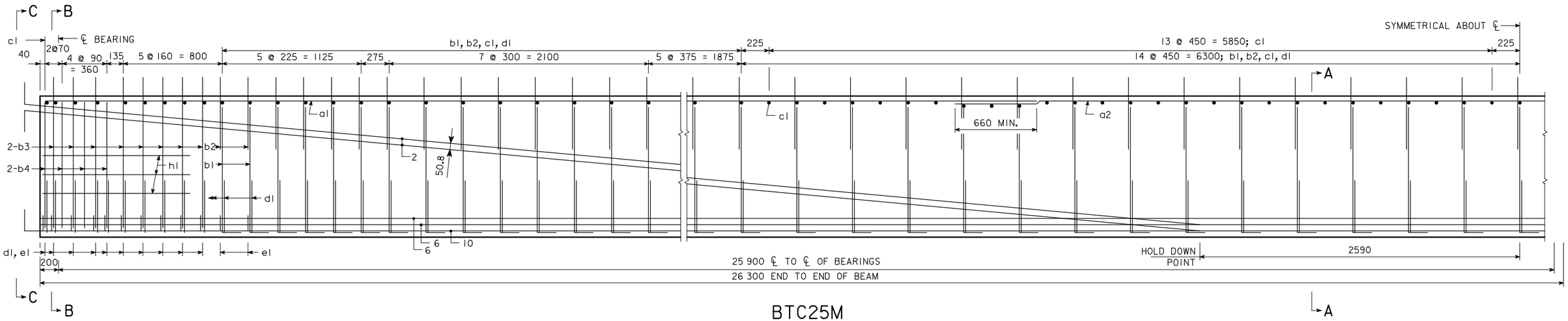

BTC25M

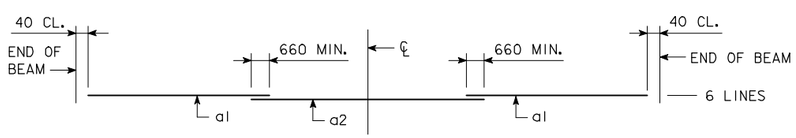

TOP FLANGE LONGITUDINAL BAR LAYOUT

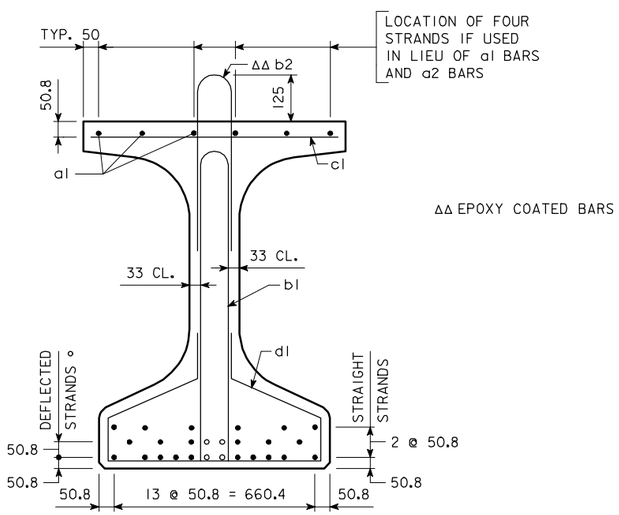

SECTION A-A

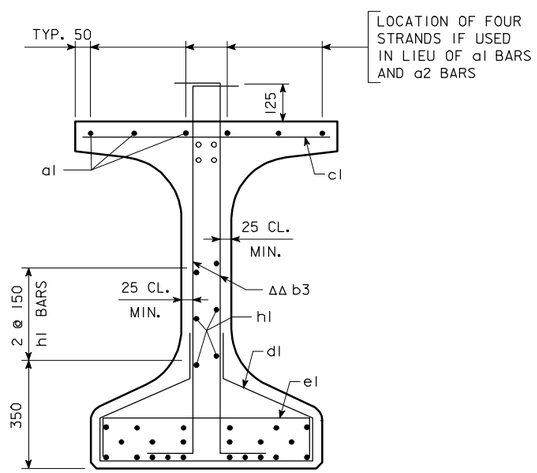

SECTION B-B

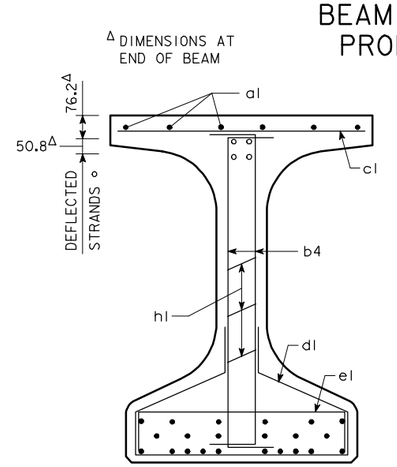

SECTION C-C

AREA = 446 358 mm²
$\bar{y}_b$ = 527 mm
$\bar{I}$ = 74 493 350 000 mm⁴

BEAM SECTION PROPERTIES

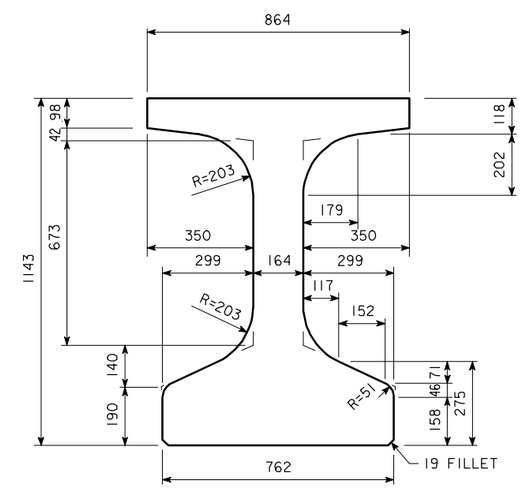

BTCM BEAM CROSS SECTION

BTC25M BEAM DETAILS

IOWA DEPARTMENT OF TRANSPORTATION - HIGHWAY DIVISION

DESIGN SHEET NO. ____ OF ____ FILE NO. _____ DESIGN NO. _____

REVISED 2-05 - BEAM LENGTHENED TO ACCOMMODATE 200 mm END BEARING LOCATION.
HMBT4712.S01 - THIS SHEET ISSUED 05-04.

DESIGN TEAM	BULB TEE "C" BEAM - 25 900 mm SPAN	STANDARD SHEET M4712	COUNTY	PROJECT NUMBER	SHEET NUMBER

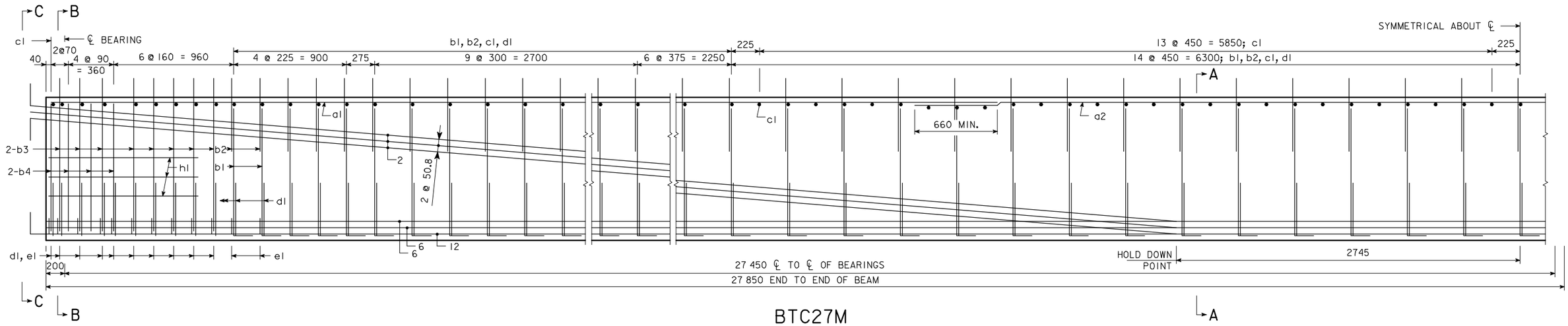

BTC27M

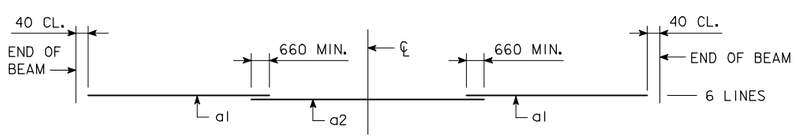

TOP FLANGE LONGITUDINAL BAR LAYOUT

AREA = 446 358 mm²
$\bar{y}_b$ = 527 mm
I = 74 493 350 000 mm⁴

BEAM SECTION PROPERTIES

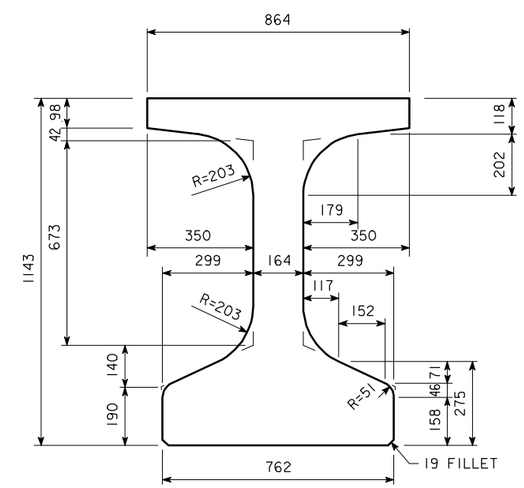

BTCM BEAM CROSS SECTION

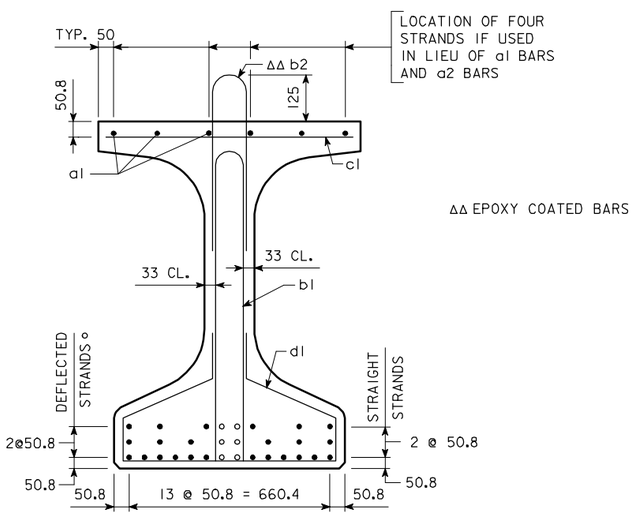

SECTION A-A

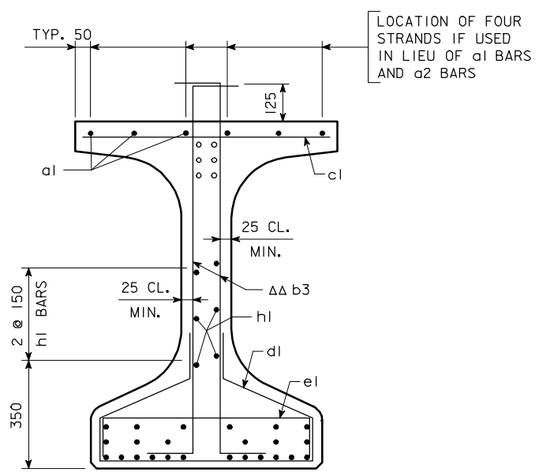

SECTION B-B

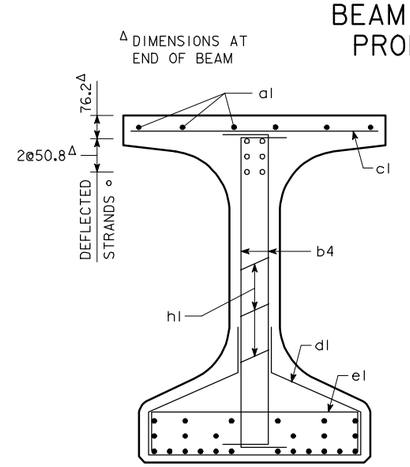

SECTION C-C

REVISED 2-05 - BEAM LENGTHENED TO ACCOMMODATE 200 mm END BEARING LOCATION.
HMBT4713.S01 - THIS SHEET ISSUED 05-04.

BTC27M BEAM DETAILS

IOWA DEPARTMENT OF TRANSPORTATION - HIGHWAY DIVISION

DESIGN SHEET NO. ____ OF ____ FILE NO. _____ DESIGN NO. _____

DESIGN TEAM	BULB TEE "C" BEAM - 27 450 mm SPAN	STANDARD SHEET M4713	COUNTY	PROJECT NUMBER	SHEET NUMBER

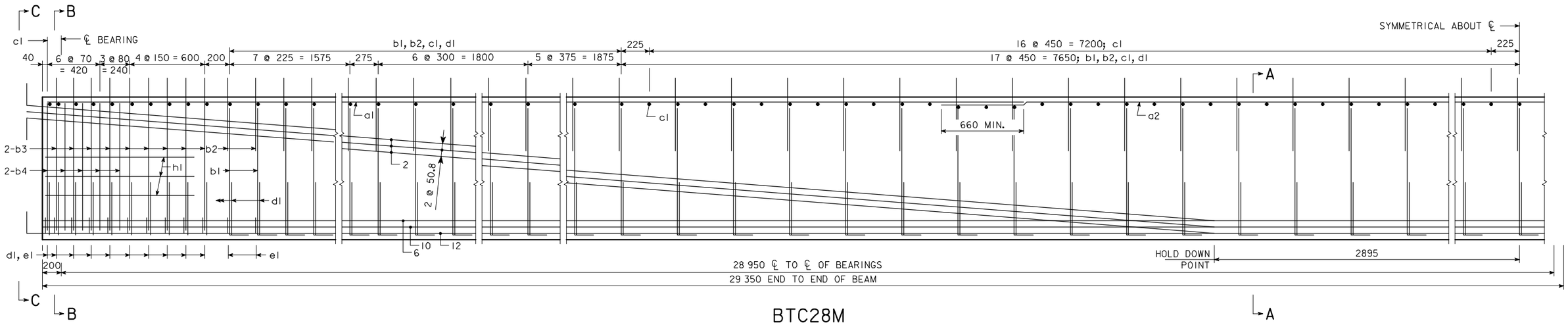

BTC28M

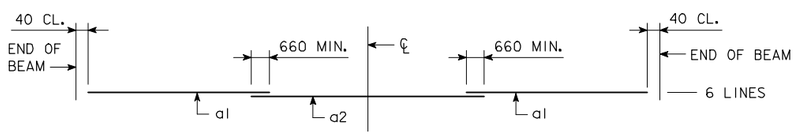

TOP FLANGE LONGITUDINAL BAR LAYOUT

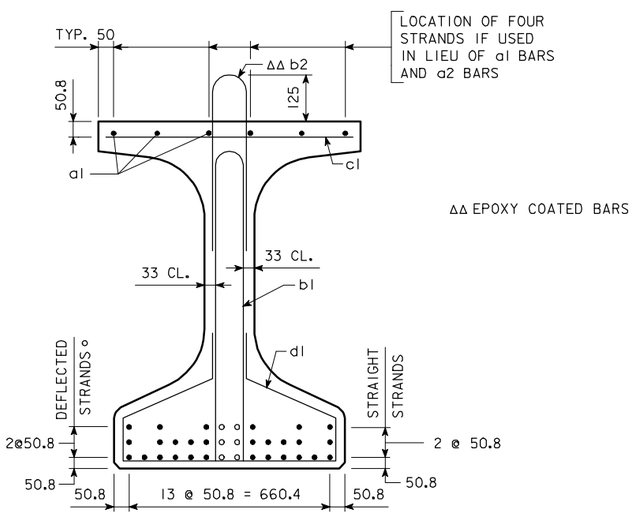

SECTION A-A

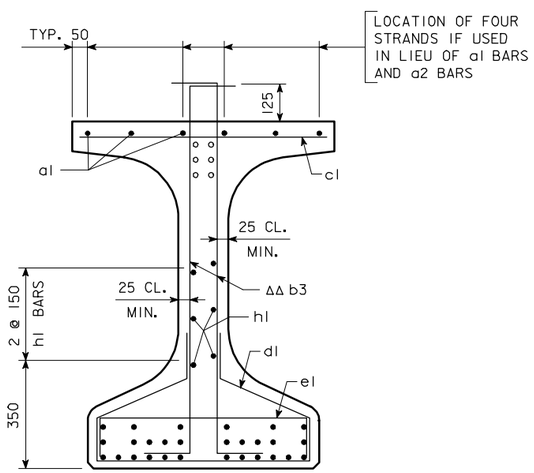

SECTION B-B

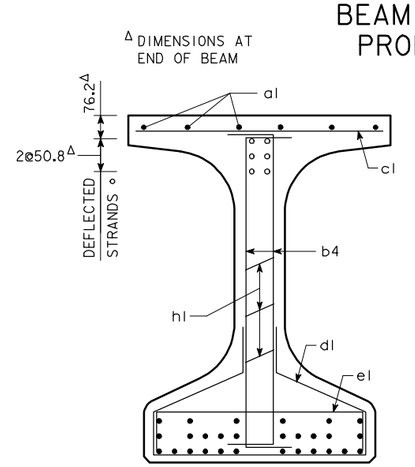

SECTION C-C

AREA = 446 358 mm²
$\bar{y}_b$ = 527 mm
I = 74 493 350 000 mm⁴

BEAM SECTION PROPERTIES

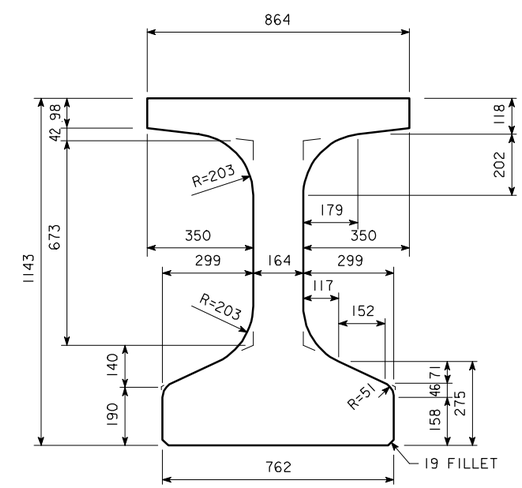

BTCM BEAM CROSS SECTION

BTC28M BEAM DETAILS

IOWA DEPARTMENT OF TRANSPORTATION - HIGHWAY DIVISION

DESIGN SHEET NO. ____ OF ____ FILE NO. _____ DESIGN NO. _____

DESIGN TEAM	BULB TEE "C" BEAM - 28 950 mm SPAN	STANDARD SHEET M4714	COUNTY	PROJECT NUMBER	SHEET NUMBER

REVISED 2-05 - BEAM LENGTHENED TO ACCOMMODATE 200 mm END BEARING LOCATION.
HMBT4714.S01 - THIS SHEET ISSUED 05-04.

10-FEB-2006 14:08 ajeffer W:\Projects\0000006002\BRFinal\MetricBeams.dgn mbtc4714

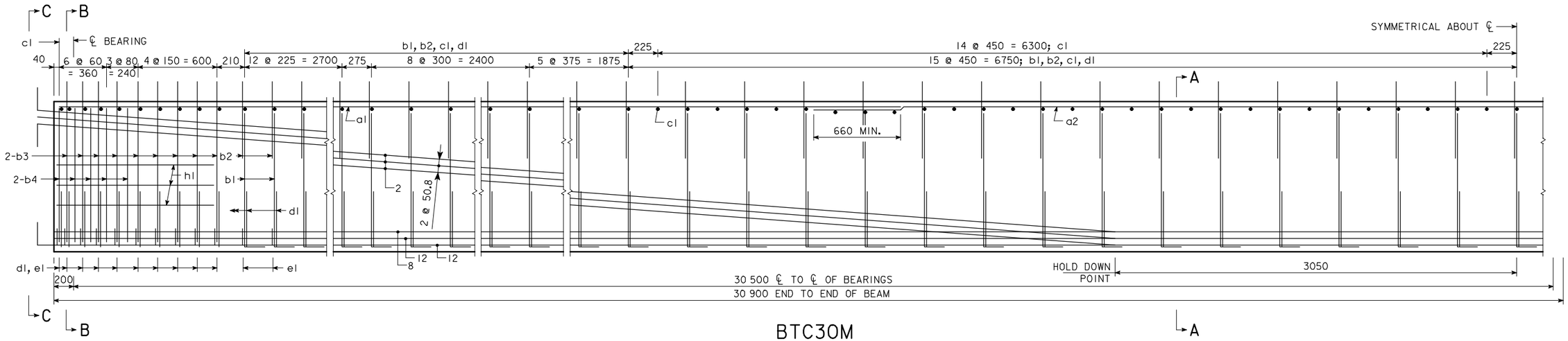

BTC30M

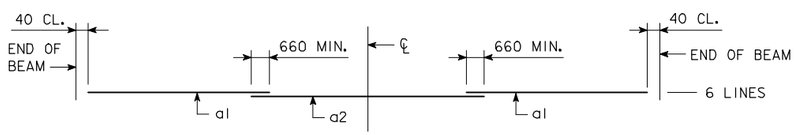

TOP FLANGE LONGITUDINAL BAR LAYOUT

AREA = 446 358 mm²
$\bar{y}_b$ = 527 mm
$\bar{I}$ = 74 493 350 000 mm⁴

BEAM SECTION PROPERTIES

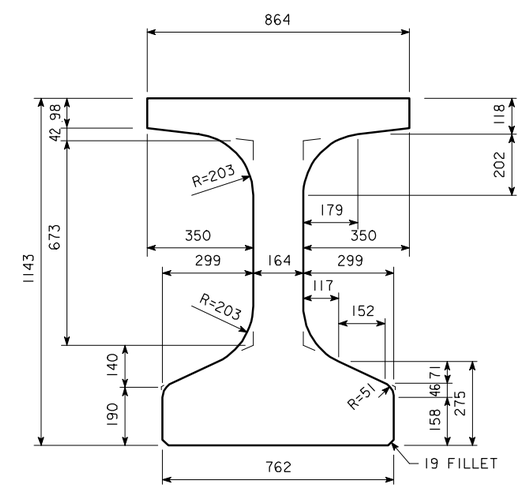

BTCM BEAM CROSS SECTION

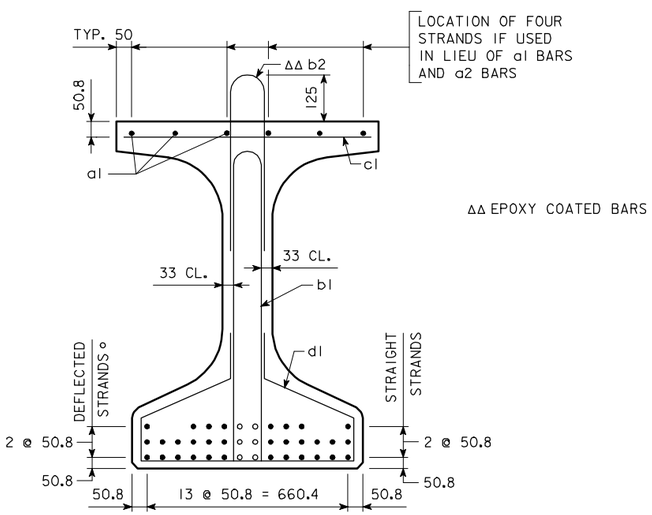

SECTION A-A

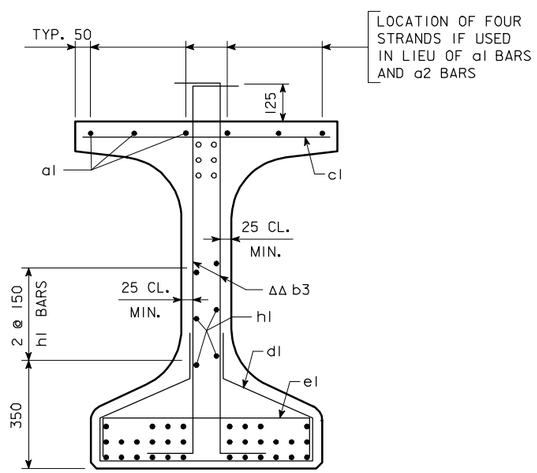

SECTION B-B

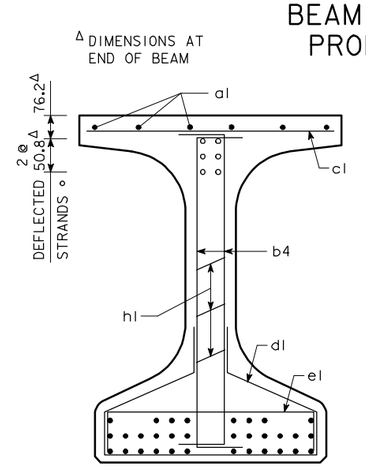

SECTION C-C

BTC30M BEAM DETAILS

IOWA DEPARTMENT OF TRANSPORTATION - HIGHWAY DIVISION

DESIGN SHEET NO. ____ OF ____ FILE NO. _____ DESIGN NO. _____

REVISED 2-05 - BEAM LENGTHENED TO ACCOMMODATE 200 mm END BEARING LOCATION.
HMBT4715.S01 - THIS SHEET ISSUED 05-04.

DESIGN TEAM	BULB TEE "C" BEAM - 30 500 mm SPAN	STANDARD SHEET M4715	COUNTY	PROJECT NUMBER	SHEET NUMBER

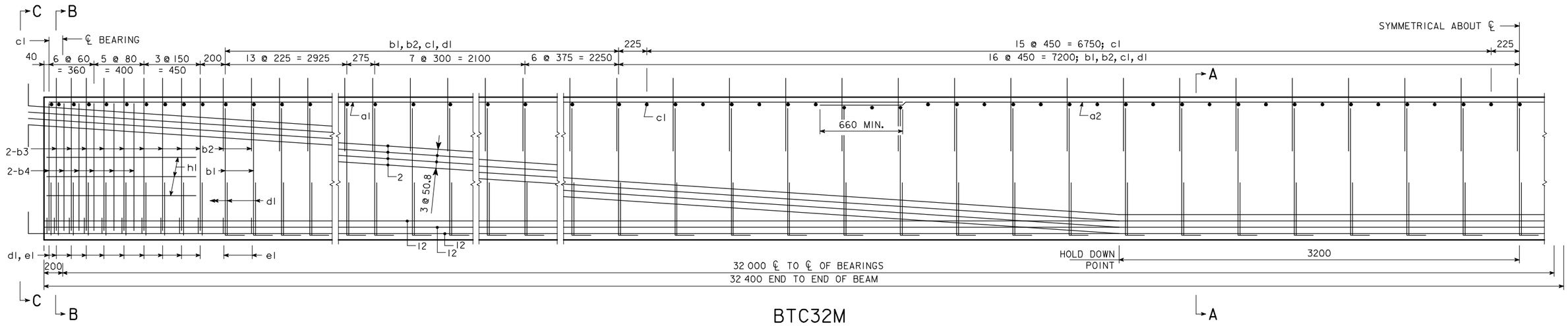

BTC32M

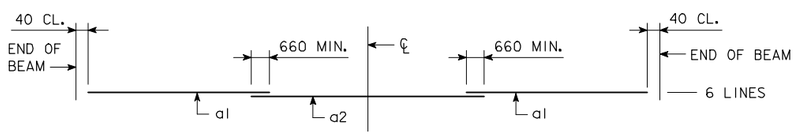

TOP FLANGE LONGITUDINAL BAR LAYOUT

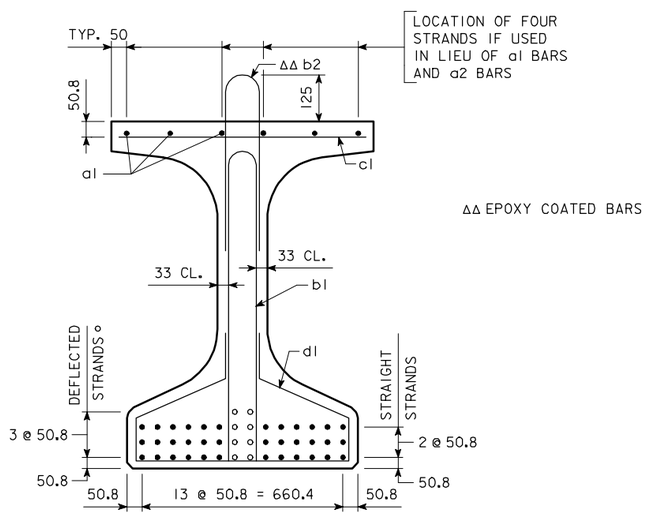

SECTION A-A

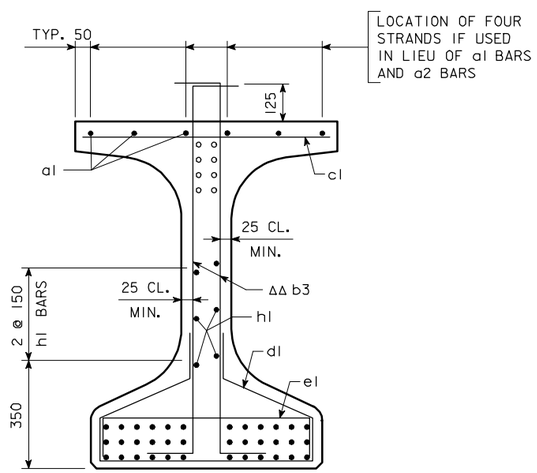

SECTION B-B

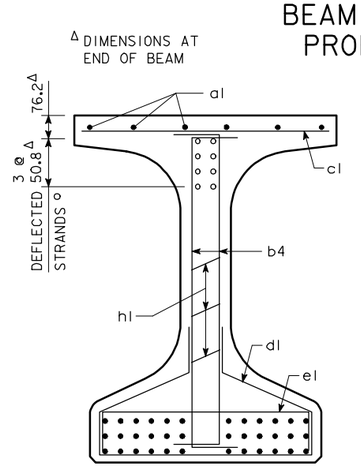

SECTION C-C

AREA = 446 358 mm²
$\bar{y}_b$ = 527 mm
$\bar{I}$ = 74 493 350 000 mm⁴

BEAM SECTION PROPERTIES

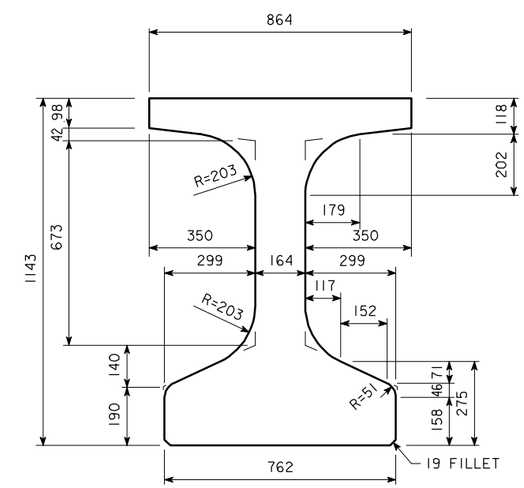

BTCM BEAM CROSS SECTION

BTC32M BEAM DETAILS

IOWA DEPARTMENT OF TRANSPORTATION - HIGHWAY DIVISION

DESIGN SHEET NO. ____ OF ____ FILE NO. _____ DESIGN NO. _____

DESIGN TEAM	BULB TEE "C" BEAM - 32 000 mm SPAN	STANDARD SHEET M4716	COUNTY	PROJECT NUMBER	SHEET NUMBER

REVISED 2-05 - BEAM LENGTHENED TO ACCOMMODATE 200 mm END BEARING LOCATION.
HMBT4716.S01 - THIS SHEET ISSUED 05-04.

10-FEB-2006 14:09 ajeffer W:\Projects\0000006002\BRFinal\MetricBeams.dgn mbtc4716

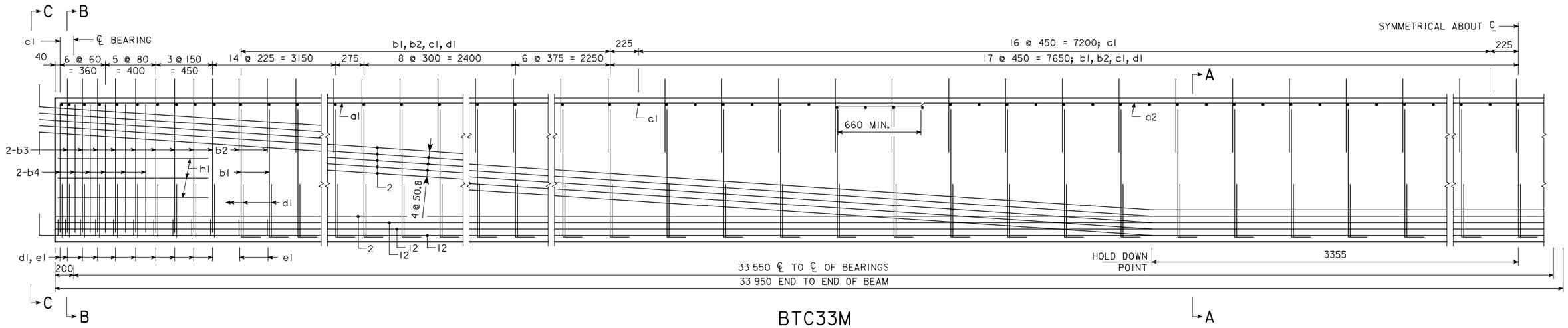

BTC33M

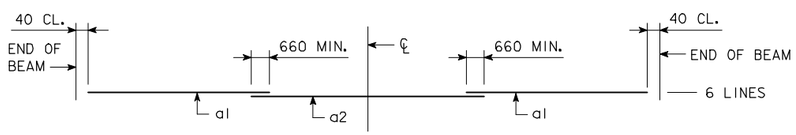

TOP FLANGE LONGITUDINAL BAR LAYOUT

AREA = 446 358 mm²
$\bar{y}_b$ = 527 mm
I = 74 493 350 000 mm⁴

BEAM SECTION PROPERTIES

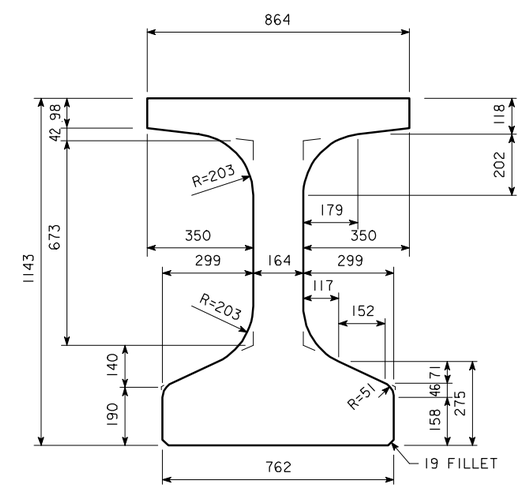

BTCM BEAM CROSS SECTION

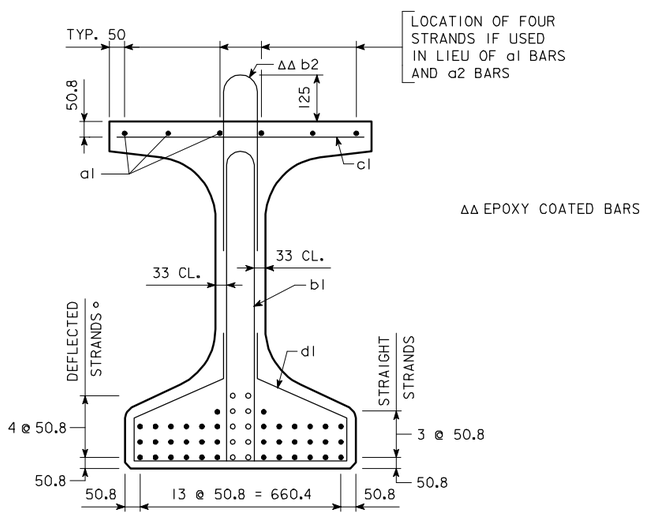

SECTION A-A

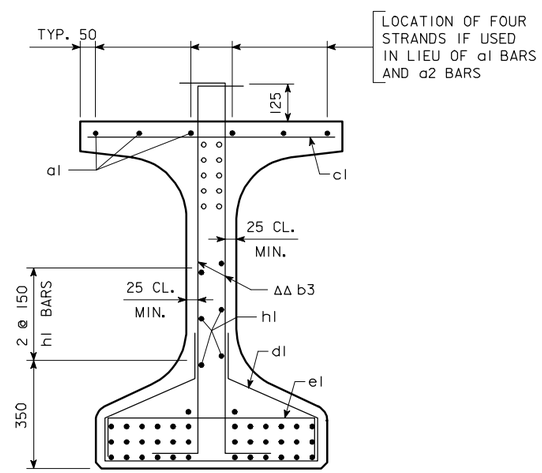

SECTION B-B

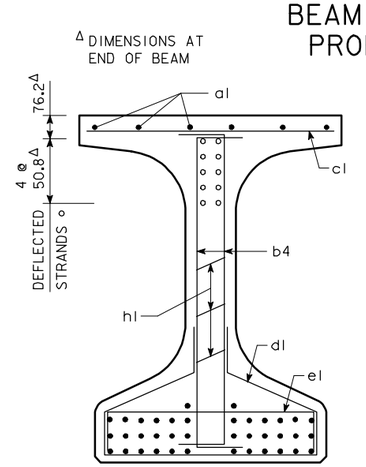

SECTION C-C

REVISED 2-05 - BEAM LENGTHENED TO ACCOMMODATE 200 mm END BEARING LOCATION.
HMBT4717.S01 - THIS SHEET ISSUED 05-04.

BTC33M BEAM DETAILS

IOWA DEPARTMENT OF TRANSPORTATION - HIGHWAY DIVISION

DESIGN SHEET NO. ____ OF ____ FILE NO. _____ DESIGN NO. _____

DESIGN TEAM	BULB TEE "C" BEAM - 33 550 mm SPAN	STANDARD SHEET M4717	COUNTY	PROJECT NUMBER	SHEET NUMBER

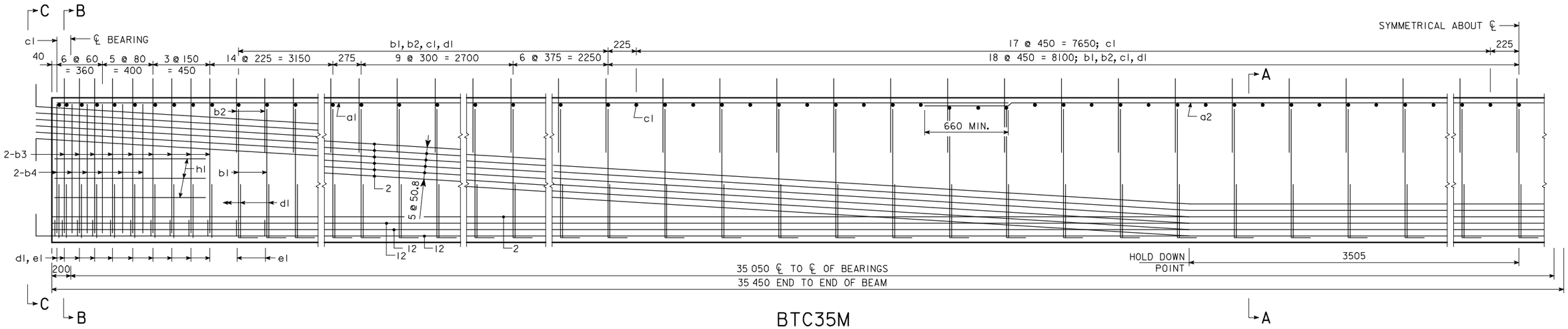

BTC35M

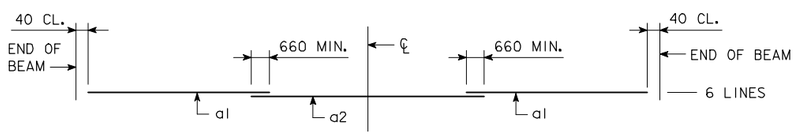

TOP FLANGE LONGITUDINAL BAR LAYOUT

AREA = 446 358 mm²
$\bar{y}_b$ = 527 mm
I = 74 493 350 000 mm⁴

BEAM SECTION PROPERTIES

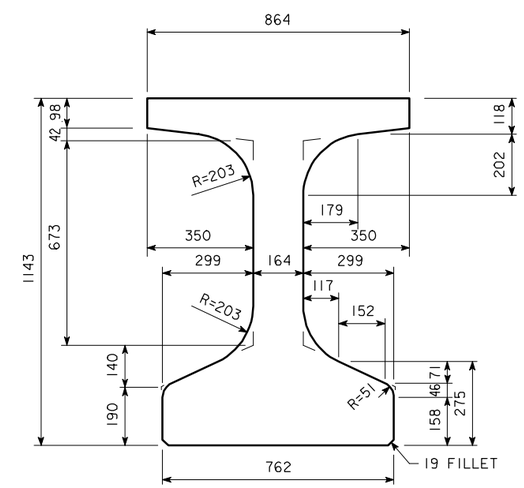

BTCM BEAM CROSS SECTION

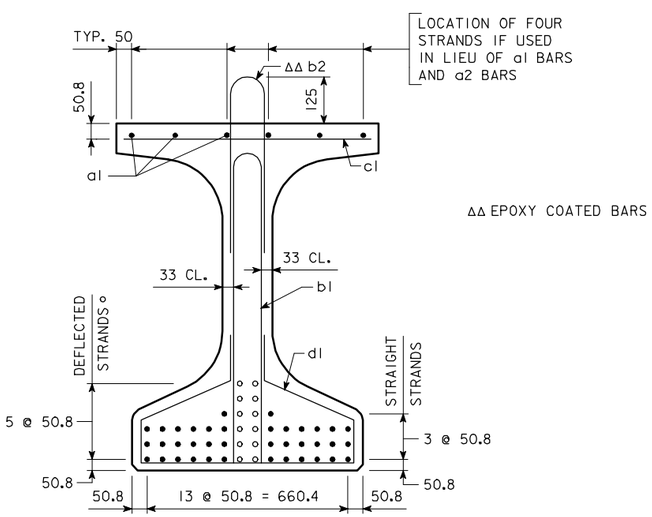

SECTION A-A

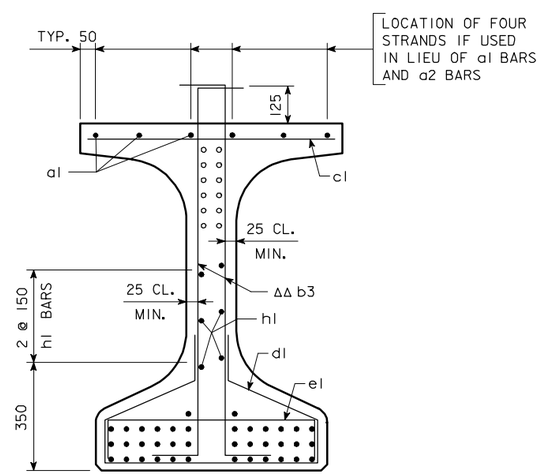

SECTION B-B

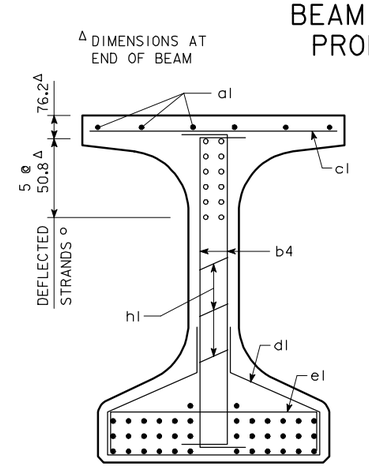

SECTION C-C

BTC35M BEAM DETAILS

IOWA DEPARTMENT OF TRANSPORTATION - HIGHWAY DIVISION

DESIGN SHEET NO. ____ OF ____ FILE NO. _____ DESIGN NO. _____

REVISED 2-05 - BEAM LENGTHENED TO ACCOMMODATE 200 mm END BEARING LOCATION.
HMBT4718.SOI - THIS SHEET ISSUED 05-04.

DESIGN TEAM	BULB TEE "C" BEAM - 35 050 mm SPAN	STANDARD SHEET M4718	COUNTY	PROJECT NUMBER	SHEET NUMBER

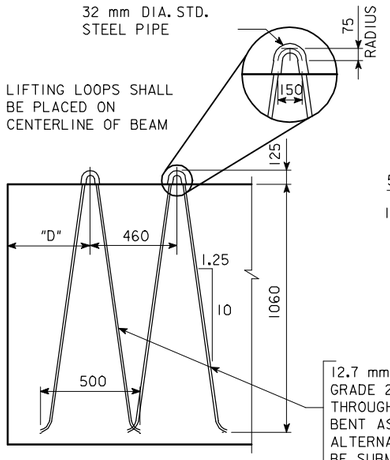

12.7 mm NOMINAL DIA.
GRADE 270 STRANDS THREADED
THROUGH EACH PIPE SLEEVE
BENT AS SHOWN AFTER THREADING.
ALTERNATE LIFTING DEVICES MAY
BE SUBMITTED FOR APPROVAL
(SEE LIFTING LOOP TABLE).

LIFTING LOOP DETAIL

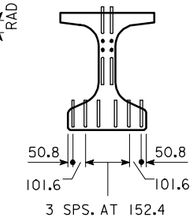

THE TOP AND BOTTOM ROWS OF THE DEFLECTED STRANDS ARE TO BE CUT WITH 460 mm PROJECTIONS WHICH ARE TO BE SHOP BENT AS SHOWN. THE REMAINING TOP DEFLECTED STRANDS ARE TO BE CUT WITH 175 mm PROJECTIONS.
SIX BOTTOM STRANDS ARE TO BE CUT WITH 460 mm PROJECTIONS WHICH ARE TO BE SHOP BENT AS SHOWN. THE REMAINING BOTTOM STRANDS ARE TO BE CUT OFF REASONABLY FLUSH WITH THE CONCRETE.

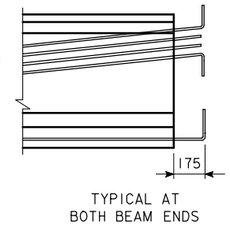

STRAND PROJECTION AT BEAM ENDS WHEN EMBEDDED IN CONCRETE END DIAPHRAGMS

BTC36M BEAM DATA

	BTC BEAM	SPAN LENGTH ℄-℄ BEARING	OVERALL BEAM LENGTH (mm)	CONCRETE STRENGTH f'ci (MPa)	CONCRETE STRENGTH f'c (MPa)	STRAND SIZE DIA. (mm)	NO. OF STRAND STRAIGHT	NO. OF STRAND DEFLECTED	TOTAL INITIAL PRESTRESS ③ kN	HOLD DOWN FORCE-kN	CAMBER (mm) AT RELEASE	CAMBER (mm) AFTER LOSSES	DEFLECTION (mm) Δ_D ② IMMEDIATE ① (ELASTIC) Δ_I STEEL DIAPHRAGM	DEFLECTION (mm) Δ_D ② TIME (PLASTIC) Δ_T STEEL DIAPHRAGM	PERMISSIBLE MAXIMUM SPACING HL-93 LOADING STEEL DIAPHRAGM	MASS (kg)	CONCRETE (m^3)	REINFORCING STEEL (MASS-kg)
④	BTC36M	36 600	37 000	55.2	62.1	15.2	38	12	9461	135	102	178	86	22	2210	39 660	16.5	1472

① DEFLECTIONS AT MID-SPAN DUE TO WEIGHT OF SLAB AND DIAPHRAGM. THE DEFLECTIONS SHOWN ARE FOR A SLAB (200 mm) AND HAUNCH (40 mm) WEIGHT OF:

11.22 kN/m FOR 2210 mm BEAM SPACING

AND ONE STEEL DIAPHRAGM (2.22 kN) AT ℄ OF SPAN.
FOR DIFFERENT SLAB AND DIAPHRAGM WEIGHTS, DEFLECTIONS WILL BE DIRECTLY PROPORTIONAL.

② DEFLECTIONS DUE TO THE COMBINED EFFECT OF CREEP DUE TO WEIGHT OF SLAB AND SHRINKAGE OF SLAB.
TOTAL BEAM DEFLECTIONS AT ℄ OF SPAN, Δ_D, DUE TO WEIGHT OF SLAB AND DIAPHRAGMS FOR DETAILING PURPOSE:
(A) $\Delta_D = \Delta_I + \Delta_T$ FOR SIMPLE SPAN.
(B) $\Delta_D = \Delta_I + \frac{3}{4}\Delta_T$ FOR END SPANS OF CONTINUOUS BRIDGE.
(C) $\Delta_D = \Delta_I + \frac{1}{2}\Delta_T$ FOR INTERIOR SPANS OF CONTINUOUS BRIDGE.

③ TOTAL INITIAL PRESTRESS IS BASED ON 72.6% f's, f's. = 1860 MPa AND As = 140.0 mm^2.

④ REQUIRES 27.5 MPa COMPRESSIVE STRENGTH FOR CAST-IN-PLACE SLAB CONCRETE.

BEAM NOTES:

THIS BEAM IS DESIGNED FOR AASHTO LIVE LOADS AS INDICATED IN ABOVE TABLE WITH AN ALLOWANCE OF 960 N PER SQUARE METER OF ROADWAY FOR FUTURE WEARING SURFACE.

HOLD DOWN POINTS FOR DEFLECTED STRANDS MAY BE MOVED TOWARD ENDS OF BEAM A DISTANCE OF 0.05 L MAXIMUM AT PRODUCER'S OPTION.

ALL PRESTRESSING STRANDS EXCEPT LIFTING LOOP STRANDS SHALL BE 15.2 mm NOMINAL DIAMETER (NOMINAL STEEL AREA = 140.0 mm^2) AND CONFORM TO ASTM A416 GRADE 270 LOW RELAXATION STRANDS. MINIMUM STRAND BREAKING STRENGTH SHALL BE 260.7 kN.

TOPS OF BEAMS ARE TO BE STRUCK OFF LEVEL AND INTENTIONALLY ROUGHENED TRANSVERSELY TO A FULL AMPLITUDE OF APPROXIMATELY 6 mm EXCEPT A 50 mm WIDE FINISH SHALL BE PROVIDED ON THE TOP EDGE ON ONE SIDE ONLY OF THE BEAM.

BEARINGS SHALL BE AS DETAILED ON OTHER DESIGN SHEETS.

BEAM TO BE USED IN BRIDGES MADE CONTINUOUS BY THE POURED IN PLACE FLOOR, ARE TO BE AT LEAST 28 DAYS OLD BEFORE THE FLOOR IS PLACED UNLESS A SHORTER CURING TIME IS APPROVED BY THE BRIDGE ENGINEER.

THE PORTIONS OF THE PRESTRESSED BEAMS THAT ARE TO BE EMBEDDED IN THE ABUTMENT AND PIER DIAPHRAGMS SHALL BE ROUGHENED FOR A DISTANCE OF 250 mm FROM THE BEAM END BY SANDBLASTING OR OTHER APPROVED METHODS TO PROVIDE SUITABLE BOND BETWEEN THE BEAM AND THE DIAPHRAGM IN ACCORDANCE WITH ARTICLE 2403.14 OF THE SPECIFICATIONS.

UNLESS OTHERWISE NOTED THE BEAM IS TO BE INCREASED IN LENGTH BY .0005L TO COMPENSATE FOR ELASTIC SHORTENING, CREEP AND SHRINKAGE.

FOR TRANSPORTING, THE ALLOWABLE OVERHANG IS SHOWN IN THE LIFTING LOOP TABLE.

THE CONTRACTOR SHALL ASSURE THE LATERAL STABILITY OF THE BEAM DURING HANDLING, TRANSPORTING AND ERECTION BY PROVIDING TEMPORARY BRACING AS NEEDED.

ALL DIMENSIONS ARE IN MILLIMETERS (mm) UNLESS OTHERWISE NOTED OR SHOWN.

HOLES MUST BE CAST IN THE WEB TO ACCOMMODATE THE STEEL DIAPHRAGM ATTACHMENTS AS DETAILED ON THE STEEL DIAPHRAGM DETAIL SHEET.

IF SOLE PLATE IS REQUIRED FOR BEARING, SOLE PLATE IS TO BE SET IN FORMS WHEN BEAM IS CAST AND FORMED OUT BELOW TO EXCLUDE CONCRETE AS DETAILED ON THE BEARING SHEET.

IF STUB ABUTMENTS ARE USED, ALL STRANDS AT THE END OF BEAM AT STUB ABUTMENTS SHALL BE CUT OFF REASONABLY FLUSH WITH THE CONCRETE.

MINIMUM CONCRETE f'c (AT 28 DAYS) AND MINIMUM f'ci AT RELEASE ARE LOCATED IN THE BTC36M BEAM DATA TABLE ABOVE.

FOUR 15.2 mm DIAMETER STRANDS STRESSED TO NOT MORE THAN 20 kN EACH MAY BE USED IN LIEU OF BARS a1 AND a2 IN THE TOP FLANGE.

WHEN EXPANSION JOINTS ARE USED, CONCRETE SEALER SHALL BE APPLIED TO THE PRESTRESSED BEAM END SECTIONS. THE SEALING SHALL BE IN ACCORDANCE WITH MATERIALS I.M. 570 AND 491.12.

IF THE PRECAST PANEL OPTION IS ALLOWED AND USED FOR BRIDGE DECK FORMATION, THE BEAM STIRRUPS WILL NEED TO BE EXTENDED AND TOP FLANGE BEAM FINISH SHALL BE MODIFIED AS PER DETAILS ON THE PRECAST DECK PANEL SHEET.

LIFTING LOOP TABLE

BEAM	LIFTING LOOPS EACH END	# OF STRANDS PER LOOP	D	BEAM OVERHANG
BTC36M	2	4	2515	4265

LIFTING LOOPS SHALL CARRY LOADS EQUALLY.

NUMBER AND EXACT LOCATION OF COIL TIES TO BE AS DETAILED ON SPECIFIC BRIDGE DESIGN.

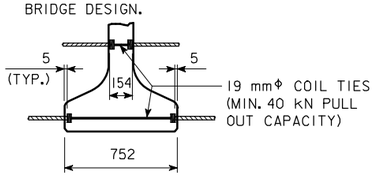

COIL TIE DETAIL

DESIGN STRESSES:

DESIGN STRESSES FOR THE FOLLOWING MATERIALS ARE TO BE IN ACCORDANCE WITH AASHTO LRFD BRIDGE DESIGN SPECIFICATIONS FOR HIGHWAY BRIDGES, SERIES OF 1998.
REINFORCING STEEL IN ACCORDANCE WITH SECTION 5, GRADE 400.
CONCRETE IN ACCORDANCE WITH SECTION 5.
PRESTRESSING STEEL IN ACCORDANCE WITH SECTION 5, GRADE 270.

SPECIFICATIONS:

CONSTRUCTION: STANDARD SPECIFICATIONS OF THE IOWA DEPARTMENT OF TRANSPORTATION, CURRENT SERIES, WITH CURRENT APPLICABLE SPECIAL PROVISIONS AND SUPPLEMENTAL SPECIFICATIONS.

DESIGN: AASHTO LRFD, SERIES OF 1998, WITH MINOR MODIFICATIONS.

ΔΔ b2 AND b3 BARS TO BE EPOXY COATED
* b3 AND b4 BARS TO BE USED IN PAIRS

REINFORCING BAR LIST

	BEAM BAR	SIZE	SHAPE	BTC36M NO.	LENGTH
	a1	16		12	12 980
	a2	16		6	12 190
	b1	16		99	2380
ΔΔ	b2	16		99	1200
ΔΔ *	b3	19		36	1510
*	b4	19		24	1320
	c1	13		157	780
	d1	13		119	1930
	e1	13		24	950
	h1	13		6	2420

BENT BAR DETAILS

NOTE: ALL BAR DIMENSIONS ARE OUT TO OUT
D = PIN DIAMETER FOR BENDING
(UNLESS OTHERWISE SHOWN)
#13 BAR D= 50
#16 BAR D= 65
#19 BAR D= 115

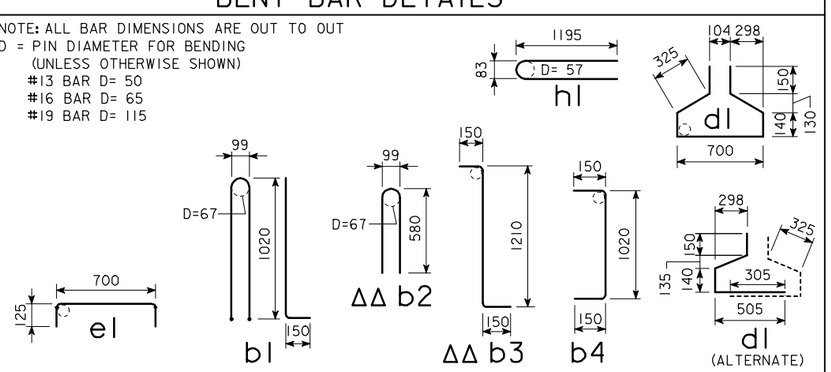

BTC36M BEAM DETAILS

IOWA DEPARTMENT OF TRANSPORTATION - HIGHWAY DIVISION
DESIGN SHEET NO. ____ OF ____ FILE NO. _____ DESIGN NO. _____

REVISED 2-05 - BEAM LENGTHENED TO ACCOMMODATE 200 mm END BEARING LOCATION. MASS AND CONCRETE QUANTITIES ADJUSTED.
HMBT4700.S01 - THIS SHEET ISSUED 05-04.

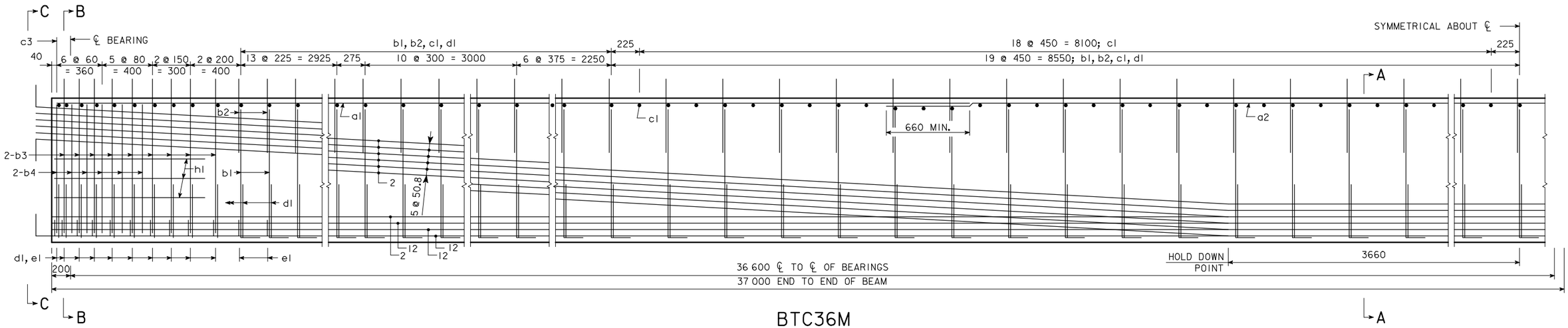

BTC36M

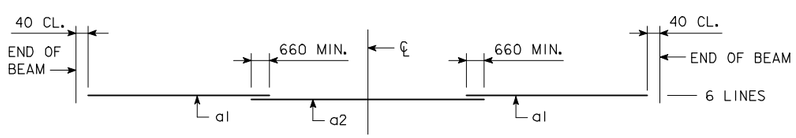

TOP FLANGE LONGITUDINAL BAR LAYOUT

AREA = 446 358 mm²
$\bar{y}_b$ = 527 mm
I = 74 493 350 000 mm⁴

BEAM SECTION PROPERTIES

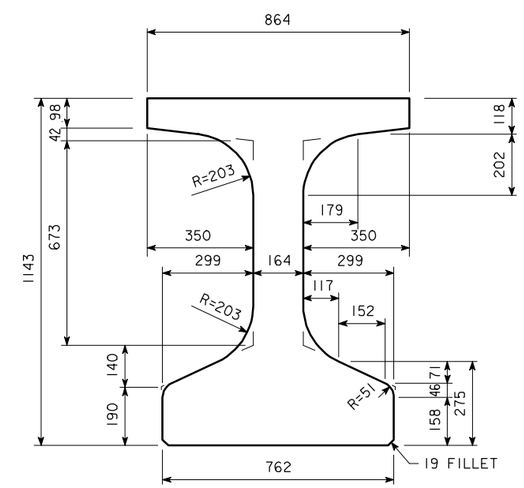

BTCM BEAM CROSS SECTION

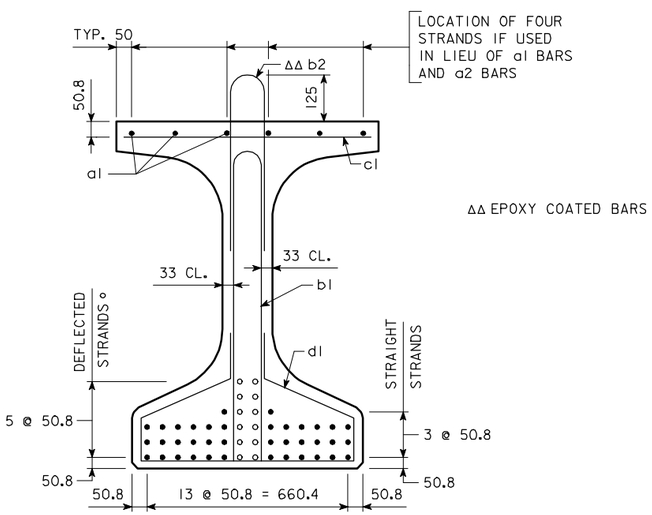

SECTION A-A

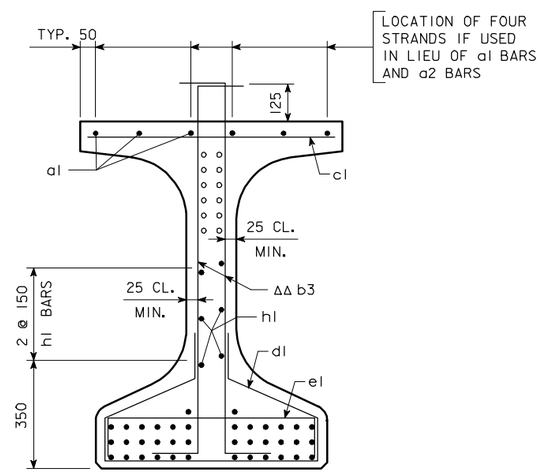

SECTION B-B

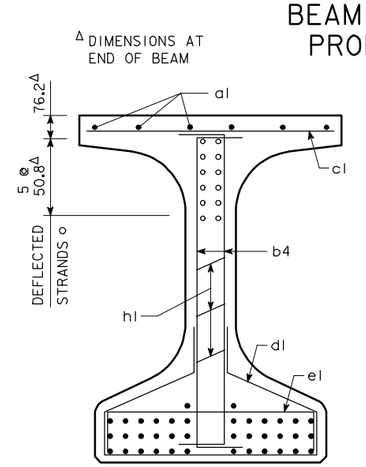

SECTION C-C

BTC36M BEAM DETAILS

IOWA DEPARTMENT OF TRANSPORTATION - HIGHWAY DIVISION

DESIGN SHEET NO. ____ OF ____ FILE NO. _____ DESIGN NO. _____

REVISED 2-05 - BEAM LENGTHENED TO ACCOMMODATE 200 mm END BEARING LOCATION.
HMBT4719.S02 - THIS SHEET ISSUED 05-04.

DESIGN TEAM	BULB TEE "C" BEAM - 36 600 mm SPAN (2 OF 2)	STANDARD SHEET M4719	COUNTY	PROJECT NUMBER	SHEET NUMBER

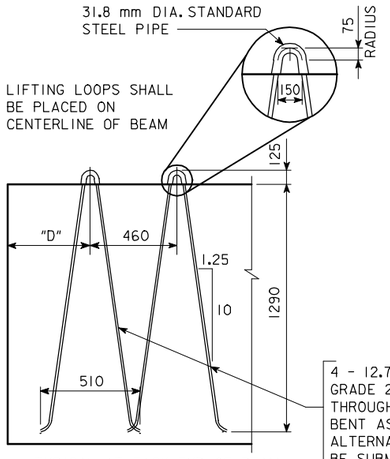

TYPICAL AT EACH END OF BEAM

LIFTING LOOP DETAIL

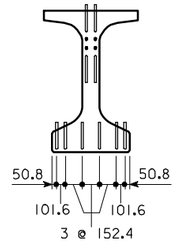

THE TOP AND BOTTOM ROWS OF THE DEFLECTED STRANDS ARE TO BE CUT WITH 460 mm PROJECTIONS WHICH ARE TO BE SHOP BENT AS SHOWN. THE REMAINING TOP DEFLECTED STRANDS ARE TO BE CUT WITH 175 mm PROJECTIONS.
SIX BOTTOM STRANDS ARE TO BE CUT WITH 460 mm PROJECTIONS WHICH ARE TO BE SHOP BENT AS SHOWN. THE REMAINING BOTTOM STRANDS ARE TO BE CUT OFF REASONABLY FLUSH WITH THE CONCRETE.

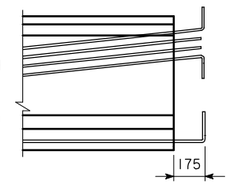

TYPICAL AT BOTH BEAM ENDS

STRAND PROJECTION AT BEAM ENDS WHEN EMBEDDED IN CONCRETE END DIAPHRAGMS

DESIGN STRESSES:

DESIGN STRESSES FOR THE FOLLOWING MATERIALS ARE TO BE IN ACCORDANCE WITH AASHTO LRFD BRIDGE DESIGN SPECIFICATIONS FOR HIGHWAY BRIDGES, SERIES OF 1998.
REINFORCING STEEL IN ACCORDANCE WITH SECTION 5, GRADE 400.
CONCRETE IN ACCORDANCE WITH SECTION 5.
PRESTRESSING STEEL IN ACCORDANCE WITH SECTION 5, GRADE 270.

SPECIFICATIONS:

CONSTRUCTION: STANDARD SPECIFICATIONS OF THE IOWA DEPARTMENT OF TRANSPORTATION, CURRENT SERIES, WITH CURRENT APPLICABLE SPECIAL PROVISIONS AND SUPPLEMENTAL SPECIFICATIONS.

DESIGN: AASHTO LRFD, SERIES OF 1998, WITH MINOR MODIFICATIONS.

BTDM BEAM DATA

	BTD BEAM	SPAN LENGTH ℄-℄ BEARING	OVERALL BEAM LENGTH (mm)	CONCRETE STRENGTH f'ci (MPa)	CONCRETE STRENGTH f'c (MPa)	STRAND SIZE DIA. (mm)	NO. OF STRAND STRAIGHT	NO. OF STRAND DEFLECTED	TOTAL INITIAL PRESTRESS ③ kN	HOLD DOWN FORCE-kN	CAMBER (mm) AT RELEASE	CAMBER (mm) AFTER LOSSES	DEFLECTION (mm) Δ_D ② IMMEDIATE ① (ELASTIC) Δ_I STEEL DIAPHRAGM	DEFLECTION (mm) Δ_D ② TIME (PLASTIC) Δ_T STEEL DIAPHRAGM	PERMISSIBLE MAXIMUM SPACING HL-93 LOADING STEEL DIAPHRAGM	MASS (kg)	CONCRETE (m^3)	REINFORCING STEEL (MASS-kg)
	BTD15M	15 250	15 650	31.0	34.5	15.2	10	—	1890	—	7	12	3	1	2820	18 140	7.6	744
	BTD16M	16 750	17 150	31.0	34.5	15.2	12	—	2268	—	9	17	4	1	2820	19 880	8.3	798
	BTD18M	18 300	18 700	31.0	34.5	15.2	10	2	2268	60	9	17	6	2	2820	21 680	9.0	873
	BTD19M	19 800	20 200	31.0	34.5	15.2	12	2	2651	56	13	23	8	2	2820	23 420	9.8	927
	BTD21M	21 350	21 750	31.0	34.5	15.2	14	2	3029	50	17	28	11	3	2820	25 220	10.5	964
	BTD22M	22 850	23 250	34.5	41.4	15.2	16	2	3407	47	18	34	13	3	2820	26 960	11.2	1018
	BTD24M	24 400	24 800	34.5	41.4	15.2	18	2	3785	44	23	41	17	4	2820	28 750	12.0	1079
	BTD25M	25 900	26 300	34.5	41.4	15.2	18	4	4164	80	28	50	22	6	2820	30 490	12.7	1133
	BTD27M	27 450	27 850	37.9	44.8	15.2	20	4	4542	79	33	57	27	7	2820	32 290	13.4	1233
	BTD28M	28 950	29 350	37.9	44.8	15.2	22	4	4920	74	38	67	33	8	2820	34 030	14.2	1286
	BTD30M	30 500	30 900	41.4	48.3	15.2	26	4	5676	71	47	84	39	10	2820	35 820	14.9	1340
	BTD32M	32 000	32 400	41.4	48.3	15.2	28	6	6432	97	57	100	47	12	2820	37 560	15.6	1412
	BTD33M	33 550	33 950	44.8	51.7	15.2	32	6	7193	93	66	116	55	14	2820	39 360	16.4	1496
	BTD35M	35 050	35 450	48.3	51.7	15.2	36	6	7953	90	73	129	65	16	2820	41 100	17.1	1574
	BTD36M	36 600	37 000	51.7	55.2	15.2	38	8	8710	108	83	146	75	19	2820	42 900	17.9	1647
④	BTD38M	38 100	38 500	55.2	58.6	15.2	42	12	10 218	141	97	170	87	22	2820	44 640	18.6	1737
④	BTD39M	39 600	40 000	55.2	62.0	15.2	42	14	10 605	150	100	176	96	24	2690	46 380	19.3	1791

① DEFLECTIONS AT MID-SPAN DUE TO WEIGHT OF SLAB AND DIAPHRAGM. THE DEFLECTIONS SHOWN ARE FOR A SLAB (200 mm) AND HAUNCH (40 mm) WEIGHT OF:
14.44 kN/m FOR 2820 mm BEAM SPACING
13.77 kN/m FOR 2690 mm BEAM SPACING
ONE STEEL DIAPHRAGM (2.22 kN) AT ℄ OF SPAN FOR BTD15M TO BTD36M. THREE STEEL DIAPHRAGMS (2.22 kN) AT $\frac{1}{4}$ POINTS OF SPAN FOR BTD38M TO BTD39M. FOR DIFFERENT SLAB AND DIAPHRAGM WEIGHTS, DEFLECTIONS WILL BE DIRECTLY PROPORTIONAL.
② DEFLECTIONS DUE TO THE COMBINED EFFECT OF CREEP DUE TO WEIGHT OF SLAB AND SHRINKAGE OF SLAB.
TOTAL BEAM DEFLECTIONS AT ℄ OF SPAN, Δ_D , DUE TO WEIGHT OF SLAB AND DIAPHRAGMS FOR DETAILING PURPOSE:
(A) $\Delta_D = \Delta_I + \Delta_T$ FOR SIMPLE SPAN.
(B) $\Delta_D = \Delta_I + \frac{3}{4}\Delta_T$ FOR END SPANS OF CONTINUOUS BRIDGE.
(C) $\Delta_D = \Delta_I + \frac{1}{2}\Delta_T$ FOR INTERIOR SPANS OF CONTINUOUS BRIDGE.
③ TOTAL INITIAL PRESTRESS IS BASED ON 72.6% f's, f's. = 1860 MPa AND As = 140.0 mm^2.
④ REQUIRES 27.6 MPa COMPRESSIVE STRENGTH FOR CAST-IN-PLACE SLAB CONCRETE.

BEAM NOTES:

THESE BEAMS ARE DESIGNED FOR AASHTO LIVE LOADS AS INDICATED IN ABOVE TABLE WITH AN ALLOWANCE OF 960 N PER SQUARE METER OF ROADWAY FOR FUTURE WEARING SURFACE.
HOLD DOWN POINTS FOR DEFLECTED STRANDS MAY BE MOVED TOWARD ENDS OF BEAM A DISTANCE OF 0.05 L MAXIMUM AT PRODUCER'S OPTION.
ALL PRESTRESSING STRANDS EXCEPT LIFTING LOOP STRANDS SHALL BE 15.2 mm NOMINAL DIAMETER (NOMINAL STEEL AREA = 140.0 mm^2) AND CONFORM TO ASTM A416 GRADE 270 LOW RELAXATION STRANDS. MINIMUM STRAND BREAKING STRENGTH SHALL BE 260.6 kN.
TOPS OF BEAMS ARE TO BE STRUCK OFF LEVEL AND INTENTIONALLY ROUGHENED TRANSVERSELY TO A FULL AMPLITUDE OF APPROXIMATELY 6 mm EXCEPT A 50 mm WIDE FINISH SHALL BE PROVIDED ON THE TOP EDGE ON ONE SIDE ONLY OF THE BEAM.
BEARINGS SHALL BE AS DETAILED ON OTHER DESIGN SHEETS.
BEAMS TO BE USED IN BRIDGES MADE CONTINUOUS BY THE POURED IN PLACE FLOOR, ARE TO BE AT LEAST 28 DAYS OLD BEFORE THE FLOOR IS PLACED UNLESS A SHORTER CURING TIME IS APPROVED BY THE BRIDGE ENGINEER.
THE PORTIONS OF THE PRESTRESSED BEAMS THAT ARE TO BE EMBEDDED IN THE ABUTMENT AND PIER DIAPHRAGMS SHALL BE ROUGHENED FOR A DISTANCE OF 250 mm FROM THE BEAM END BY SANDBLASTING OR OTHER APPROVED METHODS TO PROVIDE SUITABLE BOND BETWEEN THE BEAM AND THE DIAPHRAGM IN ACCORDANCE WITH ARTICLE 2403.14 OF THE SPECIFICATIONS.
UNLESS OTHERWISE NOTED ALL BEAMS ARE TO BE INCREASED IN LENGTH BY .0005L TO COMPENSATE FOR ELASTIC SHORTENING, CREEP AND SHRINKAGE.
FOR TRANSPORTING, THE ALLOWABLE OVERHANG IS SHOWN IN THE "LIFTING LOOP AND OVERHANG TABLE"
THE CONTRACTOR SHALL ASSURE THE LATERAL STABILITY OF THE BEAMS DURING HANDLING, TRANSPORTING AND ERECTION BY PROVIDING TEMPORARY BRACING AS NEEDED.
ALL DIMENSIONS ARE IN MILLIMETERS (mm) UNLESS OTHERWISE NOTED OR SHOWN.
HOLES MUST BE CAST IN THE WEB TO ACCOMMODATE THE STEEL DIAPHRAGM ATTACHMENTS AS DETAILED ON THE STEEL DIAPHRAGM DETAIL SHEET.
IF SOLE PLATE IS REQUIRED FOR BEARING, SOLE PLATE IS TO BE SET IN FORMS WHEN BEAM IS CAST AND FORMED OUT BELOW TO EXCLUDE CONCRETE AS DETAILED ON THE BEARING SHEET.

BEAM NOTES: (CONTINUED)

IF STUB ABUTMENTS ARE USED, ALL STRANDS AT THE ENDS OF BEAMS AT STUB ABUTMENTS SHALL BE CUT OFF REASONABLY FLUSH WITH THE CONCRETE.
MINIMUM CONCRETE f'c (AT 28 DAYS) AND MINIMUM f'ci AT RELEASE ARE LOCATED IN THE BTDM BEAM DATA TABLE ABOVE.
FOUR 15.2 mm DIAMETER STRANDS STRESSED TO NOT MORE THAN 20 kN EACH MAY BE USED IN LIEU OF BARS a1 AND a2 IN THE TOP FLANGE.
WHEN EXPANSION JOINTS ARE USED, CONCRETE SEALER SHALL BE APPLIED TO THE PRESTRESSED BEAM END SECTIONS. THE SEALING SHALL BE IN ACCORDANCE WITH MATERIALS I.M. 570 AND 491.12.
IF THE PRECAST PANEL OPTION IS ALLOWED AND USED FOR BRIDGE DECK FORMATION, THE BEAM STIRRUPS WILL NEED TO BE EXTENDED AND TOP FLANGE BEAM FINISH SHALL BE MODIFIED AS PER DETAILS ON THE PRECAST DECK PANEL SHEET.

LIFTING LOOP AND OVERHANG TABLE

BEAMS	LIFTING LOOPS EACH END	# OF STRANDS PER LOOP	D	BEAM OVERHANG
BTD15M - BTD24M	1	4	610	**
BTD25M - BTD27M	2	4	610	**
BTD28M	2	4	610	3350
BTD30M	2	4	1140	3050
BTD32M	2	4	1900	3660
BTD33M	2	4	2490	3660
BTD35M	2	4	2490	3660
BTD36M	2	4	2820	4260
BTD38M	2	4	2820	4870
BTD39M	2	4	2820	4870

** IN ACCORDANCE WITH STANDARD SPECIFICATIONS 2407.13.

LIFTING LOOPS SHALL CARRY LOADS EQUALLY.

NUMBER AND EXACT LOCATION OF COIL TIES TO BE AS DETAILED ON SPECIFIC BRIDGE DESIGN.

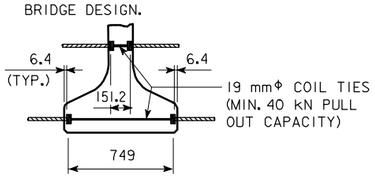

COIL TIE DETAIL

ΔΔ b2 AND b3 BARS TO BE EPOXY COATED
* b3 AND b4 BARS TO BE USED IN PAIRS

BENT BAR DETAILS

NOTE: ALL BAR DIMENSIONS ARE OUT TO OUT
D = PIN DIAMETER FOR BENDING (UNLESS OTHERWISE SHOWN)
#13 BAR D= 50
#16 BAR D= 65
#19 BAR D= 115

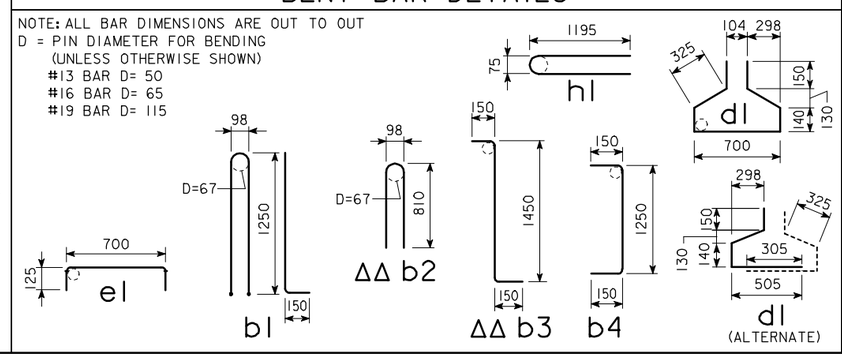

REINFORCING BAR LIST

	BEAM BAR	SIZE	SHAPE	BTD15M NO.	LENGTH	BTD16M NO.	LENGTH	BTD18M NO.	LENGTH	BTD19M NO.	LENGTH	BTD21M NO.	LENGTH	BTD22M NO.	LENGTH	BTD24M NO.	LENGTH	BTD25M NO.	LENGTH	BTD27M NO.	LENGTH	BTD28M NO.	LENGTH	BTD30M NO.	LENGTH	BTD32M NO.	LENGTH	BTD33M NO.	LENGTH	BTD35M NO.	LENGTH	BTD36M NO.	LENGTH	BTD38M NO.	LENGTH	BTD39M NO.	LENGTH	BEAM BAR	SIZE	
	a1	16	—	12	8120	12	8870	12	9640	12	10 390	12	11 170	12	11 920	12	6930	12	7680	12	8450	12	9200	12	9980	12	10 730	12	11 500	12	6490	12	7260	12	8010	12	8760	a1	16	
	a2	16	—	—	—	—	—	—	—	—	—	—	—	—	—	6	12 190	6	12 190	6	12 190	6	12 190	6	12 190	6	12 190	6	12 190	12	12 190	12	12 190	12	12 190	12	12 190	a2	16	
	b1	16		35	2830	39	2830	45	2830	49	2830	51	2830	55	2830	59	2830	63	2830	69	2830	73	2830	77	2830	83	2830	87	2830	93	2830	99	2830	105	2830	109	2830	b1	16	
ΔΔ	b2	16		35	1650	39	1650	45	1650	49	1650	51	1650	55	1650	59	1650	63	1650	69	1650	73	1650	77	1650	83	1650	87	1650	93	1650	99	1650	105	1650	109	1650	b2	16	ΔΔ
ΔΔ *	b3	19		32	1750	32	1750	32	1750	32	1750	32	1750	32	1750	32	1750	32	1750	32	1750	32	1750	32	1750	32	1750	36	1750	36	1750	36	1750	36	1750	36	1750	b3	19	ΔΔ *
*	b4	19		8	1550	8	1550	8	1550	8	1550	8	1550	8	1550	8	1550	8	1550	16	1550	16	1550	16	1550	16	1550	20	1550	20	1550	20	1550	24	1550	24	1550	b4	19	*
	c1	13	—	67	780	73	780	83	780	89	780	94	780	101	780	107	780	113	780	119	780	123	780	129	780	135	780	141	780	147	780	153	780	165	780	171	780	c1	13	
	d1	13		55	1930	59	1930	65	1930	69	1930	71	1930	75	1930	79	1930	83	1930	89	1930	93	1930	97	1930	103	1930	107	1930	113	1930	119	1930	125	1930	129	1930	d1	13	
	e1	13		26	950	26	950	26	950	26	950	26	950	26	950	26	950	26	950	26	950	26	950	26	950	26	950	26	950	26	950	26	950	26	950	26	950	e1	13	
	h1	13		6	2420	6	2420	6	2420	6	2420	6	2420	6	2420	6	2420	6	2420	6	2420	6	2420	6	2420	6	2420	6	2420	6	2420	6	2420	6	2420	6	2420	h1	13	

BTDM BEAM DETAILS

IOWA DEPARTMENT OF TRANSPORTATION - HIGHWAY DIVISION
DESIGN SHEET NO. ____ OF ____ FILE NO. _____ DESIGN NO. _____

HMBT4730.S01 - THIS SHEET ISSUED 05-04.

DESIGN TEAM	BULB TEE "D" BEAMS	STANDARD SHEET M4730	COUNTY	PROJECT NUMBER	SHEET NUMBER

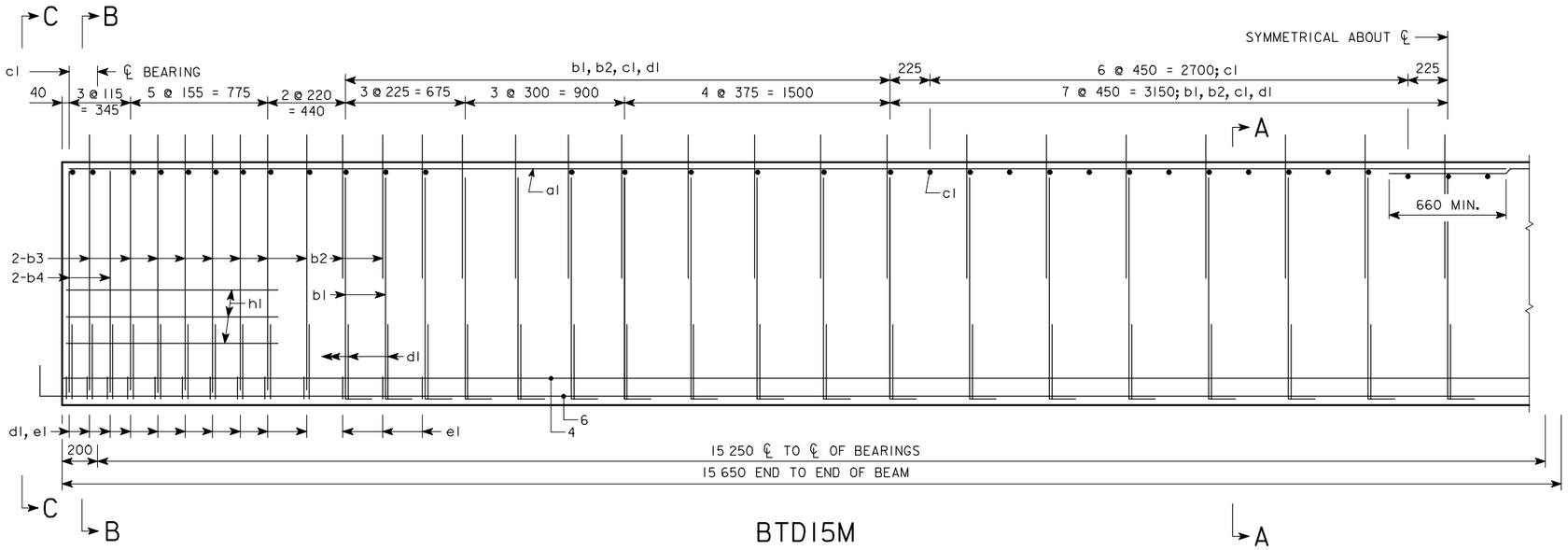

BTD15M

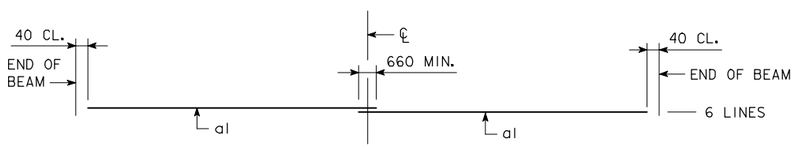

TOP FLANGE LONGITUDINAL BAR LAYOUT

AREA = 483 090 mm²
$\bar{y}_b$ = 626 mm
I = 118 984 000 000 mm⁴

BEAM SECTION PROPERTIES

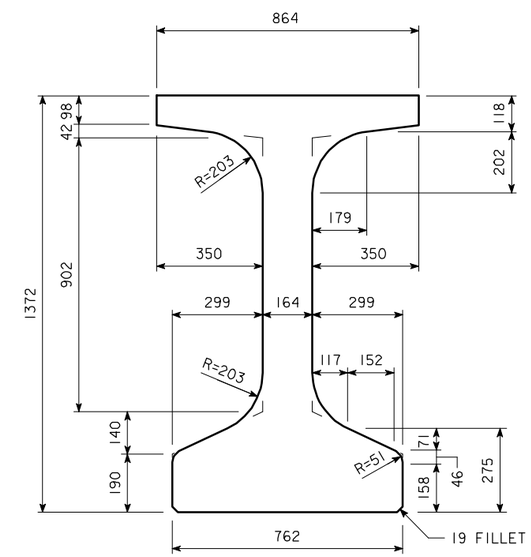

BTD BEAM CROSS SECTION

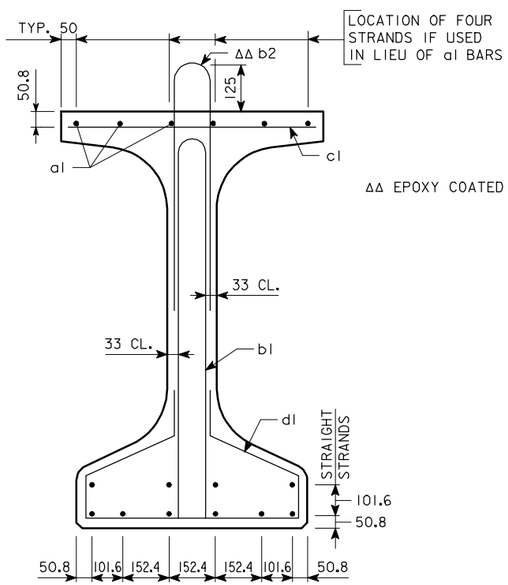

SECTION A-A

ΔΔ EPOXY COATED BARS

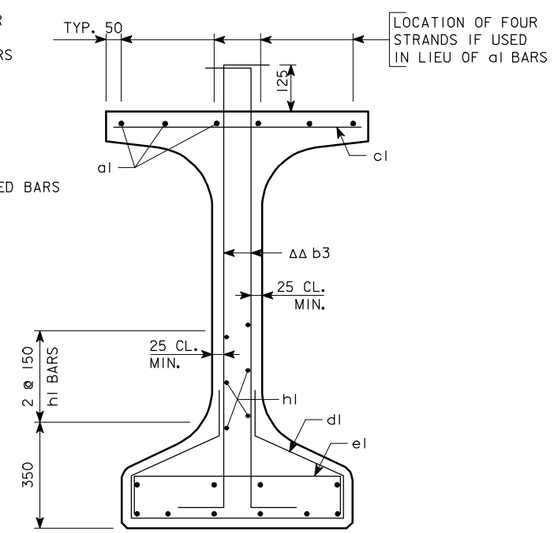

SECTION B-B

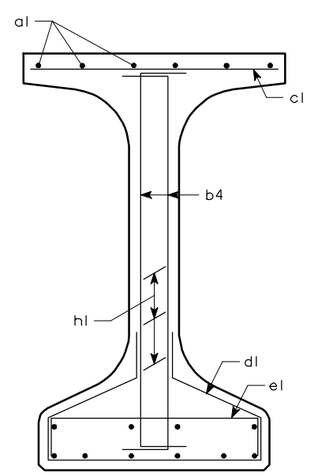

SECTION C-C

BTD15M BEAM DETAILS

IOWA DEPARTMENT OF TRANSPORTATION - HIGHWAY DIVISION

DESIGN SHEET NO. ____ OF ____ FILE NO. _____ DESIGN NO. _____

DESIGN TEAM	BULB TEE "D" BEAM - 15 250 mm SPAN	STANDARD SHEET M4731	COUNTY	PROJECT NUMBER	SHEET NUMBER

HMBT4731.S01 - THIS SHEET ISSUED 05-04.

10-FEB-2006 14:12 ajeffer W:\Projects\0000006002\BRFinal\MetricBeams.dgn mbtd4731

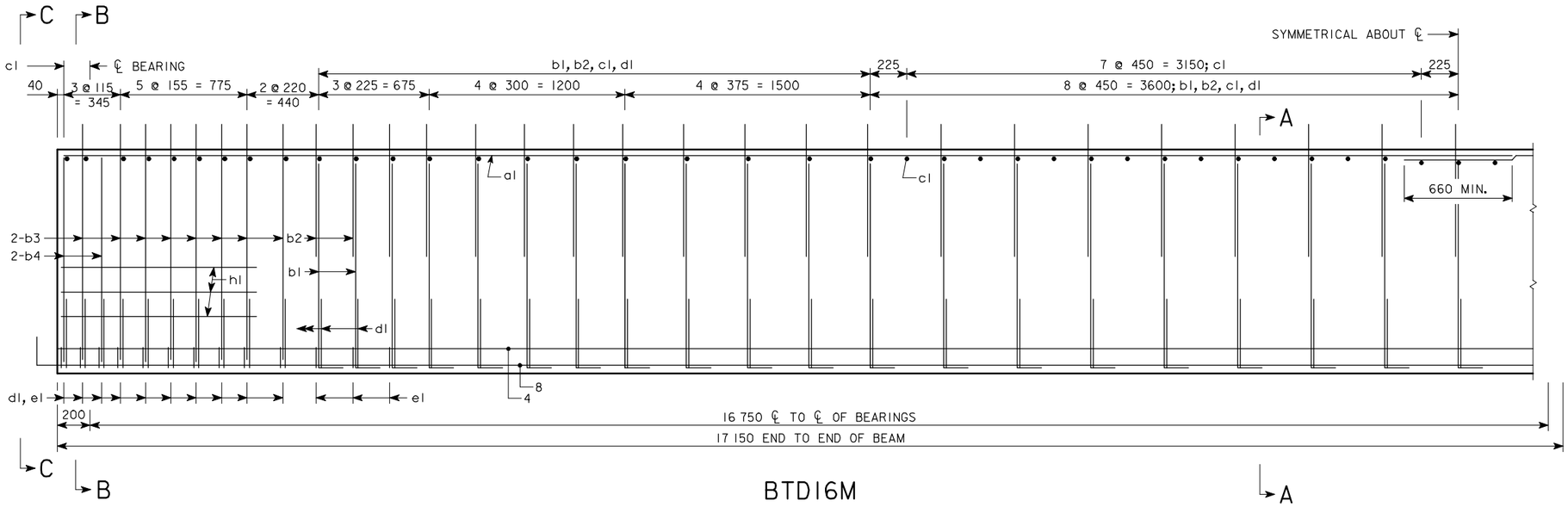

BTD16M

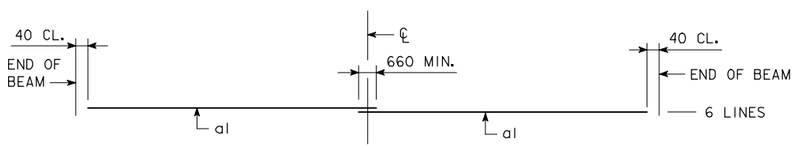

TOP FLANGE LONGITUDINAL BAR LAYOUT

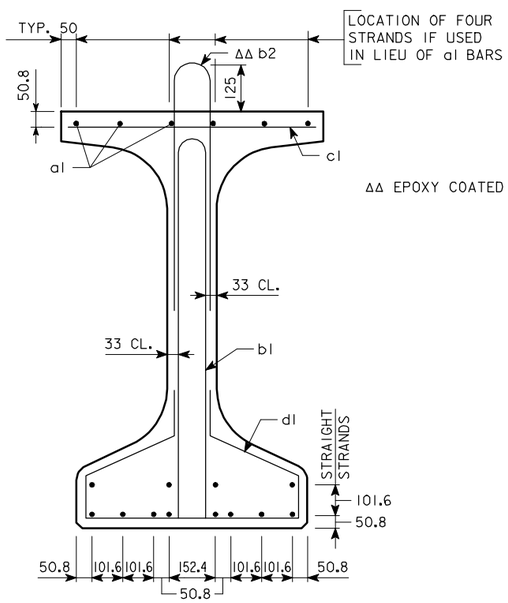

SECTION A-A

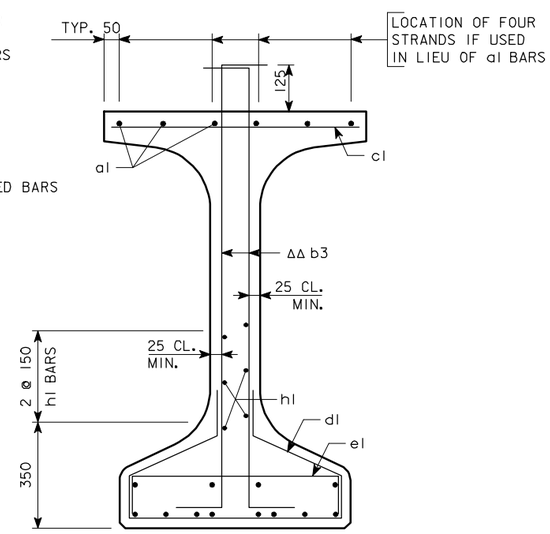

SECTION B-B

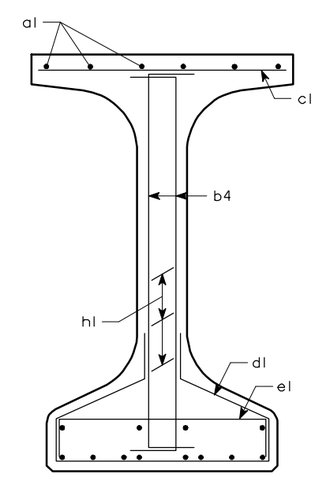

SECTION C-C

AREA = 483 090 mm²
$\bar{y}_b$ = 626 mm
I = 118 984 000 000 mm⁴

BEAM SECTION PROPERTIES

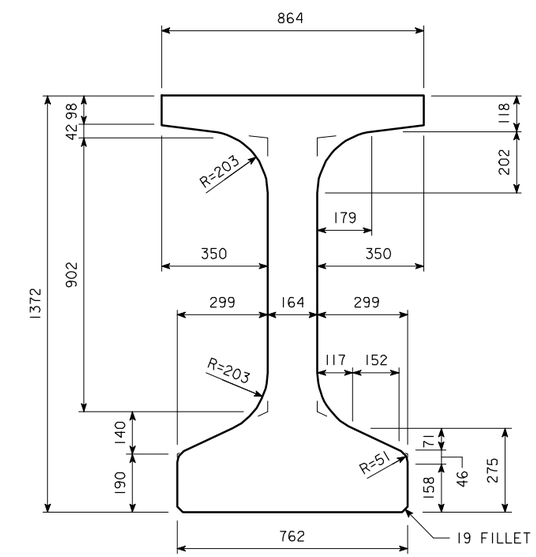

BTD BEAM CROSS SECTION

BTD16M BEAM DETAILS

IOWA DEPARTMENT OF TRANSPORTATION - HIGHWAY DIVISION

DESIGN SHEET NO. ____ OF ____ FILE NO. _____ DESIGN NO. _____

DESIGN TEAM	BULB TEE "D" BEAM - 16 750 mm SPAN	STANDARD SHEET M4732	COUNTY	PROJECT NUMBER	SHEET NUMBER

HMBT4732.S01 - THIS SHEET ISSUED 05-04.

10-FEB-2006 14:12 ajeffer W:\Projects\0000006002\BRFinal\MetricBeams.dgn mbtd4732

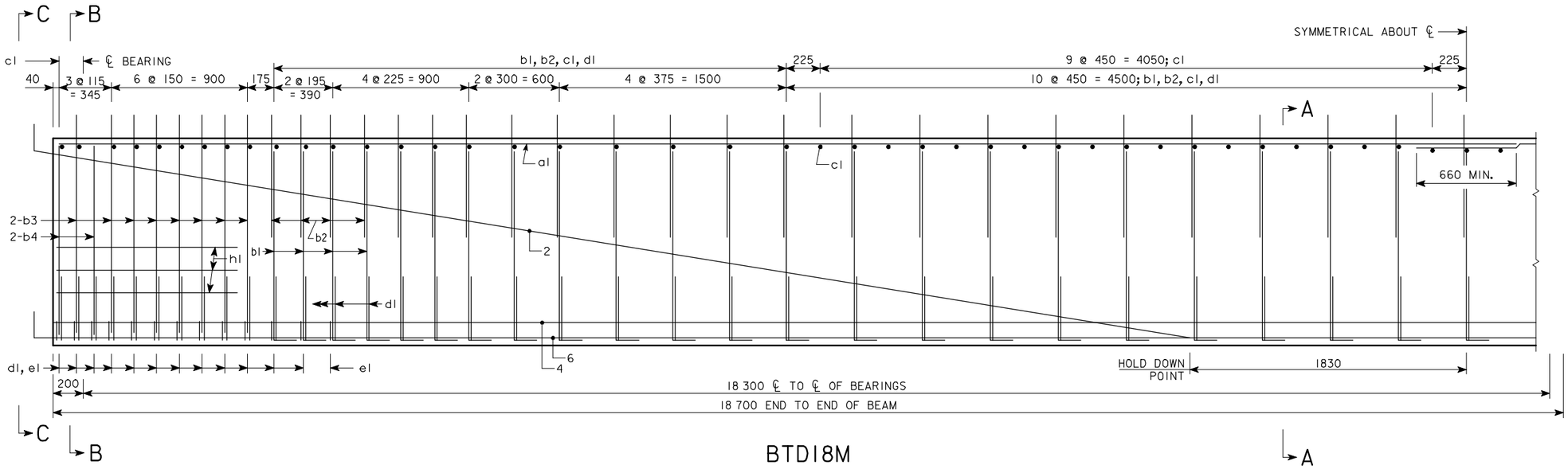

BTD18M

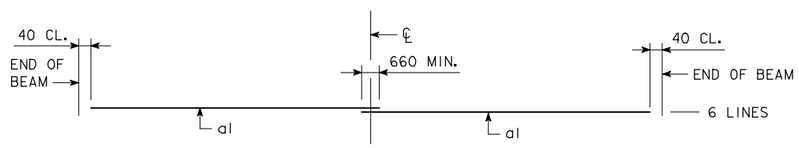

TOP FLANGE LONGITUDINAL BAR LAYOUT

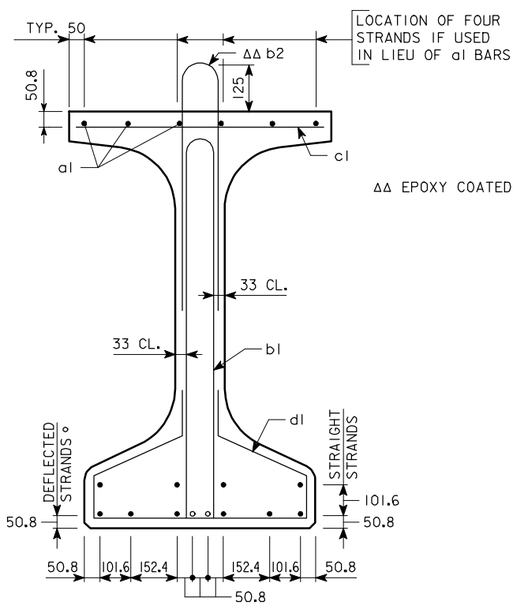

SECTION A-A

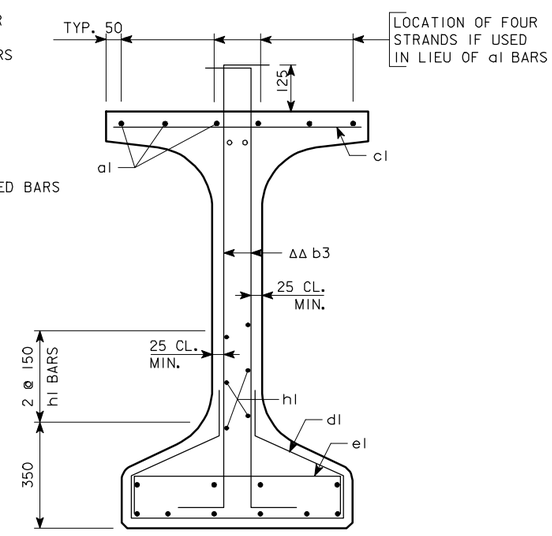

SECTION B-B

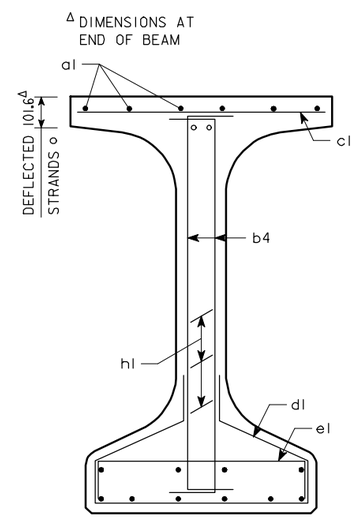

SECTION C-C

AREA = 483 090 mm²
$\bar{y}_b$ = 626 mm
I = 118 984 000 000 mm⁴

BEAM SECTION PROPERTIES

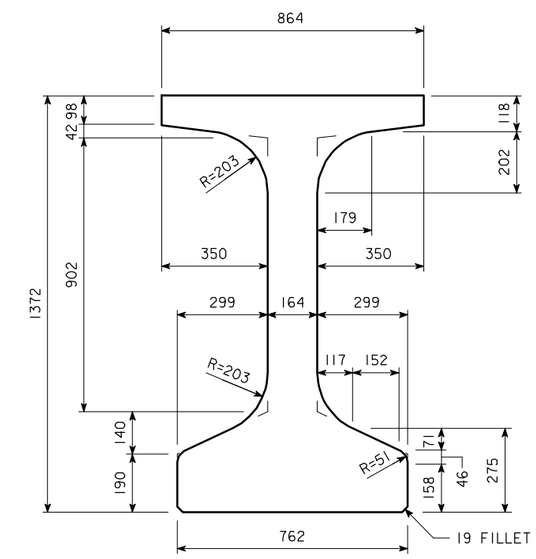

BTD BEAM CROSS SECTION

BTD18M BEAM DETAILS

IOWA DEPARTMENT OF TRANSPORTATION - HIGHWAY DIVISION

DESIGN SHEET NO. ____ OF ____ FILE NO. _____ DESIGN NO. _____

DESIGN TEAM	BULB TEE "D" BEAM - 18 300 mm SPAN	STANDARD SHEET M4733	COUNTY	PROJECT NUMBER	SHEET NUMBER

HMBT4733.S01 - THIS SHEET ISSUED 05-04.

10-FEB-2006 14:12 ajeffer W:\Projects\0000006002\BRFinal\MetricBeams.dgn mbtd4733

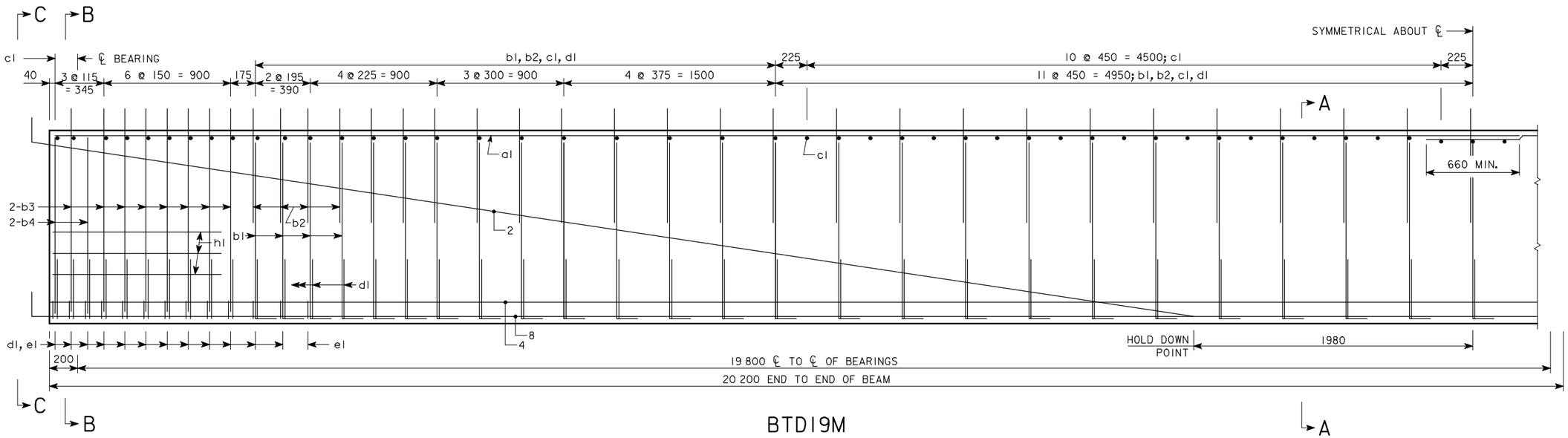

BTD19M

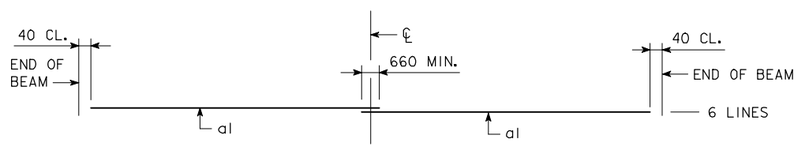

TOP FLANGE LONGITUDINAL BAR LAYOUT

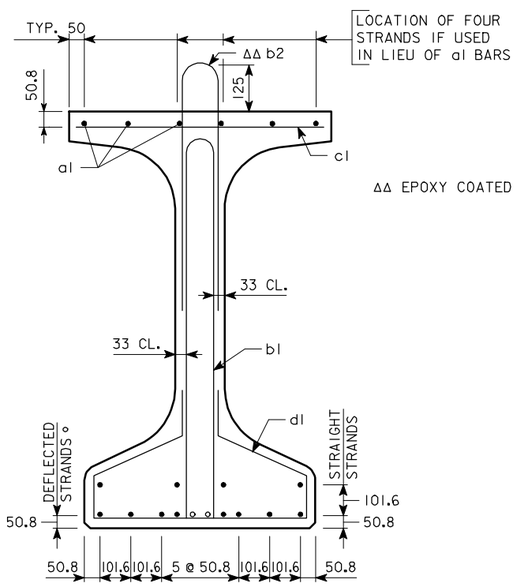

SECTION A-A

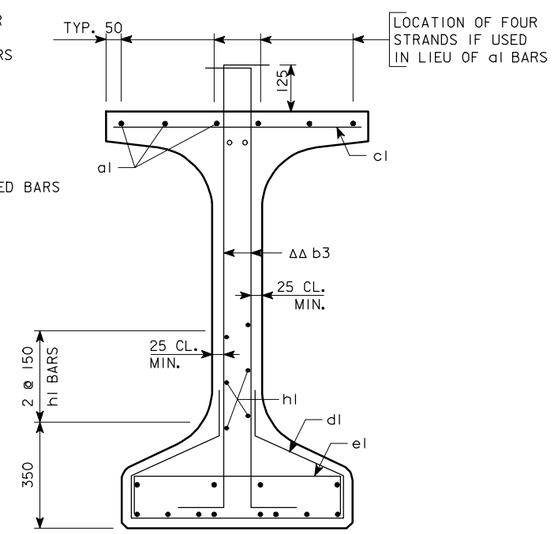

SECTION B-B

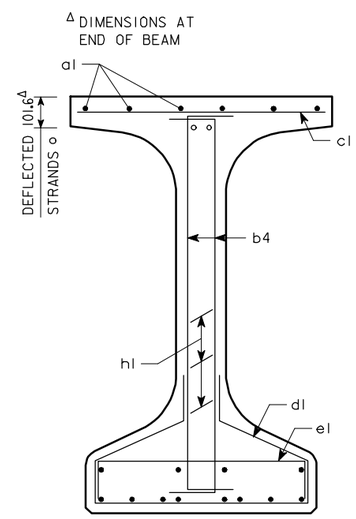

SECTION C-C

AREA = 483 090 mm²
$\bar{y}_b$ = 626 mm
I = 118 984 000 000 mm⁴

BEAM SECTION PROPERTIES

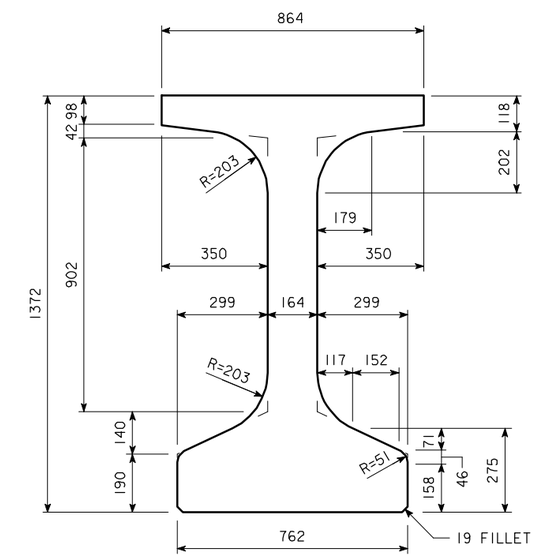

BTD BEAM CROSS SECTION

BTD19M BEAM DETAILS

IOWA DEPARTMENT OF TRANSPORTATION - HIGHWAY DIVISION

DESIGN SHEET NO. ____ OF ____ FILE NO. _____ DESIGN NO. _____

DESIGN TEAM	BULB TEE "D" BEAM - 19 800 mm SPAN	STANDARD SHEET M4734	COUNTY	PROJECT NUMBER	SHEET NUMBER

HMBT4734.SOI - THIS SHEET ISSUED 05-04.

10-FEB-2006 14:13 ajeffer W:\Projects\0000006002\BRFinal\MetricBeams.dgn mbtd4734

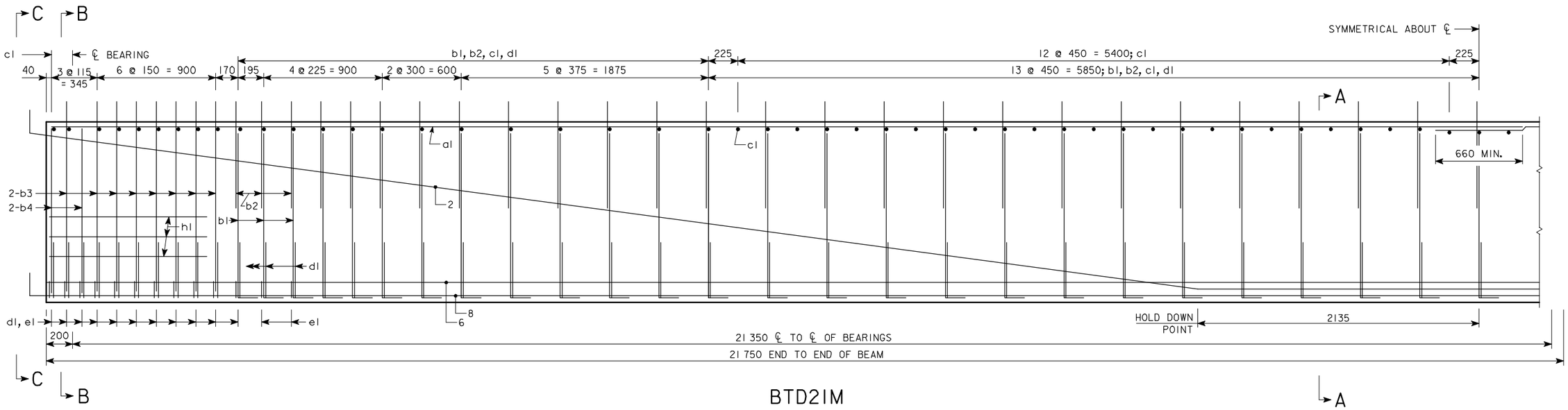

BTD21M

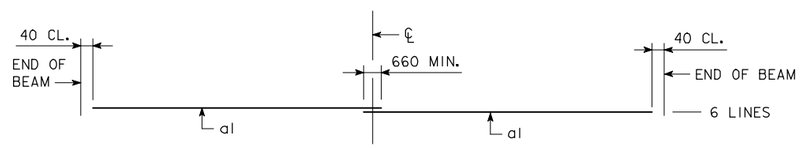

TOP FLANGE LONGITUDINAL BAR LAYOUT

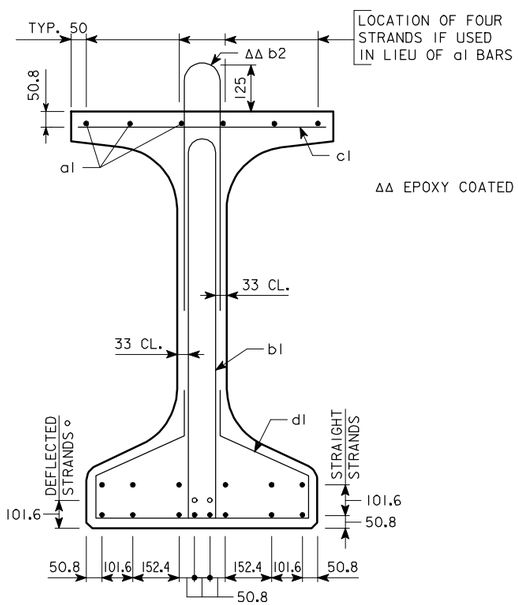

SECTION A-A

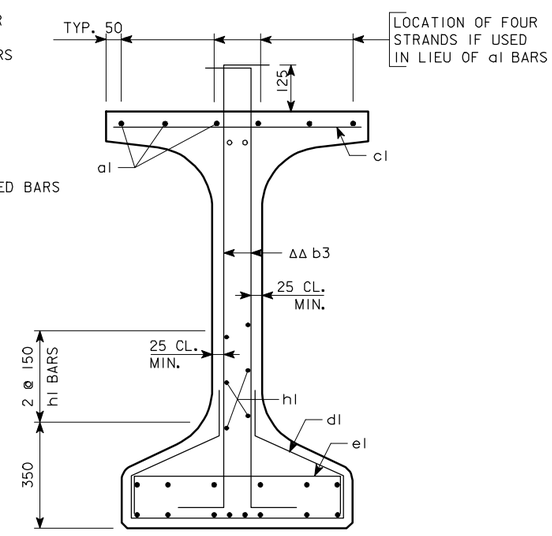

SECTION B-B

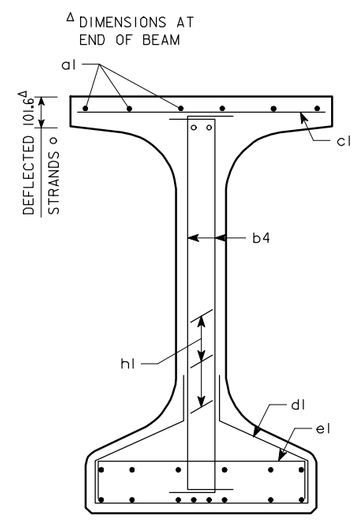

SECTION C-C

AREA = 483 090 mm²
$\bar{y}_b$ = 626 mm
I = 118 984 000 000 mm⁴

BEAM SECTION PROPERTIES

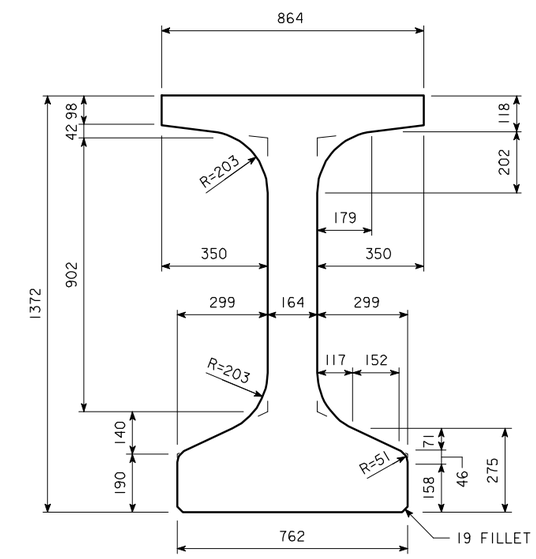

BTD BEAM CROSS SECTION

BTD21M BEAM DETAILS

IOWA DEPARTMENT OF TRANSPORTATION - HIGHWAY DIVISION

DESIGN SHEET NO. ____ OF ____ FILE NO. _____ DESIGN NO. _____

DESIGN TEAM	BULB TEE "D" BEAM - 21 350 mm SPAN	STANDARD SHEET M4735	COUNTY	PROJECT NUMBER	SHEET NUMBER

HMBT4735.S01 - THIS SHEET ISSUED 05-04.

10-FEB-2006 14:13 ajeffer W:\Projects\0000006002\BRFinal\MetricBeams.dgn mbtd4735

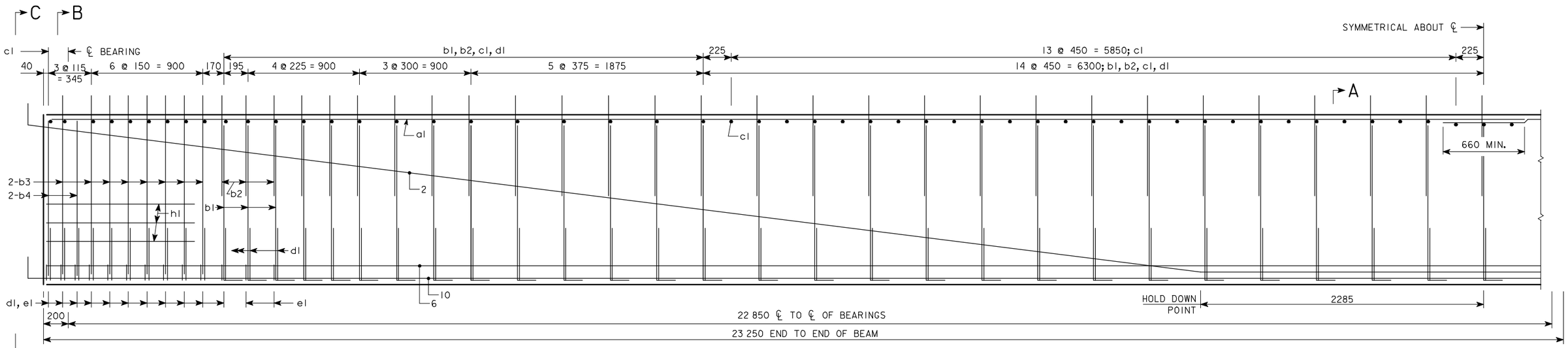

BTD22M

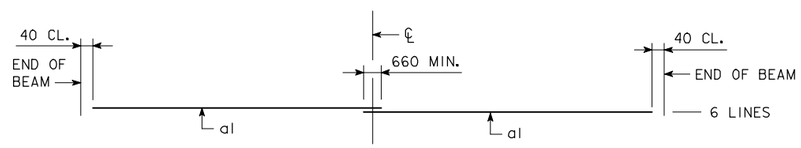

TOP FLANGE LONGITUDINAL BAR LAYOUT

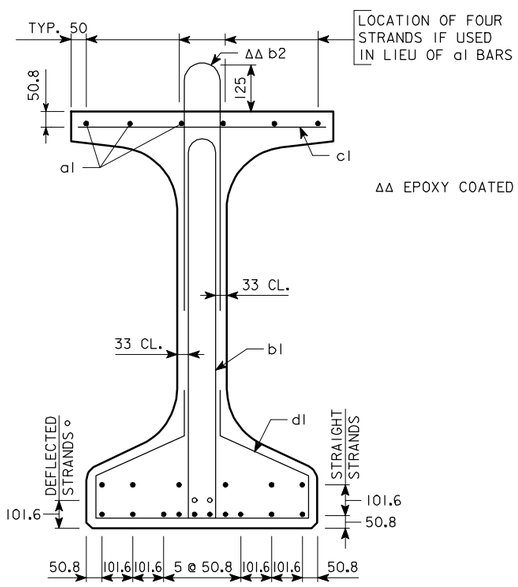

SECTION A-A

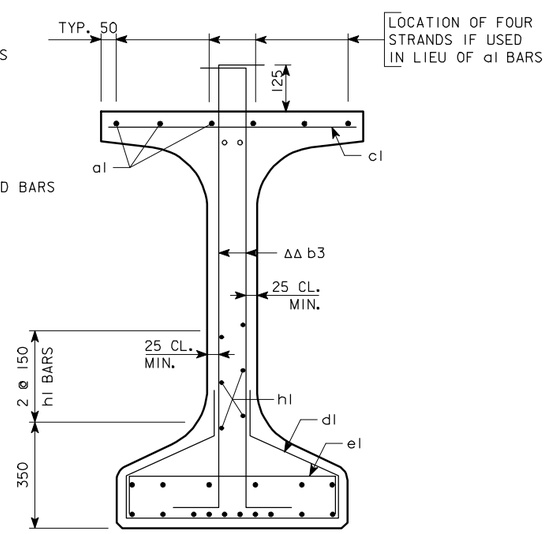

SECTION B-B

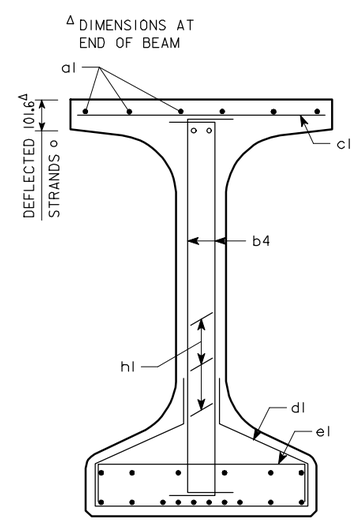

SECTION C-C

AREA = 483 090 mm²
$\bar{y}_b$ = 626 mm
I = 118 984 000 000 mm⁴

BEAM SECTION PROPERTIES

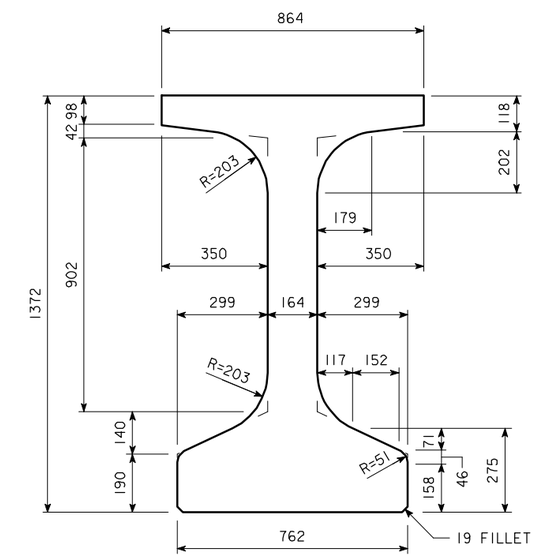

BTD BEAM CROSS SECTION

BTD22M BEAM DETAILS

IOWA DEPARTMENT OF TRANSPORTATION - HIGHWAY DIVISION

DESIGN SHEET NO. ____ OF ____ FILE NO. _____ DESIGN NO. _____

DESIGN TEAM	BULB TEE "D" BEAM - 22 850 mm SPAN	STANDARD SHEET M4736	COUNTY	PROJECT NUMBER	SHEET NUMBER

HMBT4736.S01 - THIS SHEET ISSUED 05-04.

10-FEB-2006 14:14 ajeffer W:\Projects\0000006002\BRFinal\MetricBeams.dgn mbtd4736

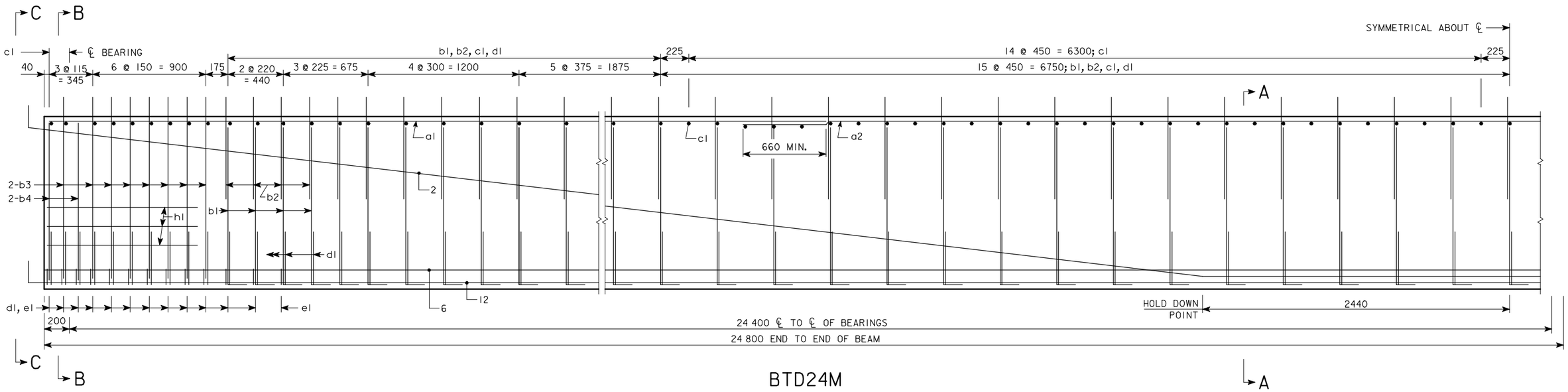

BTD24M

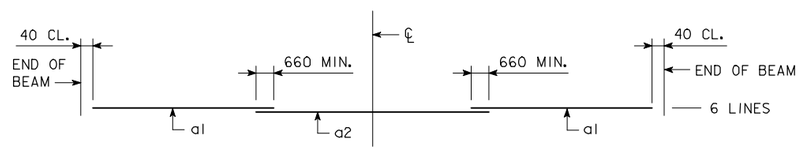

TOP FLANGE LONGITUDINAL BAR LAYOUT

AREA = 483 090 mm²
$\bar{y}_b$ = 626 mm
I = 118 984 000 000 mm⁴

BEAM SECTION PROPERTIES

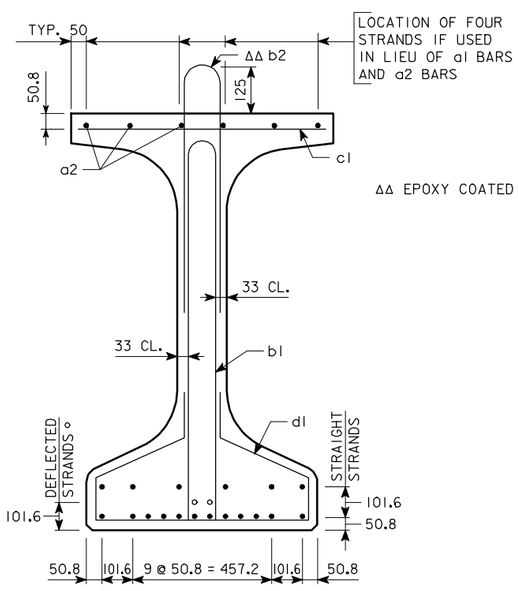

SECTION A-A

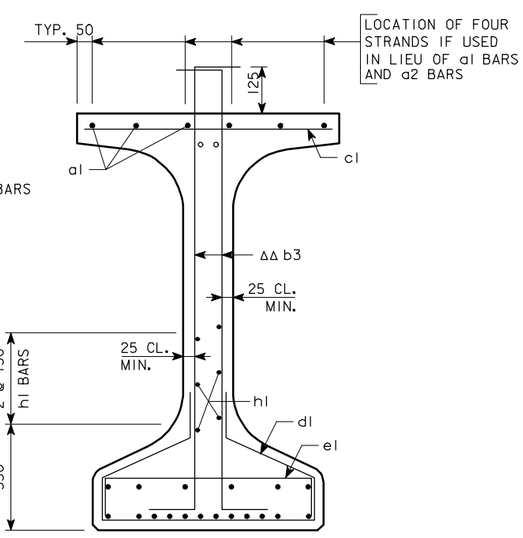

SECTION B-B

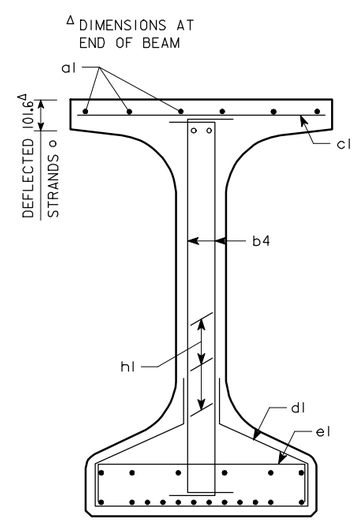

SECTION C-C

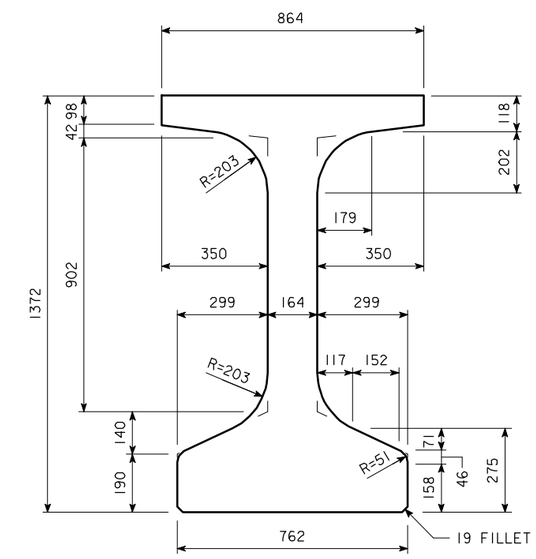

BTD BEAM CROSS SECTION

BTD24M BEAM DETAILS

IOWA DEPARTMENT OF TRANSPORTATION - HIGHWAY DIVISION

DESIGN SHEET NO. ____ OF ____ FILE NO. _____ DESIGN NO. _____

DESIGN TEAM	BULB TEE "D" BEAM - 24 400 mm SPAN	STANDARD SHEET M4737	COUNTY	PROJECT NUMBER	SHEET NUMBER

HMBT4737.SOI - THIS SHEET ISSUED 05-04.

10-FEB-2006 14:14 ajeffer W:\Projects\0000006002\BRFinal\MetricBeams.dgn mbtd4737

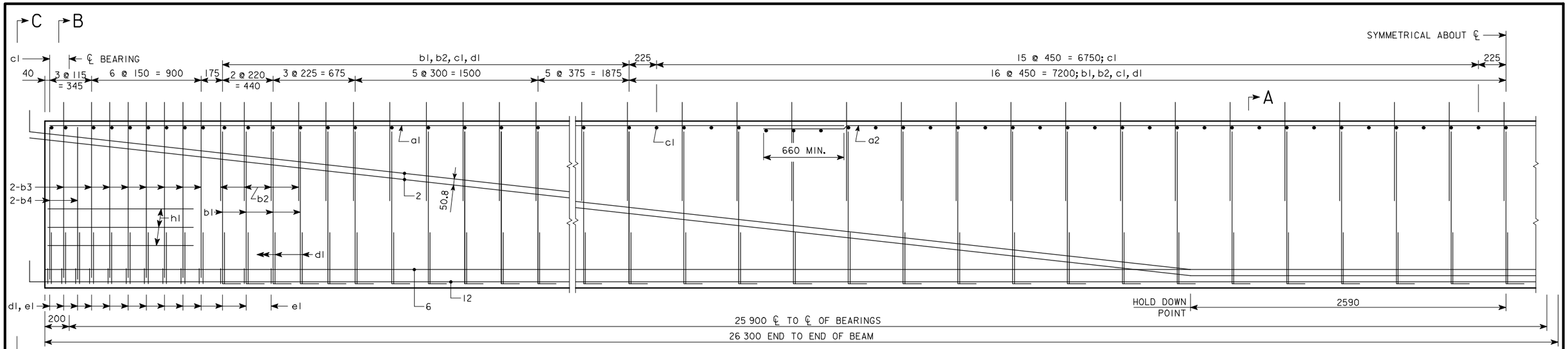

BTD25M

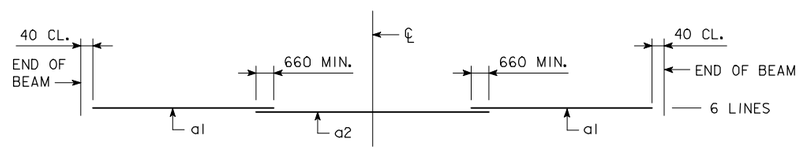

TOP FLANGE LONGITUDINAL BAR LAYOUT

AREA = 483 090 mm²
$\bar{y}_b$ = 626 mm
I = 118 984 000 000 mm⁴

BEAM SECTION PROPERTIES

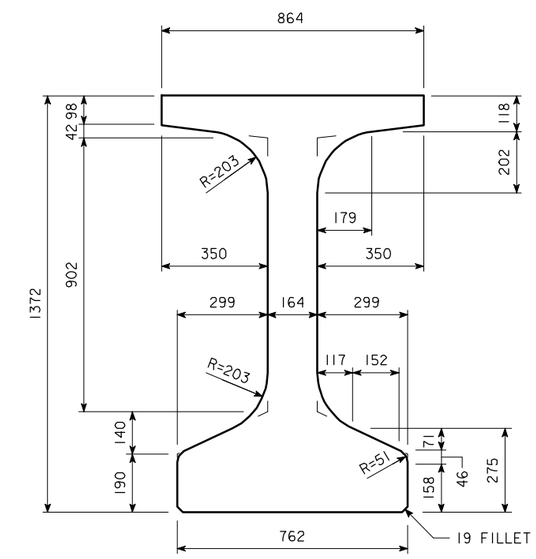

BTD BEAM CROSS SECTION

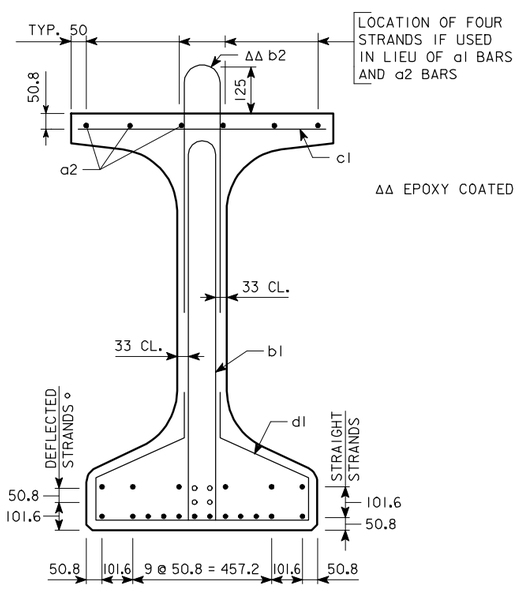

SECTION A-A

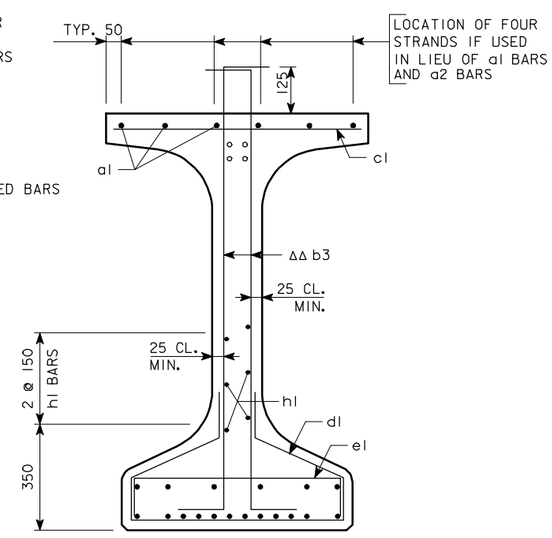

SECTION B-B

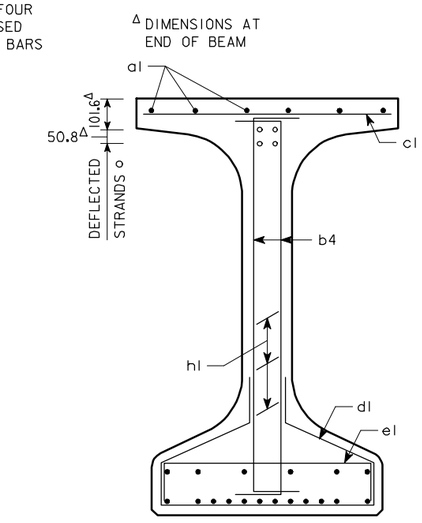

SECTION C-C

BTD25M BEAM DETAILS

IOWA DEPARTMENT OF TRANSPORTATION - HIGHWAY DIVISION

DESIGN SHEET NO. ____ OF ____ FILE NO. _____ DESIGN NO. _____

DESIGN TEAM	BULB TEE "D" BEAM - 25 900 mm SPAN	STANDARD SHEET M4738	COUNTY	PROJECT NUMBER	SHEET NUMBER

HMBT4738.S01 - THIS SHEET ISSUED 05-04.

10-FEB-2006 14:14 ajeffer W:\Projects\0000006002\BRFinal\MetricBeams.dgn mbtd4738

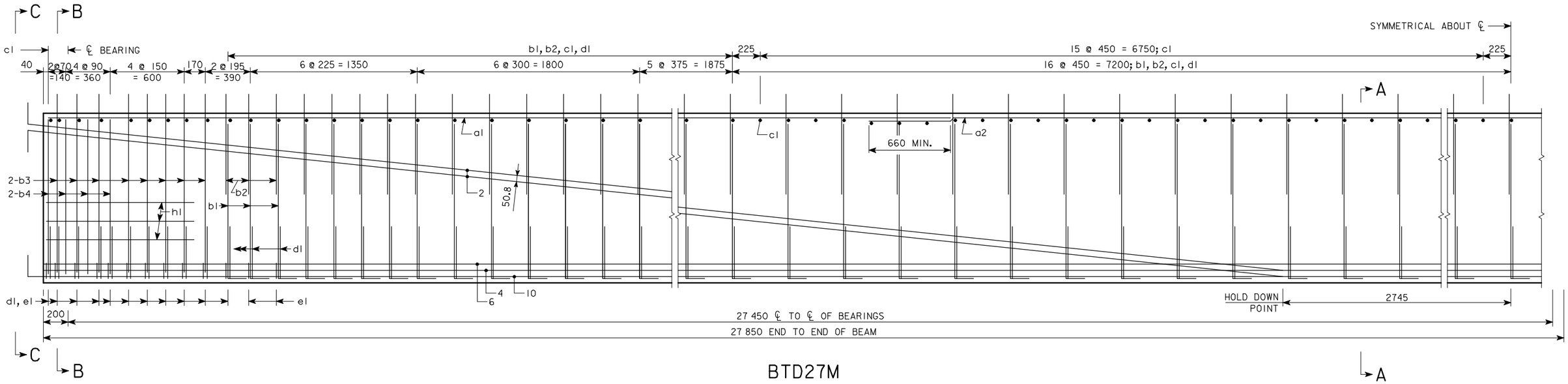

BTD27M

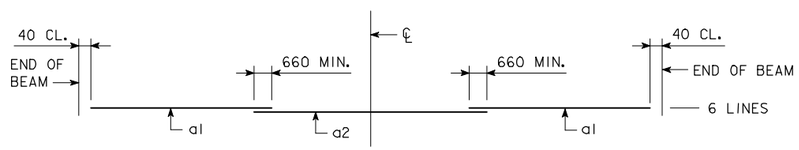

TOP FLANGE LONGITUDINAL BAR LAYOUT

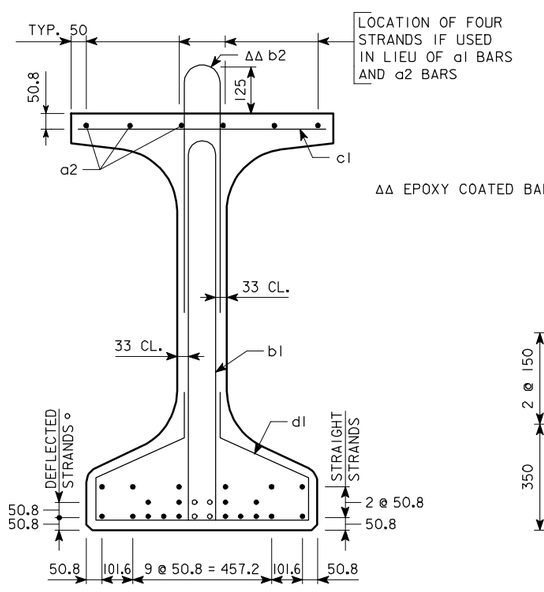

SECTION A-A

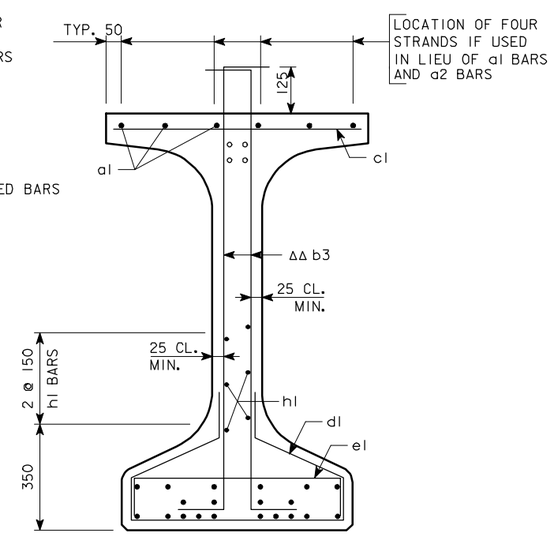

SECTION B-B

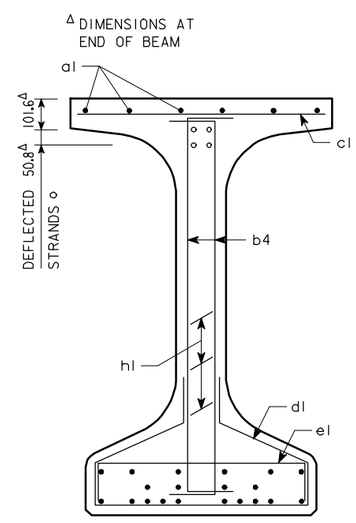

SECTION C-C

AREA = 483 090 mm²
$\bar{y}_b$ = 626 mm
I = 118 984 000 000 mm⁴

BEAM SECTION PROPERTIES

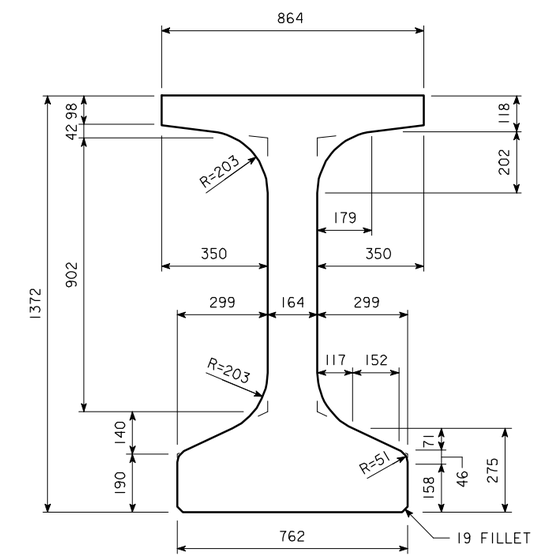

BTD BEAM CROSS SECTION

BTD27M BEAM DETAILS

IOWA DEPARTMENT OF TRANSPORTATION - HIGHWAY DIVISION

DESIGN SHEET NO. ____ OF ____ FILE NO. _____ DESIGN NO. _____

DESIGN TEAM	BULB TEE "D" BEAM - 27 450 mm SPAN	STANDARD SHEET M4739	COUNTY	PROJECT NUMBER	SHEET NUMBER

HMBT4739.SOI - THIS SHEET ISSUED 05-04.

10-FEB-2006 14:15 ajeffer W:\Projects\0000006002\BRFinal\MetricBeams.dgn mbtd4739

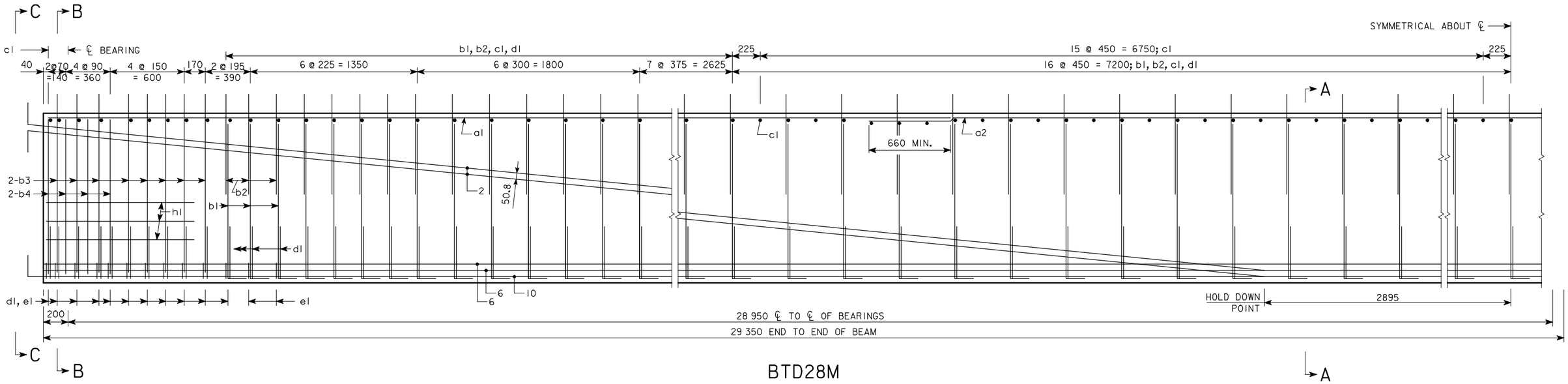

BTD28M

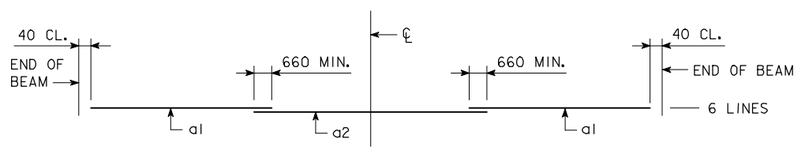

TOP FLANGE LONGITUDINAL BAR LAYOUT

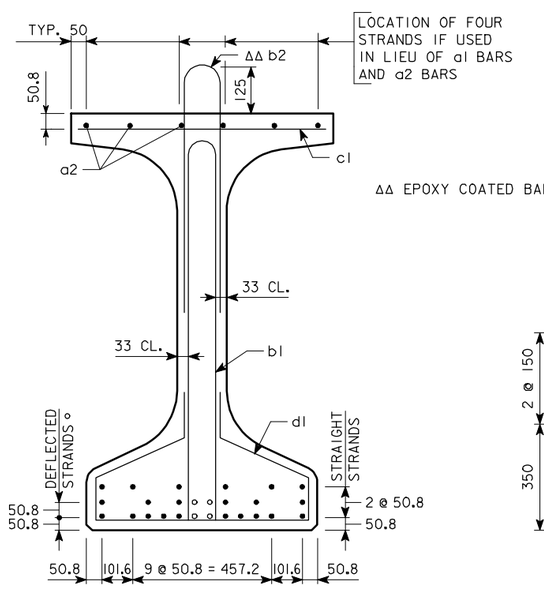

SECTION A-A

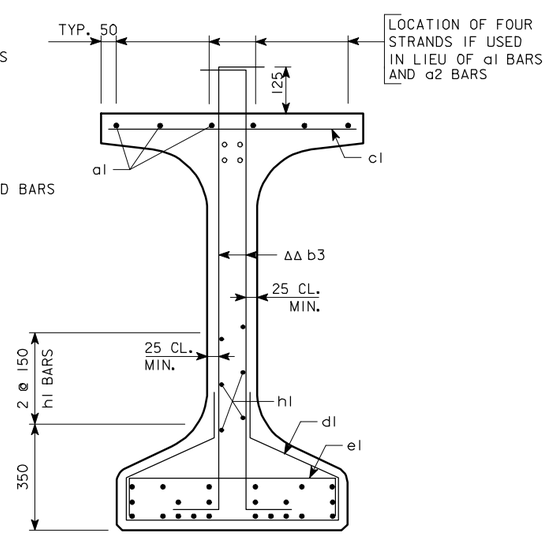

SECTION B-B

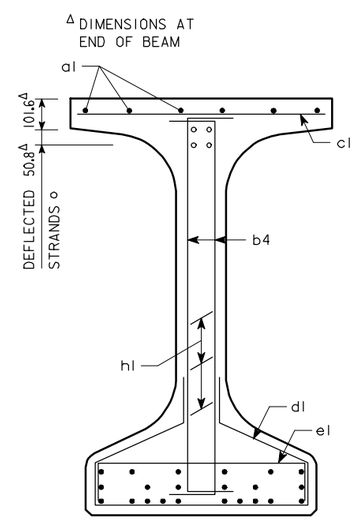

SECTION C-C

AREA = 483 090 mm²
$\bar{y}_b$ = 626 mm
I = 118 984 000 000 mm⁴

BEAM SECTION PROPERTIES

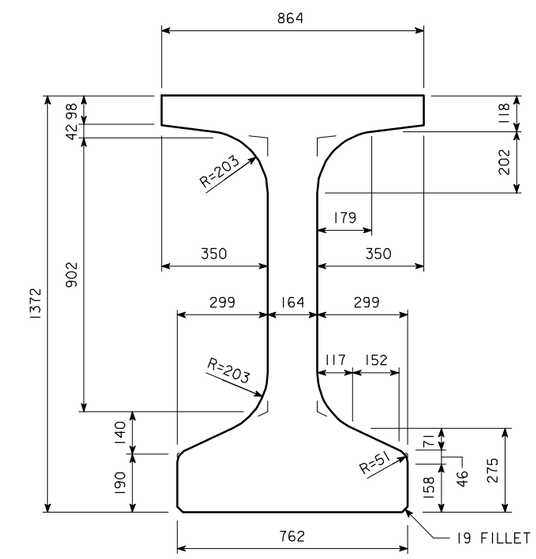

BTD BEAM CROSS SECTION

BTD28M BEAM DETAILS

IOWA DEPARTMENT OF TRANSPORTATION - HIGHWAY DIVISION

DESIGN SHEET NO. ____ OF ____ FILE NO. _____ DESIGN NO. _____

DESIGN TEAM	BULB TEE "D" BEAM - 28 950 mm SPAN	STANDARD SHEET M4740	COUNTY	PROJECT NUMBER	SHEET NUMBER

HMBT4740.SOI - THIS SHEET ISSUED 05-04.

10-FEB-2006 14:15 ajeffer W:\Projects\0000006002\BRFinal\MetricBeams.dgn mbtd4740

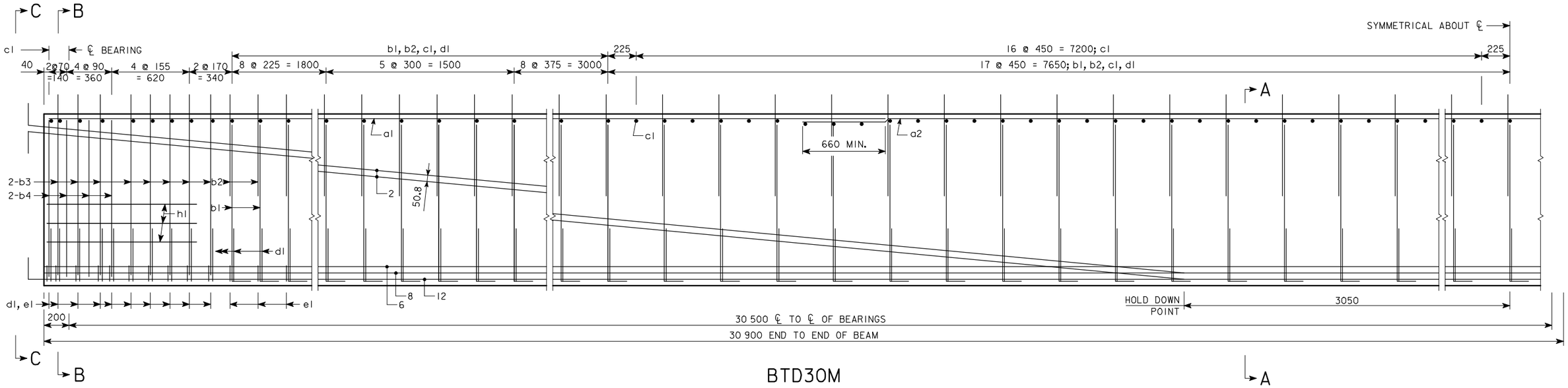

BTD30M

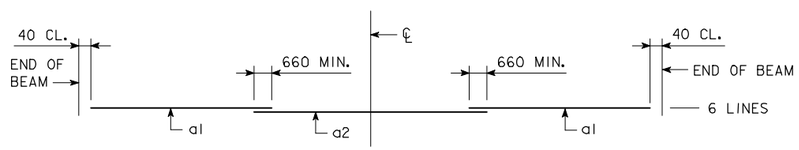

TOP FLANGE LONGITUDINAL BAR LAYOUT

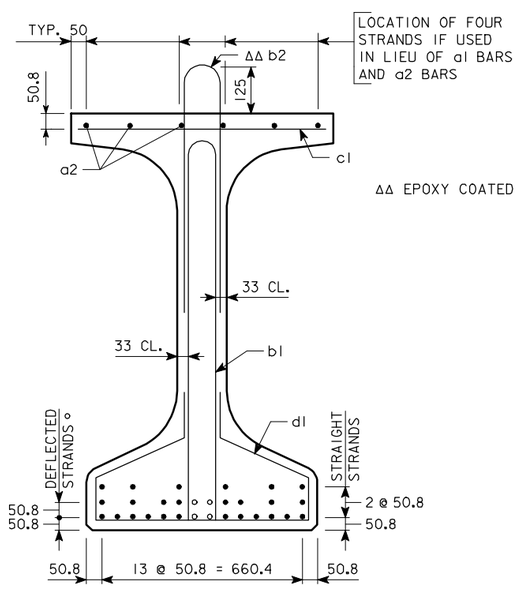

SECTION A-A

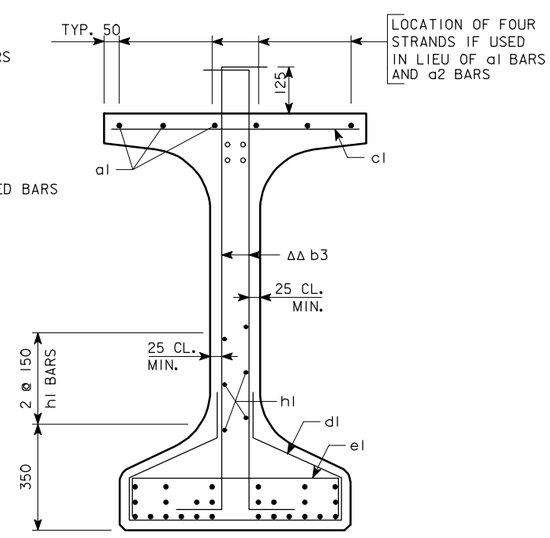

SECTION B-B

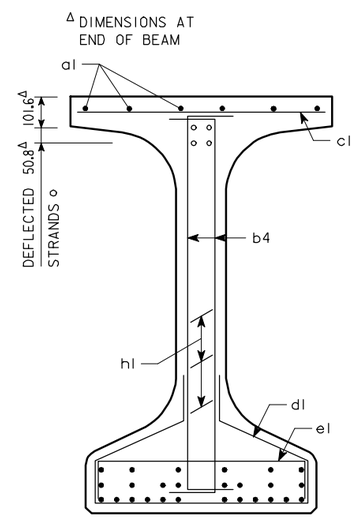

SECTION C-C

AREA = 483 090 mm²
$\bar{y}_b$ = 626 mm
I = 118 984 000 000 mm⁴

BEAM SECTION PROPERTIES

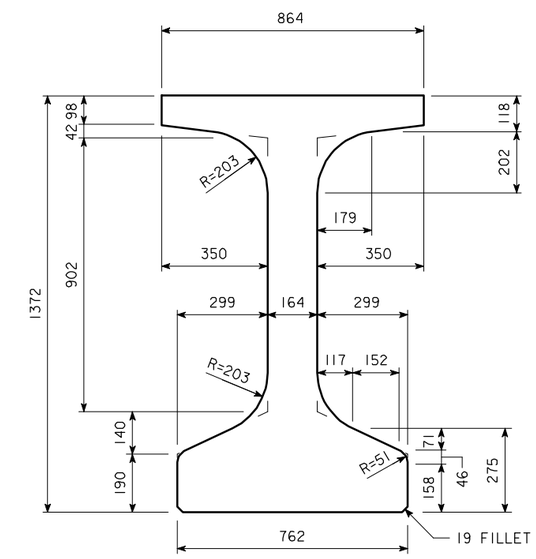

BTD BEAM CROSS SECTION

BTD30M BEAM DETAILS

IOWA DEPARTMENT OF TRANSPORTATION - HIGHWAY DIVISION

DESIGN SHEET NO. ____ OF ____ FILE NO. _____ DESIGN NO. _____

DESIGN TEAM	BULB TEE "D" BEAM - 30 500 mm SPAN	STANDARD SHEET M4741	COUNTY	PROJECT NUMBER	SHEET NUMBER

HMBT4741.SOI - THIS SHEET ISSUED 05-04.

10-FEB-2006 14:16 ajeffer W:\Projects\0000006002\BRFinal\MetricBeams.dgn mbtd4741

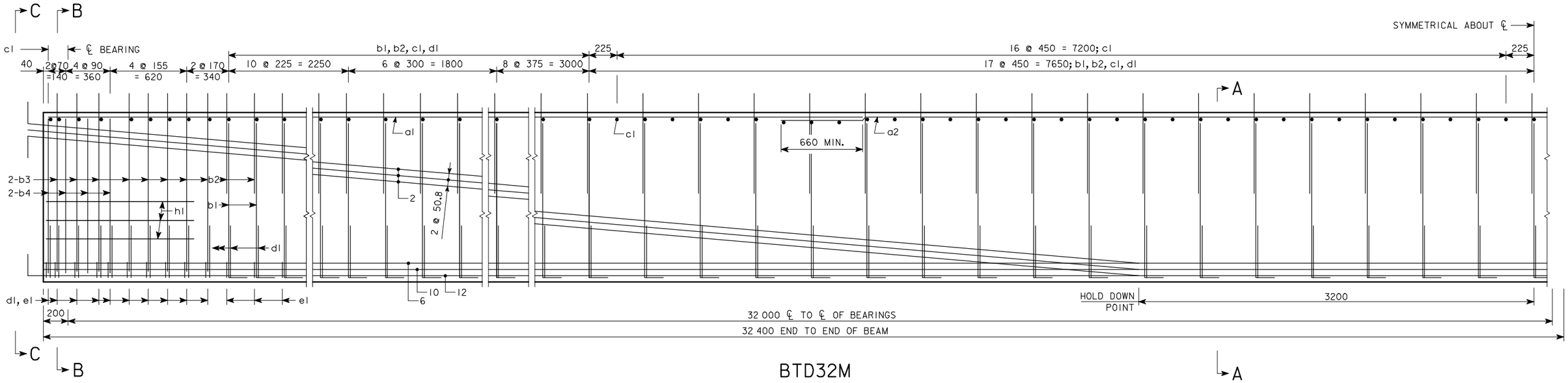

BTD32M

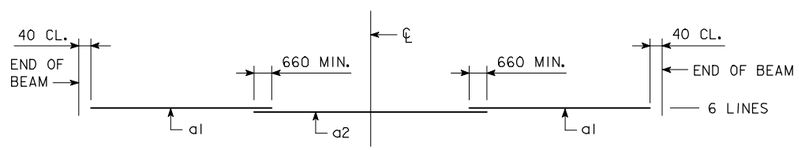

TOP FLANGE LONGITUDINAL BAR LAYOUT

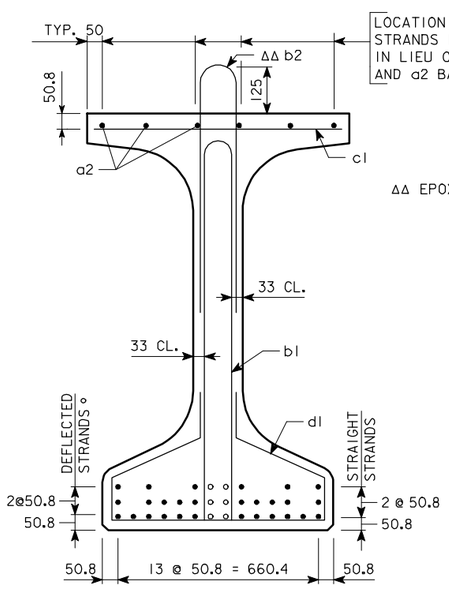

SECTION A-A

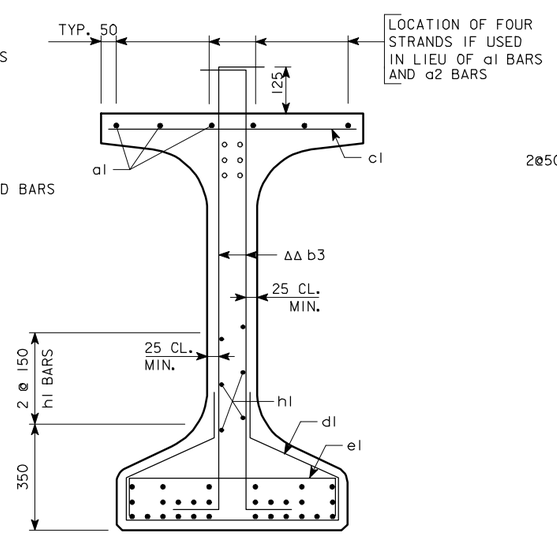

SECTION B-B

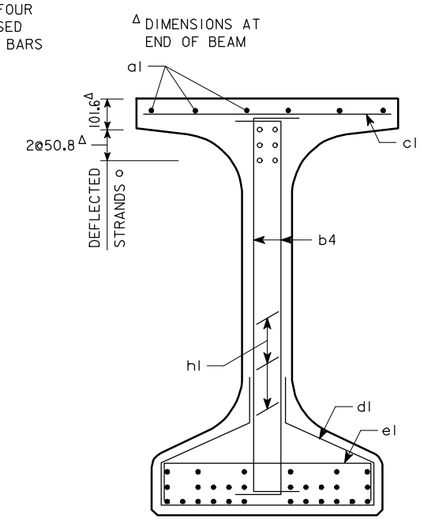

SECTION C-C

AREA = 483 090 mm²
$\bar{y}_b$ = 626 mm
I = 118 984 000 000 mm⁴

BEAM SECTION PROPERTIES

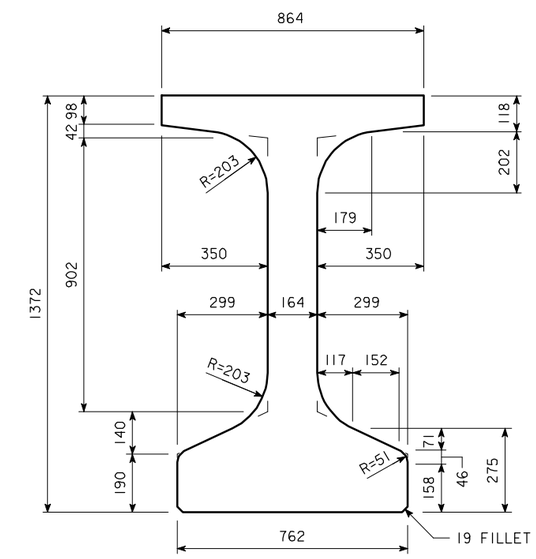

BTD BEAM CROSS SECTION

BTD32M BEAM DETAILS

IOWA DEPARTMENT OF TRANSPORTATION - HIGHWAY DIVISION

DESIGN SHEET NO. ____ OF ____ FILE NO. _____ DESIGN NO. _____

DESIGN TEAM	BULB TEE "D" BEAM - 32 000 mm SPAN	STANDARD SHEET M4742	COUNTY	PROJECT NUMBER	SHEET NUMBER

HMBT4742.S01 - THIS SHEET ISSUED 05-04.

10-FEB-2006 14:16 ajeffer W:\Projects\0000006002\BRFinal\MetricBeams.dgn mbtd4742

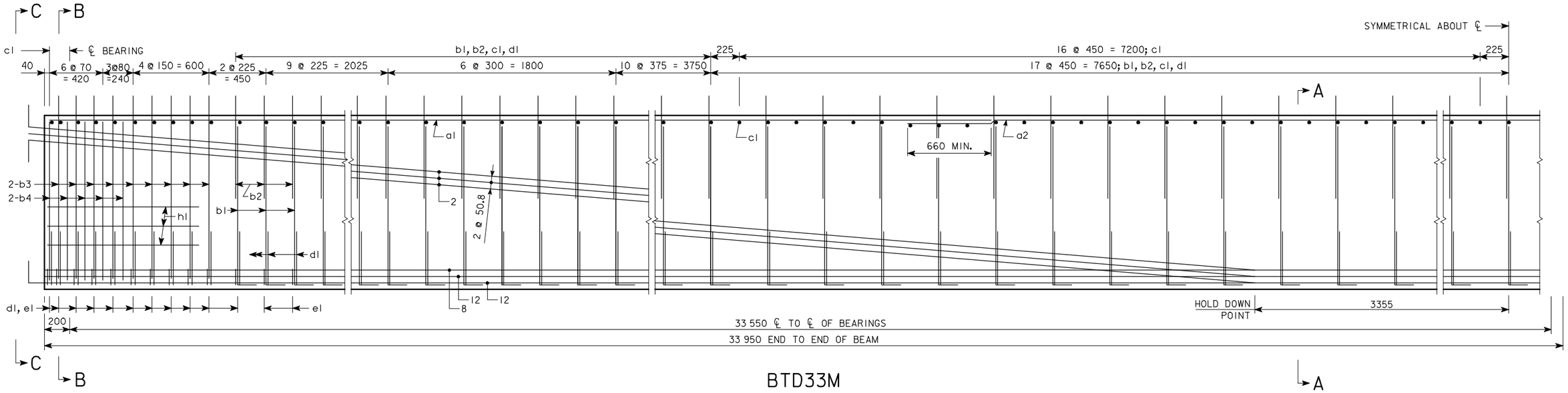

BTD33M

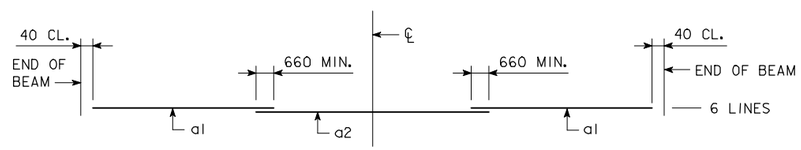

TOP FLANGE LONGITUDINAL BAR LAYOUT

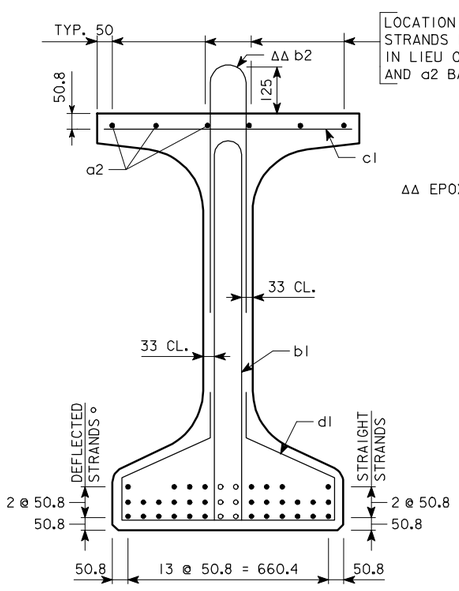

SECTION A-A

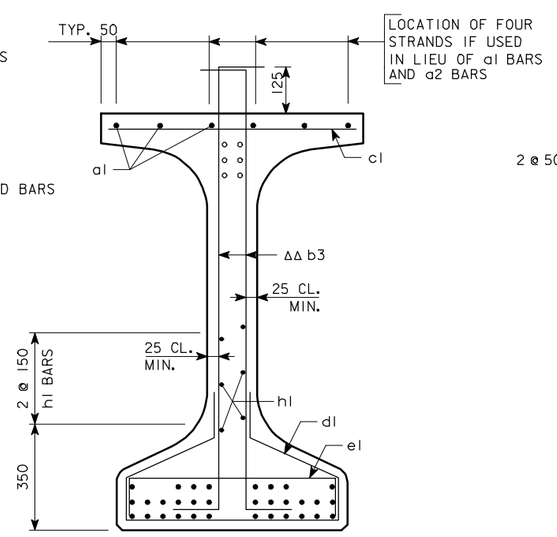

SECTION B-B

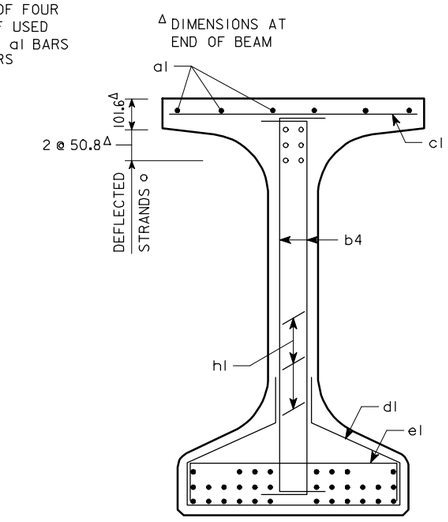

SECTION C-C

AREA = 483 090 mm²
$\bar{y}_b$ = 626 mm
I = 118 984 000 000 mm⁴

BEAM SECTION PROPERTIES

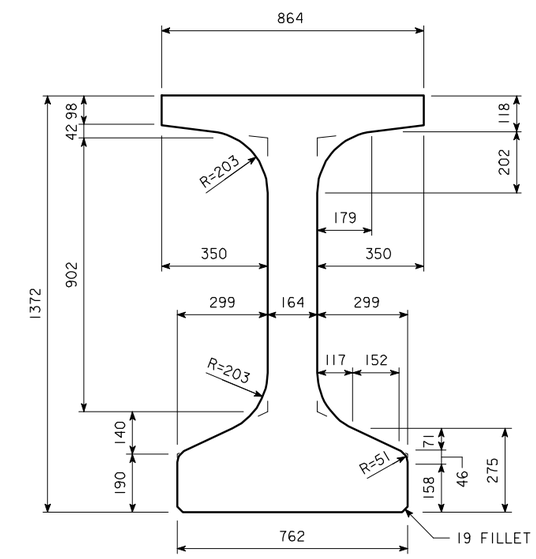

BTD BEAM CROSS SECTION

BTD33M BEAM DETAILS

IOWA DEPARTMENT OF TRANSPORTATION - HIGHWAY DIVISION

DESIGN SHEET NO. ____ OF ____ FILE NO. _____ DESIGN NO. _____

DESIGN TEAM	BULB TEE "D" BEAM - 33 550 mm SPAN	STANDARD SHEET M4743	COUNTY	PROJECT NUMBER	SHEET NUMBER

HMBT4743.SOI - THIS SHEET ISSUED 05-04.

10-FEB-2006 14:17 ajeffer W:\Projects\0000006002\BRFinal\MetricBeams.dgn mbtd4743

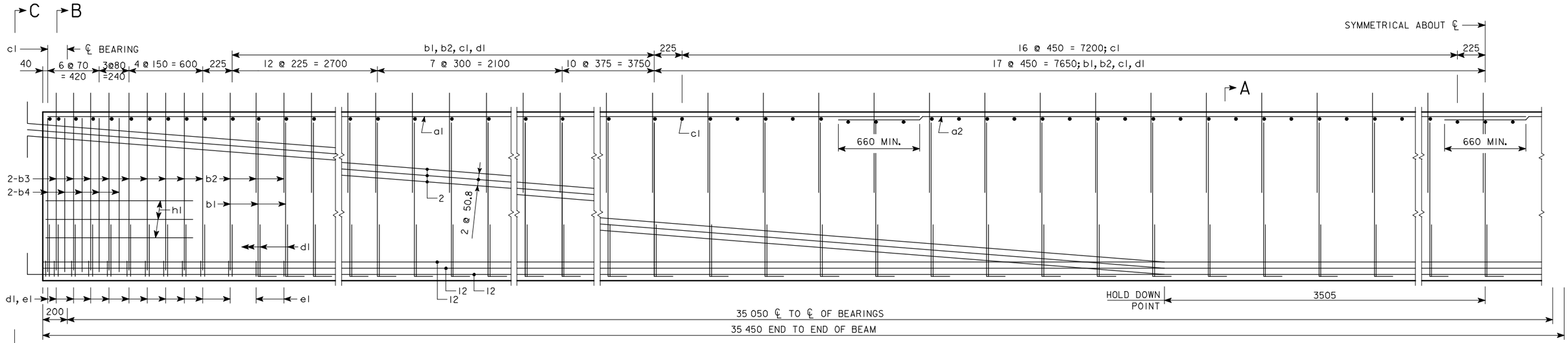

BTD35M

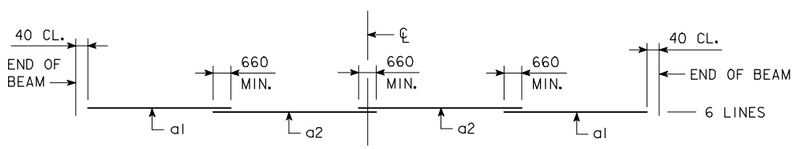

TOP FLANGE LONGITUDINAL BAR LAYOUT

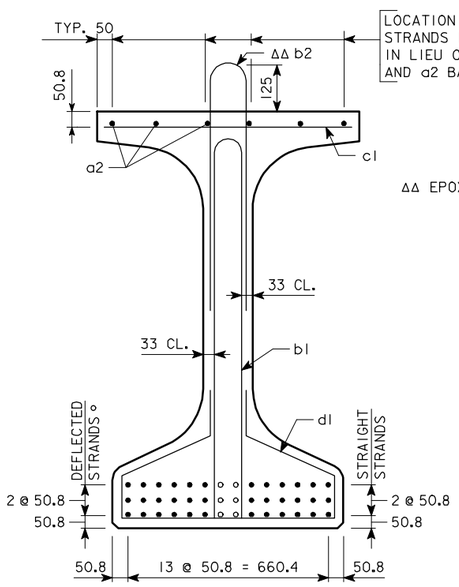

SECTION A-A

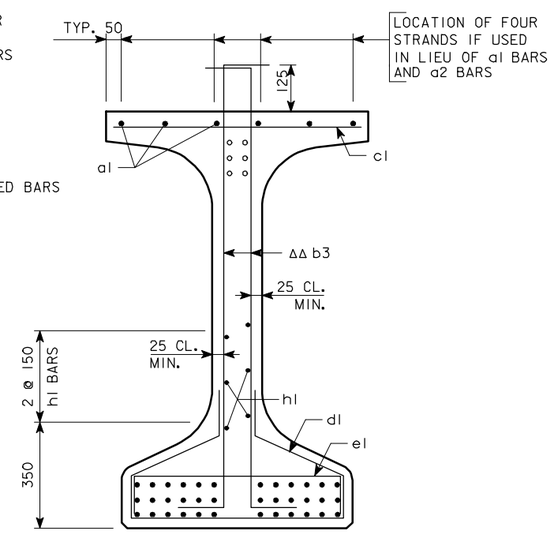

SECTION B-B

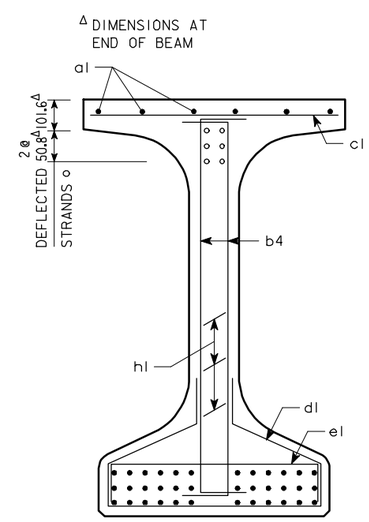

SECTION C-C

AREA = 483 090 mm²
$\bar{y}_b$ = 626 mm
I = 118 984 000 000 mm⁴

BEAM SECTION PROPERTIES

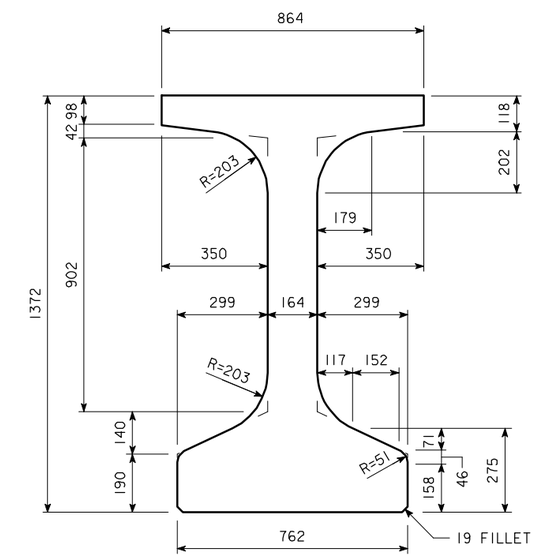

BTD BEAM CROSS SECTION

BTD35M BEAM DETAILS

IOWA DEPARTMENT OF TRANSPORTATION - HIGHWAY DIVISION

DESIGN SHEET NO. ____ OF ____ FILE NO. _____ DESIGN NO. _____

DESIGN TEAM	BULB TEE "D" BEAM - 35 050 mm SPAN	STANDARD SHEET M4744	COUNTY	PROJECT NUMBER	SHEET NUMBER

HMBT4744.SOI - THIS SHEET ISSUED 05-04.

10-FEB-2006 14:17 ajeffer W:\Projects\0000006002\BRFinal\MetricBeams.dgn mbtd4744

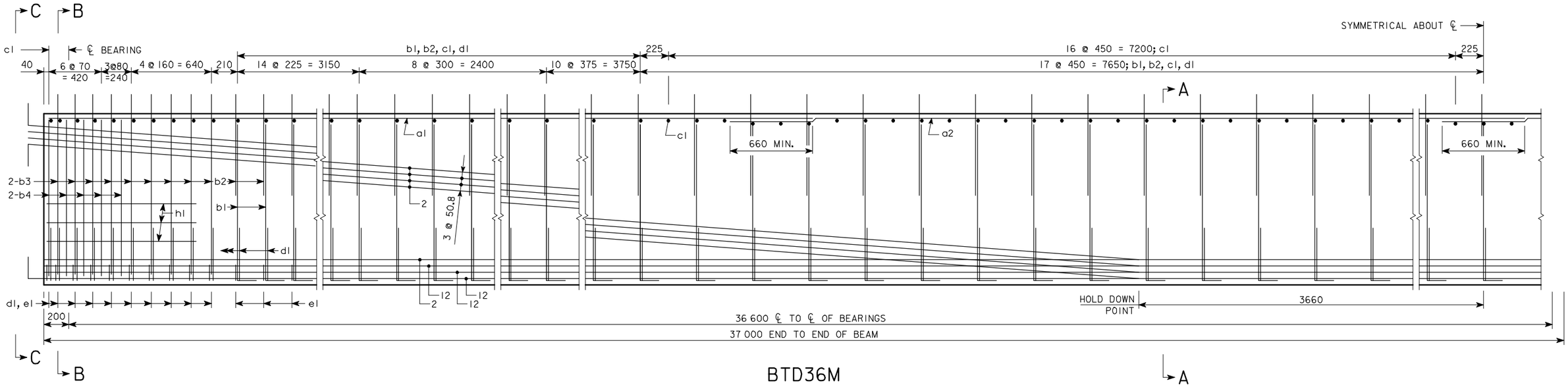

BTD36M

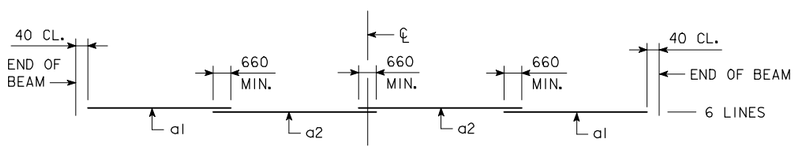

TOP FLANGE LONGITUDINAL BAR LAYOUT

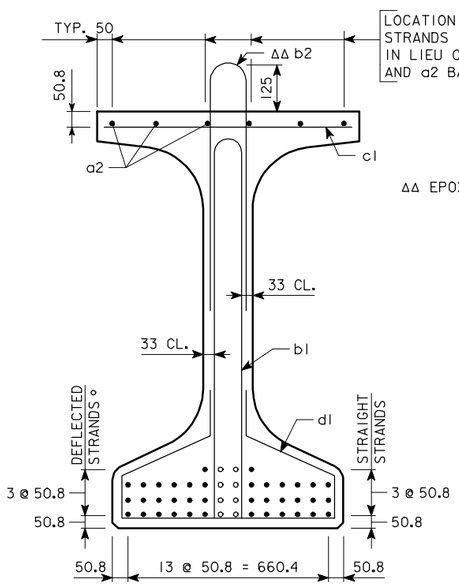

SECTION A-A

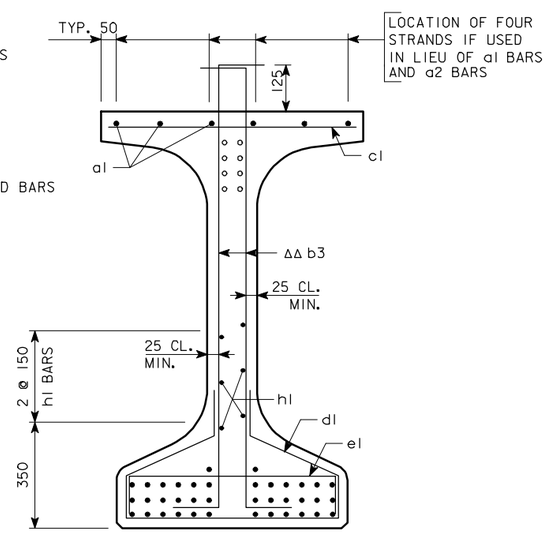

SECTION B-B

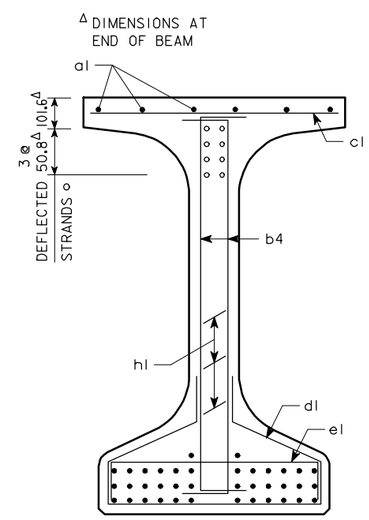

SECTION C-C

AREA = 483 090 mm²
$\bar{y}_b$ = 626 mm
I = 118 984 000 000 mm⁴

BEAM SECTION PROPERTIES

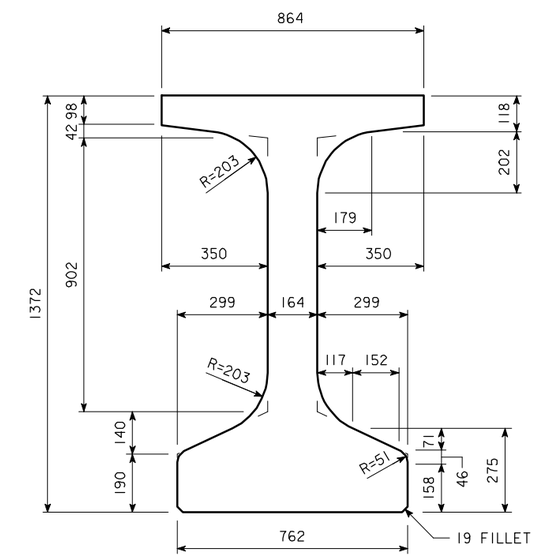

BTD BEAM CROSS SECTION

BTD36M BEAM DETAILS

IOWA DEPARTMENT OF TRANSPORTATION - HIGHWAY DIVISION

DESIGN SHEET NO. ____ OF ____ FILE NO. _____ DESIGN NO. _____

DESIGN TEAM	BULB TEE "D" BEAM - 36 600 mm SPAN	STANDARD SHEET M4745	COUNTY	PROJECT NUMBER	SHEET NUMBER

HMBT4745.S01 - THIS SHEET ISSUED 05-04.

10-FEB-2006 14:17 ajeffer W:\Projects\0000006002\BRFinal\MetricBeams.dgn mbtd4745

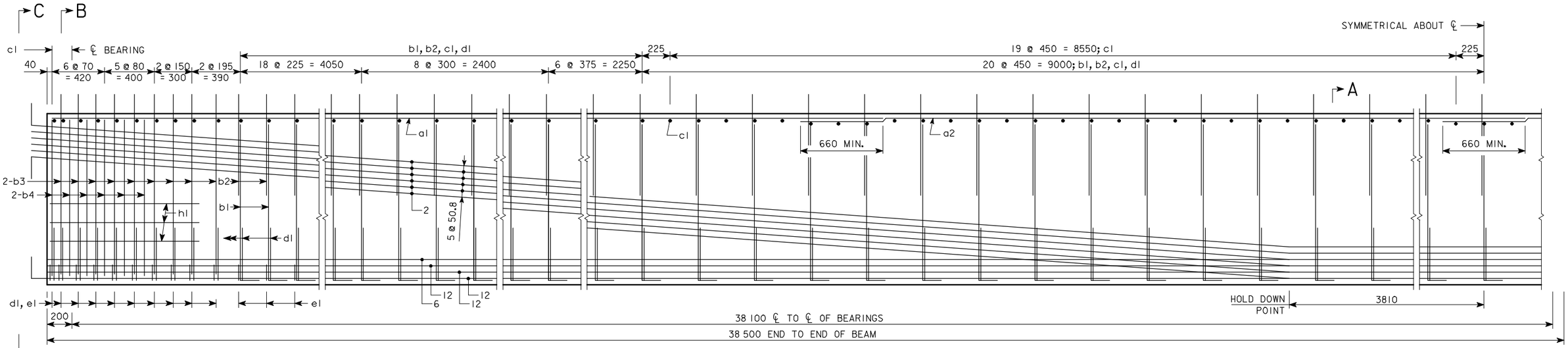

BTD38M

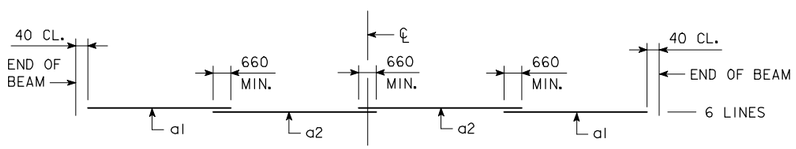

TOP FLANGE LONGITUDINAL BAR LAYOUT

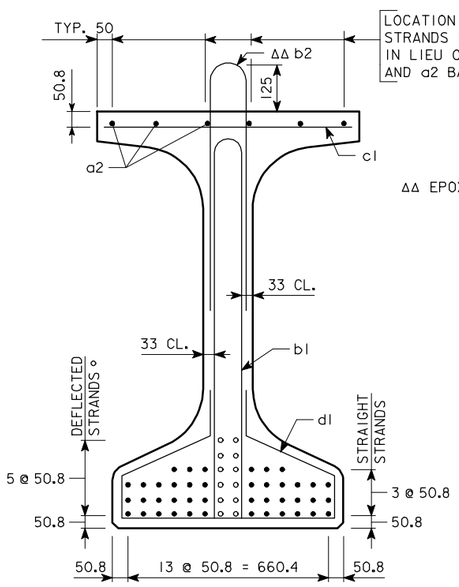

SECTION A-A

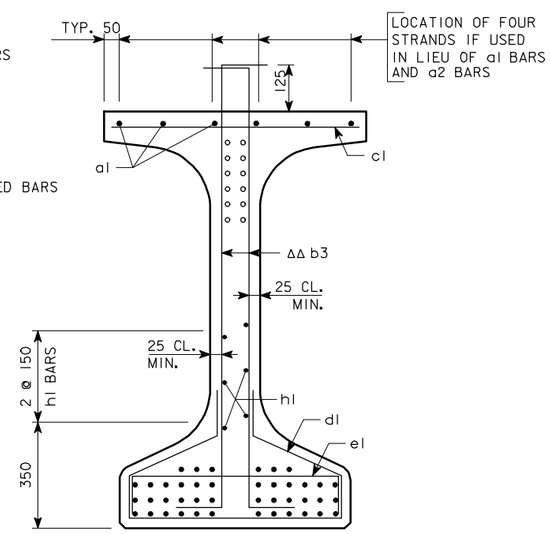

SECTION B-B

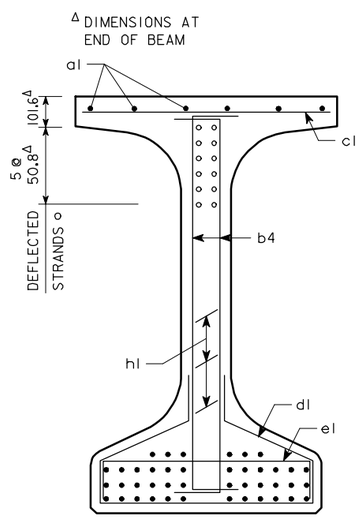

SECTION C-C

AREA = 483 090 mm²
$\bar{y}_b$ = 626 mm
I = 118 984 000 000 mm⁴

BEAM SECTION PROPERTIES

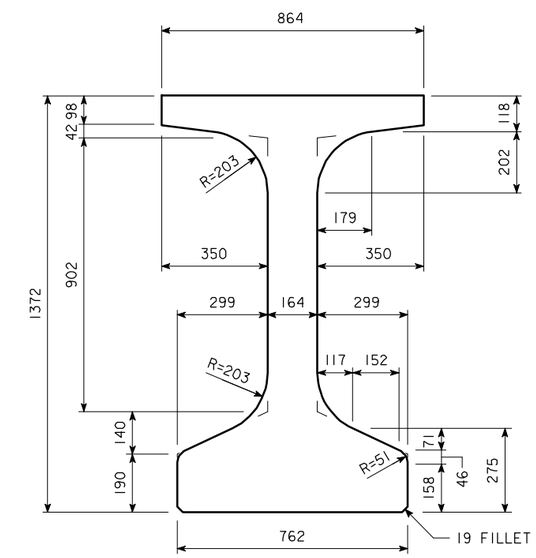

BTD BEAM CROSS SECTION

BTD38M BEAM DETAILS

IOWA DEPARTMENT OF TRANSPORTATION - HIGHWAY DIVISION

DESIGN SHEET NO. ____ OF ____ FILE NO. _____ DESIGN NO. _____

DESIGN TEAM	BULB TEE "D" BEAM - 38 100 mm SPAN	STANDARD SHEET M4746	COUNTY	PROJECT NUMBER	SHEET NUMBER

HMBT4746.S01 - THIS SHEET ISSUED 05-04.

10-FEB-2006 14:18 ajeffer W:\Projects\0000006002\BRFinal\MetricBeams.dgn mbtd4746

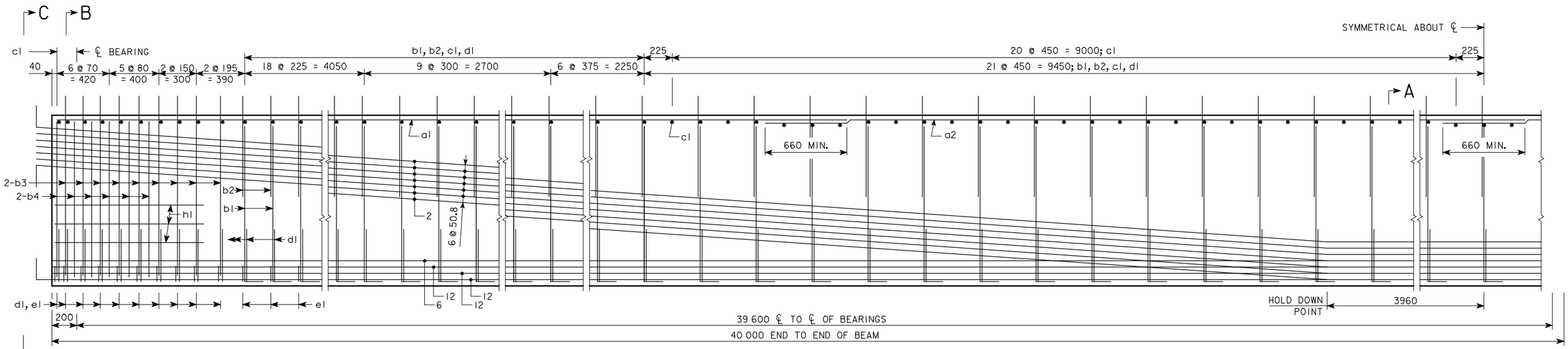

BTD39M

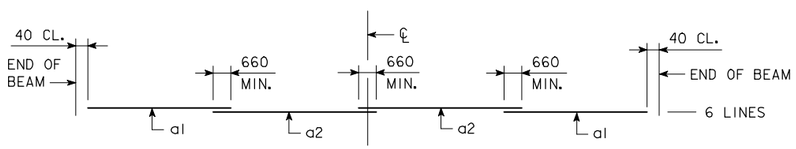

TOP FLANGE LONGITUDINAL BAR LAYOUT

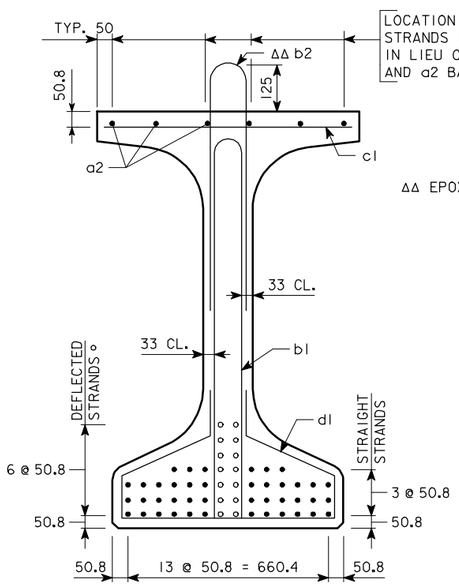

SECTION A-A

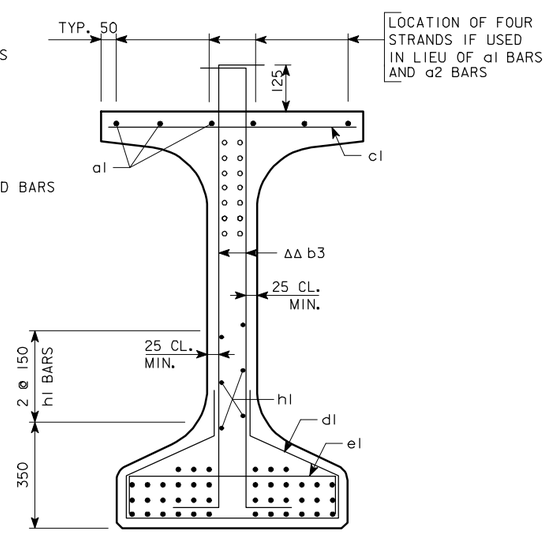

SECTION B-B

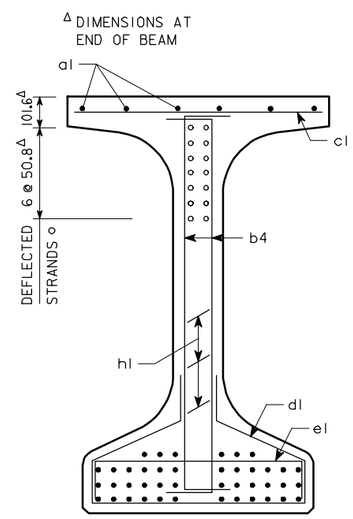

SECTION C-C

AREA = 483 090 mm²
$\bar{y}_b$ = 626 mm
I = 118 984 000 000 mm⁴

BEAM SECTION PROPERTIES

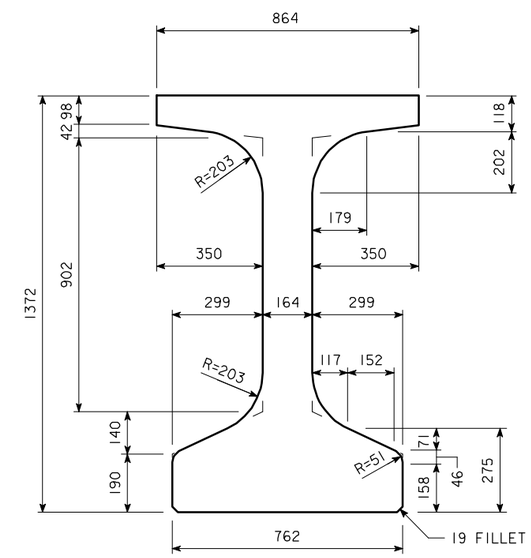

BTD BEAM CROSS SECTION

BTD39M BEAM DETAILS

IOWA DEPARTMENT OF TRANSPORTATION - HIGHWAY DIVISION

DESIGN SHEET NO. ____ OF ____ FILE NO. _____ DESIGN NO. _____

DESIGN TEAM	BULB TEE "D" BEAM - 39 600 mm SPAN	STANDARD SHEET M4747	COUNTY	PROJECT NUMBER	SHEET NUMBER

HMBT4747.S01 - THIS SHEET ISSUED 05-04.

10-FEB-2006 14:18 ajeffer W:\Projects\0000006002\BRFinal\MetricBeams.dgn mbtd4747

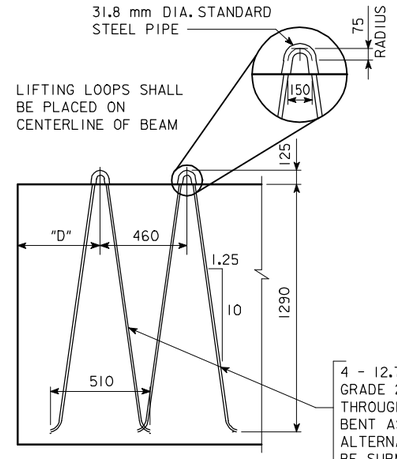

TYPICAL AT EACH END OF BEAM

LIFTING LOOP DETAIL

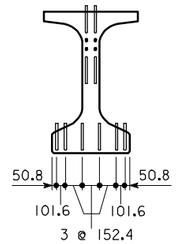

THE TOP AND BOTTOM ROWS OF THE DEFLECTED STRANDS ARE TO BE CUT WITH 460 mm PROJECTIONS WHICH ARE TO BE SHOP BENT AS SHOWN. THE REMAINING TOP DEFLECTED STRANDS ARE TO BE CUT WITH 175 mm PROJECTIONS.
SIX BOTTOM STRANDS ARE TO BE CUT WITH 460 mm PROJECTIONS WHICH ARE TO BE SHOP BENT AS SHOWN. THE REMAINING BOTTOM STRANDS ARE TO BE CUT OFF REASONABLY FLUSH WITH THE CONCRETE.

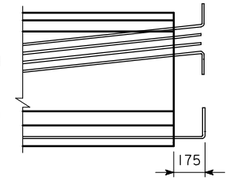

TYPICAL AT BOTH BEAM ENDS

STRAND PROJECTION AT BEAM ENDS WHEN EMBEDDED IN CONCRETE END DIAPHRAGMS

BTD4IM BEAM DATA

	BTD BEAM	SPAN LENGTH ℄-℄ BEARING	OVERALL BEAM LENGTH (mm)	CONCRETE STRENGTH f'ci (MPa)	CONCRETE STRENGTH f'c (MPa)	STRAND SIZE DIA. (mm)	NO. OF STRAND STRAIGHT	NO. OF STRAND DEFLECTED	TOTAL INITIAL PRESTRESS ③ kN	HOLD DOWN FORCE-kN	CAMBER (mm) AT RELEASE	CAMBER (mm) AFTER LOSSES	DEFLECTION (mm) Δ_D ② IMMEDIATE ① (ELASTIC) Δ_I STEEL DIAPHRAGM	DEFLECTION (mm) Δ_D ② TIME (PLASTIC) Δ_T STEEL DIAPHRAGM	PERMISSIBLE MAXIMUM SPACING HL-93 LOADING STEEL DIAPHRAGM	MASS (kg)	CONCRETE (m^3)	REINFORCING STEEL (MASS-kg)
④	BTD4IM	41 150	41 550	55.2	62.0	15.2	42	14	10 605	165	102	179	90	23	2500	48 170	20.1	1837

① DEFLECTIONS AT MID-SPAN DUE TO WEIGHT OF SLAB AND DIAPHRAGM. THE DEFLECTIONS SHOWN ARE FOR A SLAB (200 mm) AND HAUNCH (40 mm) WEIGHT OF:
12.58 kN/m FOR 2500 mm BEAM SPACING

THREE STEEL DIAPHRAGMS (2.22 kN) AT $\frac{1}{4}$ POINTS OF SPAN. FOR DIFFERENT SLAB AND DIAPHRAGM WEIGHTS, DEFLECTIONS WILL BE DIRECTLY PROPORTIONAL.

② DEFLECTIONS DUE TO THE COMBINED EFFECT OF CREEP DUE TO WEIGHT OF SLAB AND SHRINKAGE OF SLAB.
TOTAL BEAM DEFLECTIONS AT ℄ OF SPAN, Δ_D , DUE TO WEIGHT OF SLAB AND DIAPHRAGMS FOR DETAILING PURPOSE:
(A) $\Delta_D = \Delta_I + \Delta_T$ FOR SIMPLE SPAN.
(B) $\Delta_D = \Delta_I + \frac{3}{4}\Delta_T$ FOR END SPANS OF CONTINUOUS BRIDGE.
(C) $\Delta_D = \Delta_I + \frac{1}{2}\Delta_T$ FOR INTERIOR SPANS OF CONTINUOUS BRIDGE.

③ TOTAL INITIAL PRESTRESS IS BASED ON 72.6% f's, f's. = 1860 MPa AND As = 140.0 mm^2.

④ REQUIRES 27.5 MPa COMPRESSIVE STRENGTH FOR CAST-IN-PLACE SLAB CONCRETE.

BEAM NOTES:

THIS BEAM IS DESIGNED FOR AASHTO LIVE LOADS AS INDICATED IN ABOVE TABLE WITH AN ALLOWANCE OF 960 N PER SQUARE METER OF ROADWAY FOR FUTURE WEARING SURFACE.

HOLD DOWN POINTS FOR DEFLECTED STRANDS MAY BE MOVED TOWARD ENDS OF BEAM A DISTANCE OF 0.05 L MAXIMUM AT PRODUCER'S OPTION.

ALL PRESTRESSING STRANDS EXCEPT LIFTING LOOP STRANDS SHALL BE 15.2 mm NOMINAL DIAMETER (NOMINAL STEEL AREA = 140.0 mm^2) AND CONFORM TO ASTM A416 GRADE 270 LOW RELAXATION STRANDS. MINIMUM STRAND BREAKING STRENGTH SHALL BE 260.6 kN.

TOPS OF BEAMS ARE TO BE STRUCK OFF LEVEL AND INTENTIONALLY ROUGHENED TRANSVERSELY TO A FULL AMPLITUDE OF APPROXIMATELY 6 mm EXCEPT A 50 mm WIDE FINISH SHALL BE PROVIDED ON THE TOP EDGE ON ONE SIDE ONLY OF THE BEAM.

BEARINGS SHALL BE AS DETAILED ON OTHER DESIGN SHEETS.

BEAM TO BE USED IN BRIDGES MADE CONTINUOUS BY THE POURED IN PLACE FLOOR, ARE TO BE AT LEAST 28 DAYS OLD BEFORE THE FLOOR IS PLACED UNLESS A SHORTER CURING TIME IS APPROVED BY THE BRIDGE ENGINEER.

THE PORTIONS OF THE PRESTRESSED BEAM THAT ARE TO BE EMBEDDED IN THE ABUTMENT AND PIER DIAPHRAGMS SHALL BE ROUGHENED FOR A DISTANCE OF 250 mm FROM THE BEAM END BY SANDBLASTING OR OTHER APPROVED METHODS TO PROVIDE SUITABLE BOND BETWEEN THE BEAM AND THE DIAPHRAGM IN ACCORDANCE WITH ARTICLE 2403.14 OF THE SPECIFICATIONS.

UNLESS OTHERWISE NOTED THE BEAM IS TO BE INCREASED IN LENGTH BY .0005L TO COMPENSATE FOR ELASTIC SHORTENING, CREEP AND SHRINKAGE.

FOR TRANSPORTING, THE ALLOWABLE OVERHANG IS SHOWN IN THE "LIFTING LOOP AND OVERHANG TABLE"

THE CONTRACTOR SHALL ASSURE THE LATERAL STABILITY OF THE BEAM DURING HANDLING, TRANSPORTING AND ERECTION BY PROVIDING TEMPORARY BRACING AS NEEDED.

ALL DIMENSIONS ARE IN MILLIMETERS (mm) UNLESS OTHERWISE NOTED OR SHOWN.

HOLES MUST BE CAST IN THE WEB TO ACCOMMODATE THE STEEL DIAPHRAGM ATTACHMENTS AS DETAILED ON THE STEEL DIAPHRAGM DETAIL SHEET.

IF SOLE PLATE IS REQUIRED FOR BEARING, SOLE PLATE IS TO BE SET IN FORMS WHEN BEAM IS CAST AND FORMED OUT BELOW TO EXCLUDE CONCRETE AS DETAILED ON THE BEARING SHEET.

IF STUB ABUTMENTS ARE USED, ALL STRANDS AT THE END OF BEAM AT STUB ABUTMENTS SHALL BE CUT OFF REASONABLY FLUSH WITH THE CONCRETE.

MINIMUM CONCRETE f'c (AT 28 DAYS) AND MINIMUM f'ci AT RELEASE ARE LOCATED IN THE BTD4IM BEAM DATA TABLE ABOVE.

FOUR 15.2 mm DIAMETER STRANDS STRESSED TO NOT MORE THAN 20 kN EACH MAY BE USED IN LIEU OF BARS a1 AND a2 IN THE TOP FLANGE.

WHEN EXPANSION JOINTS ARE USED, CONCRETE SEALER SHALL BE APPLIED TO THE PRESTRESSED BEAM END SECTIONS. THE SEALING SHALL BE IN ACCORDANCE WITH MATERIALS I.M. 570 AND 491.12.

IF THE PRECAST PANEL OPTION IS ALLOWED AND USED FOR BRIDGE DECK FORMATION, THE BEAM STIRRUPS WILL NEED TO BE EXTENDED AND TOP FLANGE BEAM FINISH SHALL BE MODIFIED AS PER DETAILS ON THE PRECAST DECK PANEL SHEET.

LIFTING LOOP AND OVERHANG TABLE

BEAM	LIFTING LOOPS EACH END	# OF STRANDS PER LOOP	D	BEAM OVERHANG
BTD4IM	2	4	2820	4870

LIFTING LOOPS SHALL CARRY LOADS EQUALLY.

DESIGN STRESSES:

DESIGN STRESSES FOR THE FOLLOWING MATERIALS ARE TO BE IN ACCORDANCE WITH AASHTO LRFD BRIDGE DESIGN SPECIFICATIONS FOR HIGHWAY BRIDGES, SERIES OF 1998.
REINFORCING STEEL IN ACCORDANCE WITH SECTION 5, GRADE 400.
CONCRETE IN ACCORDANCE WITH SECTION 5.
PRESTRESSING STEEL IN ACCORDANCE WITH SECTION 5, GRADE 270.

SPECIFICATIONS:

CONSTRUCTION: STANDARD SPECIFICATIONS OF THE IOWA DEPARTMENT OF TRANSPORTATION, CURRENT SERIES, WITH CURRENT APPLICABLE SPECIAL PROVISIONS AND SUPPLEMENTAL SPECIFICATIONS.

DESIGN: AASHTO LRFD, SERIES OF 1998, WITH MINOR MODIFICATIONS.

NUMBER AND EXACT LOCATION OF COIL TIES TO BE AS DETAILED ON SPECIFIC BRIDGE DESIGN.

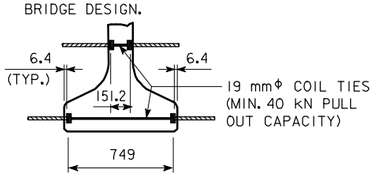

COIL TIE DETAIL

ΔΔ b2 AND b3 BARS TO BE EPOXY COATED
✱ b3 AND b4 BARS TO BE USED IN PAIRS

REINFORCING BAR LIST

	BEAM BAR	SIZE	SHAPE	BTD4IM NO.	LENGTH
	a1	16		12	9540
	a2	16		12	12 190
	b1	16		111	2830
ΔΔ	b2	16		111	1650
ΔΔ ✱	b3	19		36	1750
✱	b4	19		24	1550
	c1	13		179	780
	d1	13		135	1930
	e1	13		26	950
	h1	13		6	2420

BENT BAR DETAILS

NOTE: ALL BAR DIMENSIONS ARE OUT TO OUT
D = PIN DIAMETER FOR BENDING (UNLESS OTHERWISE SHOWN)
#13 BAR D= 50
#16 BAR D= 65
#19 BAR D= 115

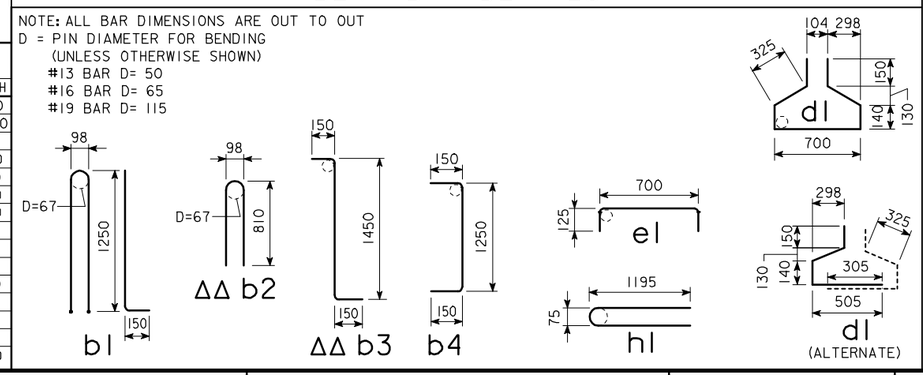

BTD4IM BEAM DETAILS

IOWA DEPARTMENT OF TRANSPORTATION - HIGHWAY DIVISION
DESIGN SHEET NO. ____ OF ____ FILE NO. _____ DESIGN NO. _____

HMBT4748.SOI - THIS SHEET ISSUED 05-04.

DESIGN TEAM	BULB TEE "D" BEAM - 41 150 mm SPAN (1 OF 2)	STANDARD SHEET M4748	COUNTY	PROJECT NUMBER	SHEET NUMBER

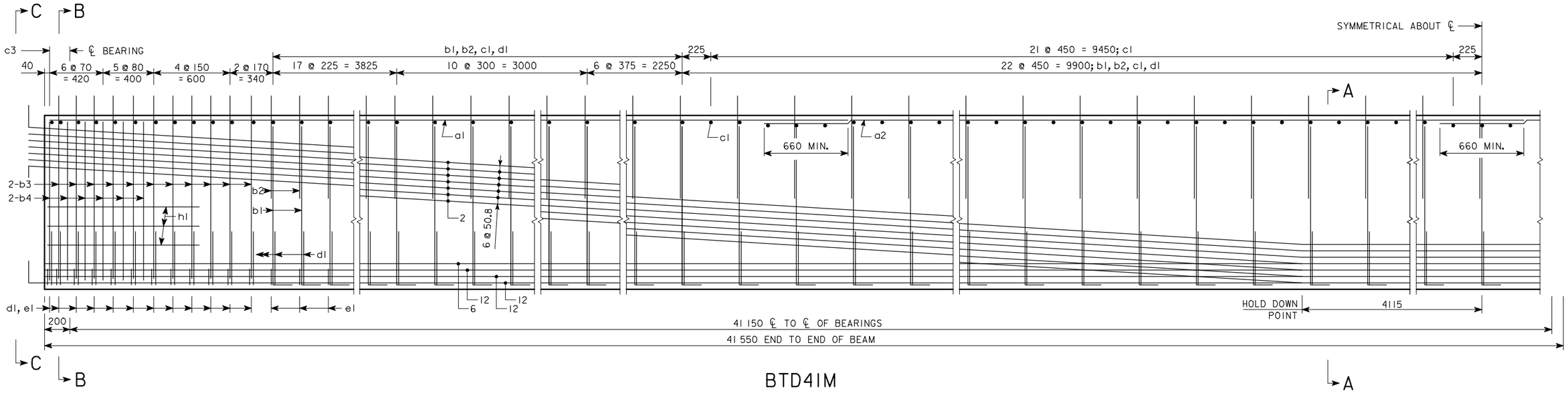

BTD41M

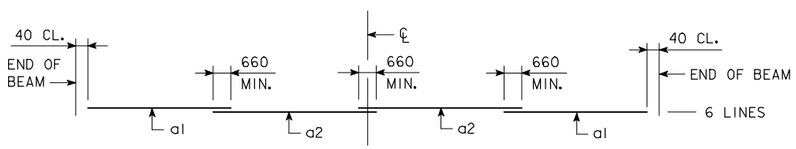

TOP FLANGE LONGITUDINAL BAR LAYOUT

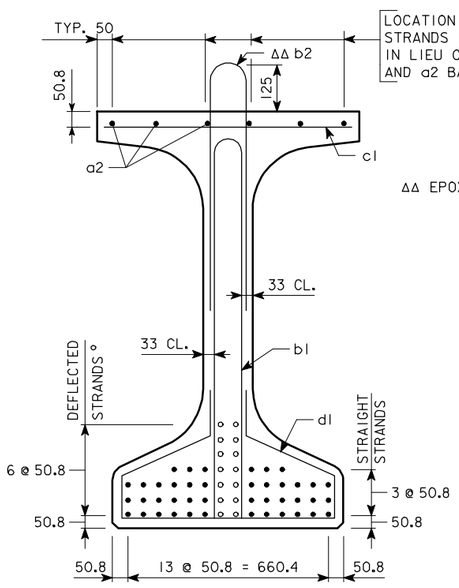

SECTION A-A

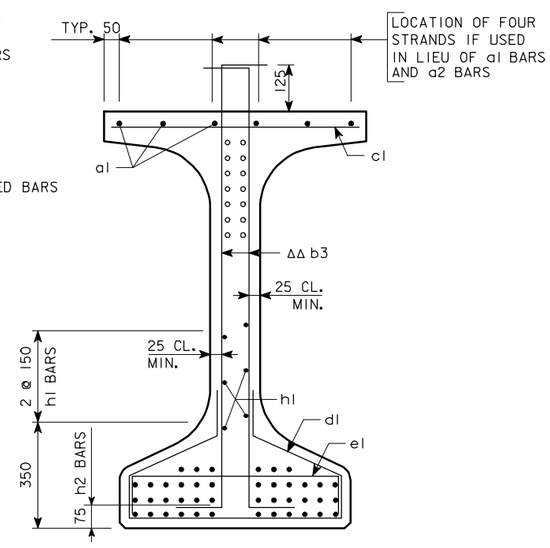

SECTION B-B

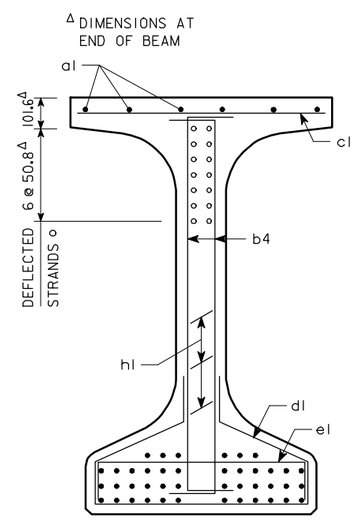

SECTION C-C

AREA = 483 090 mm²
$\bar{y}_b$ = 626 mm
I = 118 984 000 000 mm⁴

BEAM SECTION PROPERTIES

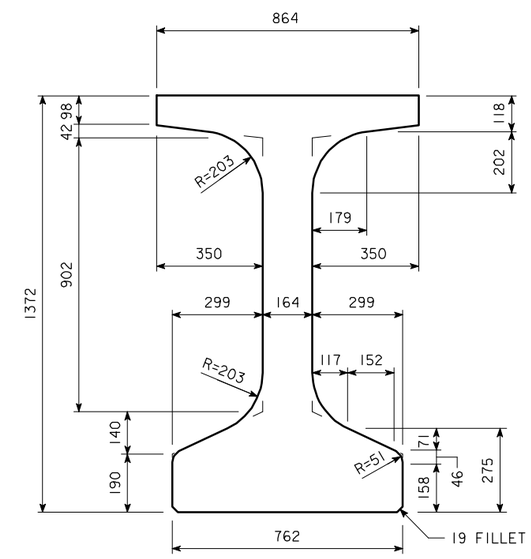

BTD BEAM CROSS SECTION

BTD41M BEAM DETAILS

IOWA DEPARTMENT OF TRANSPORTATION - HIGHWAY DIVISION

DESIGN SHEET NO. ____ OF ____ FILE NO. _____ DESIGN NO. _____

DESIGN TEAM	BULB TEE "D" BEAM - 41 150 mm SPAN (2 OF 2)	STANDARD SHEET M4748	COUNTY	PROJECT NUMBER	SHEET NUMBER

HMBT4748.S02 - THIS SHEET ISSUED 05-04.

10-FEB-2006 14:19 ajeffer W:\Projects\0000006002\BRFinal\MetricBeams.dgn mbtd4748s2