IOWA DOT
Highway Division

J40–14 CONTINUOUS CONCRETE SLAB BRIDGE STANDARDS

INDEX FOR J40-14 STANDARDS:

J40-1-14	INDEX, GENERAL NOTES & GENERAL INFORMATION
J40-2-14	SUPERSTRUCTURE DETAILS 70'-0 BRIDGE
J40-3-14	SUPERSTRUCTURE DETAILS 70'-0 BRIDGE
J40-4-14	SUPERSTRUCTURE DETAILS 80'-0 BRIDGE
J40-5-14	SUPERSTRUCTURE DETAILS 80'-0 BRIDGE
J40-6-14	SUPERSTRUCTURE DETAILS 90'-0 BRIDGE
J40-7-14	SUPERSTRUCTURE DETAILS 90'-0 BRIDGE
J40-8-14	SUPERSTRUCTURE DETAILS 100'-0 BRIDGE
J40-9-14	SUPERSTRUCTURE DETAILS 100'-0 BRIDGE
J40-10-14	SUPERSTRUCTURE DETAILS 110'-0 BRIDGE
J40-11-14	SUPERSTRUCTURE DETAILS 110'-0 BRIDGE
J40-12-14	SUPERSTRUCTURE DETAILS 120'-0 BRIDGE
J40-13-14	SUPERSTRUCTURE DETAILS 120'-0 BRIDGE
J40-14-14	SUPERSTRUCTURE DETAILS 130'-0 BRIDGE
J40-15-14	SUPERSTRUCTURE DETAILS 130'-0 BRIDGE
J40-16-14	SUPERSTRUCTURE DETAILS 140'-0 BRIDGE
J40-17-14	SUPERSTRUCTURE DETAILS 140'-0 BRIDGE
J40-18-14	SUPERSTRUCTURE DETAILS 150'-0 BRIDGE
J40-19-14	SUPERSTRUCTURE DETAILS 150'-0 BRIDGE
J40-20-14	SUPERSTRUCTURE DETAILS ALL BRIDGES
J40-21-14	SUPERSTRUCTURE DETAILS ALL BRIDGES 0° SKEW
J40-22-14	SUPERSTRUCTURE DETAILS ALL BRIDGES 15° SKEW
J40-23-14	SUPERSTRUCTURE DETAILS ALL BRIDGES 30° SKEW
J40-24-14	SUPERSTRUCTURE DETAILS ALL BRIDGES 45° SKEW
J40-25-14	MONOLITHIC PIER CAP DETAILS ALL BRIDGES
J40-26-14	MONOLITHIC PIER CAP DETAILS ALL BRIDGES
J40-27-14	NON-MONOLITHIC PIER CAP DETAILS ALL BRIDGES
J40-28-14	NON-MONOLITHIC PIER CAP DETAILS ALL BRIDGES
J40-29-14	NON-MONOLITHIC PIER CAP DETAILS ALL BRIDGES
J40-30-14	ABUTMENT DETAILS 0° SKEW - TIMBER PILING
J40-31-14	ABUTMENT DETAILS 0° SKEW - TIMBER PILING
J40-32-14	ABUTMENT DETAILS 15° SKEW - TIMBER PILING
J40-33-14	ABUTMENT DETAILS 15° SKEW - TIMBER PILING
J40-34-14	ABUTMENT DETAILS 30° SKEW - TIMBER PILING
J40-35-14	ABUTMENT DETAILS 30° SKEW - TIMBER PILING
J40-36-14	ABUTMENT DETAILS 45° SKEW - TIMBER PILING
J40-37-14	ABUTMENT DETAILS 45° SKEW - TIMBER PILING
J40-38-14	ABUTMENT DETAILS - TIMBER PILING
J40-39-14	ABUTMENT DETAILS 0° SKEW - STEEL PILING
J40-40-14	ABUTMENT DETAILS 15° SKEW - STEEL PILING
J40-41-14	ABUTMENT DETAILS 30° SKEW - STEEL PILING
J40-42-14	ABUTMENT DETAILS 45° SKEW - STEEL PILING
J40-43-14	ABUTMENT DETAILS 45° SKEW - STEEL PILING
J40-44-14	ABUTMENT DETAILS - STEEL PILING
J40-45-14	BARRIER RAIL DETAILS
J40-46-14	BARRIER RAIL DETAILS
J40-47-14	BARRIER RAIL END SECTION
J40-48-14	OPEN BARRIER RAIL DETAILS
J40-49-14	OPEN BARRIER RAIL DETAILS
J40-50-14	SUBDRAIN DETAILS
J40-51-14	WING ARMORING & MACADAM STONE DETAILS
J40-52-14	ABUTMENT BACKFILL DETAILS - 0° SKEWS
J40-53-14	ABUTMENT BACKFILL DETAILS - 15°, 30°, & 45° SKEWS

GENERAL NOTES:

THE J40-14 BRIDGE STANDARDS, IF PROPERLY USED, PROVIDE THE STRUCTURAL PLANS NECESSARY TO CONSTRUCT THREE SPAN 40' ROADWAY CONTINUOUS CONCRETE SLAB BRIDGES WITH LENGTHS OF 70'-0, 80'-0, 90'-0, 100'-0, 110'-0, 120'-0, 130'-0, 140'-0 AND 150'-0.

THESE BRIDGES MAY BE BUILT ON A 0°, 15°, 30° OR 45° SKEW. THESE PLANS SHOW THE BRIDGES SKEWED IN ONE DIRECTION, BUT ALL DIMENSIONS AND DETAILS WOULD BE THE SAME FOR THE OPPOSITE SKEW.

THESE STANDARDS GIVE MOST OF THE INFORMATION NECESSARY TO BUILD THESE BRIDGES. HOWEVER, THE FOLLOWING ADDITIONAL INFORMATION IS REQUIRED FOR USE ON PRIMARY ROUTES. FOR SECONDARY ROUTES THE ENGINEER MAY NOT REQUIRE ALL SHEETS TO BE PROVIDED:

1. TITLE SHEET WITH ENGINEERS SEAL
2. ESTIMATED QUANTITIES TOTALS INCLUDING CLASS 20 EXCAVATION FOR BRIDGE
3. SITUATION PLAN LAYOUT OF BRIDGE
4. TOP OF SLAB ELEVATIONS LAYOUT
5. BOTTOM OF ABUTMENT FOOTING ELEVATIONS
6. BOTTOM OF PIER CAP ELEVATIONS
7. PILING DESIGN INFORMATION
8. SLOPE PROTECTION LAYOUT IF NEEDED
9. CONDUIT LAYOUT
10. LIGHTING LAYOUT IF NEEDED

FOR CLARITY, MOST SECTIONS SHOWN ON THE FOLLOWING SHEETS ARE DRAWN WITH BARRIER RAIL ONLY. THESE SECTIONS WILL BE IDENTICAL FOR OPEN RAIL DESIGN WITH ANY MODIFICATIONS SHOWN ON SHEET J40-48-14 AND J40-49-14.

THESE BRIDGES ARE DESIGNED FOR HL93 LOADING PLUS 20 LBS. PER SQ. FT. OF ROADWAY FOR FUTURE WEARING SURFACE. CONTROL OF CRACKING BY DISTRIBUTION OF REINFORCEMENT FOR SLAB DESIGN BASED ON PRE LRFD 2005 INTERIMS.

NOTE THAT WHEN APPROACH PAVEMENT IS TO BE PLACED, THE TEMPORARY PAVING BLOCKS SHALL BE REMOVED AND A PROPER JOINT FOR EXPANSION SHALL BE PROVIDED BETWEEN THE BRIDGE AND THE APPROACH PAVING.

THE FLOOR SLAB AS SHOWN INCLUDES $\frac{1}{2}$" INTEGRAL WEARING SURFACE.

THE ABUTMENTS FOR THESE BRIDGES ARE BUILT INTEGRAL WITH THE SUPERSTRUCTURE. THEREFORE, IT IS IMPORTANT THAT A PROPER JOINT FOR EXPANSION BE PROVIDED BETWEEN THE BRIDGE AND APPROACH PAVING, WHEN APPROACH PAVING IS NEEDED.

THE ABUTMENT DESIGN UTILIZED ON THESE BRIDGES RESTRICTS THEIR USE IN THE FOLLOWING MANNER:

(1) THESE BRIDGES ARE NOT TO BE USED WHEN POINT BEARING FOR THE ABUTMENT STEEL PILING WOULD BE OBTAINED ON ROCK AT A DISTANCE LESS THAN 15 FEET FROM THE BOTTOM OF FOOTING.

(2) FOR THE 140 FOOT AND 150 FOOT LONG BRIDGES THE ABUTMENT PILING ARE TO BE DRIVEN THROUGH OVERSIZED HOLES PREBORED TO A MINIMUM OF 10 FEET BELOW THE BELOW THE BOTTOM OF FOOTING. THE PREBORED HOLES SHALL BE IN ACCORDANCE WITH SECTION 2501.03, Q OF THE STANDARD SPECIFICATIONS. THE ELEVATION OF THE BOTTOM OF THE PREBORED HOLE SHALL BE SHOWN ON THE PLANS.

(3) IF ROCK IS ENCOUNTERED LESS THAN 5 FOOT BELOW THE PREBORED HOLES, A SPECIAL ANALYSIS WILL BE REQUIRED. WHEN PREBORING IS NOT REQUIRED FOR THE ABUTMENT FOOTING AND ROCK IS ENCOUNTERED LESS THAN 10 FOOT BELOW THE BOTTOM OF ABUTMENT FOOTING, A SPECIAL ANALYSIS WILL BE REQUIRED.

THE PIERS AND ABUTMENTS FOR THESE STANDARDS HAVE BEEN DESIGNED FOR THE USE OF BOTH FRICTION AND POINT BEARING PILES. IT IS NECESSARY THAT THE TYPE AND LENGTH FOR BOTH THE ABUTMENT AND PIER PILES BE DESIGNATED ON THE FRONT SHEET OF THE PLANS.

THE INTEGRAL ABUTMENTS AND PILE BENTS FOR THESE J40 STANDARDS HAVE BEEN DESIGNED FOR THE USE OF VARIOUS TYPES OF PILE FOOTINGS AS FOLLOWS.

- INTEGRAL ABUTMENTS: TIMBER PILES OR HP10x42 PILES AT BRIDGE DESIGN MANUAL(BDM) ARTICLE 6.2.6.1 STRUCTURAL RESISTANCE LEVEL-1 (SRL-1)

- PILE BENTS: STANDARD CONCRETE-FILLED STEEL PIPE PILES (P10L), STANDARD PRESTRESSED CONCRETE PILES (P10L), OR STANDARD H-PILES (P10L AND SRL-1)

BECAUSE THESE BRIDGE STANDARDS HAVE BEEN REVISED FOR LRFD BASED ON 2012-COMPLETED IOWA STATE UNIVERSITY RESEARCH, FOR PILE FOUNDATIONS THE DESIGNER WILL NEED TO DETERMINE THE CONSTRUCTION CONTROL METHOD, CONTRACT LENGTH, AND DRIVING TARGET AND GIVE THAT INFORMATION ON THE FRONT SHEET OF THE PLANS. BRIDGE DESIGN MANUAL CADD NOTES E177, E718, E719, E818, AND E819 ARE APPROPRIATE FOR THAT PURPOSE. THE NOTES, AS WELL AS THE BRIDGE DESIGN MANUAL AND DESIGN EXAMPLES, ARE AVAILABLE ON THE OFFICE OF BRIDGES AND STRUCTURES WEB SITE: HTTP://WWW.IOWADOT.GOV/BRIDGE/INDEX.HTM.

STRUCTURAL RESISTANCE LEVEL-1 (SRL-1) REPLACES THE 50 TON STEEL PILE DESIGNATION.

FOR MORE INFORMATION ON SRL-1, SEE THE BRIDGE DESIGN MANUAL, LOCATED ON THE IOWA DEPARTMENT OF TRANSPORTATION, OFFICE OF BRIDGES AND STRUCTURES WEB SITE.

FOR PIERS SUBJECT TO SCOUR THE DESIGN BEARING SHALL BE OBTAINED BELOW SCOUR ELEVATION. SCOUR ELEVATION SHALL BE SHOWN ON THE FRONT SHEET.

KEYWAY DIMENSIONS SHOWN ON THE PLANS ARE BASED ON NOMINAL DIMENSIONS UNLESS STATED OTHERWISE. IN ADDITION, THE BEVEL USED ON THE KEYWAY SHALL BE LIMITED TO A MAXIMUM OF 10 DEGREES FROM VERTICAL.

THESE BRIDGE PLANS LABEL ALL REINFORCING STEEL WITH ENGLISH NOTATION (5a1 IS $\frac{5}{8}$ INCH DIAMETER BAR). ENGLISH REINFORCING STEEL RECEIVED IN THE FIELD MAY DISPLAY THE FOLLOWING "BAR DESIGNATION". THE "BAR DESIGNATION" IS THE STAMPED IMPRESSION ON THE REINFORCING BARS, AND IS EQUIVALENT TO THE BAR DIAMETER IN MILLIMETERS.

ENGLISH SIZE	3	4	5	6	7	8	9	10	11
BAR DESIGNATION	10	13	16	19	22	25	29	32	36

THE BR-205 DOUBLE REINFORCED 12" APPROACH STANDARD ROAD PLAN SHALL BE USED WITH THE J40 STANDARDS. THIS STANDARD TIES THE APPROACHES TO THE INTEGRAL (MOVABLE) ABUTMENT, AND PROVIDES EXPANSION MOVEMENT (CF JOINT) AT THE END OF THE FIRST APPROACH SLAB PANEL.

ALL REINFORCING BARS AND BARS NOTED AS DOWELS SUPPLIED FOR THIS STRUCTURE SHALL BE DEFORMED REINFORCEMENT UNLESS OTHERWISE NOTED OR SHOWN.

SPECIFICATIONS:

DESIGN: AASHTO LRFD, SERIES OF 2004 WITH INTERIM 2005.

CONSTRUCTION: IOWA DEPARTMENT OF TRANSPORTATION STANDARD SPECIFICATIONS FOR HIGHWAY AND BRIDGE CONSTRUCTION, SERIES 2012, PLUS APPLICABLE GENERAL SUPPLEMENTAL SPECIFICATIONS, DEVELOPMENTAL SPECIFICATIONS, SUPPLEMENTAL SPECIFICATIONS AND SPECIAL PROVISIONS SHALL APPLY TO CONSTRUCTION WORK ON THIS PROJECT.

DESIGN STRESSES:

DESIGN STRESSES FOR THE FOLLOWING MATERIALS ARE IN ACCORDANCE WITH THE AASHTO LRFD BRIDGE DESIGN SPECIFICATIONS, 3rd Ed, SERIES OF 2004.
REINFORCING STEEL IN ACCORDANCE WITH LRFD AASHTO SECTION 5, GRADE 60.
CONCRETE IN ACCORDANCE WITH LRFD AASHTO SECTION 5, f'c = 3,500 PSI,
STRUCTURAL STEEL IN ACCORDANCE WITH LRFD AASHTO SECTION 6. ASTM A709 GRADE 36 OR GRADE 50 (AASHTO M270 GRADE 36 OR GRADE 50).
n = 9 FOR TENSION STEEL
2n = 18 FOR COMPRESSION STEEL
HL-93 LIVE LOAD PLUS 20 LBS. PER SQ. FT. FOR FUTURE WEARING SURFACE.
END SPAN LENGTH IS USED TO CALCULATE EQUIVALENT WIDTH IN LIVE LOAD DISTRIBUTION.
SIX FOOT OF APPROACH SLAB DEAD & LIVE LOAD INCLUDED IN ABUTMENT LOADS.
CONTROL OF CRACKING BY DISTRIBUTION OF REINFORCEMENT FOR SLAB DESIGN BASED ON PRE 2005 LRFD INTERMS.

03-2016
LATEST REVISION DATE

APPROVED BY BRIDGE ENGINEER

IOWADOT Highway Division

STANDARD DESIGN - 40' ROADWAY, 3 SPAN BRIDGES

CONTINUOUS CONCRETE SLAB BRIDGES

JULY, 2014

INDEX AND GENERAL NOTES | J40-01-14

REVISED 03-2016 - REVISION FOR ADDITION OF PAVING NOTCH BAR AND REFERENCE TO BR-205 STANDARD ROAD PLAN.

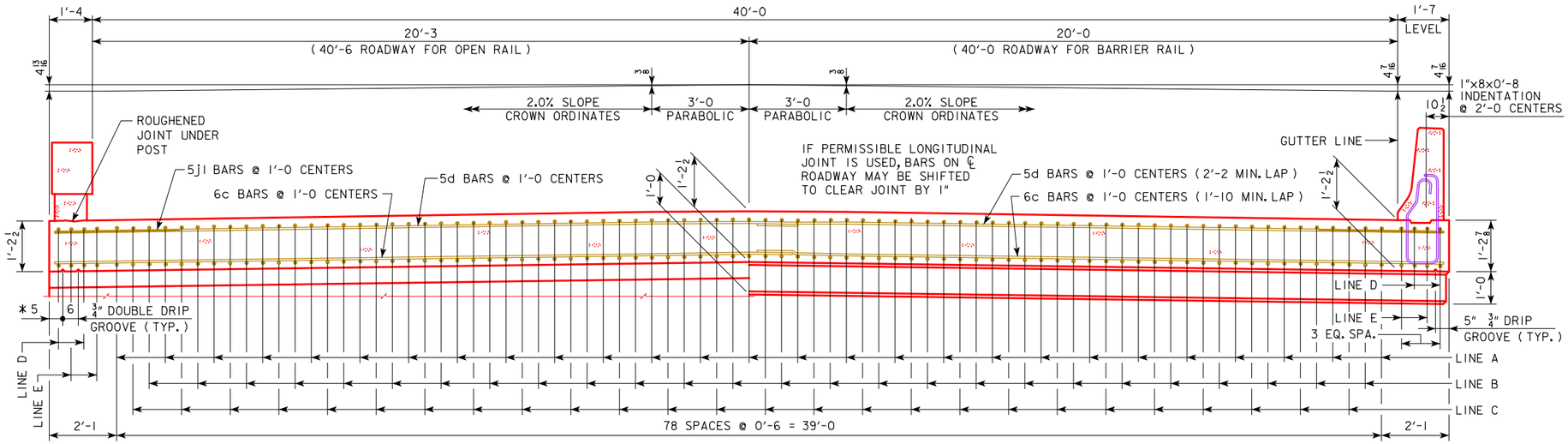

* NOTE: DOUBLE DRIP GROOVES FOR OPEN RAIL OPTION ONLY.

HALF SECTION NEAR ABUTMENT

SLAB CROSS-SECTIONAL AREA FOR OPEN RAIL = 52.16 SQ. FT.

HALF SECTION NEAR PIER

SLAB CROSS-SECTIONAL AREA FOR BARRIER RAIL = 52.21 SQ. FT.

NOTE: TOP LONGITUDINAL REINFORCING STEEL IS TO BE PARALLEL TO AND 2½" CLEAR BELOW TOP OF SLAB. BOTTOM LONGITUDINAL REINFORCING STEEL IS TO BE PARALLEL TO AND 1½" CLEAR ABOVE BOTTOM OF SLAB. REINFORCING STEEL IS TO BE SECURELY WIRED IN PLACE AND ADEQUATELY SUPPORTED ON BAR CHAIRS BEFORE CONCRETE IS POURED. I.M. 451.01 REQUIREMENTS SHALL APPLY FOR BAR CHAIRS.

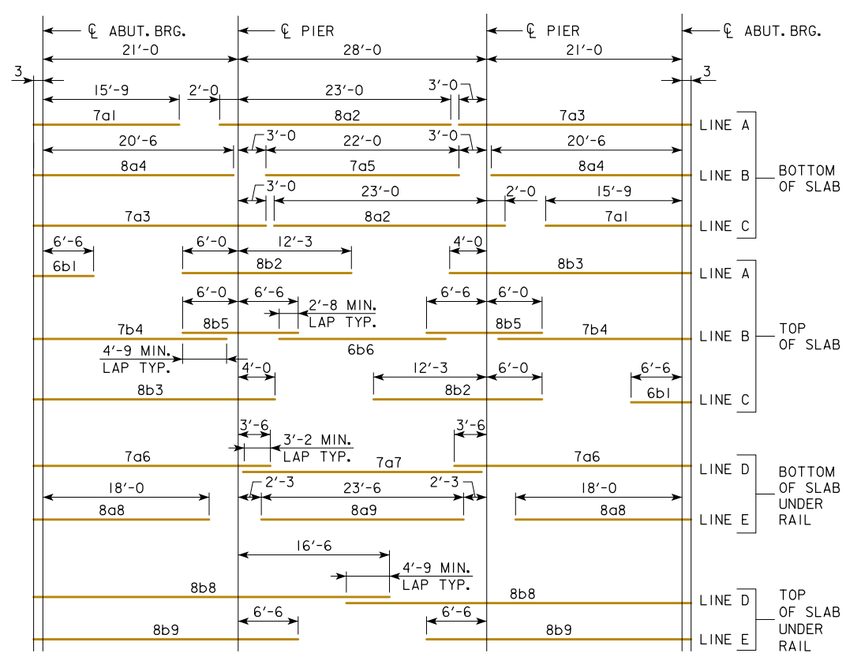

PLACEMENT FOR LONGITUDINAL REINFORCEMENT

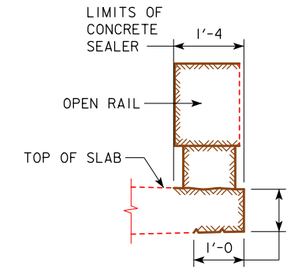

CONCRETE SEALER LIMITS FOR OPEN RAILS

CONCRETE SEALER SHALL BE APPLIED TO BOTH SIDES OF BRIDGE SLAB ON THE TOP, EDGE OF SLAB AND UNDER THE SLAB. THE CONCRETE SEALER SHALL ALSO BE APPLIED TO THE OPEN RAIL ON THE TOP, TRAFFIC FACE SIDE, BOTTOM OF RAIL, AND ON ALL SIDES OF THE OPEN RAIL POSTS.

THE CONCRETE SEALER LIMITS ARE SHOWN IN THE DETAIL AND SHALL APPLY TO THE FULL LENGTH OF BRIDGE. CONCRETE SEALER SHALL BE APPLIED IN ACCORDANCE WITH ARTICLE 2403.03, P, 3 OF THE STANDARD SPECIFICATIONS.

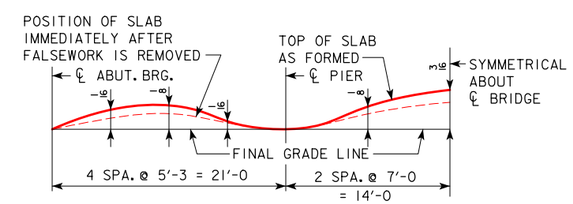

FORM CAMBER DIAGRAM

THIS DIAGRAM SHOWS THE FORM CAMBER REQUIRED TO COMPENSATE FOR THE ANTICIPATED ULTIMATE DEAD LOAD DEFLECTION. THE ABOVE DIMENSIONS DO NOT INCLUDE ANY ALLOWANCE FOR FORM DEFLECTION OR FALSEWORK SETTLEMENT.

LATEST REVISION DATE

APPROVED BY BRIDGE ENGINEER

IOWA DOT Highway Division

STANDARD DESIGN - 40' ROADWAY, 3 SPAN BRIDGES

CONTINUOUS CONCRETE SLAB BRIDGES

JULY, 2014

SUPERSTRUCTURE DETAILS
70'-0 BRIDGE

J40-02-14

BILL OF REINFORCING STEEL FOR SUPERSTRUCTURE - 70' BRIDGE

LOCATION \ SKEW	SHAPE	BAR	0° NO.	0° LENGTH	0° WEIGHT	15° NO.	15° LENGTH	15° WEIGHT	30° NO.	30° LENGTH	30° WEIGHT	45° NO.	45° LENGTH	45° WEIGHT
SLAB LONGITUDINAL BOTTOM		7a1	53	16'-0	1734	53	16'-0	1734	53	16'-0	1734	53	16'-0	1734
SLAB LONGITUDINAL BOTTOM		8a2	53	25'-0	3538	53	25'-0	3538	53	25'-0	3538	53	25'-0	3538
SLAB LONGITUDINAL BOTTOM		7a3	53	24'-3	2628	53	24'-3	2628	53	24'-3	2628	53	24'-3	2628
SLAB LONGITUDINAL BOTTOM		8a4	52	20'-9	2881	52	20'-9	2881	52	20'-9	2881	52	20'-9	2881
SLAB LONGITUDINAL BOTTOM		7a5	26	22'-0	1170	26	22'-0	1170	26	22'-0	1170	26	22'-0	1170
SLAB LONGITUDINAL BOTTOM, AT RAIL		7a6	8	24'-9	405	8	24'-9	405	8	24'-9	405	8	24'-9	405
SLAB LONGITUDINAL BOTTOM, AT RAIL		7a7	4	27'-4	224	4	27'-4	224	4	27'-4	224	4	27'-4	224
SLAB LONGITUDINAL BOTTOM, AT RAIL		8a8	8	18'-3	390	8	18'-3	390	8	18'-3	390	8	18'-3	390
SLAB LONGITUDINAL BOTTOM, AT RAIL		8a9	4	23'-6	251	4	23'-6	251	4	23'-6	251	4	23'-6	251
SLAB LONGITUDINAL TOP		6b1	53	9'-0	717	53	9'-0	717	53	9'-0	717	53	9'-0	717
SLAB LONGITUDINAL TOP		8b2	53	18'-3	2583	53	18'-3	2583	53	18'-3	2583	53	18'-3	2583
SLAB LONGITUDINAL TOP		8b3	53	27'-6	3892	53	27'-6	3892	53	27'-6	3892	53	27'-6	3892
SLAB LONGITUDINAL TOP		7b4	52	22'-3	2365	52	22'-3	2365	52	22'-3	2365	52	22'-3	2365
SLAB LONGITUDINAL TOP		8b5	52	12'-6	1736	52	12'-6	1736	52	12'-6	1736	52	12'-6	1736
SLAB LONGITUDINAL TOP		6b6	26	20'-4	795	26	20'-4	795	26	20'-4	795	26	20'-4	795
SLAB LONGITUDINAL TOP, AT RAIL		8b8	8	40'-0	855	8	40'-0	855	8	40'-0	855	8	40'-0	855
SLAB LONGITUDINAL TOP, AT RAIL		8b9	8	30'-0	641	8	30'-0	641	8	30'-0	641	8	30'-0	641
SLAB TRANSVERSE BOTTOM		6c1	67	23'-5	2357	67	24'-3	2441	58	23'-5	2040	48	23'-5	1689
SLAB TRANSVERSE BOTTOM		6c2	67	21'-3	2139	67	22'-0	2214	59	21'-3	1884	51	21'-3	1628
SLAB TRANSVERSE ENDS, BOTTOM		6c3	-	-	-	-	-	-	12	VARIES	223	20	VARIES	411
SLAB TRANSVERSE ENDS, BOTTOM		6c4	-	-	-	-	-	-	11	VARIES	219	20	VARIES	386
SLAB TRANSVERSE ENDS, BOTTOM		6c5	-	-	-	-	-	-	11	VARIES	176	18	VARIES	302
SLAB TRANSVERSE ENDS, BOTTOM		6c6	-	-	-	-	-	-	11	VARIES	190	17	VARIES	311
SLAB TRANSVERSE TOP		5d1	67	23'-9	1660	67	24'-7	1718	58	23'-9	1437	48	23'-9	1190
SLAB TRANSVERSE TOP		5d2	67	21'-3	1485	67	22'-0	1538	59	21'-3	1308	51	21'-3	1131
SLAB TRANSVERSE ENDS, TOP		5d3	-	-	-	-	-	-	12	VARIES	155	20	VARIES	286
SLAB TRANSVERSE ENDS, TOP		5d4	-	-	-	-	-	-	11	VARIES	152	20	VARIES	268
SLAB TRANSVERSE ENDS, TOP		5d5	-	-	-	-	-	-	11	VARIES	122	18	VARIES	210
SLAB TRANSVERSE ENDS, TOP		5d6	-	-	-	-	-	-	11	VARIES	132	17	VARIES	216
SLAB, TRANSVERSE AT ABUTMENT		8e1	18	26'-4	1266	18	27'-1	1302	18	29'-6	1418	18	34'-8	1667
SLAB, TRANSVERSE AT ABUTMENT		8e2	18	21'-4	1026	18	22'-0	1058	18	24'-5	1174	18	29'-7	1422
SLAB, HAIRPINS, AT ABUTMENT		6e3	92	5'-0	691	92	5'-1	703	92	5'-5	749	92	6'-1	841
SLAB, DIAGONALS, AT ABUTMENT		6e4	92	5'-11	818	92	5'-11	818	92	5'-11	818	92	5'-11	818
PIER CAP HOOPS		5h1	72	6'-11	520	72	6'-11	520	72	6'-11	520	108	6'-11	780
PIER CAP ENDS		8h2	4	14'-5	154	4	14'-5	154	4	14'-5	154	4	14'-5	154
PIER CAP, BOTTOM LONGITUDINAL		8h3	8	25'-5	543	8	26'-7	568	8	29'-4	627	8	35'-0	748
PIER CAP, BOTTOM LONGITUDINAL		8h4	8	19'-11	426	8	20'-3	433	8	22'-2	474	8	26'-10	574
PIER CAP, TOP LONGITUDINAL		8h5	4	26'-2	280	4	27'-5	293	4	30'-4	324	4	36'-1	386
PIER CAP, TOP LONGITUDINAL		8h6	4	21'-5	229	4	21'-10	234	4	23'-11	256	4	28'-8	307
TOP OF SLAB, TRANSVERSE, AT RAIL		5j1	132	8'-6	1171	132	8'-6	1171	122	8'-6	1082	116	8'-6	1029
WING, VERTICAL		5m1	40	4'-5	185	40	4'-5	185	40	4'-5	185	40	4'-5	185
WING, HORIZONTAL BACK FACE		5n1	24	6'-8	167	24	6'-8	167	24	6'-8	167	24	6'-8	167
WING, HORIZONTAL TRAFFIC FACE		5n3	24	6'-9	169	24	6'-9	169	24	6'-9	169	24	6'-9	169
SUB EPOXY COATED TOTAL - LBS.					42,091			42,491			42,960			44,080
BARRIER RAIL - SEE LIST ON RAIL SHEET J40-46-14					3220			3220			3220			3220
OPEN RAIL - SEE LIST ON RAIL SHEET J40-49-14					3266			3266			3266			3266
EPOXY COATED RAIL TOTAL - LBS. WITH MONOLITHIC PIER CAP		WITH BARRIER RAIL			45,311			45,711			46,180			47,300
		WITH OPEN RAIL			45,357			45,757			46,226			47,346
EPOXY COATED RAIL TOTAL - LBS. WITH NON-MONOLITHIC PIER CAP		WITH BARRIER RAIL			43,159			43,509			43,825			44,351
SAME AS ABOVE EXCEPT ALL "h" BARS DELETED		WITH OPEN RAIL			43,205			43,555			43,871			44,397
STAINLESS STEEL RAIL TOTAL - LBS.		WITH BARRIER RAIL			1737			1737			1737			1737
		WITH OPEN RAIL			1834			1834			1834			1834

ESTIMATED QUANTITIES FOR SUPERSTRUCTURE - 70' BRIDGE

ITEM		SKEW	WITH MONOLITHIC PIER CAP 0°	15°	30°	45°	WITH NON-MONOLITHIC PIER CAP 0°	15°	30°	45°
WITH BARRIER RAIL	* STRUCTURAL CONCRETE (BRIDGE)	C.Y.	168.1	169.1	172.7	180.3	162.1	162.9	165.8	171.9
	REINF. STEEL EPOXY COATED	LBS.	45,311	45,711	46,180	47,300	43,159	43,509	43,825	44,351
	Δ REINF. STEEL STAINLESS STEEL	LBS.	1960	1960	1960	1960	1960	1960	1960	1960
CONCRETE BARRIER OR OPEN RAIL		LIN. FT.	162.0	162.2	162.9	164.5	162.0	162.2	162.9	164.5
WITH OPEN RAIL	* STRUCTURAL CONCRETE (BRIDGE)	C.Y.	168.0	169.0	172.5	180.2	161.9	162.8	165.6	171.8
	REINF. STEEL EPOXY COATED	LBS.	45,357	45,757	46,226	47,346	43,205	43,555	43,871	44,397
	Δ REINF. STEEL STAINLESS STEEL	LBS.	2057	2057	2057	2057	2057	2057	2057	2057

* INCLUDES 4 WINGS @ 0.68 C.Y. EACH; EXCLUDES RAIL CONCRETE.
Δ INCLUDES ABUTMENT PAVING NOTCH BAR WEIGHT.

BENT BAR DETAILS

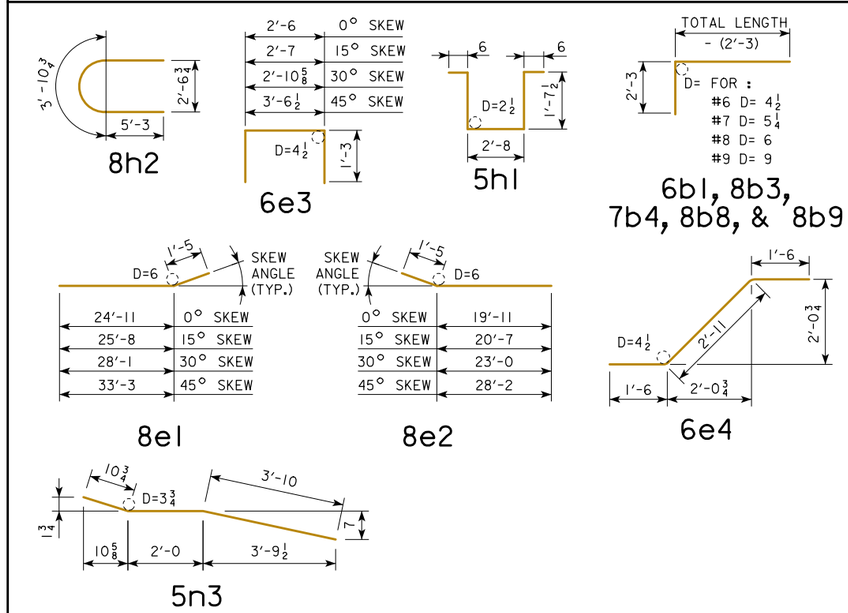

NOTE: ALL DIMENSIONS ARE OUT TO OUT. D = PIN DIAMETER.

STAINLESS STEEL REINFORCING FOR SUPERSTRUCTURE - BRIDGE

LOCATION \ ALL SKEWS	SHAPE	BAR	NO.	LENGTH	WEIGHT
ABUTMENT PAVING NOTCH BAR		8u1	40	2'-1	223

8u1 BARS SHALL BE PAID FOR UNDER THE BID ITEM "REINFORCING STEEL, STAINLESS STEEL". WEIGHT = LBS.

NOTES:
ALL BARRIER RAIL REINFORCING STEEL IS TO BE EITHER EPOXY COATED OR STAINLESS STEEL AS SHOWN OR NOTED. THE STAINLESS STEEL REINFORCING STEEL SHALL BE DEFORMED BAR GRADE 60 MEETING THE REQUIREMENTS OF MATERIALS I.M.452.

ALL OTHER REINFORCING STEEL IS TO BE EPOXY COATED.

THE TRANSVERSE REBARS ARE DETAILED WITH A SPLICE LAP. AT THE CONTRACTOR'S OPTION, THIS LAP MAY BE ELIMINATED BY FURNISHING FULL LENGTH BARS WITH NO REDUCTION IN PAY WEIGHT FOR SAME.

REVISED 09-14 - CHANGED REFERENCE TO THE BARRIER RAIL & OPEN RAIL TO THE J40-14 STANDARDS INSTEAD OF J40-06 STANDARDS.
REVISED 03-2016 - REVISION FOR ADDITION OF PAVING NOTCH BAR 8u1.
REVISED 04-2016 - REVISION TO INCLUDE PAVING NOTCH BAR 8u1 WEIGHT IN ESTIMATED QUANTITIES TABLE.

04-2016
LATEST REVISION DATE

APPROVED BY BRIDGE ENGINEER

IOWA DOT Highway Division

STANDARD DESIGN - 40' ROADWAY, 3 SPAN BRIDGES
CONTINUOUS CONCRETE SLAB BRIDGES
JULY, 2014

SUPERSTRUCTURE DETAILS 70'-0 BRIDGE

J40-03-14

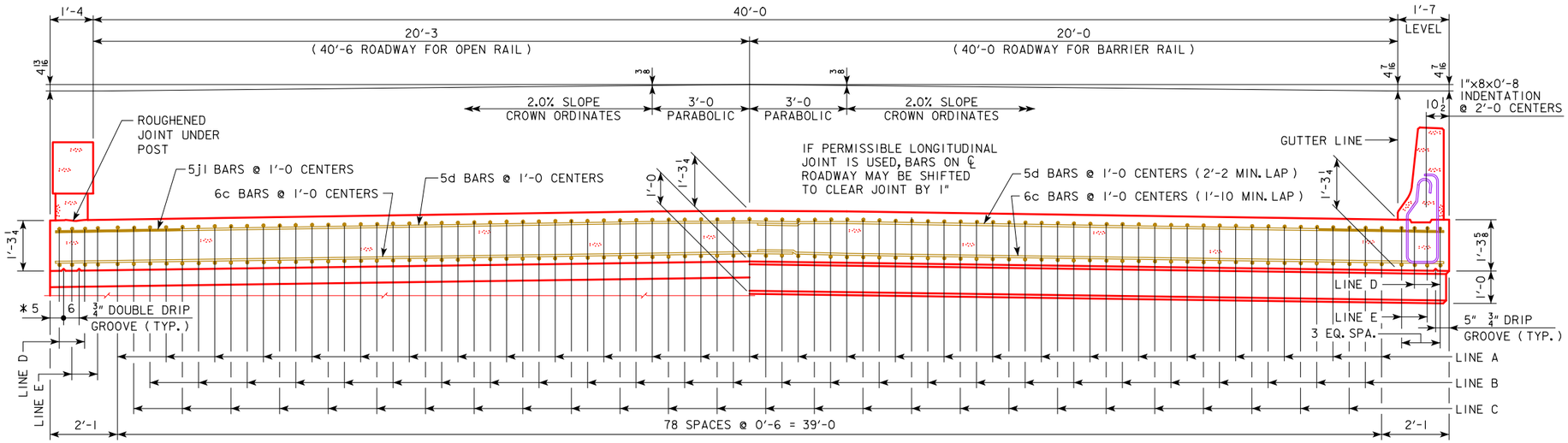

* NOTE: DOUBLE DRIP GROOVES FOR OPEN RAIL OPTION ONLY.

HALF SECTION NEAR ABUTMENT

SLAB CROSS-SECTIONAL AREA FOR OPEN RAIL = 54.86 SQ. FT.

HALF SECTION NEAR PIER

SLAB CROSS-SECTIONAL AREA FOR BARRIER RAIL = 54.91 SQ. FT.

NOTE: TOP LONGITUDINAL REINFORCING STEEL IS TO BE PARALLEL TO AND 2½" CLEAR BELOW TOP OF SLAB. BOTTOM LONGITUDINAL REINFORCING STEEL IS TO BE PARALLEL TO AND 1½" CLEAR ABOVE BOTTOM OF SLAB. REINFORCING STEEL IS TO BE SECURELY WIRED IN PLACE AND ADEQUATELY SUPPORTED ON BAR CHAIRS BEFORE CONCRETE IS POURED. I.M. 451.01 REQUIREMENTS SHALL APPLY FOR BAR CHAIRS.

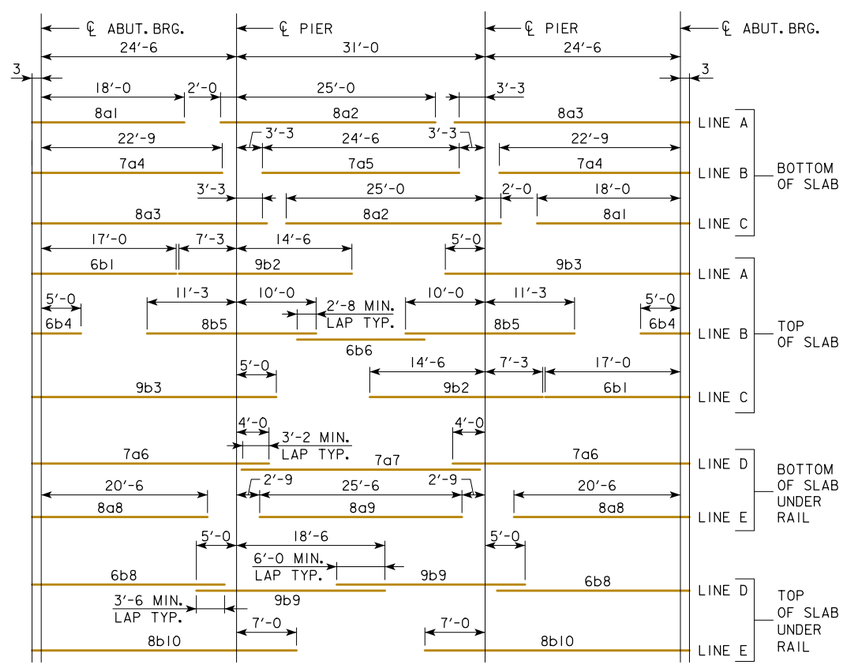

PLACEMENT FOR LONGITUDINAL REINFORCEMENT

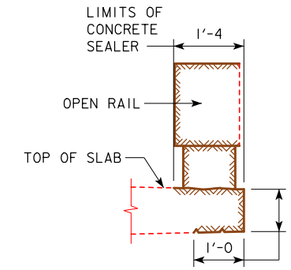

CONCRETE SEALER LIMITS FOR OPEN RAILS

CONCRETE SEALER SHALL BE APPLIED TO BOTH SIDES OF BRIDGE SLAB ON THE TOP, EDGE OF SLAB AND UNDER THE SLAB. THE CONCRETE SEALER SHALL ALSO BE APPLIED TO THE OPEN RAIL ON THE TOP, TRAFFIC FACE SIDE, BOTTOM OF RAIL, AND ON ALL SIDES OF THE OPEN RAIL POSTS.

THE CONCRETE SEALER LIMITS ARE SHOWN IN THE DETAIL AND SHALL APPLY TO THE FULL LENGTH OF BRIDGE. CONCRETE SEALER SHALL BE APPLIED IN ACCORDANCE WITH ARTICLE 2403.03, P, 3 OF THE STANDARD SPECIFICATIONS.

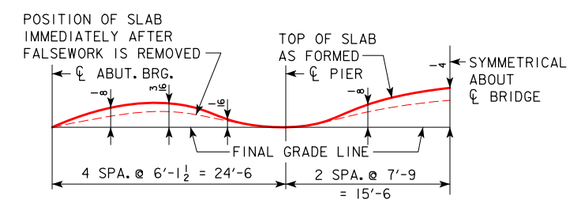

FORM CAMBER DIAGRAM

THIS DIAGRAM SHOWS THE FORM CAMBER REQUIRED TO COMPENSATE FOR THE ANTICIPATED ULTIMATE DEAD LOAD DEFLECTION. THE ABOVE DIMENSIONS DO NOT INCLUDE ANY ALLOWANCE FOR FORM DEFLECTION OR FALSEWORK SETTLEMENT.

LATEST REVISION DATE

APPROVED BY BRIDGE ENGINEER

IOWA DOT Highway Division

STANDARD DESIGN - 40' ROADWAY, 3 SPAN BRIDGES

CONTINUOUS CONCRETE SLAB BRIDGES

JULY, 2014

SUPERSTRUCTURE DETAILS
80'-0 BRIDGE

J40-04-14

BILL OF REINFORCING STEEL FOR SUPERSTRUCTURE - 80' BRIDGE

LOCATION \ SKEW	SHAPE	BAR	0° NO.	0° LENGTH	0° WEIGHT	15° NO.	15° LENGTH	15° WEIGHT	30° NO.	30° LENGTH	30° WEIGHT	45° NO.	45° LENGTH	45° WEIGHT
SLAB LONGITUDINAL BOTTOM		8a1	53	18'-3	2583	53	18'-3	2583	53	18'-3	2583	53	18'-3	2583
SLAB LONGITUDINAL BOTTOM		8a2	53	27'-0	3821	53	27'-0	3821	53	27'-0	3821	53	27'-0	3821
SLAB LONGITUDINAL BOTTOM		8a3	53	28'-0	3963	53	28'-0	3963	53	28'-0	3963	53	28'-0	3963
SLAB LONGITUDINAL BOTTOM		7a4	52	23'-0	2445	52	23'-0	2445	52	23'-0	2445	52	23'-0	2445
SLAB LONGITUDINAL BOTTOM		7a5	26	24'-6	1303	26	24'-6	1303	26	24'-6	1303	26	24'-6	1303
SLAB LONGITUDINAL BOTTOM, AT RAIL		7a6	8	28'-9	471	8	28'-9	471	8	28'-9	471	8	28'-9	471
SLAB LONGITUDINAL BOTTOM, AT RAIL		7a7	4	29'-4	240	4	29'-4	240	4	29'-4	240	4	29'-4	240
SLAB LONGITUDINAL BOTTOM, AT RAIL		8a8	8	20'-9	444	8	20'-9	444	8	20'-9	444	8	20'-9	444
SLAB LONGITUDINAL BOTTOM, AT RAIL		8a9	4	25'-6	273	4	25'-6	273	4	25'-6	273	4	25'-6	273
SLAB LONGITUDINAL TOP		6b1	53	19'-6	1553	53	19'-6	1553	53	19'-6	1553	53	19'-6	1553
SLAB LONGITUDINAL TOP		9b2	53	21'-9	3920	53	21'-9	3920	53	21'-9	3920	53	21'-9	3920
SLAB LONGITUDINAL TOP		9b3	53	32'-0	5767	53	32'-0	5767	53	32'-0	5767	53	32'-0	5767
SLAB LONGITUDINAL TOP		6b4	52	7'-6	586	52	7'-6	586	52	7'-6	586	52	7'-6	586
SLAB LONGITUDINAL TOP		8b5	52	21'-3	2951	52	21'-3	2951	52	21'-3	2951	52	21'-3	2951
SLAB LONGITUDINAL TOP		6b6	26	16'-4	638	26	16'-4	638	26	16'-4	638	26	16'-4	638
SLAB LONGITUDINAL TOP, AT RAIL		6b8	8	25'-6	307	8	25'-6	307	8	25'-6	307	8	25'-6	307
SLAB LONGITUDINAL TOP, AT RAIL		9b9	8	23'-6	640	8	23'-6	640	8	23'-6	640	8	23'-6	640
SLAB LONGITUDINAL TOP, AT RAIL		8b10	8	34'-0	727	8	34'-0	727	8	34'-0	727	8	34'-0	727
SLAB TRANSVERSE BOTTOM		6c1	77	23'-5	2709	77	24'-3	2805	68	23'-5	2392	58	23'-5	2040
SLAB TRANSVERSE BOTTOM		6c2	77	21'-3	2458	77	22'-0	2545	69	21'-3	2203	61	21'-3	1947
SLAB TRANSVERSE ENDS, BOTTOM		6c3	-	-	-	-	-	-	12	VARIES	223	20	VARIES	411
SLAB TRANSVERSE ENDS, BOTTOM		6c4	-	-	-	-	-	-	11	VARIES	219	20	VARIES	386
SLAB TRANSVERSE ENDS, BOTTOM		6c5	-	-	-	-	-	-	11	VARIES	176	18	VARIES	302
SLAB TRANSVERSE ENDS, BOTTOM		6c6	-	-	-	-	-	-	11	VARIES	190	17	VARIES	311
SLAB TRANSVERSE TOP		5d1	77	23'-9	1908	77	24'-7	1975	68	23'-9	1685	58	23'-9	1437
SLAB TRANSVERSE TOP		5d2	77	21'-3	1707	77	22'-0	1767	69	21'-3	1530	61	21'-3	1352
SLAB TRANSVERSE ENDS, TOP		5d3	-	-	-	-	-	-	12	VARIES	155	20	VARIES	286
SLAB TRANSVERSE ENDS, TOP		5d4	-	-	-	-	-	-	11	VARIES	152	20	VARIES	268
SLAB TRANSVERSE ENDS, TOP		5d5	-	-	-	-	-	-	11	VARIES	122	18	VARIES	210
SLAB TRANSVERSE ENDS, TOP		5d6	-	-	-	-	-	-	11	VARIES	132	17	VARIES	216
SLAB, TRANSVERSE AT ABUTMENT		8e1	18	26'-4	1266	18	27'-1	1302	18	29'-6	1418	18	34'-8	1667
SLAB, TRANSVERSE AT ABUTMENT		8e2	18	21'-4	1026	18	22'-0	1058	18	24'-5	1174	18	29'-7	1422
SLAB, HAIRPINS, AT ABUTMENT		6e3	92	5'-0	691	92	5'-1	703	92	5'-5	749	92	6'-1	841
SLAB, DIAGONALS, AT ABUTMENT		6e4	92	5'-11	818	92	5'-11	818	92	5'-11	818	92	5'-11	818
PIER CAP HOOPS		5h1	72	7'-1	532	72	7'-1	532	72	7'-1	532	108	7'-1	798
PIER CAP ENDS		8h2	4	14'-5	154	4	14'-5	154	4	14'-5	154	4	14'-5	154
PIER CAP, BOTTOM LONGITUDINAL		8h3	8	25'-5	543	8	26'-7	568	8	29'-4	627	8	35'-0	748
PIER CAP, BOTTOM LONGITUDINAL		8h4	8	19'-11	426	8	20'-3	433	8	22'-2	474	8	26'-10	574
PIER CAP, TOP LONGITUDINAL		8h5	4	26'-2	280	4	27'-5	293	4	30'-4	324	4	36'-1	386
PIER CAP, TOP LONGITUDINAL		8h6	4	21'-5	229	4	21'-10	234	4	23'-11	256	4	28'-8	307
TOP OF SLAB, TRANSVERSE, AT RAIL		5j1	152	8'-6	1348	152	8'-6	1348	142	8'-6	1259	136	8'-6	1206
WING, VERTICAL		5m1	40	4'-5	185	40	4'-5	185	40	4'-5	185	40	4'-5	185
WING, HORIZONTAL BACK FACE		5n1	24	6'-8	167	24	6'-8	167	24	6'-8	167	24	6'-8	167
WING, HORIZONTAL TRAFFIC FACE		5n3	24	6'-9	169	24	6'-9	169	24	6'-9	169	24	6'-9	169
SUB EPOXY COATED TOTAL - LBS.					49,248			49,688			50,117			51,240
BARRIER RAIL - SEE LIST ON RAIL SHEET J40-46-14					3571			3571			3571			3571
OPEN RAIL - SEE LIST ON RAIL SHEET J40-49-14					3725			3725			3725			3725
EPOXY COATED RAIL TOTAL - LBS. WITH MONOLITHIC PIER CAP		WITH BARRIER RAIL			52,819			53,259			53,688			54,811
		WITH OPEN RAIL			52,973			53,413			53,842			54,965
EPOXY COATED RAIL TOTAL - LBS. WITH NON-MONOLITHIC PIER CAP		WITH BARRIER RAIL			50,655			51,045			51,321			51,844
SAME AS ABOVE EXCEPT ALL "h" BARS DELETED		WITH OPEN RAIL			50,809			51,199			51,475			51,998
STAINLESS STEEL RAIL TOTAL - LBS.		WITH BARRIER RAIL			1893			1893			1893			1893
		WITH OPEN RAIL			2074			2074			2074			2074

ESTIMATED QUANTITIES FOR SUPERSTRUCTURE - 80' BRIDGE

ITEM		SKEW	WITH MONOLITHIC PIER CAP 0°	15°	30°	45°	WITH NON-MONOLITHIC PIER CAP 0°	15°	30°	45°
WITH BARRIER RAIL	* STRUCTURAL CONCRETE (BRIDGE)	C.Y.	195.1	196.2	199.6	207.2	189.1	189.9	192.7	198.8
	REINF. STEEL EPOXY COATED	LBS.	52,819	53,259	53,688	54,811	50,655	51,045	51,321	51,844
	Δ REINF. STEEL STAINLESS STEEL	LBS.	2116	2116	2116	2116	2116	2116	2116	2116
CONCRETE BARRIER OR OPEN RAIL		LIN. FT.	182.0	182.2	182.9	184.5	162.0	162.2	162.9	164.5
WITH OPEN RAIL	* STRUCTURAL CONCRETE (BRIDGE)	C.Y.	195.0	196.0	199.5	207.1	188.9	189.8	192.6	198.7
	REINF. STEEL EPOXY COATED	LBS.	52,973	53,413	53,842	54,965	50,809	51,199	51,475	51,998
	Δ REINF. STEEL STAINLESS STEEL	LBS.	2297	2297	2297	2267	2297	2297	2267	2297

* INCLUDES 4 WINGS @ 0.68 C.Y. EACH; EXCLUDES RAIL CONCRETE.
Δ INCLUDES ABUTMENT PAVING NOTCH BAR WEIGHT.

BENT BAR DETAILS

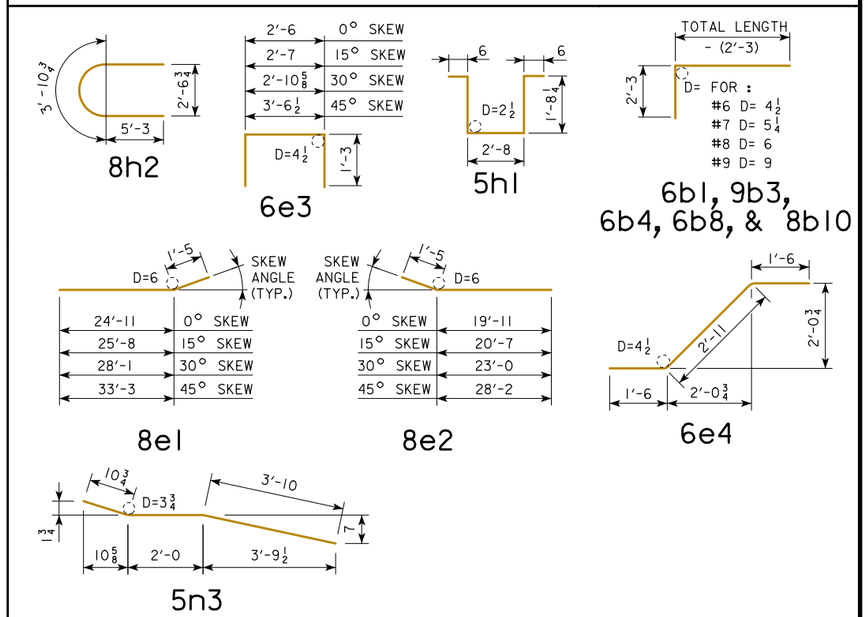

NOTE: ALL DIMENSIONS ARE OUT TO OUT. D = PIN DIAMETER.

STAINLESS STEEL REINFORCING FOR SUPERSTRUCTURE - BRIDGE

LOCATION \ ALL SKEWS	SHAPE	BAR	NO.	LENGTH	WEIGHT
ABUTMENT PAVING NOTCH BAR		8u1	40	2'-1	223

8u1 BARS SHALL BE PAID FOR UNDER THE BID ITEM "REINFORCING STEEL, STAINLESS STEEL". WEIGHT = LBS.

NOTES:
ALL BARRIER RAIL REINFORCING STEEL IS TO BE EITHER EPOXY COATED OR STAINLESS STEEL AS SHOWN OR NOTED. THE STAINLESS STEEL REINFORCING STEEL SHALL BE DEFORMED BAR GRADE 60 MEETING THE REQUIREMENTS OF MATERIALS I.M.452.

ALL OTHER REINFORCING STEEL IS TO BE EPOXY COATED.

THE TRANSVERSE REBARS ARE DETAILED WITH A SPLICE LAP. AT THE CONTRACTOR'S OPTION, THIS LAP MAY BE ELIMINATED BY FURNISHING FULL LENGTH BARS WITH NO REDUCTION IN PAY WEIGHT FOR SAME.

REVISED 09-14 - CHANGED REFERENCE TO THE BARRIER RAIL & OPEN RAIL TO THE J40-14 STANDARDS INSTEAD OF J40-06 STANDARDS.
REVISED 03-2016 - REVISION FOR ADDITION OF PAVING NOTCH BAR 8u1.
REVISED 04-2016 - REVISION TO INCLUDE PAVING NOTCH BAR 8u1 WEIGHT IN ESTIMATED QUANTITIES TABLE.

04-2016
LATEST REVISION DATE

APPROVED BY BRIDGE ENGINEER

IOWA DOT Highway Division

STANDARD DESIGN - 40' ROADWAY, 3 SPAN BRIDGES

CONTINUOUS CONCRETE SLAB BRIDGES

JULY, 2014

SUPERSTRUCTURE DETAILS 80'-0 BRIDGE

J40-05-14

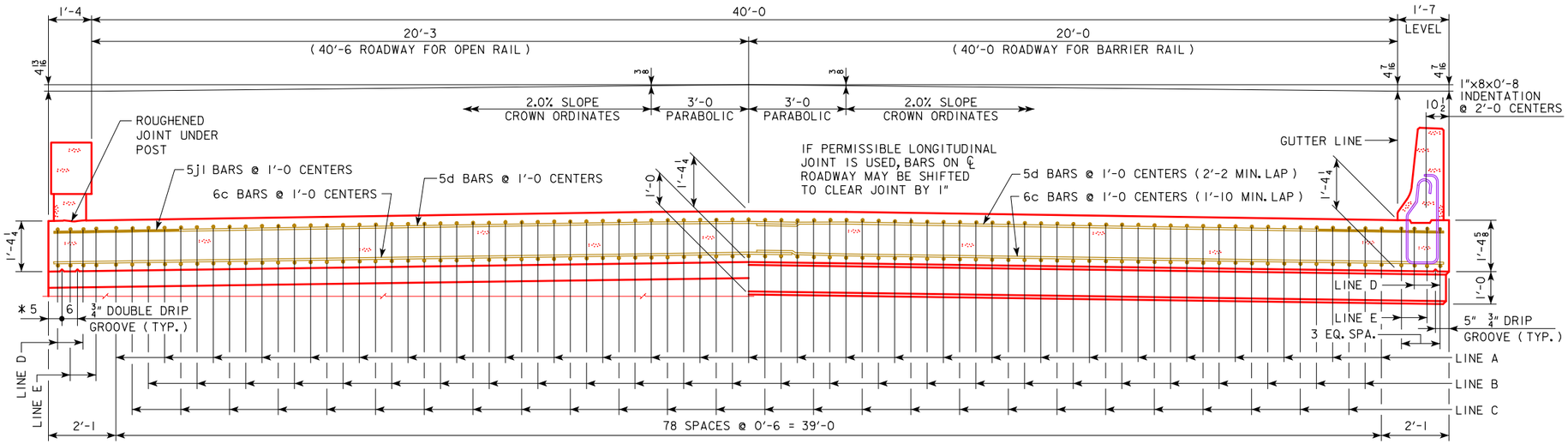

* NOTE: DOUBLE DRIP GROOVES FOR OPEN RAIL OPTION ONLY.

HALF SECTION NEAR ABUTMENT

SLAB CROSS-SECTIONAL AREA FOR OPEN RAIL = 58.45 SQ. FT.

HALF SECTION NEAR PIER

SLAB CROSS-SECTIONAL AREA FOR BARRIER RAIL = 58.50 SQ. FT.

NOTE: TOP LONGITUDINAL REINFORCING STEEL IS TO BE PARALLEL TO AND 2½" CLEAR BELOW TOP OF SLAB. BOTTOM LONGITUDINAL REINFORCING STEEL IS TO BE PARALLEL TO AND 1½" CLEAR ABOVE BOTTOM OF SLAB. REINFORCING STEEL IS TO BE SECURELY WIRED IN PLACE AND ADEQUATELY SUPPORTED ON BAR CHAIRS BEFORE CONCRETE IS POURED. I.M. 451.01 REQUIREMENTS SHALL APPLY FOR BAR CHAIRS.

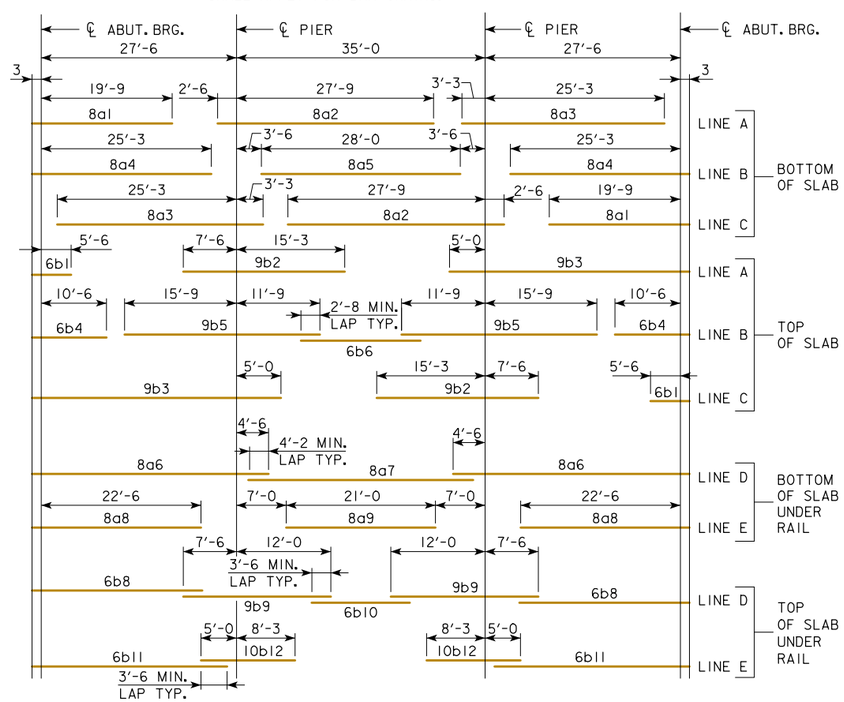

PLACEMENT FOR LONGITUDINAL REINFORCEMENT

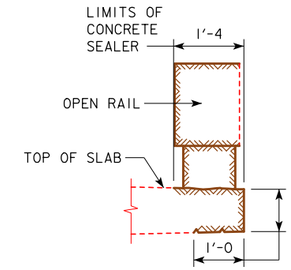

CONCRETE SEALER LIMITS FOR OPEN RAILS

CONCRETE SEALER SHALL BE APPLIED TO BOTH SIDES OF BRIDGE SLAB ON THE TOP, EDGE OF SLAB AND UNDER THE SLAB. THE CONCRETE SEALER SHALL ALSO BE APPLIED TO THE OPEN RAIL ON THE TOP, TRAFFIC FACE SIDE, BOTTOM OF RAIL, AND ON ALL SIDES OF THE OPEN RAIL POSTS.

THE CONCRETE SEALER LIMITS ARE SHOWN IN THE DETAIL AND SHALL APPLY TO THE FULL LENGTH OF BRIDGE. CONCRETE SEALER SHALL BE APPLIED IN ACCORDANCE WITH ARTICLE 2403.03, P, 3 OF THE STANDARD SPECIFICATIONS.

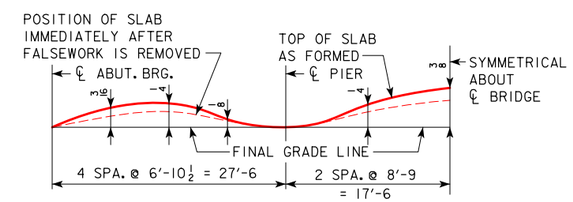

FORM CAMBER DIAGRAM

THIS DIAGRAM SHOWS THE FORM CAMBER REQUIRED TO COMPENSATE FOR THE ANTICIPATED ULTIMATE DEAD LOAD DEFLECTION. THE ABOVE DIMENSIONS DO NOT INCLUDE ANY ALLOWANCE FOR FORM DEFLECTION OR FALSEWORK SETTLEMENT.

LATEST REVISION DATE

APPROVED BY BRIDGE ENGINEER

IOWA DOT Highway Division

STANDARD DESIGN - 40' ROADWAY, 3 SPAN BRIDGES

CONTINUOUS CONCRETE SLAB BRIDGES

JULY, 2014

SUPERSTRUCTURE DETAILS
90'-0 BRIDGE

J40-06-14

BILL OF REINFORCING STEEL FOR SUPERSTRUCTURE - 90' BRIDGE

LOCATION \ SKEW	SHAPE	BAR	0° NO.	0° LENGTH	0° WEIGHT	15° NO.	15° LENGTH	15° WEIGHT	30° NO.	30° LENGTH	30° WEIGHT	45° NO.	45° LENGTH	45° WEIGHT
SLAB LONGITUDINAL BOTTOM		8a1	53	20'-0	2831	53	20'-0	2831	53	20'-0	2831	53	20'-0	2831
SLAB LONGITUDINAL BOTTOM		8a2	53	30'-3	4281	53	30'-3	4281	53	30'-3	4281	53	30'-3	4281
SLAB LONGITUDINAL BOTTOM		8a3	53	28'-6	4034	53	28'-6	4034	53	28'-6	4034	53	28'-6	4034
SLAB LONGITUDINAL BOTTOM		8a4	52	25'-6	3541	52	25'-6	3541	52	25'-6	3541	52	25'-6	3541
SLAB LONGITUDINAL BOTTOM		8a5	26	28'-0	1944	26	28'-0	1944	26	28'-0	1944	26	28'-0	1944
SLAB LONGITUDINAL BOTTOM, AT RAIL		8a6	8	32'-3	689	8	32'-3	689	8	32'-3	689	8	32'-3	689
SLAB LONGITUDINAL BOTTOM, AT RAIL		8a7	4	34'-4	367	4	34'-4	367	4	34'-4	367	4	34'-4	367
SLAB LONGITUDINAL BOTTOM, AT RAIL		8a8	8	22'-9	486	8	22'-9	486	8	22'-9	486	8	22'-9	486
SLAB LONGITUDINAL BOTTOM, AT RAIL		8a9	4	21'-0	225	4	21'-0	225	4	21'-0	225	4	21'-0	225
SLAB LONGITUDINAL TOP		6b1	53	8'-0	637	53	8'-0	637	53	8'-0	637	53	8'-0	637
SLAB LONGITUDINAL TOP		9b2	53	22'-9	4100	53	22'-9	4100	53	22'-9	4100	53	22'-9	4100
SLAB LONGITUDINAL TOP		9b3	53	35'-0	6307	53	35'-0	6307	53	35'-0	6307	53	35'-0	6307
SLAB LONGITUDINAL TOP		6b4	52	13'-0	1016	52	13'-0	1016	52	13'-0	1016	52	13'-0	1016
SLAB LONGITUDINAL TOP		9b5	52	27'-6	4862	52	27'-6	4862	52	27'-6	4862	52	27'-6	4862
SLAB LONGITUDINAL TOP		6b6	26	16'-10	658	26	16'-10	658	26	16'-10	658	26	16'-10	658
SLAB LONGITUDINAL TOP, AT RAIL		6b8	8	26'-0	313	8	26'-0	313	8	26'-0	313	8	26'-0	313
SLAB LONGITUDINAL TOP, AT RAIL		9b9	8	19'-6	531	8	19'-6	531	8	19'-6	531	8	19'-6	531
SLAB LONGITUDINAL TOP, AT RAIL		6b10	4	18'-0	109	4	18'-0	109	4	18'-0	109	4	18'-0	109
SLAB LONGITUDINAL TOP, AT RAIL		6b11	8	28'-6	343	8	28'-6	343	8	28'-6	343	8	28'-6	343
SLAB LONGITUDINAL TOP, AT RAIL		10b12	8	13'-3	457	8	13'-3	457	8	13'-3	457	8	13'-3	457
SLAB TRANSVERSE BOTTOM		6c1	87	23'-5	3060	87	24'-3	3169	78	23'-5	2744	68	23'-5	2392
SLAB TRANSVERSE BOTTOM		6c2	87	21'-3	2777	87	22'-0	2875	79	21'-3	2522	71	21'-3	2267
SLAB TRANSVERSE ENDS, BOTTOM		6c3	-	-	-	-	-	-	12	VARIES	223	20	VARIES	411
SLAB TRANSVERSE ENDS, BOTTOM		6c4	-	-	-	-	-	-	11	VARIES	219	20	VARIES	386
SLAB TRANSVERSE ENDS, BOTTOM		6c5	-	-	-	-	-	-	11	VARIES	176	18	VARIES	302
SLAB TRANSVERSE ENDS, BOTTOM		6c6	-	-	-	-	-	-	11	VARIES	190	17	VARIES	311
SLAB TRANSVERSE TOP		5d1	87	23'-9	2156	87	24'-7	2231	78	23'-9	1933	68	23'-9	1685
SLAB TRANSVERSE TOP		5d2	87	21'-3	1929	87	22'-0	1997	79	21'-3	1751	71	21'-3	1574
SLAB TRANSVERSE ENDS, TOP		5d3	-	-	-	-	-	-	12	VARIES	155	20	VARIES	286
SLAB TRANSVERSE ENDS, TOP		5d4	-	-	-	-	-	-	11	VARIES	152	20	VARIES	268
SLAB TRANSVERSE ENDS, TOP		5d5	-	-	-	-	-	-	11	VARIES	122	18	VARIES	210
SLAB TRANSVERSE ENDS, TOP		5d6	-	-	-	-	-	-	11	VARIES	132	17	VARIES	216
SLAB, TRANSVERSE AT ABUTMENT		8e1	18	26'-4	1266	18	27'-1	1302	18	29'-6	1418	18	34'-8	1667
SLAB, TRANSVERSE AT ABUTMENT		8e2	18	21'-4	1026	18	22'-0	1058	18	24'-5	1174	18	29'-7	1422
SLAB, HAIRPINS, AT ABUTMENT		6e3	92	5'-0	691	92	5'-1	703	92	5'-5	749	92	6'-1	841
SLAB, DIAGONALS, AT ABUTMENT		6e4	92	5'-11	818	92	5'-11	818	92	5'-11	818	92	5'-11	818
PIER CAP HOOPS		5h1	72	7'-3	545	72	7'-3	545	72	7'-3	545	108	7'-3	817
PIER CAP ENDS		8h2	4	14'-5	154	4	14'-5	154	4	14'-5	154	4	14'-5	154
PIER CAP, BOTTOM LONGITUDINAL		8h3	8	25'-5	543	8	26'-7	568	8	29'-4	627	8	35'-0	748
PIER CAP, BOTTOM LONGITUDINAL		8h4	8	19'-11	426	8	20'-3	433	8	22'-2	474	8	26'-10	574
PIER CAP, TOP LONGITUDINAL		8h5	4	26'-2	280	4	27'-5	293	4	30'-4	324	4	36'-1	386
PIER CAP, TOP LONGITUDINAL		8h6	4	21'-5	229	4	21'-10	234	4	23'-11	256	4	28'-8	307
TOP OF SLAB, TRANSVERSE, AT RAIL		5j1	172	8'-6	1525	172	8'-6	1525	162	8'-6	1437	156	8'-6	1384
WING, VERTICAL		5m1	40	4'-5	185	40	4'-5	185	40	4'-5	185	40	4'-5	185
WING, HORIZONTAL BACK FACE		5n1	24	6'-8	167	24	6'-8	167	24	6'-8	167	24	6'-8	167
WING, HORIZONTAL TRAFFIC FACE		5n3	24	6'-9	169	24	6'-9	169	24	6'-9	169	24	6'-9	169
SUB EPOXY COATED TOTAL - LBS.					55,677			56,157			56,547			57,678
BARRIER RAIL - SEE LIST ON RAIL SHEET J40-46-14					3882			3882			3882			3882
OPEN RAIL - SEE LIST ON RAIL SHEET J40-49-14					4121			4121			4121			4121
EPOXY COATED RAIL TOTAL - LBS. WITH MONOLITHIC PIER CAP		WITH BARRIER RAIL			59,559			60,039			60,429			61,560
		WITH OPEN RAIL			59,798			60,278			60,668			61,799
EPOXY COATED RAIL TOTAL - LBS. WITH NON-MONOLITHIC PIER CAP		WITH BARRIER RAIL			57,382			57,812			58,049			58,574
SAME AS ABOVE EXCEPT ALL "h" BARS DELETED		WITH OPEN RAIL			57,621			58,051			58,288			58,813
STAINLESS STEEL RAIL TOTAL - LBS.		WITH BARRIER RAIL			2068			2068			2068			2068
		WITH OPEN RAIL			2209			2209			2209			2209

ESTIMATED QUANTITIES FOR SUPERSTRUCTURE - 90' BRIDGE

ITEM		SKEW	WITH MONOLITHIC PIER CAP 0°	15°	30°	45°	WITH NON-MONOLITHIC PIER CAP 0°	15°	30°	45°
WITH BARRIER RAIL	* STRUCTURAL CONCRETE (BRIDGE)	C.Y.	227.1	228.1	231.5	239.0	221.0	221.8	224.6	230.6
	REINF. STEEL EPOXY COATED	LBS.	59,559	60,039	60,429	61,560	57,382	57,812	58,049	58,574
	Δ REINF. STEEL STAINLESS STEEL	LBS.	2291	2291	2291	2291	2291	2291	2291	2291
CONCRETE BARRIER OR OPEN RAIL		LIN. FT.	202.0	202.2	202.9	204.5	202.0	202.2	202.9	204.5
WITH OPEN RAIL	* STRUCTURAL CONCRETE (BRIDGE)	C.Y.	226.9	227.9	231.3	238.8	220.8	221.7	224.4	230.4
	REINF. STEEL EPOXY COATED	LBS.	59,798	60,278	60,668	61,799	57,621	58,051	58,288	58,813
	Δ REINF. STEEL STAINLESS STEEL	LBS.	2432	2432	2432	2432	2432	2432	2432	2432

* INCLUDES 4 WINGS @ 0.68 C.Y. EACH; EXCLUDES RAIL CONCRETE.
Δ INCLUDES ABUTMENT PAVING NOTCH BAR WEIGHT.

BENT BAR DETAILS

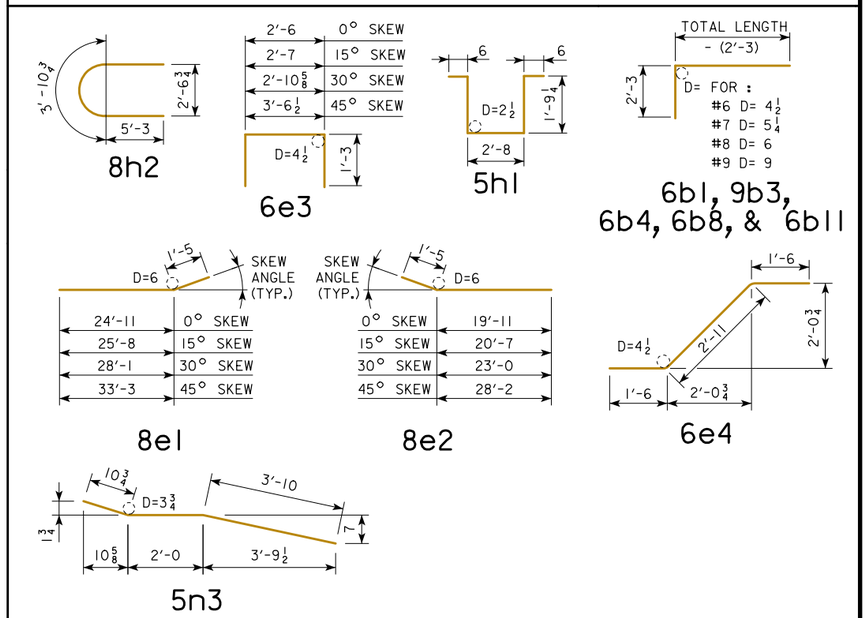

NOTE: ALL DIMENSIONS ARE OUT TO OUT. D = PIN DIAMETER.

STAINLESS STEEL REINFORCING FOR SUPERSTRUCTURE - BRIDGE

LOCATION \ ALL SKEWS	SHAPE	BAR	NO.	LENGTH	WEIGHT
ABUTMENT PAVING NOTCH BAR		8u1	40	2'-1	223

8u1 BARS SHALL BE PAID FOR UNDER THE BID ITEM "REINFORCING STEEL, STAINLESS STEEL". WEIGHT = LBS.

NOTES:
ALL BARRIER RAIL REINFORCING STEEL IS TO BE EITHER EPOXY COATED OR STAINLESS STEEL AS SHOWN OR NOTED. THE STAINLESS STEEL REINFORCING STEEL SHALL BE DEFORMED BAR GRADE 60 MEETING THE REQUIREMENTS OF MATERIALS I.M.452.

ALL OTHER REINFORCING STEEL IS TO BE EPOXY COATED.

THE TRANSVERSE REBARS ARE DETAILED WITH A SPLICE LAP. AT THE CONTRACTOR'S OPTION, THIS LAP MAY BE ELIMINATED BY FURNISHING FULL LENGTH BARS WITH NO REDUCTION IN PAY WEIGHT FOR SAME.

REVISED 09-14 - CHANGED REFERENCE TO THE BARRIER RAIL & OPEN RAIL TO THE J40-14 STANDARDS INSTEAD OF J40-06 STANDARDS.
REVISED 03-2016 - REVISION FOR ADDITION OF PAVING NOTCH BAR 8u1.
REVISED 04-2016 - REVISION TO INCLUDE PAVING NOTCH BAR 8u1 WEIGHT IN ESTIMATED QUANTITIES TABLE.

04-2016
LATEST REVISION DATE

APPROVED BY BRIDGE ENGINEER

IOWA DOT Highway Division

STANDARD DESIGN - 40' ROADWAY, 3 SPAN BRIDGES
CONTINUOUS CONCRETE SLAB BRIDGES
JULY, 2014

SUPERSTRUCTURE DETAILS 90'-0 BRIDGE

J40-07-14

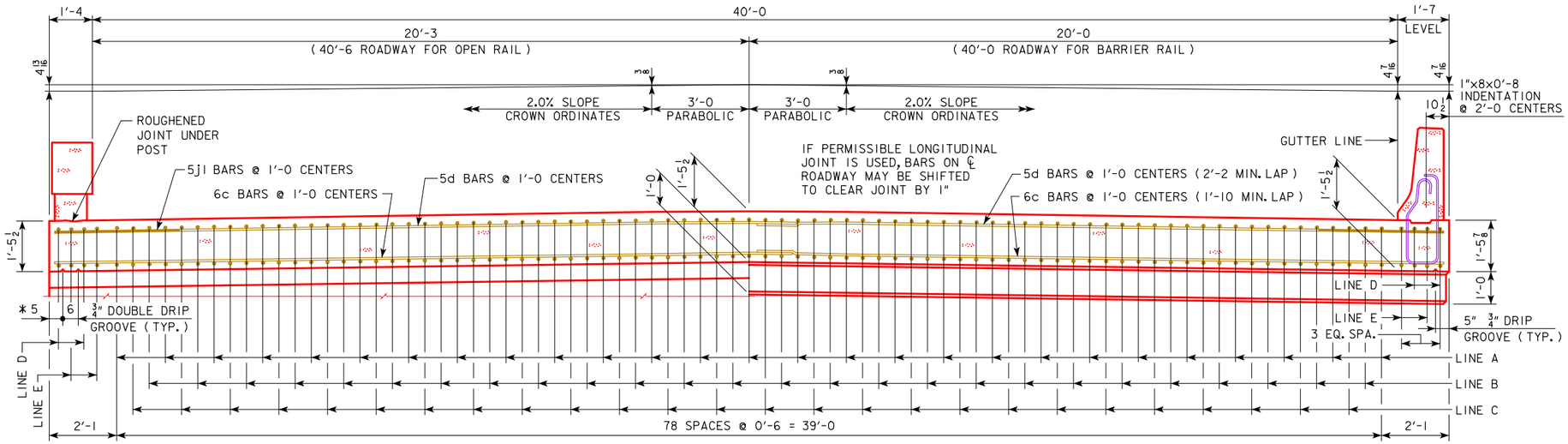

* NOTE: DOUBLE DRIP GROOVES FOR OPEN RAIL OPTION ONLY.

HALF SECTION NEAR ABUTMENT

SLAB CROSS-SECTIONAL AREA FOR OPEN RAIL = 62.95 SQ. FT.

HALF SECTION NEAR PIER

SLAB CROSS-SECTIONAL AREA FOR BARRIER RAIL = 63.00 SQ. FT.

NOTE: TOP LONGITUDINAL REINFORCING STEEL IS TO BE PARALLEL TO AND 2½" CLEAR BELOW TOP OF SLAB. BOTTOM LONGITUDINAL REINFORCING STEEL IS TO BE PARALLEL TO AND 1½" CLEAR ABOVE BOTTOM OF SLAB. REINFORCING STEEL IS TO BE SECURELY WIRED IN PLACE AND ADEQUATELY SUPPORTED ON BAR CHAIRS BEFORE CONCRETE IS POURED. I.M. 451.01 REQUIREMENTS SHALL APPLY FOR BAR CHAIRS.

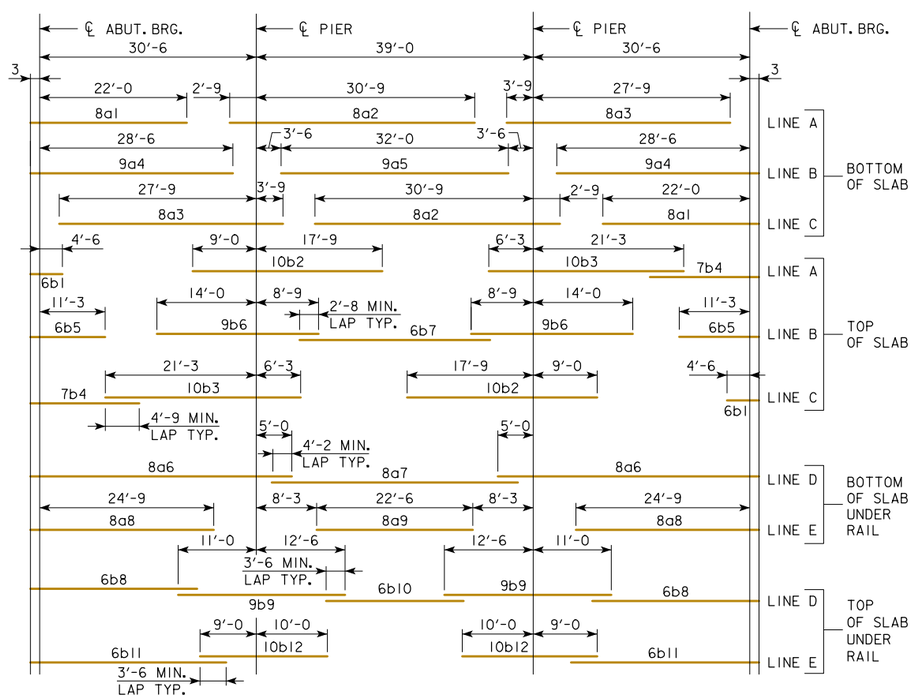

PLACEMENT FOR LONGITUDINAL REINFORCEMENT

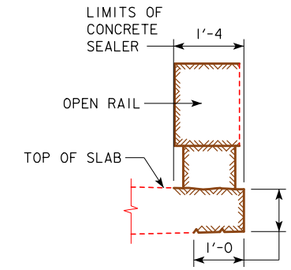

CONCRETE SEALER LIMITS FOR OPEN RAILS

CONCRETE SEALER SHALL BE APPLIED TO BOTH SIDES OF BRIDGE SLAB ON THE TOP, EDGE OF SLAB AND UNDER THE SLAB. THE CONCRETE SEALER SHALL ALSO BE APPLIED TO THE OPEN RAIL ON THE TOP, TRAFFIC FACE SIDE, BOTTOM OF RAIL, AND ON ALL SIDES OF THE OPEN RAIL POSTS.

THE CONCRETE SEALER LIMITS ARE SHOWN IN THE DETAIL AND SHALL APPLY TO THE FULL LENGTH OF BRIDGE. CONCRETE SEALER SHALL BE APPLIED IN ACCORDANCE WITH ARTICLE 2403.03, P, 3 OF THE STANDARD SPECIFICATIONS.

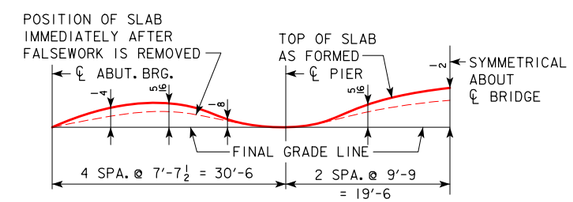

FORM CAMBER DIAGRAM

THIS DIAGRAM SHOWS THE FORM CAMBER REQUIRED TO COMPENSATE FOR THE ANTICIPATED ULTIMATE DEAD LOAD DEFLECTION. THE ABOVE DIMENSIONS DO NOT INCLUDE ANY ALLOWANCE FOR FORM DEFLECTION OR FALSEWORK SETTLEMENT.

LATEST REVISION DATE

APPROVED BY BRIDGE ENGINEER

IOWA DOT Highway Division

STANDARD DESIGN - 40' ROADWAY, 3 SPAN BRIDGES

CONTINUOUS CONCRETE SLAB BRIDGES

JULY, 2014

SUPERSTRUCTURE DETAILS
100'-0 BRIDGE

J40-08-14

BILL OF REINFORCING STEEL FOR SUPERSTRUCTURE - 100' BRIDGE

LOCATION \ SKEW	SHAPE	BAR	0° NO.	0° LENGTH	0° WEIGHT	15° NO.	15° LENGTH	15° WEIGHT	30° NO.	30° LENGTH	30° WEIGHT	45° NO.	45° LENGTH	45° WEIGHT
SLAB LONGITUDINAL BOTTOM		8a1	53	22'-3	3149	53	22'-3	3149	53	22'-3	3149	53	22'-3	3149
SLAB LONGITUDINAL BOTTOM		8a2	53	33'-6	4741	53	33'-6	4741	53	33'-6	4741	53	33'-6	4741
SLAB LONGITUDINAL BOTTOM		8a3	53	31'-6	4458	53	31'-6	4458	53	31'-6	4458	53	31'-6	4458
SLAB LONGITUDINAL BOTTOM		9a4	52	28'-9	5083	52	28'-9	5083	52	28'-9	5083	52	28'-9	5083
SLAB LONGITUDINAL BOTTOM		9a5	26	32'-0	2829	26	32'-0	2829	26	32'-0	2829	26	32'-0	2829
SLAB LONGITUDINAL BOTTOM, AT RAIL		8a6	8	35'-9	764	8	35'-9	764	8	35'-9	764	8	35'-9	764
SLAB LONGITUDINAL BOTTOM, AT RAIL		8a7	4	37'-4	399	4	37'-4	399	4	37'-4	399	4	37'-4	399
SLAB LONGITUDINAL BOTTOM, AT RAIL		8a8	8	25'-0	534	8	25'-0	534	8	25'-0	534	8	25'-0	534
SLAB LONGITUDINAL BOTTOM, AT RAIL		8a9	4	22'-6	241	4	22'-6	241	4	22'-6	241	4	22'-6	241
SLAB LONGITUDINAL TOP		6b1	53	7'-0	558	53	7'-0	558	53	7'-0	558	53	7'-0	558
SLAB LONGITUDINAL TOP		10b2	53	26'-9	6101	53	26'-9	6101	53	26'-9	6101	53	26'-9	6101
SLAB LONGITUDINAL TOP		10b3	53	27'-6	6272	53	27'-6	6272	53	27'-6	6272	53	27'-6	6272
SLAB LONGITUDINAL TOP		7b4	53	16'-6	1788	53	16'-6	1788	53	16'-6	1788	53	16'-6	1788
SLAB LONGITUDINAL TOP		6b5	52	13'-9	1074	52	13'-9	1074	52	13'-9	1074	52	13'-9	1074
SLAB LONGITUDINAL TOP		9b6	52	22'-9	4023	52	22'-9	4023	52	22'-9	4023	52	22'-9	4023
SLAB LONGITUDINAL TOP		6b7	26	26'-10	1048	26	26'-10	1048	26	26'-10	1048	26	26'-10	1048
SLAB LONGITUDINAL TOP, AT RAIL		6b8	8	25'-6	307	8	25'-6	307	8	25'-6	307	8	25'-6	307
SLAB LONGITUDINAL TOP, AT RAIL		9b9	8	23'-6	640	8	23'-6	640	8	23'-6	640	8	23'-6	640
SLAB LONGITUDINAL TOP, AT RAIL		6b10	4	21'-0	127	4	21'-0	127	4	21'-0	127	4	21'-0	127
SLAB LONGITUDINAL TOP, AT RAIL		6b11	8	27'-6	331	8	27'-6	331	8	27'-6	331	8	27'-6	331
SLAB LONGITUDINAL TOP, AT RAIL		10b12	8	19'-0	655	8	19'-0	655	8	19'-0	655	8	19'-0	655
SLAB TRANSVERSE BOTTOM		6c1	97	23'-5	3412	97	24'-3	3534	88	23'-5	3096	78	23'-5	2744
SLAB TRANSVERSE BOTTOM		6c2	97	21'-3	3096	97	22'-0	3206	89	21'-3	2841	81	21'-3	2586
SLAB TRANSVERSE ENDS, BOTTOM		6c3	-	-	-	-	-	-	12	VARIES	223	20	VARIES	411
SLAB TRANSVERSE ENDS, BOTTOM		6c4	-	-	-	-	-	-	11	VARIES	219	20	VARIES	386
SLAB TRANSVERSE ENDS, BOTTOM		6c5	-	-	-	-	-	-	11	VARIES	176	18	VARIES	302
SLAB TRANSVERSE ENDS, BOTTOM		6c6	-	-	-	-	-	-	11	VARIES	190	17	VARIES	311
SLAB TRANSVERSE TOP		5d1	97	23'-9	2403	97	24'-7	2488	88	23'-9	2180	78	23'-9	1933
SLAB TRANSVERSE TOP		5d2	97	21'-3	2150	97	22'-0	2226	89	21'-3	1973	81	21'-3	1796
SLAB TRANSVERSE ENDS, TOP		5d3	-	-	-	-	-	-	12	VARIES	155	20	VARIES	286
SLAB TRANSVERSE ENDS, TOP		5d4	-	-	-	-	-	-	11	VARIES	152	20	VARIES	268
SLAB TRANSVERSE ENDS, TOP		5d5	-	-	-	-	-	-	11	VARIES	122	18	VARIES	210
SLAB TRANSVERSE ENDS, TOP		5d6	-	-	-	-	-	-	11	VARIES	132	17	VARIES	216
SLAB, TRANSVERSE AT ABUTMENT		8e1	18	26'-4	1266	18	27'-1	1302	18	29'-6	1418	18	34'-8	1667
SLAB, TRANSVERSE AT ABUTMENT		8e2	18	21'-4	1026	18	22'-0	1058	18	24'-5	1174	18	29'-7	1422
SLAB, HAIRPINS, AT ABUTMENT		6e3	92	5'-0	691	92	5'-1	703	92	5'-5	749	92	6'-1	841
SLAB, DIAGONALS, AT ABUTMENT		6e4	92	5'-11	818	92	5'-11	818	92	5'-11	818	92	5'-11	818
PIER CAP HOOPS		5h1	60	7'-5	465	60	7'-5	465	80	7'-5	619	100	7'-5	774
PIER CAP ENDS		8h2	4	14'-5	154	4	14'-5	154	4	14'-5	154	4	14'-5	154
PIER CAP, BOTTOM LONGITUDINAL		8h3	8	25'-5	543	8	26'-7	568	8	29'-4	627	8	35'-0	748
PIER CAP, BOTTOM LONGITUDINAL		8h4	8	19'-11	426	8	20'-3	433	8	22'-2	474	8	26'-10	574
PIER CAP, TOP LONGITUDINAL		8h5	4	26'-2	280	4	27'-5	293	4	30'-4	324	4	36'-1	386
PIER CAP, TOP LONGITUDINAL		8h6	4	21'-5	229	4	21'-10	234	4	23'-11	256	4	28'-8	307
TOP OF SLAB, TRANSVERSE, AT RAIL		5j1	192	8'-6	1703	192	8'-6	1703	182	8'-6	1614	176	8'-6	1561
WING, VERTICAL		5m1	40	4'-5	185	40	4'-5	185	40	4'-5	185	40	4'-5	185
WING, HORIZONTAL BACK FACE		5n1	24	6'-8	167	24	6'-8	167	24	6'-8	167	24	6'-8	167
WING, HORIZONTAL TRAFFIC FACE		5n3	24	6'-9	169	24	6'-9	169	24	6'-9	169	24	6'-9	169
SUB EPOXY COATED TOTAL - LBS.					64,305			64,828			65,329			66,344
BARRIER RAIL - SEE LIST ON RAIL SHEET J40-46-14					4194			4194			4194			4194
OPEN RAIL - SEE LIST ON RAIL SHEET J40-49-14					4446			4446			4446			4446
EPOXY COATED RAIL TOTAL - LBS. WITH MONOLITHIC PIER CAP		WITH BARRIER RAIL			68,449			69,022			69,523			70,538
		WITH OPEN RAIL			68,751			69,274			69,775			70,790
EPOXY COATED RAIL TOTAL - LBS. WITH NON-MONOLITHIC PIER CAP		WITH BARRIER RAIL			66,402			66,875			67,069			67,595
SAME AS ABOVE EXCEPT ALL "h" BARS DELETED		WITH OPEN RAIL			66,654			67,127			67,321			67,847
STAINLESS STEEL RAIL TOTAL - LBS.		WITH BARRIER RAIL			2267			2267			2267			2267
		WITH OPEN RAIL			2348			2348			2348			2348

ESTIMATED QUANTITIES FOR SUPERSTRUCTURE - 100' BRIDGE

ITEM		SKEW	WITH MONOLITHIC PIER CAP 0°	15°	30°	45°	WITH NON-MONOLITHIC PIER CAP 0°	15°	30°	45°
WITH BARRIER RAIL	* STRUCTURAL CONCRETE (BRIDGE)	C.Y.	264.9	265.9	269.3	276.6	258.8	259.6	262.3	268.2
	REINF. STEEL EPOXY COATED	LBS.	68,449	69,022	69,523	70,538	66,402	66,875	67,069	67,595
	Δ REINF. STEEL STAINLESS STEEL	LBS.	2490	2490	2490	2490	2490	2490	2490	2490
CONCRETE BARRIER OR OPEN RAIL		LIN. FT.	222.0	222.2	222.9	224.5	222.0	222.2	222.9	224.5
WITH OPEN RAIL	* STRUCTURAL CONCRETE (BRIDGE)	C.Y.	264.7	265.7	269.1	276.4	258.7	259.5	262.2	268.0
	REINF. STEEL EPOXY COATED	LBS.	68,751	69,274	69,775	70,790	66,654	67,127	67,321	67,847
	Δ REINF. STEEL STAINLESS STEEL	LBS.	2571	2571	2571	2571	2571	2571	2571	2571

* INCLUDES 4 WINGS @ 0.68 C.Y. EACH; EXCLUDES RAIL CONCRETE.
Δ INCLUDES ABUTMENT PAVING NOTCH BAR WEIGHT.

BENT BAR DETAILS

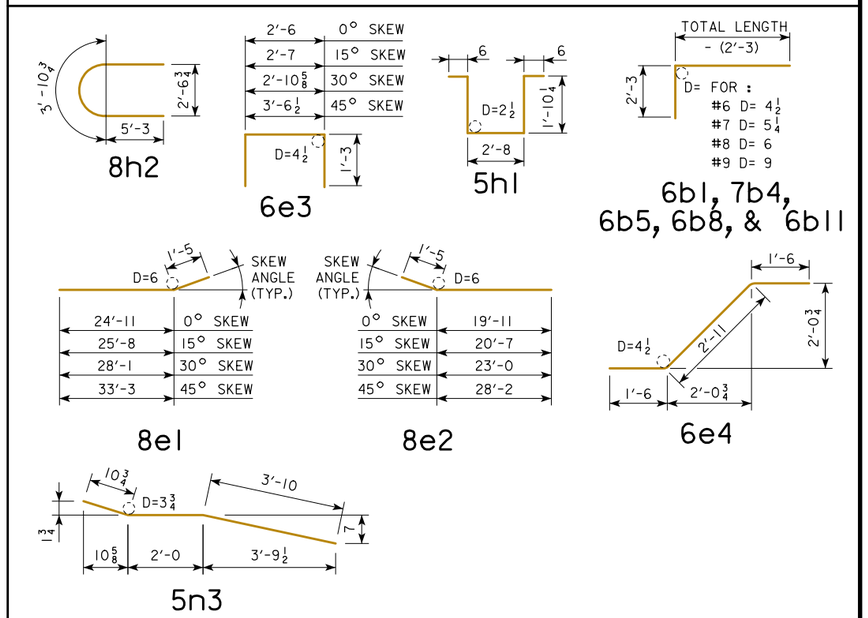

NOTE: ALL DIMENSIONS ARE OUT TO OUT. D = PIN DIAMETER.

STAINLESS STEEL REINFORCING FOR SUPERSTRUCTURE - BRIDGE

LOCATION \ ALL SKEWS	SHAPE	BAR	NO.	LENGTH	WEIGHT
ABUTMENT PAVING NOTCH BAR		8u1	40	2'-1	223

8u1 BARS SHALL BE PAID FOR UNDER THE BID ITEM "REINFORCING STEEL, STAINLESS STEEL". WEIGHT = LBS.

NOTES:
ALL BARRIER RAIL REINFORCING STEEL IS TO BE EITHER EPOXY COATED OR STAINLESS STEEL AS SHOWN OR NOTED. THE STAINLESS STEEL REINFORCING STEEL SHALL BE DEFORMED BAR GRADE 60 MEETING THE REQUIREMENTS OF MATERIALS I.M.452.

ALL OTHER REINFORCING STEEL IS TO BE EPOXY COATED.

THE TRANSVERSE REBARS ARE DETAILED WITH A SPLICE LAP. AT THE CONTRACTOR'S OPTION, THIS LAP MAY BE ELIMINATED BY FURNISHING FULL LENGTH BARS WITH NO REDUCTION IN PAY WEIGHT FOR SAME.

REVISED 09-14 - CHANGED REFERENCE TO THE BARRIER RAIL & OPEN RAIL TO THE J40-14 STANDARDS INSTEAD OF J40-06 STANDARDS.
REVISED 03-2016 - REVISION FOR ADDITION OF PAVING NOTCH BAR 8u1.
REVISED 04-2016 - REVISION TO INCLUDE PAVING NOTCH BAR 8u1 WEIGHT IN ESTIMATED QUANTITIES TABLE.

04-2016
LATEST REVISION DATE

APPROVED BY BRIDGE ENGINEER

IOWA DOT Highway Division

STANDARD DESIGN - 40' ROADWAY, 3 SPAN BRIDGES
CONTINUOUS CONCRETE SLAB BRIDGES
JULY, 2014

SUPERSTRUCTURE DETAILS
100'-0 BRIDGE

J40-09-14

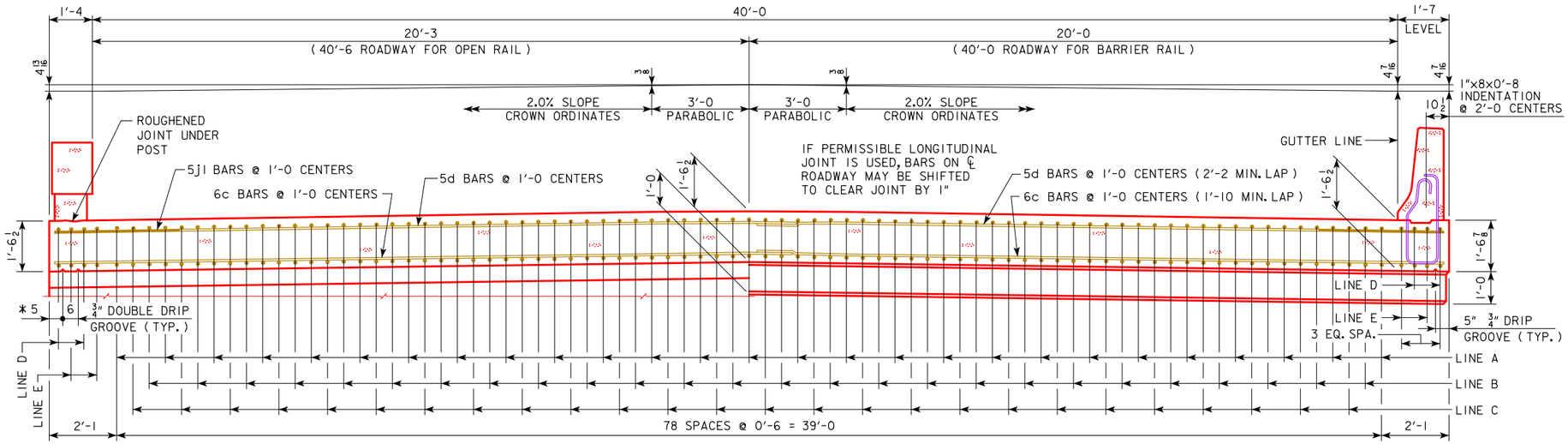

* NOTE: DOUBLE DRIP GROOVES FOR OPEN RAIL OPTION ONLY.

HALF SECTION NEAR ABUTMENT

SLAB CROSS-SECTIONAL AREA FOR OPEN RAIL = 66.55 SQ. FT.

HALF SECTION NEAR PIER

SLAB CROSS-SECTIONAL AREA FOR BARRIER RAIL = 66.60 SQ. FT.

NOTE: TOP LONGITUDINAL REINFORCING STEEL IS TO BE PARALLEL TO AND 2½" CLEAR BELOW TOP OF SLAB. BOTTOM LONGITUDINAL REINFORCING STEEL IS TO BE PARALLEL TO AND 1½" CLEAR ABOVE BOTTOM OF SLAB. REINFORCING STEEL IS TO BE SECURELY WIRED IN PLACE AND ADEQUATELY SUPPORTED ON BAR CHAIRS BEFORE CONCRETE IS POURED. I.M. 451.01 REQUIREMENTS SHALL APPLY FOR BAR CHAIRS.

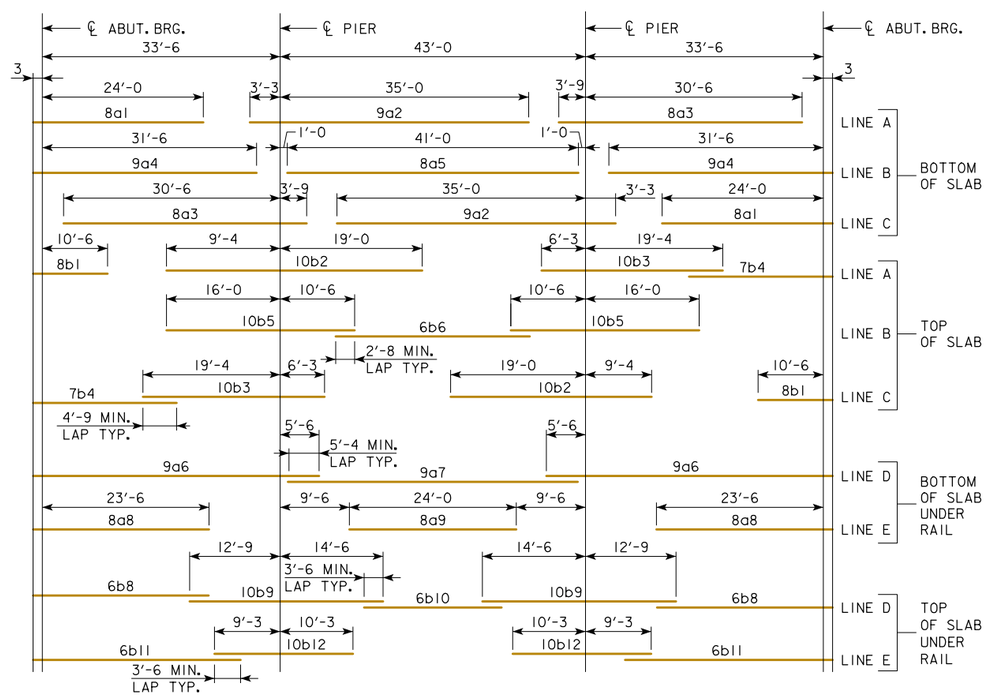

PLACEMENT FOR LONGITUDINAL REINFORCEMENT

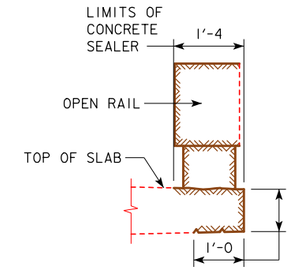

CONCRETE SEALER LIMITS FOR OPEN RAILS

CONCRETE SEALER SHALL BE APPLIED TO BOTH SIDES OF BRIDGE SLAB ON THE TOP, EDGE OF SLAB AND UNDER THE SLAB. THE CONCRETE SEALER SHALL ALSO BE APPLIED TO THE OPEN RAIL ON THE TOP, TRAFFIC FACE SIDE, BOTTOM OF RAIL, AND ON ALL SIDES OF THE OPEN RAIL POSTS.

THE CONCRETE SEALER LIMITS ARE SHOWN IN THE DETAIL AND SHALL APPLY TO THE FULL LENGTH OF BRIDGE. CONCRETE SEALER SHALL BE APPLIED IN ACCORDANCE WITH ARTICLE 2403.03, P, 3 OF THE STANDARD SPECIFICATIONS.

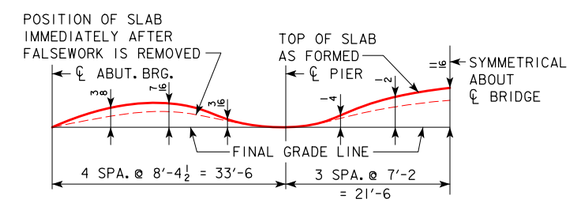

FORM CAMBER DIAGRAM

THIS DIAGRAM SHOWS THE FORM CAMBER REQUIRED TO COMPENSATE FOR THE ANTICIPATED ULTIMATE DEAD LOAD DEFLECTION. THE ABOVE DIMENSIONS DO NOT INCLUDE ANY ALLOWANCE FOR FORM DEFLECTION OR FALSEWORK SETTLEMENT.

LATEST REVISION DATE

APPROVED BY BRIDGE ENGINEER

IOWA DOT Highway Division

STANDARD DESIGN - 40' ROADWAY, 3 SPAN BRIDGES

CONTINUOUS CONCRETE SLAB BRIDGES

JULY, 2014

SUPERSTRUCTURE DETAILS
110'-0 BRIDGE

J40-10-14

BILL OF REINFORCING STEEL FOR SUPERSTRUCTURE - 110' BRIDGE

LOCATION \ SKEW	SHAPE	BAR	0° NO.	0° LENGTH	0° WEIGHT	15° NO.	15° LENGTH	15° WEIGHT	30° NO.	30° LENGTH	30° WEIGHT	45° NO.	45° LENGTH	45° WEIGHT
SLAB LONGITUDINAL BOTTOM		8a1	53	24'-3	3432	53	24'-3	3432	53	24'-3	3432	53	24'-3	3432
SLAB LONGITUDINAL BOTTOM		9a2	53	38'-3	6893	53	38'-3	6893	53	38'-3	6893	53	38'-3	6893
SLAB LONGITUDINAL BOTTOM		8a3	53	34'-3	4847	53	34'-3	4847	53	34'-3	4847	53	34'-3	4847
SLAB LONGITUDINAL BOTTOM		9a4	52	31'-9	5614	52	31'-9	5614	52	31'-9	5614	52	31'-9	5614
SLAB LONGITUDINAL BOTTOM		8a5	26	41'-0	2847	26	41'-0	2847	26	41'-0	2847	26	41'-0	2847
SLAB LONGITUDINAL BOTTOM, AT RAIL		9a6	8	39'-3	1068	8	39'-3	1068	8	39'-3	1068	8	39'-3	1068
SLAB LONGITUDINAL BOTTOM, AT RAIL		9a7	4	42'-8	581	4	42'-8	581	4	42'-8	581	4	42'-8	581
SLAB LONGITUDINAL BOTTOM, AT RAIL		8a8	8	23'-9	508	8	23'-9	508	8	23'-9	508	8	23'-9	508
SLAB LONGITUDINAL BOTTOM, AT RAIL		8a9	4	24'-0	257	4	24'-0	257	4	24'-0	257	4	24'-0	257
SLAB LONGITUDINAL TOP		8b1	53	13'-0	1840	53	13'-0	1840	53	13'-0	1840	53	13'-0	1840
SLAB LONGITUDINAL TOP		10b2	53	28'-4	6462	53	28'-4	6462	53	28'-4	6462	53	28'-4	6462
SLAB LONGITUDINAL TOP		10b3	53	25'-7	5835	53	25'-7	5835	53	25'-7	5835	53	25'-7	5835
SLAB LONGITUDINAL TOP		7b4	53	21'-5	2321	53	21'-5	2321	53	21'-5	2321	53	21'-5	2321
SLAB LONGITUDINAL TOP		10b5	52	26'-6	5930	52	26'-6	5930	52	26'-6	5930	52	26'-6	5930
SLAB LONGITUDINAL TOP		6b6	26	27'-4	1068	26	27'-4	1068	26	27'-4	1068	26	27'-4	1068
SLAB LONGITUDINAL TOP, AT RAIL		6b8	8	26'-9	322	8	26'-9	322	8	26'-9	322	8	26'-9	322
SLAB LONGITUDINAL TOP, AT RAIL		10b9	8	27'-3	939	8	27'-3	939	8	27'-3	939	8	27'-3	939
SLAB LONGITUDINAL TOP, AT RAIL		6b10	4	21'-0	127	4	21'-0	127	4	21'-0	127	4	21'-0	127
SLAB LONGITUDINAL TOP, AT RAIL		6b11	8	30'-3	364	8	30'-3	364	8	30'-3	364	8	30'-3	364
SLAB LONGITUDINAL TOP, AT RAIL		10b12	8	19'-6	672	8	19'-6	672	8	19'-6	672	8	19'-6	672
SLAB TRANSVERSE BOTTOM		6c1	107	23'-5	3764	107	24'-3	3898	98	23'-5	3447	88	23'-5	3096
SLAB TRANSVERSE BOTTOM		6c2	107	21'-3	3416	107	22'-0	3536	99	21'-3	3160	91	21'-3	2905
SLAB TRANSVERSE ENDS, BOTTOM		6c3	-	-	-	-	-	-	12	VARIES	223	20	VARIES	411
SLAB TRANSVERSE ENDS, BOTTOM		6c4	-	-	-	-	-	-	11	VARIES	219	20	VARIES	386
SLAB TRANSVERSE ENDS, BOTTOM		6c5	-	-	-	-	-	-	11	VARIES	176	18	VARIES	302
SLAB TRANSVERSE ENDS, BOTTOM		6c6	-	-	-	-	-	-	11	VARIES	190	17	VARIES	311
SLAB TRANSVERSE TOP		5d1	107	23'-9	2651	107	24'-7	2744	98	23'-9	2428	88	23'-9	2180
SLAB TRANSVERSE TOP		5d2	107	21'-3	2372	107	22'-0	2456	99	21'-3	2195	91	21'-3	2017
SLAB TRANSVERSE ENDS, TOP		5d3	-	-	-	-	-	-	12	VARIES	155	20	VARIES	286
SLAB TRANSVERSE ENDS, TOP		5d4	-	-	-	-	-	-	11	VARIES	152	20	VARIES	268
SLAB TRANSVERSE ENDS, TOP		5d5	-	-	-	-	-	-	11	VARIES	122	18	VARIES	210
SLAB TRANSVERSE ENDS, TOP		5d6	-	-	-	-	-	-	11	VARIES	132	17	VARIES	216
SLAB, TRANSVERSE AT ABUTMENT		8e1	18	26'-4	1266	18	27'-1	1302	18	29'-6	1418	18	34'-8	1667
SLAB, TRANSVERSE AT ABUTMENT		8e2	18	21'-4	1026	18	22'-0	1058	18	24'-5	1174	18	29'-7	1422
SLAB, HAIRPINS, AT ABUTMENT		6e3	92	5'-0	691	92	5'-1	703	92	5'-5	749	92	6'-1	841
SLAB, DIAGONALS, AT ABUTMENT		6e4	92	5'-11	818	92	5'-11	818	92	5'-11	818	92	5'-11	818
PIER CAP HOOPS		5h1	66	7'-7	523	66	7'-7	523	88	7'-7	697	88	7'-7	697
PIER CAP ENDS		8h2	4	14'-5	154	4	14'-5	154	4	14'-5	154	4	14'-5	154
PIER CAP, BOTTOM LONGITUDINAL		8h3	8	25'-5	543	8	26'-7	568	8	29'-4	627	8	35'-0	748
PIER CAP, BOTTOM LONGITUDINAL		8h4	8	19'-11	426	8	20'-3	433	8	22'-2	474	8	26'-10	574
PIER CAP, TOP LONGITUDINAL		8h5	4	26'-2	280	4	27'-5	293	4	30'-4	324	4	36'-1	386
PIER CAP, TOP LONGITUDINAL		8h6	4	21'-5	229	4	21'-10	234	4	23'-11	256	4	28'-8	307
TOP OF SLAB, TRANSVERSE, AT RAIL		5j1	212	8'-6	1880	212	8'-6	1880	202	8'-6	1791	196	8'-6	1738
WING, VERTICAL		5m1	40	4'-5	185	40	4'-5	185	40	4'-5	185	40	4'-5	185
WING, HORIZONTAL BACK FACE		5n1	24	6'-8	167	24	6'-8	167	24	6'-8	167	24	6'-8	167
WING, HORIZONTAL TRAFFIC FACE		5n3	24	6'-9	169	24	6'-9	169	24	6'-9	169	24	6'-9	169
SUB EPOXY COATED TOTAL - LBS.					72,487			73,048			73,529			74,388
BARRIER RAIL - SEE LIST ON RAIL SHEET J40-46-14					4504			4504			4504			4504
OPEN RAIL - SEE LIST ON RAIL SHEET J40-49-14					4770			4770			4770			4770
EPOXY COATED RAIL TOTAL - LBS. WITH MONOLITHIC PIER CAP		WITH BARRIER RAIL			76,991			77,552			78,033			78,892
		WITH OPEN RAIL			77,257			77,818			78,299			79,158
EPOXY COATED RAIL TOTAL - LBS. WITH NON-MONOLITHIC PIER CAP		WITH BARRIER RAIL			74,836			75,347			75,501			76,026
SAME AS ABOVE EXCEPT ALL "h" BARS DELETED		WITH OPEN RAIL			75,102			75,613			75,767			76,292
STAINLESS STEEL RAIL TOTAL - LBS.		WITH BARRIER RAIL			2458			2458			2458			2458
		WITH OPEN RAIL			2491			2491			2491			2491

ESTIMATED QUANTITIES FOR SUPERSTRUCTURE - 110' BRIDGE

ITEM		SKEW	WITH MONOLITHIC PIER CAP 0°	15°	30°	45°	WITH NON-MONOLITHIC PIER CAP 0°	15°	30°	45°
WITH BARRIER RAIL	* STRUCTURAL CONCRETE (BRIDGE)	C.Y.	302.5	303.5	306.8	314.0	296.4	297.2	299.9	305.6
	REINF. STEEL EPOXY COATED	LBS.	76,991	77,552	78,033	78,892	74,836	75,347	75,501	76,026
	Δ REINF. STEEL STAINLESS STEEL	LBS.	2681	2681	2681	2681	2681	2681	2681	2681
CONCRETE BARRIER OR OPEN RAIL		LIN. FT.	242.0	242.2	242.9	244.5	242.0	242.2	242.9	244.5
WITH OPEN RAIL	* STRUCTURAL CONCRETE (BRIDGE)	C.Y.	302.3	303.2	306.6	313.8	296.2	297.0	299.7	305.4
	REINF. STEEL EPOXY COATED	LBS.	77,257	77,818	78,299	79,158	75,102	75,613	75,767	76,292
	Δ REINF. STEEL STAINLESS STEEL	LBS.	2714	2714	2714	2714	2714	2714	2714	2714

* INCLUDES 4 WINGS @ 0.68 C.Y. EACH; EXCLUDES RAIL CONCRETE.
Δ INCLUDES ABUTMENT PAVING NOTCH BAR WEIGHT.

BENT BAR DETAILS

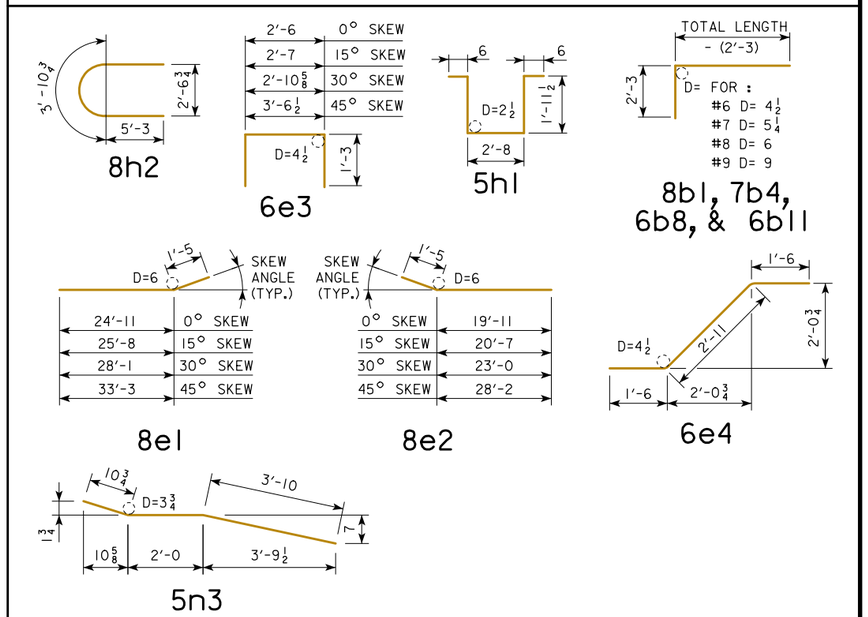

NOTE: ALL DIMENSIONS ARE OUT TO OUT. D = PIN DIAMETER.

STAINLESS STEEL REINFORCING FOR SUPERSTRUCTURE - BRIDGE

LOCATION \ ALL SKEWS	SHAPE	BAR	NO.	LENGTH	WEIGHT
ABUTMENT PAVING NOTCH BAR		8u1	40	2'-1	223

8u1 BARS SHALL BE PAID FOR UNDER THE BID ITEM "REINFORCING STEEL, STAINLESS STEEL". WEIGHT = LBS.

NOTES:
ALL BARRIER RAIL REINFORCING STEEL IS TO BE EITHER EPOXY COATED OR STAINLESS STEEL AS SHOWN OR NOTED. THE STAINLESS STEEL REINFORCING STEEL SHALL BE DEFORMED BAR GRADE 60 MEETING THE REQUIREMENTS OF MATERIALS I.M.452.

ALL OTHER REINFORCING STEEL IS TO BE EPOXY COATED.

THE TRANSVERSE REBARS ARE DETAILED WITH A SPLICE LAP. AT THE CONTRACTOR'S OPTION, THIS LAP MAY BE ELIMINATED BY FURNISHING FULL LENGTH BARS WITH NO REDUCTION IN PAY WEIGHT FOR SAME.

REVISED 09-14 - CHANGED REFERENCE TO THE BARRIER RAIL & OPEN RAIL TO THE J40-14 STANDARDS INSTEAD OF J40-06 STANDARDS.
REVISED 03-2016 - REVISION FOR ADDITION OF PAVING NOTCH BAR 8u1.
REVISED 04-2016 - REVISION TO INCLUDE PAVING NOTCH BAR 8u1 WEIGHT IN ESTIMATED QUANTITIES TABLE.

04-2016
LATEST REVISION DATE

APPROVED BY BRIDGE ENGINEER

IOWA DOT Highway Division

STANDARD DESIGN - 40' ROADWAY, 3 SPAN BRIDGES
CONTINUOUS CONCRETE SLAB BRIDGES
JULY, 2014

SUPERSTRUCTURE DETAILS
110'-0 BRIDGE

J40-11-14

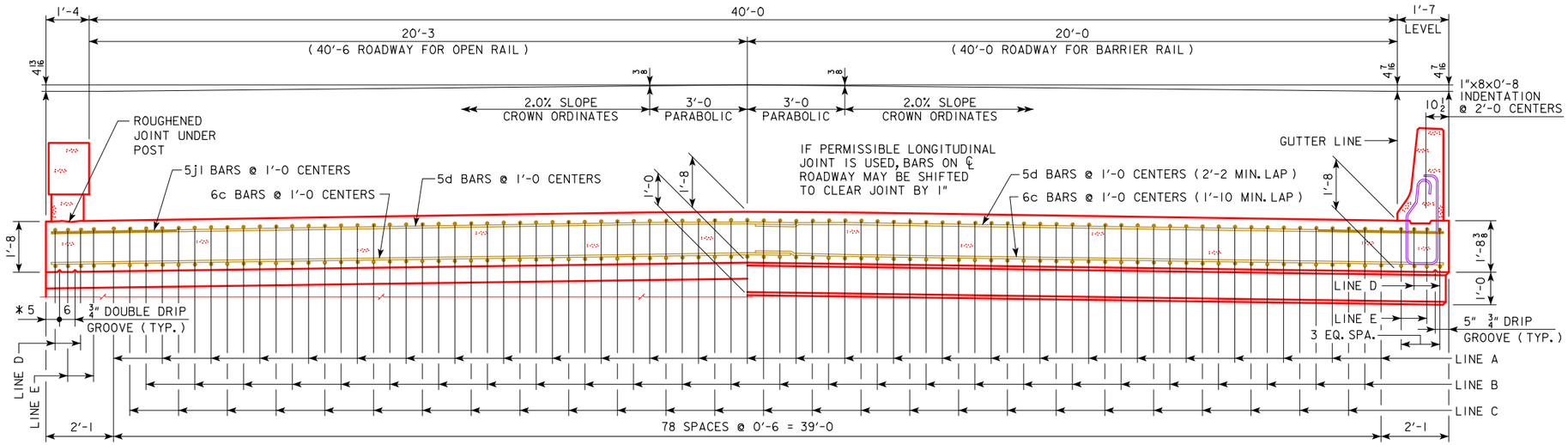

* NOTE: DOUBLE DRIP GROOVES FOR OPEN RAIL OPTION ONLY.

HALF SECTION NEAR ABUTMENT

SLAB CROSS-SECTIONAL AREA FOR OPEN RAIL = 71.94 SQ. FT.

HALF SECTION NEAR PIER

SLAB CROSS-SECTIONAL AREA FOR BARRIER RAIL = 71.99 SQ. FT.

NOTE: TOP LONGITUDINAL REINFORCING STEEL IS TO BE PARALLEL TO AND 2½" CLEAR BELOW TOP OF SLAB. BOTTOM LONGITUDINAL REINFORCING STEEL IS TO BE PARALLEL TO AND 1½" CLEAR ABOVE BOTTOM OF SLAB. REINFORCING STEEL IS TO BE SECURELY WIRED IN PLACE AND ADEQUATELY SUPPORTED ON BAR CHAIRS BEFORE CONCRETE IS POURED. I.M. 451.01 REQUIREMENTS SHALL APPLY FOR BAR CHAIRS.

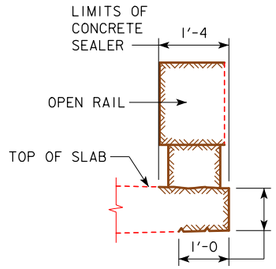

CONCRETE SEALER LIMITS FOR OPEN RAILS

CONCRETE SEALER SHALL BE APPLIED TO BOTH SIDES OF BRIDGE SLAB ON THE TOP, EDGE OF SLAB AND UNDER THE SLAB. THE CONCRETE SEALER SHALL ALSO BE APPLIED TO THE OPEN RAIL ON THE TOP, TRAFFIC FACE SIDE, BOTTOM OF RAIL, AND ON ALL SIDES OF THE OPEN RAIL POSTS.

THE CONCRETE SEALER LIMITS ARE SHOWN IN THE DETAIL AND SHALL APPLY TO THE FULL LENGTH OF BRIDGE. CONCRETE SEALER SHALL BE APPLIED IN ACCORDANCE WITH ARTICLE 2403.03, P, 3 OF THE STANDARD SPECIFICATIONS.

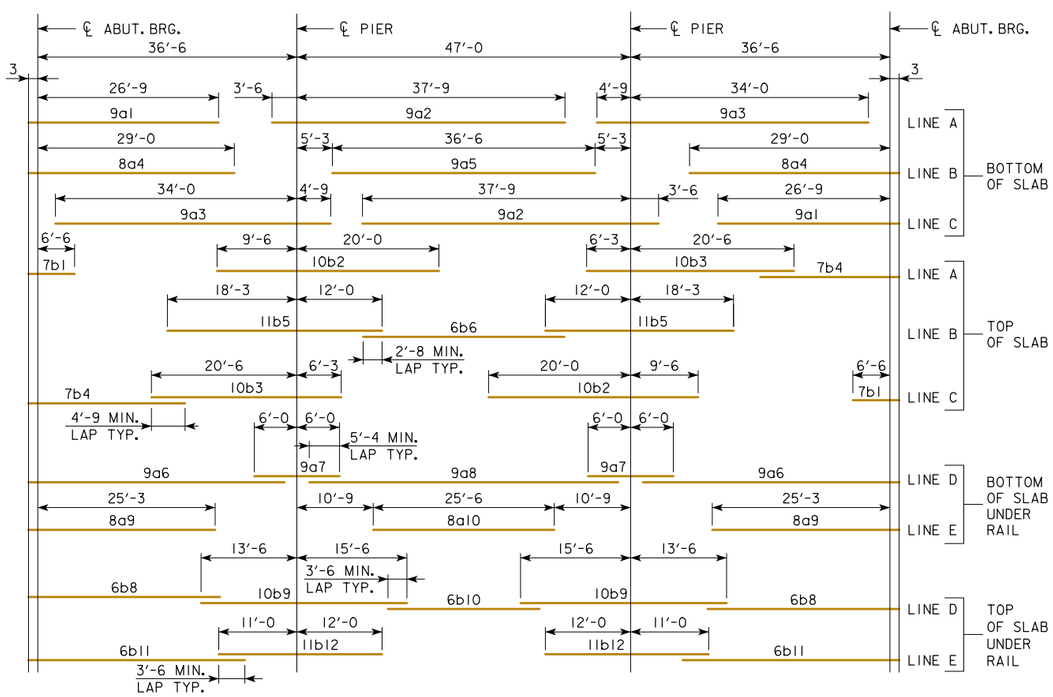

PLACEMENT FOR LONGITUDINAL REINFORCEMENT

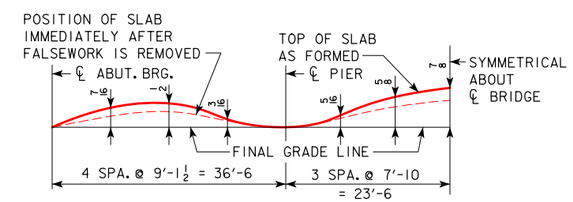

FORM CAMBER DIAGRAM

THIS DIAGRAM SHOWS THE FORM CAMBER REQUIRED TO COMPENSATE FOR THE ANTICIPATED ULTIMATE DEAD LOAD DEFLECTION. THE ABOVE DIMENSIONS DO NOT INCLUDE ANY ALLOWANCE FOR FORM DEFLECTION OR FALSEWORK SETTLEMENT.

LATEST REVISION DATE

APPROVED BY BRIDGE ENGINEER

IOWA DOT Highway Division

STANDARD DESIGN - 40' ROADWAY, 3 SPAN BRIDGES

CONTINUOUS CONCRETE SLAB BRIDGES

JULY, 2014

SUPERSTRUCTURE DETAILS
120'-0 BRIDGE

J40-12-14

BILL OF REINFORCING STEEL FOR SUPERSTRUCTURE - 120' BRIDGE

LOCATION \ SKEW	SHAPE	BAR	0° NO.	0° LENGTH	0° WEIGHT	15° NO.	15° LENGTH	15° WEIGHT	30° NO.	30° LENGTH	30° WEIGHT	45° NO.	45° LENGTH	45° WEIGHT
SLAB LONGITUDINAL BOTTOM		9a1	53	27'-0	4866	53	27'-0	4866	53	27'-0	4866	53	27'-0	4866
SLAB LONGITUDINAL BOTTOM		9a2	53	41'-3	7434	53	41'-3	7434	53	41'-3	7434	53	41'-3	7434
SLAB LONGITUDINAL BOTTOM		9a3	53	38'-9	6983	53	38'-9	6983	53	38'-9	6983	53	38'-9	6983
SLAB LONGITUDINAL BOTTOM		8a4	52	29'-3	4062	52	29'-3	4062	52	29'-3	4062	52	29'-3	4062
SLAB LONGITUDINAL BOTTOM		9a5	26	36'-6	3227	26	36'-6	3227	26	36'-6	3227	26	36'-6	3227
SLAB LONGITUDINAL BOTTOM, AT RAIL		9a6	8	36'-1	982	8	36'-1	982	8	36'-1	982	8	36'-1	982
SLAB LONGITUDINAL BOTTOM, AT RAIL		9a7	8	12'-0	327	8	12'-0	327	8	12'-0	327	8	12'-0	327
SLAB LONGITUDINAL BOTTOM, AT RAIL		9a8	4	45'-8	622	4	45'-8	622	4	45'-8	622	4	45'-8	622
SLAB LONGITUDINAL BOTTOM, AT RAIL		8a9	8	25'-6	545	8	25'-6	545	8	25'-6	545	8	25'-6	545
SLAB LONGITUDINAL BOTTOM, AT RAIL		8a10	4	25'-6	273	4	25'-6	273	4	25'-6	273	4	25'-6	273
SLAB LONGITUDINAL TOP		7b1	53	9'-0	975	53	9'-0	975	53	9'-0	975	53	9'-0	975
SLAB LONGITUDINAL TOP		10b2	53	29'-6	6728	53	29'-6	6728	53	29'-6	6728	53	29'-6	6728
SLAB LONGITUDINAL TOP		10b3	53	26'-9	6101	53	26'-9	6101	53	26'-9	6101	53	26'-9	6101
SLAB LONGITUDINAL TOP		7b4	53	23'-3	2519	53	23'-3	2519	53	23'-3	2519	53	23'-3	2519
SLAB LONGITUDINAL TOP		11b5	52	30'-3	8358	52	30'-3	8358	52	30'-3	8358	52	30'-3	8358
SLAB LONGITUDINAL TOP		6b6	26	28'-4	1107	26	28'-4	1107	26	28'-4	1107	26	28'-4	1107
SLAB LONGITUDINAL TOP, AT RAIL		6b8	8	29'-0	349	8	29'-0	349	8	29'-0	349	8	29'-0	349
SLAB LONGITUDINAL TOP, AT RAIL		10b9	8	29'-0	999	8	29'-0	999	8	29'-0	999	8	29'-0	999
SLAB LONGITUDINAL TOP, AT RAIL		6b10	4	23'-0	139	4	23'-0	139	4	23'-0	139	4	23'-0	139
SLAB LONGITUDINAL TOP, AT RAIL		6b11	8	31'-6	379	8	31'-6	379	8	31'-6	379	8	31'-6	379
SLAB LONGITUDINAL TOP, AT RAIL		11b12	8	23'-0	978	8	23'-0	978	8	23'-0	978	8	23'-0	978
SLAB TRANSVERSE BOTTOM		6c1	117	23'-5	4116	117	24'-3	4262	108	23'-5	3799	98	23'-5	3447
SLAB TRANSVERSE BOTTOM		6c2	117	21'-3	3735	117	22'-0	3867	109	21'-3	3480	101	21'-3	3224
SLAB TRANSVERSE ENDS, BOTTOM		6c3	-	-	-	-	-	-	12	VARIES	223	20	VARIES	411
SLAB TRANSVERSE ENDS, BOTTOM		6c4	-	-	-	-	-	-	11	VARIES	219	20	VARIES	386
SLAB TRANSVERSE ENDS, BOTTOM		6c5	-	-	-	-	-	-	11	VARIES	176	18	VARIES	302
SLAB TRANSVERSE ENDS, BOTTOM		6c6	-	-	-	-	-	-	11	VARIES	190	17	VARIES	311
SLAB TRANSVERSE TOP		5d1	117	23'-9	2899	117	24'-7	3000	108	23'-9	2676	98	23'-9	2428
SLAB TRANSVERSE TOP		5d2	117	21'-3	2594	117	22'-0	2685	109	21'-3	2416	101	21'-3	2239
SLAB TRANSVERSE ENDS, TOP		5d3	-	-	-	-	-	-	12	VARIES	155	20	VARIES	286
SLAB TRANSVERSE ENDS, TOP		5d4	-	-	-	-	-	-	11	VARIES	152	20	VARIES	268
SLAB TRANSVERSE ENDS, TOP		5d5	-	-	-	-	-	-	11	VARIES	122	18	VARIES	210
SLAB TRANSVERSE ENDS, TOP		5d6	-	-	-	-	-	-	11	VARIES	132	17	VARIES	216
SLAB, TRANSVERSE AT ABUTMENT		8e1	18	26'-4	1266	18	27'-1	1302	18	29'-6	1418	18	34'-8	1667
SLAB, TRANSVERSE AT ABUTMENT		8e2	18	21'-4	1026	18	22'-0	1058	18	24'-5	1174	18	29'-7	1422
SLAB, HAIRPINS, AT ABUTMENT		6e3	92	5'-0	691	92	5'-1	703	92	5'-5	749	92	6'-1	841
SLAB, DIAGONALS, AT ABUTMENT		6e4	92	5'-11	818	92	5'-11	818	92	5'-11	818	92	5'-11	818
PIER CAP HOOPS		5h1	52	7'-10	425	52	7'-10	425	78	7'-10	638	104	7'-10	850
PIER CAP ENDS		8h2	4	14'-5	154	4	14'-5	154	4	14'-5	154	4	14'-5	154
PIER CAP, BOTTOM LONGITUDINAL		8h3	8	25'-5	543	8	26'-7	568	8	29'-4	627	8	35'-0	748
PIER CAP, BOTTOM LONGITUDINAL		8h4	8	19'-11	426	8	20'-3	433	8	22'-2	474	8	26'-10	574
PIER CAP, TOP LONGITUDINAL		8h5	4	26'-2	280	4	27'-5	293	4	30'-4	324	4	36'-1	386
PIER CAP, TOP LONGITUDINAL		8h6	4	21'-5	229	4	21'-10	234	4	23'-11	256	4	28'-8	307
TOP OF SLAB, TRANSVERSE, AT RAIL		5j1	232	8'-6	2057	232	8'-6	2057	222	8'-6	1969	216	8'-6	1915
WING, VERTICAL		5m1	40	4'-5	185	40	4'-5	185	40	4'-5	185	40	4'-5	185
WING, HORIZONTAL BACK FACE		5n1	24	6'-8	167	24	6'-8	167	24	6'-8	167	24	6'-8	167
WING, HORIZONTAL TRAFFIC FACE		5n3	24	6'-9	169	24	6'-9	169	24	6'-9	169	24	6'-9	169
SUB EPOXY COATED TOTAL - LBS.					79,733			80,333			80,815			81,884
BARRIER RAIL - SEE LIST ON RAIL SHEET J40-46-14					4860			4860			4860			4860
OPEN RAIL - SEE LIST ON RAIL SHEET J40-49-14					5304			5304			5304			5304
EPOXY COATED RAIL TOTAL - LBS. WITH MONOLITHIC PIER CAP		WITH BARRIER RAIL			84,593			85,193			85,675			86,744
		WITH OPEN RAIL			85,037			85,637			86,119			87,188
EPOXY COATED RAIL TOTAL - LBS. WITH NON-MONOLITHIC PIER CAP		WITH BARRIER RAIL			82,536			83,086			83,202			83,725
SAME AS ABOVE EXCEPT ALL "h" BARS DELETED		WITH OPEN RAIL			82,980			83,530			83,646			84,169
STAINLESS STEEL RAIL TOTAL - LBS.		WITH BARRIER RAIL			2676			2676			2676			2676
		WITH OPEN RAIL			2757			2757			2757			2757

ESTIMATED QUANTITIES FOR SUPERSTRUCTURE - 120' BRIDGE

ITEM		SKEW	WITH MONOLITHIC PIER CAP 0°	15°	30°	45°	WITH NON-MONOLITHIC PIER CAP 0°	15°	30°	45°
WITH BARRIER RAIL	* STRUCTURAL CONCRETE (BRIDGE)	C.Y.	350.5	351.5	354.7	361.8	344.5	345.2	347.8	353.4
	REINF. STEEL EPOXY COATED	LBS.	84,593	85,193	85,675	86,744	82,536	83,086	83,202	83,725
	Δ REINF. STEEL STAINLESS STEEL	LBS.	2899	2899	2899	2899	2899	2899	2899	2899
CONCRETE BARRIER OR OPEN RAIL		LIN. FT.	262.0	262.2	262.9	264.5	262.0	262.2	262.9	264.5
WITH OPEN RAIL	* STRUCTURAL CONCRETE (BRIDGE)	C.Y.	350.3	351.2	354.5	361.6	344.3	345.0	347.6	353.2
	REINF. STEEL EPOXY COATED	LBS.	85,037	85,637	86,119	87,188	82,980	83,530	83,646	84,169
	Δ REINF. STEEL STAINLESS STEEL	LBS.	2980	2980	2980	2980	2980	2980	2980	2980

* INCLUDES 4 WINGS @ 0.68 C.Y. EACH; EXCLUDES RAIL CONCRETE.
Δ INCLUDES ABUTMENT PAVING NOTCH BAR WEIGHT.

BENT BAR DETAILS

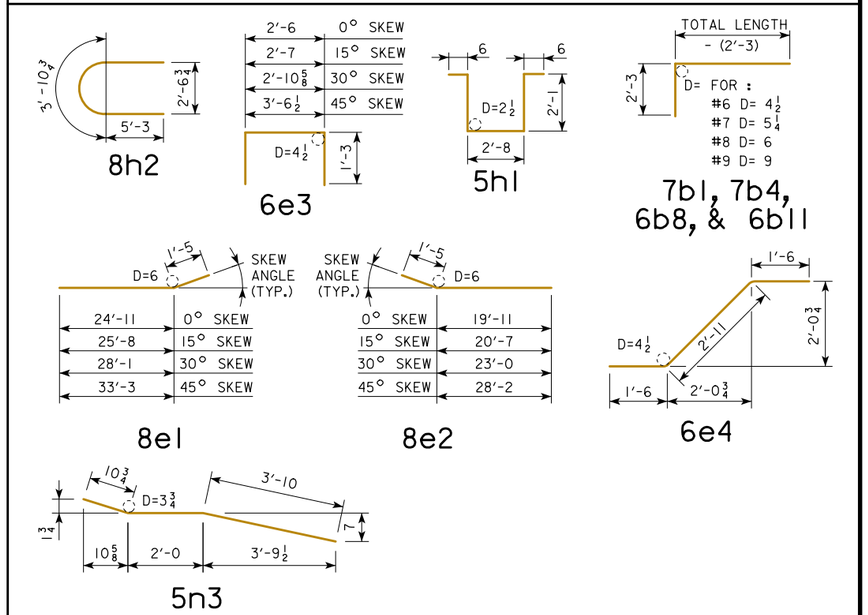

NOTE: ALL DIMENSIONS ARE OUT TO OUT. D = PIN DIAMETER.

STAINLESS STEEL REINFORCING FOR SUPERSTRUCTURE - BRIDGE

LOCATION \ ALL SKEWS	SHAPE	BAR	NO.	LENGTH	WEIGHT
ABUTMENT PAVING NOTCH BAR		8u1	40	2'-1	223

8u1 BARS SHALL BE PAID FOR UNDER THE BID ITEM "REINFORCING STEEL, STAINLESS STEEL". WEIGHT = LBS.

NOTES:
ALL BARRIER RAIL REINFORCING STEEL IS TO BE EITHER EPOXY COATED OR STAINLESS STEEL AS SHOWN OR NOTED. THE STAINLESS STEEL REINFORCING STEEL SHALL BE DEFORMED BAR GRADE 60 MEETING THE REQUIREMENTS OF MATERIALS I.M.452.

ALL OTHER REINFORCING STEEL IS TO BE EPOXY COATED.

THE TRANSVERSE REBARS ARE DETAILED WITH A SPLICE LAP. AT THE CONTRACTOR'S OPTION, THIS LAP MAY BE ELIMINATED BY FURNISHING FULL LENGTH BARS WITH NO REDUCTION IN PAY WEIGHT FOR SAME.

REVISED 09-14 - CHANGED REFERENCE TO THE BARRIER RAIL & OPEN RAIL TO THE J40-14 STANDARDS INSTEAD OF J40-06 STANDARDS.
REVISED 03-2016 - REVISION FOR ADDITION OF PAVING NOTCH BAR 8u1.
REVISED 04-2016 - REVISION TO INCLUDE PAVING NOTCH BAR 8u1 WEIGHT IN ESTIMATED QUANTITIES TABLE.

04-2016
LATEST REVISION DATE

APPROVED BY BRIDGE ENGINEER

IOWA DOT Highway Division

STANDARD DESIGN - 40' ROADWAY, 3 SPAN BRIDGES
CONTINUOUS CONCRETE SLAB BRIDGES
JULY, 2014

SUPERSTRUCTURE DETAILS
120'-0 BRIDGE

J40-13-14

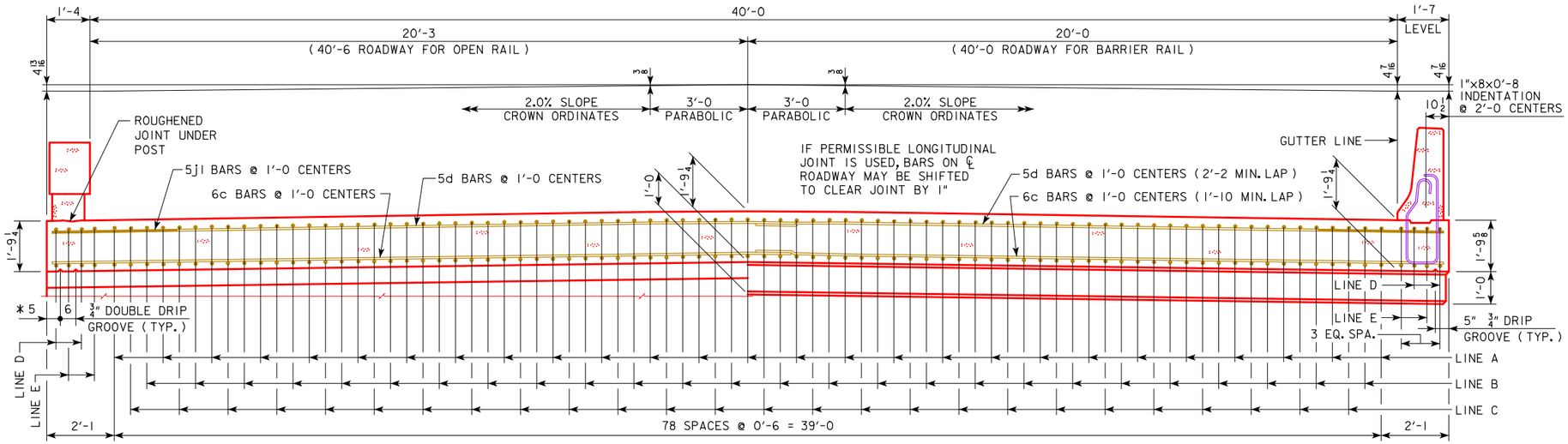

* NOTE: DOUBLE DRIP GROOVES FOR OPEN RAIL OPTION ONLY.

HALF SECTION NEAR ABUTMENT

SLAB CROSS-SECTIONAL AREA FOR OPEN RAIL = 76.44 SQ. FT.

HALF SECTION NEAR PIER

SLAB CROSS-SECTIONAL AREA FOR BARRIER RAIL = 76.49 SQ. FT.

NOTE: TOP LONGITUDINAL REINFORCING STEEL IS TO BE PARALLEL TO AND 2 1/2" CLEAR BELOW TOP OF SLAB. BOTTOM LONGITUDINAL REINFORCING STEEL IS TO BE PARALLEL TO AND 1 1/2" CLEAR ABOVE BOTTOM OF SLAB. REINFORCING STEEL IS TO BE SECURELY WIRED IN PLACE AND ADEQUATELY SUPPORTED ON BAR CHAIRS BEFORE CONCRETE IS POURED. I.M. 451.01 REQUIREMENTS SHALL APPLY FOR BAR CHAIRS.

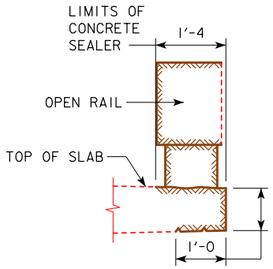

CONCRETE SEALER LIMITS FOR OPEN RAILS

CONCRETE SEALER SHALL BE APPLIED TO BOTH SIDES OF BRIDGE SLAB ON THE TOP, EDGE OF SLAB AND UNDER THE SLAB. THE CONCRETE SEALER SHALL ALSO BE APPLIED TO THE OPEN RAIL ON THE TOP, TRAFFIC FACE SIDE, BOTTOM OF RAIL, AND ON ALL SIDES OF THE OPEN RAIL POSTS.

THE CONCRETE SEALER LIMITS ARE SHOWN IN THE DETAIL AND SHALL APPLY TO THE FULL LENGTH OF BRIDGE. CONCRETE SEALER SHALL BE APPLIED IN ACCORDANCE WITH ARTICLE 2403.03, P, 3 OF THE STANDARD SPECIFICATIONS.

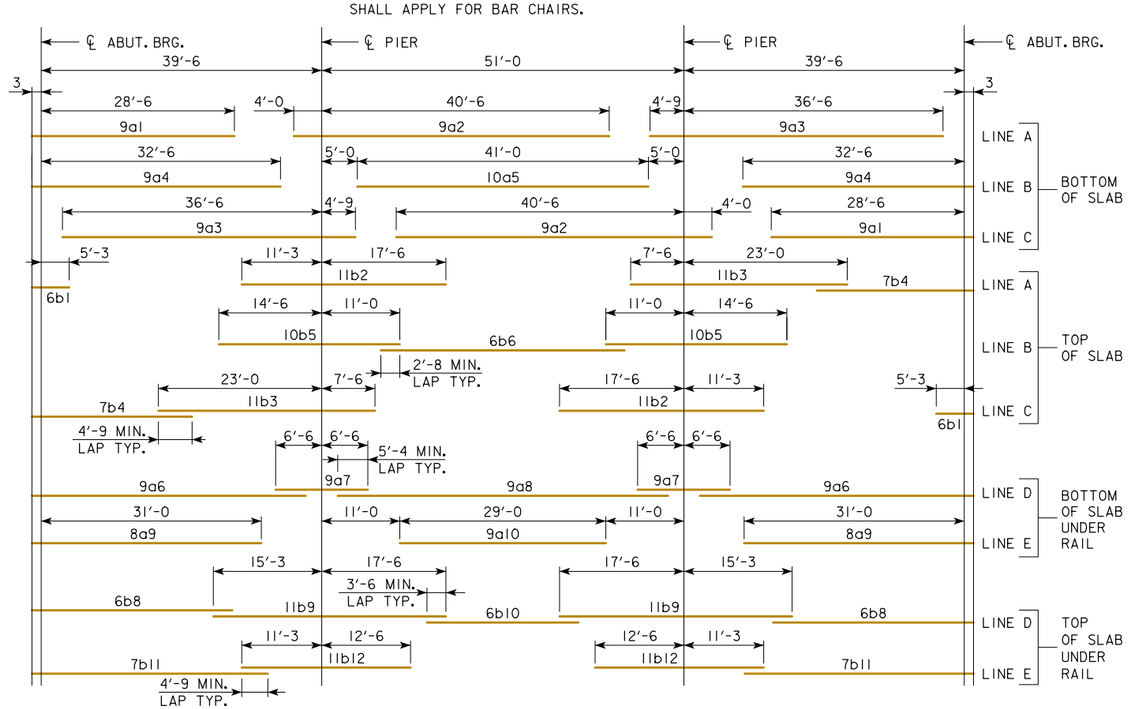

PLACEMENT FOR LONGITUDINAL REINFORCEMENT

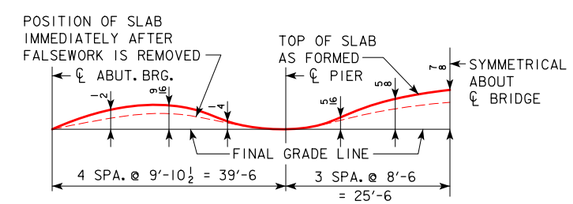

FORM CAMBER DIAGRAM

THIS DIAGRAM SHOWS THE FORM CAMBER REQUIRED TO COMPENSATE FOR THE ANTICIPATED ULTIMATE DEAD LOAD DEFLECTION. THE ABOVE DIMENSIONS DO NOT INCLUDE ANY ALLOWANCE FOR FORM DEFLECTION OR FALSEWORK SETTLEMENT.

LATEST REVISION DATE

APPROVED BY BRIDGE ENGINEER

IOWA DOT Highway Division

STANDARD DESIGN - 40' ROADWAY, 3 SPAN BRIDGES

CONTINUOUS CONCRETE SLAB BRIDGES

JULY, 2014

SUPERSTRUCTURE DETAILS
130'-0 BRIDGE

J40-14-14

BILL OF REINFORCING STEEL FOR SUPERSTRUCTURE - 130' BRIDGE

LOCATION \ SKEW	SHAPE	BAR	0° NO.	0° LENGTH	0° WEIGHT	15° NO.	15° LENGTH	15° WEIGHT	30° NO.	30° LENGTH	30° WEIGHT	45° NO.	45° LENGTH	45° WEIGHT
SLAB LONGITUDINAL BOTTOM		9a1	53	28'-9	5181	53	28'-9	5181	53	28'-9	5181	53	28'-9	5181
SLAB LONGITUDINAL BOTTOM		9a2	53	44'-6	8019	53	44'-6	8019	53	44'-6	8019	53	44'-6	8019
SLAB LONGITUDINAL BOTTOM		9a3	53	41'-3	7434	53	41'-3	7434	53	41'-3	7434	53	41'-3	7434
SLAB LONGITUDINAL BOTTOM		9a4	52	32'-9	5791	52	32'-9	5791	52	32'-9	5791	52	32'-9	5791
SLAB LONGITUDINAL BOTTOM		10a5	26	41'-0	4587	26	41'-0	4587	26	41'-0	4587	26	41'-0	4587
SLAB LONGITUDINAL BOTTOM, AT RAIL		9a6	8	38'-7	1050	8	38'-7	1050	8	38'-7	1050	8	38'-7	1050
SLAB LONGITUDINAL BOTTOM, AT RAIL		9a7	8	13'-0	354	8	13'-0	354	8	13'-0	354	8	13'-0	354
SLAB LONGITUDINAL BOTTOM, AT RAIL		9a8	4	48'-8	662	4	48'-8	662	4	48'-8	662	4	48'-8	662
SLAB LONGITUDINAL BOTTOM, AT RAIL		8a9	8	31'-3	668	8	31'-3	668	8	31'-3	668	8	31'-3	668
SLAB LONGITUDINAL BOTTOM, AT RAIL		9a10	4	29'-0	395	4	29'-0	395	4	29'-0	395	4	29'-0	395
SLAB LONGITUDINAL TOP		6b1	53	7'-9	617	53	7'-9	617	53	7'-9	617	53	7'-9	617
SLAB LONGITUDINAL TOP		11b2	53	28'-9	8096	53	28'-9	8096	53	28'-9	8096	53	28'-9	8096
SLAB LONGITUDINAL TOP		11b3	53	30'-6	8589	53	30'-6	8589	53	30'-6	8589	53	30'-6	8589
SLAB LONGITUDINAL TOP		7b4	53	23'-9	2573	53	23'-9	2573	53	23'-9	2573	53	23'-9	2573
SLAB LONGITUDINAL TOP		10b5	52	25'-6	5706	52	25'-6	5706	52	25'-6	5706	52	25'-6	5706
SLAB LONGITUDINAL TOP		6b6	26	34'-4	1341	26	34'-4	1341	26	34'-4	1341	26	34'-4	1341
SLAB LONGITUDINAL TOP, AT RAIL		6b8	8	30'-3	364	8	30'-3	364	8	30'-3	364	8	30'-3	364
SLAB LONGITUDINAL TOP, AT RAIL		11b9	8	32'-9	1393	8	32'-9	1393	8	32'-9	1393	8	32'-9	1393
SLAB LONGITUDINAL TOP, AT RAIL		6b10	4	23'-0	139	4	23'-0	139	4	23'-0	139	4	23'-0	139
SLAB LONGITUDINAL TOP, AT RAIL		7b11	8	35'-6	581	8	35'-6	581	8	35'-6	581	8	35'-6	581
SLAB LONGITUDINAL TOP, AT RAIL		11b12	8	23'-9	1010	8	23'-9	1010	8	23'-9	1010	8	23'-9	1010
SLAB TRANSVERSE BOTTOM		6c1	127	23'-5	4467	127	24'-3	4626	118	23'-5	4151	108	23'-5	3799
SLAB TRANSVERSE BOTTOM		6c2	127	21'-3	4054	127	22'-0	4197	119	21'-3	3799	111	21'-3	3543
SLAB TRANSVERSE ENDS, BOTTOM		6c3	-	-	-	-	-	-	12	VARIES	223	20	VARIES	411
SLAB TRANSVERSE ENDS, BOTTOM		6c4	-	-	-	-	-	-	11	VARIES	219	20	VARIES	386
SLAB TRANSVERSE ENDS, BOTTOM		6c5	-	-	-	-	-	-	11	VARIES	176	18	VARIES	302
SLAB TRANSVERSE ENDS, BOTTOM		6c6	-	-	-	-	-	-	11	VARIES	190	17	VARIES	311
SLAB TRANSVERSE TOP		5d1	127	23'-9	3146	127	24'-7	3257	118	23'-9	2924	108	23'-9	2676
SLAB TRANSVERSE TOP		5d2	127	21'-3	2815	127	22'-0	2915	119	21'-3	2638	111	21'-3	2461
SLAB TRANSVERSE ENDS, TOP		5d3	-	-	-	-	-	-	12	VARIES	155	20	VARIES	286
SLAB TRANSVERSE ENDS, TOP		5d4	-	-	-	-	-	-	11	VARIES	152	20	VARIES	268
SLAB TRANSVERSE ENDS, TOP		5d5	-	-	-	-	-	-	11	VARIES	122	18	VARIES	210
SLAB TRANSVERSE ENDS, TOP		5d6	-	-	-	-	-	-	11	VARIES	132	17	VARIES	216
SLAB, TRANSVERSE AT ABUTMENT		8e1	18	26'-4	1266	18	27'-1	1302	18	29'-6	1418	18	34'-8	1667
SLAB, TRANSVERSE AT ABUTMENT		8e2	18	21'-4	1026	18	22'-0	1058	18	24'-5	1174	18	29'-7	1422
SLAB, HAIRPINS, AT ABUTMENT		6e3	92	5'-0	691	92	5'-1	703	92	5'-5	749	92	6'-1	841
SLAB, DIAGONALS, AT ABUTMENT		6e4	92	5'-11	818	92	5'-11	818	92	5'-11	818	92	5'-11	818
PIER CAP HOOPS		5h1	84	8'-1	709	84	8'-1	709	84	8'-1	709	112	8'-1	945
PIER CAP ENDS		8h2	4	14'-5	154	4	14'-5	154	4	14'-5	154	4	14'-5	154
PIER CAP, BOTTOM LONGITUDINAL		8h3	8	25'-5	543	8	26'-7	568	8	29'-4	627	8	35'-0	748
PIER CAP, BOTTOM LONGITUDINAL		8h4	8	19'-11	426	8	20'-3	433	8	22'-2	474	8	26'-10	574
PIER CAP, TOP LONGITUDINAL		8h5	4	26'-2	280	4	27'-5	293	4	30'-4	324	4	36'-1	386
PIER CAP, TOP LONGITUDINAL		8h6	4	21'-5	229	4	21'-10	234	4	23'-11	256	4	28'-8	307
TOP OF SLAB, TRANSVERSE, AT RAIL		5j1	252	8'-6	2235	252	8'-6	2235	242	8'-6	2146	236	8'-6	2093
WING, VERTICAL		5m1	40	4'-5	185	40	4'-5	185	40	4'-5	185	40	4'-5	185
WING, HORIZONTAL BACK FACE		5n1	24	6'-8	167	24	6'-8	167	24	6'-8	167	24	6'-8	167
WING, HORIZONTAL TRAFFIC FACE		5n3	24	6'-9	169	24	6'-9	169	24	6'-9	169	24	6'-9	169
SUB EPOXY COATED TOTAL - LBS.					87,930			88,573			88,801			89,895
BARRIER RAIL - SEE LIST ON RAIL SHEET J40-46-14					5172			5172			5172			5172
OPEN RAIL - SEE LIST ON RAIL SHEET J40-49-14					5628			5628			5628			5628
EPOXY COATED RAIL TOTAL - LBS. WITH MONOLITHIC PIER CAP		WITH BARRIER RAIL			93,102			93,745			93,973			95,067
		WITH OPEN RAIL			93,558			94,201			94,429			95,523
EPOXY COATED RAIL TOTAL - LBS. WITH NON-MONOLITHIC PIER CAP		WITH BARRIER RAIL			90,761			91,354			91,429			91,953
SAME AS ABOVE EXCEPT ALL "h" BARS DELETED		WITH OPEN RAIL			91,217			91,810			91,885			92,409
STAINLESS STEEL RAIL TOTAL - LBS.		WITH BARRIER RAIL			2882			2882			2882			2882
		WITH OPEN RAIL			2945			2945			2945			2945

ESTIMATED QUANTITIES FOR SUPERSTRUCTURE - 130' BRIDGE

ITEM		SKEW	WITH MONOLITHIC PIER CAP 0°	15°	30°	45°	WITH NON-MONOLITHIC PIER CAP 0°	15°	30°	45°
WITH BARRIER RAIL	* STRUCTURAL CONCRETE (BRIDGE)	C.Y.	398.3	399.3	402.5	409.4	392.3	393.0	395.6	401.1
	REINF. STEEL EPOXY COATED	LBS.	93,102	93,745	93,973	95,067	90,761	91,354	91,429	91,953
	Δ REINF. STEEL STAINLESS STEEL	LBS.	3105	3105	3105	3105	3105	3105	3105	3105
CONCRETE BARRIER OR OPEN RAIL		LIN. FT.	282.0	282.2	282.9	284.5	282.0	282.2	282.9	284.5
WITH OPEN RAIL	* STRUCTURAL CONCRETE (BRIDGE)	C.Y.	398.1	399.0	402.2	409.2	392.0	392.8	395.3	400.8
	REINF. STEEL EPOXY COATED	LBS.	93,558	94,201	94,429	95,523	91,217	91,810	91,885	92,409
	Δ REINF. STEEL STAINLESS STEEL	LBS.	3168	3168	3168	3168	3168	3168	3168	3168

* INCLUDES 4 WINGS @ 0.68 C.Y. EACH; EXCLUDES RAIL CONCRETE.
Δ INCLUDES ABUTMENT PAVING NOTCH BAR WEIGHT.

BENT BAR DETAILS

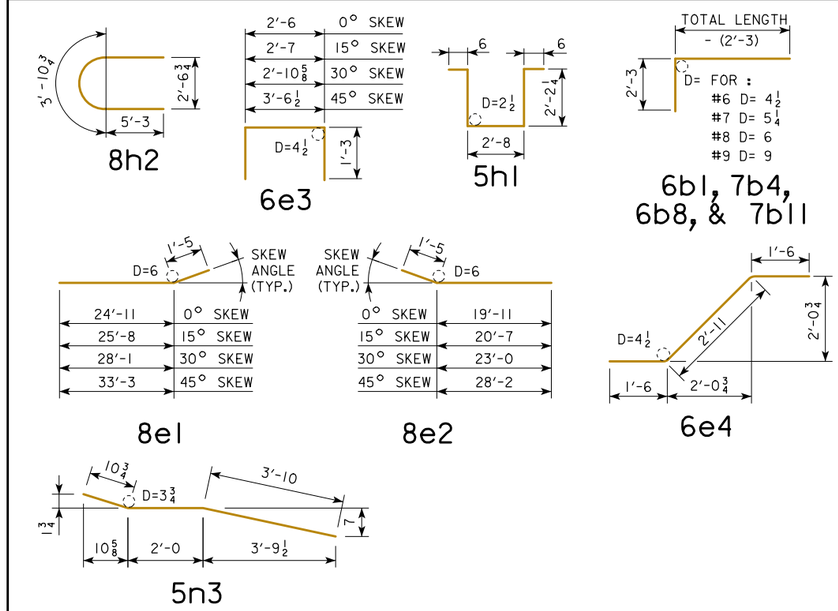

NOTE: ALL DIMENSIONS ARE OUT TO OUT. D = PIN DIAMETER.

STAINLESS STEEL REINFORCING FOR SUPERSTRUCTURE - BRIDGE

LOCATION \ ALL SKEWS	SHAPE	BAR	NO.	LENGTH	WEIGHT
ABUTMENT PAVING NOTCH BAR		8u1	40	2'-1	223

8u1 BARS SHALL BE PAID FOR UNDER THE BID ITEM "REINFORCING STEEL, STAINLESS STEEL". WEIGHT = LBS.

NOTES:
ALL BARRIER RAIL REINFORCING STEEL IS TO BE EITHER EPOXY COATED OR STAINLESS STEEL AS SHOWN OR NOTED. THE STAINLESS STEEL REINFORCING STEEL SHALL BE DEFORMED BAR GRADE 60 MEETING THE REQUIREMENTS OF MATERIALS I.M.452.

ALL OTHER REINFORCING STEEL IS TO BE EPOXY COATED.

THE TRANSVERSE REBARS ARE DETAILED WITH A SPLICE LAP. AT THE CONTRACTOR'S OPTION, THIS LAP MAY BE ELIMINATED BY FURNISHING FULL LENGTH BARS WITH NO REDUCTION IN PAY WEIGHT FOR SAME.

REVISED 09-14 - CHANGED REFERENCE TO THE BARRIER RAIL & OPEN RAIL TO THE J40-14 STANDARDS INSTEAD OF J40-06 STANDARDS.
REVISED 03-2016 - REVISION FOR ADDITION OF PAVING NOTCH BAR 8u1.
REVISED 04-2016 - REVISION TO INCLUDE PAVING NOTCH BAR 8u1 WEIGHT IN ESTIMATED QUANTITIES TABLE.

04-2016
LATEST REVISION DATE

APPROVED BY BRIDGE ENGINEER

IOWA DOT Highway Division

STANDARD DESIGN - 40' ROADWAY, 3 SPAN BRIDGES
CONTINUOUS CONCRETE SLAB BRIDGES
JULY, 2014

SUPERSTRUCTURE DETAILS
130'-0 BRIDGE

J40-15-14

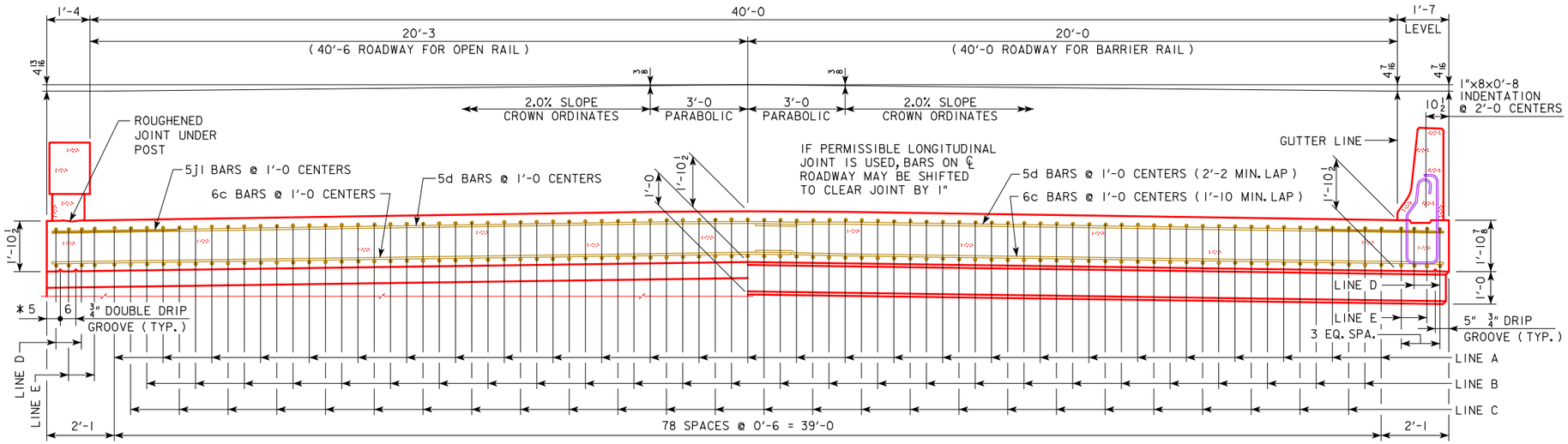

* NOTE: DOUBLE DRIP GROOVES FOR OPEN RAIL OPTION ONLY.

HALF SECTION NEAR ABUTMENT

SLAB CROSS-SECTIONAL AREA FOR OPEN RAIL = 80.94 SQ. FT.

HALF SECTION NEAR PIER

SLAB CROSS-SECTIONAL AREA FOR BARRIER RAIL = 80.99 SQ. FT.

NOTE: TOP LONGITUDINAL REINFORCING STEEL IS TO BE PARALLEL TO AND 2 1/2" CLEAR BELOW TOP OF SLAB. BOTTOM LONGITUDINAL REINFORCING STEEL IS TO BE PARALLEL TO AND 1 1/2" CLEAR ABOVE BOTTOM OF SLAB. REINFORCING STEEL IS TO BE SECURELY WIRED IN PLACE AND ADEQUATELY SUPPORTED ON BAR CHAIRS BEFORE CONCRETE IS POURED. I.M. 451.01 REQUIREMENTS SHALL APPLY FOR BAR CHAIRS.

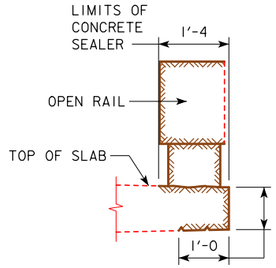

CONCRETE SEALER LIMITS FOR OPEN RAILS

CONCRETE SEALER SHALL BE APPLIED TO BOTH SIDES OF BRIDGE SLAB ON THE TOP, EDGE OF SLAB AND UNDER THE SLAB. THE CONCRETE SEALER SHALL ALSO BE APPLIED TO THE OPEN RAIL ON THE TOP, TRAFFIC FACE SIDE, BOTTOM OF RAIL, AND ON ALL SIDES OF THE OPEN RAIL POSTS.

THE CONCRETE SEALER LIMITS ARE SHOWN IN THE DETAIL AND SHALL APPLY TO THE FULL LENGTH OF BRIDGE. CONCRETE SEALER SHALL BE APPLIED IN ACCORDANCE WITH ARTICLE 2403.03, P, 3 OF THE STANDARD SPECIFICATIONS.

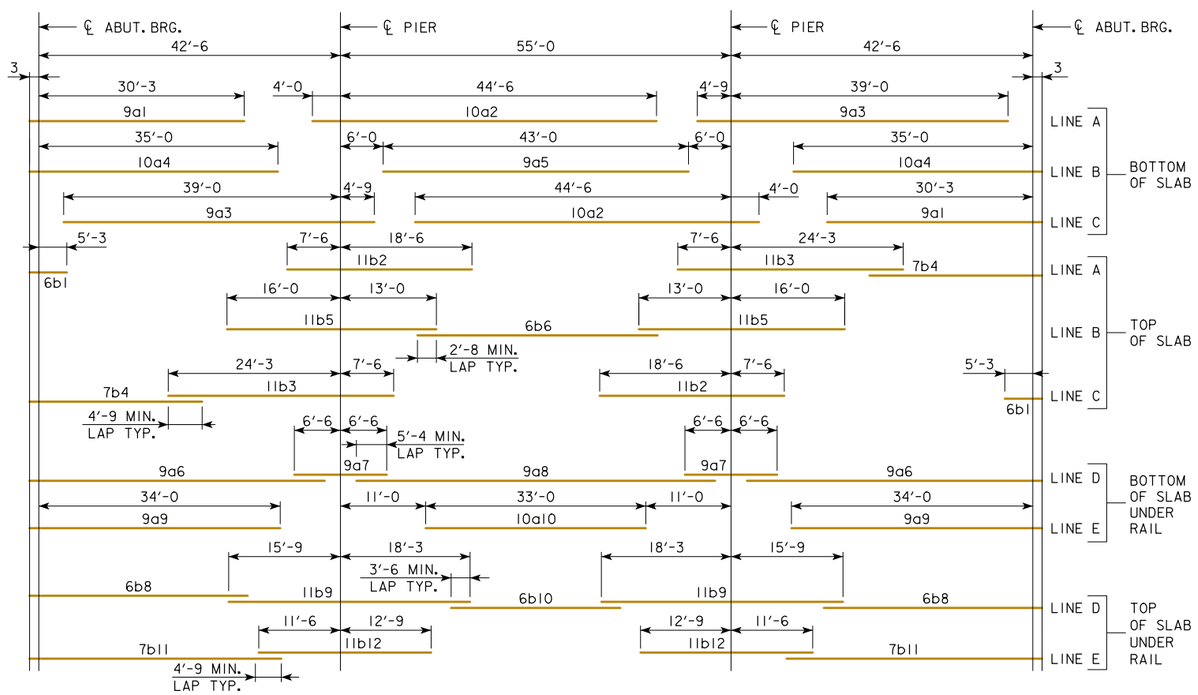

PLACEMENT FOR LONGITUDINAL REINFORCEMENT

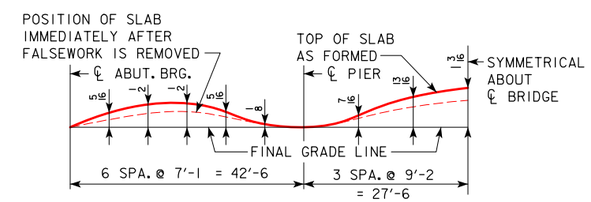

FORM CAMBER DIAGRAM

THIS DIAGRAM SHOWS THE FORM CAMBER REQUIRED TO COMPENSATE FOR THE ANTICIPATED ULTIMATE DEAD LOAD DEFLECTION. THE ABOVE DIMENSIONS DO NOT INCLUDE ANY ALLOWANCE FOR FORM DEFLECTION OR FALSEWORK SETTLEMENT.

LATEST REVISION DATE

APPROVED BY BRIDGE ENGINEER

IOWA DOT Highway Division

STANDARD DESIGN - 40' ROADWAY, 3 SPAN BRIDGES

CONTINUOUS CONCRETE SLAB BRIDGES

JULY, 2014

SUPERSTRUCTURE DETAILS
140'-0 BRIDGE

J40-16-14

BILL OF REINFORCING STEEL FOR SUPERSTRUCTURE - 140' BRIDGE

LOCATION \ SKEW	SHAPE	BAR	0° NO.	0° LENGTH	0° WEIGHT	15° NO.	15° LENGTH	15° WEIGHT	30° NO.	30° LENGTH	30° WEIGHT	45° NO.	45° LENGTH	45° WEIGHT
SLAB LONGITUDINAL BOTTOM		9a1	53	30'-6	5497	53	30'-6	5497	53	30'-6	5497	53	30'-6	5497
SLAB LONGITUDINAL BOTTOM		10a2	53	48'-6	11,061	53	48'-6	11,061	53	48'-6	11,061	53	48'-6	11,061
SLAB LONGITUDINAL BOTTOM		9a3	53	43'-9	7884	53	43'-9	7884	53	43'-9	7884	53	43'-9	7884
SLAB LONGITUDINAL BOTTOM		10a4	52	35'-3	7888	52	35'-3	7888	52	35'-3	7888	52	35'-3	7888
SLAB LONGITUDINAL BOTTOM		9a5	26	43'-0	3802	26	43'-0	3802	26	43'-0	3802	26	43'-0	3802
SLAB LONGITUDINAL BOTTOM, AT RAIL		9a6	8	41'-7	1132	8	41'-7	1132	8	41'-7	1132	8	41'-7	1132
SLAB LONGITUDINAL BOTTOM, AT RAIL		9a7	8	13'-0	354	8	13'-0	354	8	13'-0	354	8	13'-0	354
SLAB LONGITUDINAL BOTTOM, AT RAIL		9a8	4	52'-8	717	4	52'-8	717	4	52'-8	717	4	52'-8	717
SLAB LONGITUDINAL BOTTOM, AT RAIL		9a9	8	34'-3	932	8	34'-3	932	8	34'-3	932	8	34'-3	932
SLAB LONGITUDINAL BOTTOM, AT RAIL		10a10	4	33'-0	568	4	33'-0	568	4	33'-0	568	4	33'-0	568
SLAB LONGITUDINAL TOP		6b1	53	7'-9	617	53	7'-9	617	53	7'-9	617	53	7'-9	617
SLAB LONGITUDINAL TOP		11b2	53	26'-0	7322	53	26'-0	7322	53	26'-0	7322	53	31'-9	7322
SLAB LONGITUDINAL TOP		11b3	53	31'-9	8941	53	31'-9	8941	53	31'-9	8941	53	25'-6	8941
SLAB LONGITUDINAL TOP		7b4	53	25'-6	2763	53	25'-6	2763	53	25'-6	2763	53	29'-0	2763
SLAB LONGITUDINAL TOP		11b5	52	29'-0	8013	52	29'-0	8013	52	29'-0	8013	52	34'-4	8013
SLAB LONGITUDINAL TOP		6b6	26	34'-4	1341	26	34'-4	1341	26	34'-4	1341	26	26'-0	1341
SLAB LONGITUDINAL TOP, AT RAIL		6b8	8	32'-9	394	8	32'-9	394	8	32'-9	394	8	32'-9	394
SLAB LONGITUDINAL TOP, AT RAIL		11b9	8	34'-0	1446	8	34'-0	1446	8	34'-0	1446	8	34'-0	1446
SLAB LONGITUDINAL TOP, AT RAIL		6b10	4	25'-6	154	4	25'-6	154	4	25'-6	154	4	25'-6	154
SLAB LONGITUDINAL TOP, AT RAIL		7b11	8	38'-3	626	8	38'-3	626	8	38'-3	626	8	38'-3	626
SLAB LONGITUDINAL TOP, AT RAIL		11b12	8	24'-3	1031	8	24'-3	1031	8	24'-3	1031	8	24'-3	1031
SLAB TRANSVERSE BOTTOM		6c1	137	23'-5	4819	137	24'-3	4991	128	23'-5	4502	118	23'-5	4151
SLAB TRANSVERSE BOTTOM		6c2	137	21'-3	4373	137	22'-0	4528	129	21'-3	4118	121	21'-3	3863
SLAB TRANSVERSE ENDS, BOTTOM		6c3	-	-	-	-	-	-	12	VARIES	223	20	VARIES	411
SLAB TRANSVERSE ENDS, BOTTOM		6c4	-	-	-	-	-	-	11	VARIES	219	20	VARIES	386
SLAB TRANSVERSE ENDS, BOTTOM		6c5	-	-	-	-	-	-	11	VARIES	176	18	VARIES	302
SLAB TRANSVERSE ENDS, BOTTOM		6c6	-	-	-	-	-	-	11	VARIES	190	17	VARIES	311
SLAB TRANSVERSE TOP		5d1	137	23'-9	3394	137	24'-7	3513	128	23'-9	3171	118	23'-9	2924
SLAB TRANSVERSE TOP		5d2	137	21'-3	3037	137	22'-0	3144	129	21'-3	2860	121	21'-3	2682
SLAB TRANSVERSE ENDS, TOP		5d3	-	-	-	-	-	-	12	VARIES	155	20	VARIES	286
SLAB TRANSVERSE ENDS, TOP		5d4	-	-	-	-	-	-	11	VARIES	152	20	VARIES	268
SLAB TRANSVERSE ENDS, TOP		5d5	-	-	-	-	-	-	11	VARIES	122	18	VARIES	210
SLAB TRANSVERSE ENDS, TOP		5d6	-	-	-	-	-	-	11	VARIES	132	17	VARIES	216
SLAB, TRANSVERSE AT ABUTMENT		8e1	18	26'-4	1266	18	27'-1	1302	18	29'-6	1418	18	34'-8	1667
SLAB, TRANSVERSE AT ABUTMENT		8e2	18	21'-4	1026	18	22'-0	1058	18	24'-5	1174	18	29'-7	1422
SLAB, HAIRPINS, AT ABUTMENT		6e3	92	5'-0	691	92	5'-1	703	92	5'-5	749	92	6'-1	841
SLAB, DIAGONALS, AT ABUTMENT		6e4	92	5'-11	818	92	5'-11	818	92	5'-11	818	92	5'-11	818
PIER CAP HOOPS		5h1	60	8'-3	517	60	8'-3	517	60	8'-3	517	90	8'-3	775
PIER CAP ENDS		8h2	4	14'-5	154	4	14'-5	154	4	14'-5	154	4	14'-5	154
PIER CAP, BOTTOM LONGITUDINAL		8h3	8	25'-5	543	8	26'-7	568	8	29'-4	627	8	35'-0	748
PIER CAP, BOTTOM LONGITUDINAL		8h4	8	19'-11	426	8	20'-3	433	8	22'-2	474	8	26'-10	574
PIER CAP, TOP LONGITUDINAL		8h5	4	26'-2	280	4	27'-5	293	4	30'-4	324	4	36'-1	386
PIER CAP, TOP LONGITUDINAL		8h6	4	21'-5	229	4	21'-10	234	4	23'-11	256	4	28'-8	307
TOP OF SLAB, TRANSVERSE, AT RAIL		5j1	272	8'-6	2412	272	8'-6	2412	262	8'-6	2323	256	8'-6	2270
WING, VERTICAL		5m1	40	4'-5	185	40	4'-5	185	40	4'-5	185	40	4'-5	185
WING, HORIZONTAL BACK FACE		5n1	24	6'-8	167	24	6'-8	167	24	6'-8	167	24	6'-8	167
WING, HORIZONTAL TRAFFIC FACE		5n3	24	6'-9	169	24	6'-9	169	24	6'-9	169	24	6'-9	169
SUB EPOXY COATED TOTAL - LBS.					96,989			97,672			97,858			98,976
BARRIER RAIL - SEE LIST ON RAIL SHEET J40-46-14					5483			5483			5483			5483
OPEN RAIL - SEE LIST ON RAIL SHEET J40-49-14					5953			5953			5953			5953
EPOXY COATED RAIL TOTAL - LBS. WITH MONOLITHIC PIER CAP		WITH BARRIER RAIL			102,472			103,155			103,341			104,459
		WITH OPEN RAIL			102,942			103,625			103,811			104,929
EPOXY COATED RAIL TOTAL - LBS. WITH NON-MONOLITHIC PIER CAP		WITH BARRIER RAIL			100,323			100,956			100,989			101,515
SAME AS ABOVE EXCEPT ALL "h" BARS DELETED		WITH OPEN RAIL			100,793			101,426			101,459			101,985
STAINLESS STEEL RAIL TOTAL - LBS.		WITH BARRIER RAIL			3119			3119			3119			3119
		WITH OPEN RAIL			3104			3104			3104			3104

ESTIMATED QUANTITIES FOR SUPERSTRUCTURE - 140' BRIDGE

ITEM		SKEW	WITH MONOLITHIC PIER CAP 0°	15°	30°	45°	WITH NON-MONOLITHIC PIER CAP 0°	15°	30°	45°
WITH BARRIER RAIL	* STRUCTURAL CONCRETE (BRIDGE)	C.Y.	449.5	450.4	453.5	460.4	443.4	444.2	446.6	452.0
	REINF. STEEL EPOXY COATED	LBS.	102,472	103,155	103,341	104,459	100,323	100,956	100,989	101,515
	Δ REINF. STEEL STAINLESS STEEL	LBS.	3342	3342	3342	3342	3342	3342	3342	3342
CONCRETE BARRIER OR OPEN RAIL		LIN. FT.	302.0	302.2	302.9	304.5	302.0	302.2	302.9	304.5
WITH OPEN RAIL	* STRUCTURAL CONCRETE (BRIDGE)	C.Y.	449.2	450.1	453.3	460.1	443.2	443.9	446.4	451.7
	REINF. STEEL EPOXY COATED	LBS.	102,942	103,625	103,811	104,929	100,793	101,426	101,459	101,985
	Δ REINF. STEEL STAINLESS STEEL	LBS.	3327	3327	3327	3327	3327	3327	3327	3327

* INCLUDES 4 WINGS @ 0.68 C.Y. EACH; EXCLUDES RAIL CONCRETE.
Δ INCLUDES ABUTMENT PAVING NOTCH BAR WEIGHT.

BENT BAR DETAILS

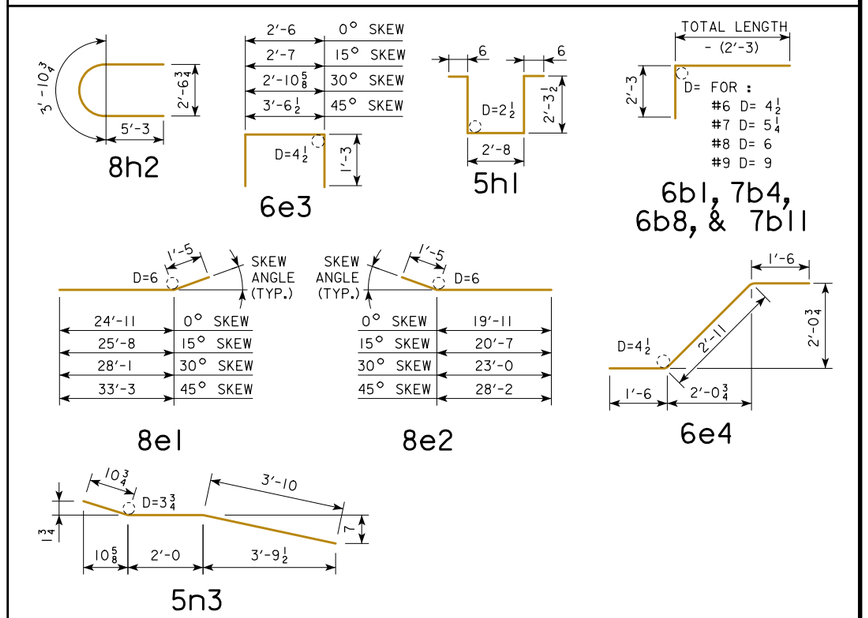

NOTE: ALL DIMENSIONS ARE OUT TO OUT. D = PIN DIAMETER.

STAINLESS STEEL REINFORCING FOR SUPERSTRUCTURE - BRIDGE

LOCATION \ ALL SKEWS	SHAPE	BAR	NO.	LENGTH	WEIGHT
ABUTMENT PAVING NOTCH BAR		8u1	40	2'-1	223

8u1 BARS SHALL BE PAID FOR UNDER THE BID ITEM "REINFORCING STEEL, STAINLESS STEEL". WEIGHT = LBS.

NOTES:
ALL BARRIER RAIL REINFORCING STEEL IS TO BE EITHER EPOXY COATED OR STAINLESS STEEL AS SHOWN OR NOTED. THE STAINLESS STEEL REINFORCING STEEL SHALL BE DEFORMED BAR GRADE 60 MEETING THE REQUIREMENTS OF MATERIALS I.M.452.

ALL OTHER REINFORCING STEEL IS TO BE EPOXY COATED.

THE TRANSVERSE REBARS ARE DETAILED WITH A SPLICE LAP. AT THE CONTRACTOR'S OPTION, THIS LAP MAY BE ELIMINATED BY FURNISHING FULL LENGTH BARS WITH NO REDUCTION IN PAY WEIGHT FOR SAME.

REVISED 09-14 - CHANGED REFERENCE TO THE BARRIER RAIL & OPEN RAIL TO THE J40-14 STANDARDS INSTEAD OF J40-06 STANDARDS.
REVISED 03-2016 - REVISION FOR ADDITION OF PAVING NOTCH BAR 8u1.
REVISED 04-2016 - REVISION TO INCLUDE PAVING NOTCH BAR 8u1 WEIGHT IN ESTIMATED QUANTITIES TABLE.

04-2016
LATEST REVISION DATE

APPROVED BY BRIDGE ENGINEER

IOWA DOT Highway Division

STANDARD DESIGN - 40' ROADWAY, 3 SPAN BRIDGES

CONTINUOUS CONCRETE SLAB BRIDGES

JULY, 2014

SUPERSTRUCTURE DETAILS
140'-0 BRIDGE

J40-17-14

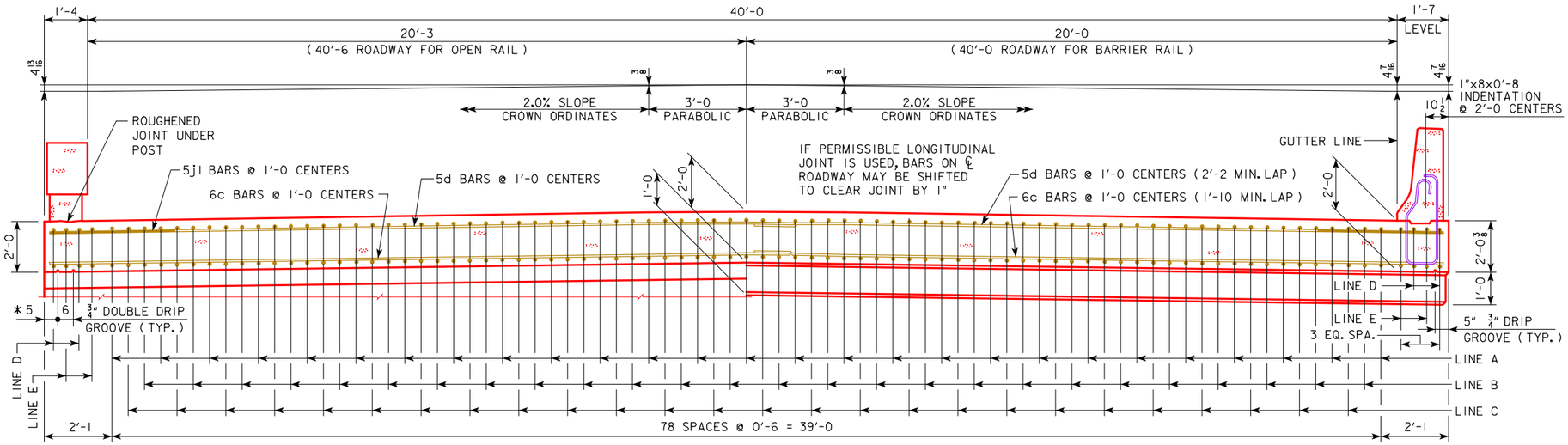

* NOTE: DOUBLE DRIP GROOVES FOR OPEN RAIL OPTION ONLY.

HALF SECTION NEAR ABUTMENT

SLAB CROSS-SECTIONAL AREA FOR OPEN RAIL = 86.33 SQ. FT.

NOTE: TOP LONGITUDINAL REINFORCING STEEL IS TO BE PARALLEL TO AND 2½" CLEAR BELOW TOP OF SLAB. BOTTOM LONGITUDINAL REINFORCING STEEL IS TO BE PARALLEL TO AND 1½" CLEAR ABOVE BOTTOM OF SLAB. REINFORCING STEEL IS TO BE SECURELY WIRED IN PLACE AND ADEQUATELY SUPPORTED ON BAR CHAIRS BEFORE CONCRETE IS POURED. I.M. 451.01 REQUIREMENTS SHALL APPLY FOR BAR CHAIRS.

HALF SECTION NEAR PIER

SLAB CROSS-SECTIONAL AREA FOR BARRIER RAIL = 86.38 SQ. FT.

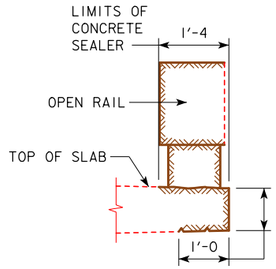

CONCRETE SEALER LIMITS FOR OPEN RAILS

CONCRETE SEALER SHALL BE APPLIED TO BOTH SIDES OF BRIDGE SLAB ON THE TOP, EDGE OF SLAB AND UNDER THE SLAB. THE CONCRETE SEALER SHALL ALSO BE APPLIED TO THE OPEN RAIL ON THE TOP, TRAFFIC FACE SIDE, BOTTOM OF RAIL, AND ON ALL SIDES OF THE OPEN RAIL POSTS.

THE CONCRETE SEALER LIMITS ARE SHOWN IN THE DETAIL AND SHALL APPLY TO THE FULL LENGTH OF BRIDGE. CONCRETE SEALER SHALL BE APPLIED IN ACCORDANCE WITH ARTICLE 2403.03, P, 3 OF THE STANDARD SPECIFICATIONS.

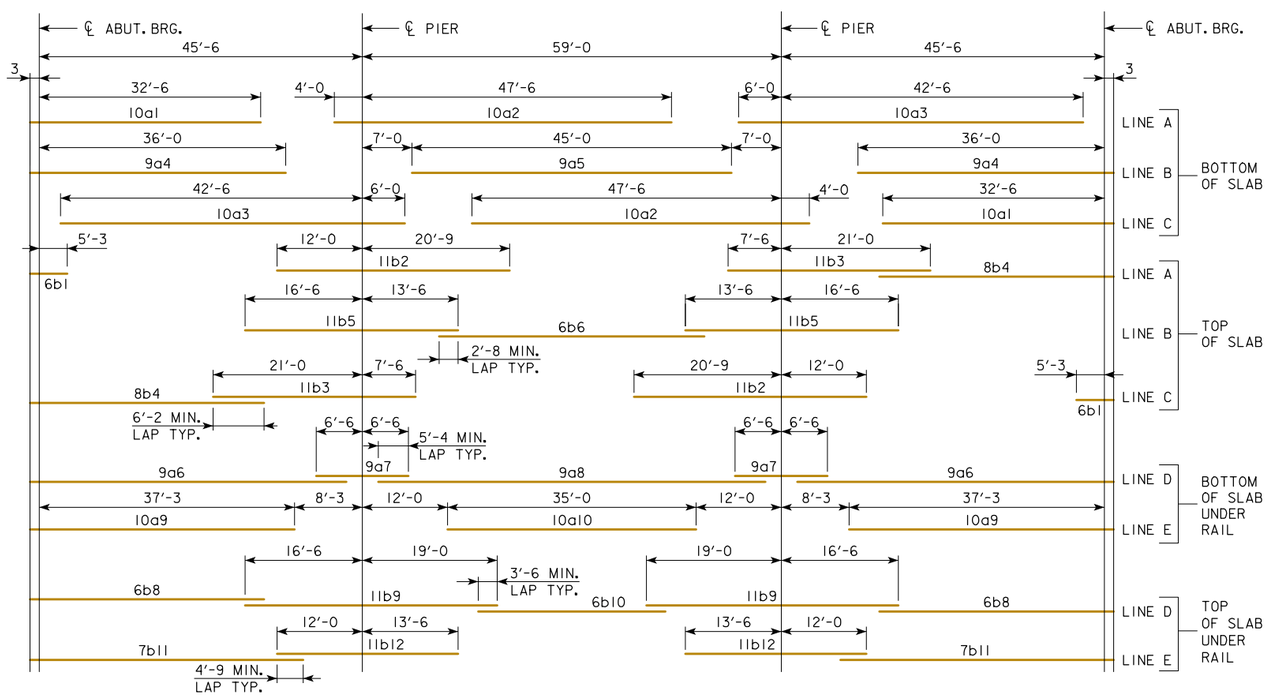

PLACEMENT FOR LONGITUDINAL REINFORCEMENT

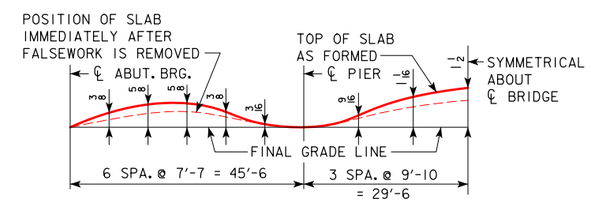

FORM CAMBER DIAGRAM

THIS DIAGRAM SHOWS THE FORM CAMBER REQUIRED TO COMPENSATE FOR THE ANTICIPATED ULTIMATE DEAD LOAD DEFLECTION. THE ABOVE DIMENSIONS DO NOT INCLUDE ANY ALLOWANCE FOR FORM DEFLECTION OR FALSEWORK SETTLEMENT.

LATEST REVISION DATE

APPROVED BY BRIDGE ENGINEER

IOWA DOT Highway Division

STANDARD DESIGN - 40' ROADWAY, 3 SPAN BRIDGES

CONTINUOUS CONCRETE SLAB BRIDGES

JULY, 2014

SUPERSTRUCTURE DETAILS
150'-0 BRIDGE

J40-18-14

BILL OF REINFORCING STEEL FOR SUPERSTRUCTURE - 150' BRIDGE

LOCATION \ SKEW	SHAPE	BAR	0° NO.	0° LENGTH	0° WEIGHT	15° NO.	15° LENGTH	15° WEIGHT	30° NO.	30° LENGTH	30° WEIGHT	45° NO.	45° LENGTH	45° WEIGHT
SLAB LONGITUDINAL BOTTOM		10a1	53	32'-9	7469	53	32'-9	7469	53	32'-9	7469	53	32'-9	7469
SLAB LONGITUDINAL BOTTOM		10a2	53	51'-6	11,746	53	51'-6	11,746	53	51'-6	11,746	53	51'-6	11,746
SLAB LONGITUDINAL BOTTOM		10a3	53	48'-6	11,061	53	48'-6	11,061	53	48'-6	11,061	53	48'-6	11,061
SLAB LONGITUDINAL BOTTOM		9a4	52	36'-3	6409	52	36'-3	6409	52	36'-3	6409	52	36'-3	6409
SLAB LONGITUDINAL BOTTOM		9a5	26	45'-0	3978	26	45'-0	3978	26	45'-0	3978	26	45'-0	3978
SLAB LONGITUDINAL BOTTOM, AT RAIL		9a6	8	44'-7	1213	8	44'-7	1213	8	44'-7	1213	8	44'-7	1213
SLAB LONGITUDINAL BOTTOM, AT RAIL		9a7	8	13'-0	354	8	13'-0	354	8	13'-0	354	8	13'-0	354
SLAB LONGITUDINAL BOTTOM, AT RAIL		9a8	4	56'-8	771	4	56'-8	771	4	56'-8	771	4	56'-8	771
SLAB LONGITUDINAL BOTTOM, AT RAIL		10a9	8	37'-6	1291	8	37'-6	1291	8	37'-6	1291	8	37'-6	1291
SLAB LONGITUDINAL BOTTOM, AT RAIL		10a10	4	35'-0	603	4	35'-0	603	4	35'-0	603	4	35'-0	603
SLAB LONGITUDINAL TOP		6b1	53	7'-9	617	53	7'-9	617	53	7'-9	617	53	7'-9	617
SLAB LONGITUDINAL TOP		11b2	53	32'-9	9223	53	32'-9	9223	53	32'-9	9223	53	32'-9	9223
SLAB LONGITUDINAL TOP		11b3	53	28'-6	8026	53	28'-6	8026	53	28'-6	8026	53	28'-6	8026
SLAB LONGITUDINAL TOP		8b4	53	33'-2	4694	53	33'-2	4694	53	33'-2	4694	53	33'-2	4694
SLAB LONGITUDINAL TOP		11b5	52	30'-0	8289	52	30'-0	8289	52	30'-0	8289	52	30'-0	8289
SLAB LONGITUDINAL TOP		6b6	26	37'-4	1458	26	37'-4	1458	26	37'-4	1458	26	37'-4	1458
SLAB LONGITUDINAL TOP, AT RAIL		6b8	8	35'-0	421	8	35'-0	421	8	35'-0	421	8	35'-0	421
SLAB LONGITUDINAL TOP, AT RAIL		11b9	8	35'-6	1509	8	35'-6	1509	8	35'-6	1509	8	35'-6	1509
SLAB LONGITUDINAL TOP, AT RAIL		6b10	4	28'-0	169	4	28'-0	169	4	28'-0	169	4	28'-0	169
SLAB LONGITUDINAL TOP, AT RAIL		7b11	8	40'-9	667	8	40'-9	667	8	40'-9	667	8	40'-9	667
SLAB LONGITUDINAL TOP, AT RAIL		11b12	8	25'-6	1084	8	25'-6	1084	8	25'-6	1084	8	25'-6	1084
SLAB TRANSVERSE BOTTOM		6c1	147	23'-5	5171	147	24'-3	5355	138	23'-5	4854	128	23'-5	4502
SLAB TRANSVERSE BOTTOM		6c2	147	21'-3	4692	147	22'-0	4858	139	21'-3	4437	131	21'-3	4182
SLAB TRANSVERSE ENDS, BOTTOM		6c3	-	-	-	-	-	-	12	VARIES	223	20	VARIES	411
SLAB TRANSVERSE ENDS, BOTTOM		6c4	-	-	-	-	-	-	11	VARIES	219	20	VARIES	386
SLAB TRANSVERSE ENDS, BOTTOM		6c5	-	-	-	-	-	-	11	VARIES	176	18	VARIES	302
SLAB TRANSVERSE ENDS, BOTTOM		6c6	-	-	-	-	-	-	11	VARIES	190	17	VARIES	311
SLAB TRANSVERSE TOP		5d1	147	23'-9	3642	147	24'-7	3770	139	23'-9	3444	128	23'-9	3171
SLAB TRANSVERSE TOP		5d2	147	21'-3	3259	147	22'-0	3374	139	21'-3	3081	131	21'-3	2904
SLAB TRANSVERSE ENDS, TOP		5d3	-	-	-	-	-	-	12	VARIES	155	20	VARIES	286
SLAB TRANSVERSE ENDS, TOP		5d4	-	-	-	-	-	-	11	VARIES	152	20	VARIES	268
SLAB TRANSVERSE ENDS, TOP		5d5	-	-	-	-	-	-	11	VARIES	122	18	VARIES	210
SLAB TRANSVERSE ENDS, TOP		5d6	-	-	-	-	-	-	11	VARIES	132	17	VARIES	216
SLAB, TRANSVERSE AT ABUTMENT		8e1	18	26'-4	1266	18	27'-1	1302	18	29'-6	1418	18	34'-8	1667
SLAB, TRANSVERSE AT ABUTMENT		8e2	18	21'-4	1026	18	22'-0	1058	18	24'-5	1174	18	29'-7	1422
SLAB, HAIRPINS, AT ABUTMENT		6e3	92	5'-0	691	92	5'-1	703	92	5'-5	749	92	6'-1	841
SLAB, DIAGONALS, AT ABUTMENT		6e4	92	5'-11	818	92	5'-11	818	92	5'-11	818	92	5'-11	818
PIER CAP HOOPS		5h1	60	8'-6	532	60	8'-6	532	60	8'-6	532	90	8'-6	798
PIER CAP ENDS		8h2	4	14'-5	154	4	14'-5	154	4	14'-5	154	4	14'-5	154
PIER CAP, BOTTOM LONGITUDINAL		8h3	8	25'-5	543	8	26'-7	568	8	29'-4	627	8	35'-0	748
PIER CAP, BOTTOM LONGITUDINAL		8h4	8	19'-11	426	8	20'-3	433	8	22'-2	474	8	26'-10	574
PIER CAP, TOP LONGITUDINAL		8h5	4	26'-2	280	4	27'-5	293	4	30'-4	324	4	36'-1	386
PIER CAP, TOP LONGITUDINAL		8h6	4	21'-5	229	4	21'-10	234	4	23'-11	256	4	28'-8	307
TOP OF SLAB, TRANSVERSE, AT RAIL		5j1	292	8'-6	2589	292	8'-6	2589	282	8'-6	2501	276	8'-6	2447
WING, VERTICAL		5m1	40	4'-5	185	40	4'-5	185	40	4'-5	185	40	4'-5	185
WING, HORIZONTAL BACK FACE		5n1	24	6'-8	167	24	6'-8	167	24	6'-8	167	24	6'-8	167
WING, HORIZONTAL TRAFFIC FACE		5n3	24	6'-9	169	24	6'-9	169	24	6'-9	169	24	6'-9	169
SUB EPOXY COATED TOTAL - LBS.					106,891			107,614			107,785			108,884
BARRIER RAIL - SEE LIST ON RAIL SHEET J40-46-14					5795			5795			5795			5795
OPEN RAIL - SEE LIST ON RAIL SHEET J40-49-14					6338			6338			6338			6338
EPOXY COATED RAIL TOTAL - LBS. WITH MONOLITHIC PIER CAP		WITH BARRIER RAIL			112,686			113,409			113,580			114,679
		WITH OPEN RAIL			113,229			113,952			114,123			115,222
EPOXY COATED RAIL TOTAL - LBS. WITH NON-MONOLITHIC PIER CAP		WITH BARRIER RAIL			110,522			111,195			111,213			111,712
SAME AS ABOVE EXCEPT ALL "h" BARS DELETED		WITH OPEN RAIL			111,065			111,738			111,756			112,255
STAINLESS STEEL RAIL TOTAL - LBS.		WITH BARRIER RAIL			3366			3366			3366			3366
		WITH OPEN RAIL			3267			3267			3267			3267

ESTIMATED QUANTITIES FOR SUPERSTRUCTURE - 150' BRIDGE

ITEM		SKEW	WITH MONOLITHIC PIER CAP 0°	15°	30°	45°	WITH NON-MONOLITHIC PIER CAP 0°	15°	30°	45°
WITH BARRIER RAIL	* STRUCTURAL CONCRETE (BRIDGE)	C.Y.	508.8	509.8	512.8	519.5	502.8	503.5	505.9	511.1
	REINF. STEEL EPOXY COATED	LBS.	112,686	113,409	113,580	114,679	110,522	111,195	111,213	111,712
	Δ REINF. STEEL STAINLESS STEEL	LBS.	3589	3589	3589	3589	3589	3589	3589	3589
CONCRETE BARRIER OR OPEN RAIL		LIN. FT.	322.0	322.2	322.9	324.5	322.0	322.2	322.9	324.5
WITH OPEN RAIL	* STRUCTURAL CONCRETE (BRIDGE)	C.Y.	508.6	509.5	512.5	519.2	502.5	503.2	505.6	510.8
	REINF. STEEL EPOXY COATED	LBS.	113,229	113,952	114,123	115,222	111,065	111,738	111,756	112,255
	Δ REINF. STEEL STAINLESS STEEL	LBS.	3490	3490	3490	3490	3490	3490	3490	3490

* INCLUDES 4 WINGS @ 0.68 C.Y. EACH; EXCLUDES RAIL CONCRETE.
Δ INCLUDES ABUTMENT PAVING NOTCH BAR WEIGHT.

BENT BAR DETAILS

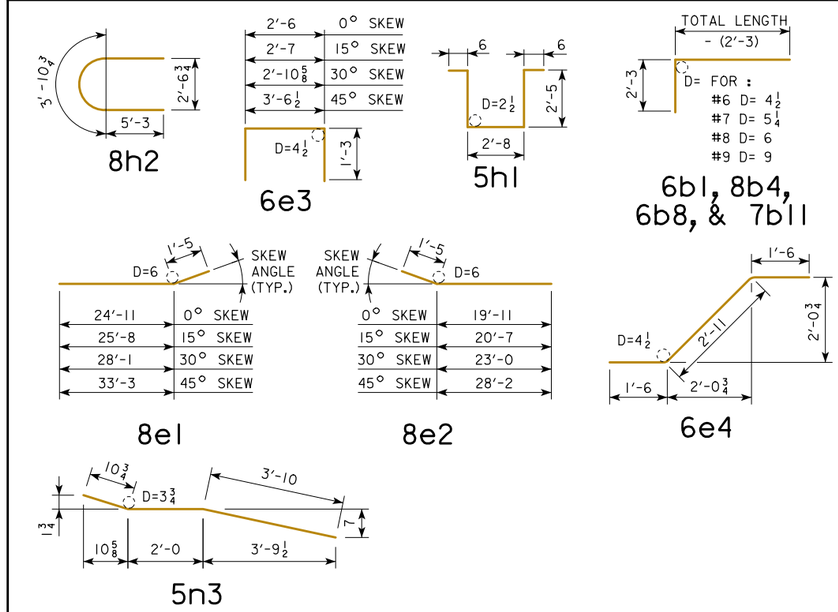

NOTE: ALL DIMENSIONS ARE OUT TO OUT. D = PIN DIAMETER.

STAINLESS STEEL REINFORCING FOR SUPERSTRUCTURE - BRIDGE

LOCATION \ ALL SKEWS	SHAPE	BAR	NO.	LENGTH	WEIGHT
ABUTMENT PAVING NOTCH BAR		8u1	40	2'-1	223

8u1 BARS SHALL BE PAID FOR UNDER THE BID ITEM "REINFORCING STEEL, STAINLESS STEEL". WEIGHT = LBS.

NOTES:
ALL BARRIER RAIL REINFORCING STEEL IS TO BE EITHER EPOXY COATED OR STAINLESS STEEL AS SHOWN OR NOTED. THE STAINLESS STEEL REINFORCING STEEL SHALL BE DEFORMED BAR GRADE 60 MEETING THE REQUIREMENTS OF MATERIALS I.M.452.

ALL OTHER REINFORCING STEEL IS TO BE EPOXY COATED.

THE TRANSVERSE REBARS ARE DETAILED WITH A SPLICE LAP. AT THE CONTRACTOR'S OPTION, THIS LAP MAY BE ELIMINATED BY FURNISHING FULL LENGTH BARS WITH NO REDUCTION IN PAY WEIGHT FOR SAME.

REVISED 09-14 - CHANGED REFERENCE TO THE BARRIER RAIL & OPEN RAIL TO THE J40-14 STANDARDS INSTEAD OF J40-06 STANDARDS.
REVISED 03-2016 - REVISION FOR ADDITION OF PAVING NOTCH BAR 8u1.
REVISED 04-2016 - REVISION TO INCLUDE PAVING NOTCH BAR 8u1 WEIGHT IN ESTIMATED QUANTITIES TABLE.

04-2016
LATEST REVISION DATE

APPROVED BY BRIDGE ENGINEER

IOWA DOT Highway Division

STANDARD DESIGN - 40' ROADWAY, 3 SPAN BRIDGES

CONTINUOUS CONCRETE SLAB BRIDGES

JULY, 2014

SUPERSTRUCTURE DETAILS 150'-0 BRIDGE

J40-19-14

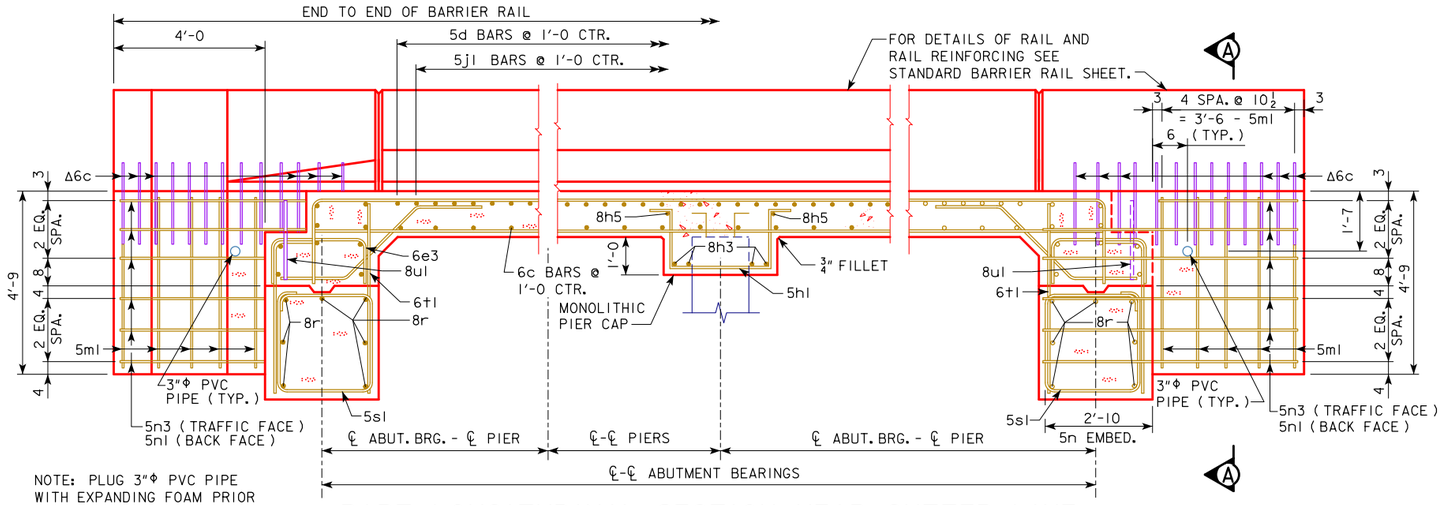

NOTE: PLUG 3"Φ PVC PIPE WITH EXPANDING FOAM PRIOR TO BACKFILLING BEHIND ABUTMENTS.

PART LONGITUDINAL SECTION NEAR GUTTER LINE

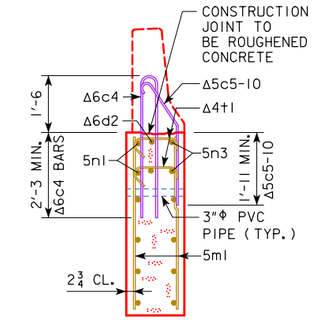

SECTION A-A

Δ NOTE: SEE END SECTION DETAILS IN THESE PLANS FOR DETAILS OF BARRIER RAIL END SECTION. REINFORCING BARS 6c3, 6c4, 5c5-10, 6d2 & 4t1 ARE INCLUDED IN THE SUPERSTRUCTURE QUANTITIES.

NOTE: 5ml & 5nl BARS ARE INCLUDED IN SUPERSTRUCTURE BAR LIST. 5c, 6c, 6d & 4t1 BARS ARE INCLUDED IN BARRIER RAIL BAR LIST.

SUPERSTRUCTURE NOTES:

THIS BRIDGE IS DESIGNED FOR HL-93 LOADING PLUS AN ALLOWANCE OF 20 POUNDS PER SQUARE FOOT OF ROADWAY FOR FUTURE WEARING SURFACE.

THE SLAB AS SHOWN INCLUDES A ½ INCH INTEGRAL WEARING SURFACE.

THE MINIMUM CLEAR DISTANCE FROM FACE OF CONCRETE TO NEAR REINFORCING BAR SHALL BE 2 INCHES UNLESS OTHERWISE NOTED OR SHOWN. ALL REINFORCING STEEL IS TO BE SECURELY WIRED IN PLACE. SEE "BAR CHAIR NOTE".

ALL REINFORCING SHALL BE GRADE 60.

THE CONCRETE SLAB IS TO BE PLACED WITH A MINIMUM OF CONSTRUCTION JOINTS. PROCEDURES FOR PLACING SLAB CONCRETE SHALL BE SUBMITTED FOR APPROVAL TOGETHER WITH A STATEMENT OF THE PROPOSED METHOD AND EVIDENCE THAT THE CONTRACTOR POSSESSES THE NECESSARY EQUIPMENT AND FACILITIES TO ACCOMPLISH THE REQUIRED RESULT. SLAB FALSEWORK SHALL BE REMOVED PRIOR TO CONSTRUCTION OF THE BARRIER RAILS.

NOTE THAT WHEN PORTLAND CEMENT APPROACH PAVEMENT IS PLACED, COMPRESSIBLE JOINT MATERIAL MUST BE USED BETWEEN PAVEMENT AND END OF BRIDGE.

IF NECESSARY TO PREVENT DAMAGE TO THE END OF THE BRIDGE DECK OR BACKWALL FROM CONSTRUCTION EQUIPMENT, AN APPROPRIATE METHOD OF PROTECTION APPROVED BY THE ENGINEER SHALL BE PROVIDED BY THE BRIDGE CONTRACTOR AT NO EXTRA COST TO THE STATE.

COST OF FURNISHING AND PLACING 3"Φ PVC PIPE IN EACH WING IS INCLUDED IN THE PRICE BID FOR STRUCTURAL CONCRETE.

BAR CHAIR NOTE:

TOP MAT OF REINFORCING STEEL IS TO BE SUPPORTED BY INDIVIDUAL BAR CHAIRS SPACED AT NOT MORE THAN 3'-0 CENTERS LONGITUDINALLY AND TRANSVERSELY. THE BOTTOM MAT OF REINFORCING STEEL IS TO BE SUPPORTED BY INDIVIDUAL BAR CHAIRS SPACED AT NOT MORE THAN 3'-0 CENTERS LONGITUDINALLY AND TRANSVERSELY, OR BY CONTINUOUS ROWS OF BAR HIGH CHAIRS OR SLAB BOLSTERS SPACED 4'-0 APART. I.M. 451.01 REQUIREMENTS SHALL APPLY FOR BAR CHAIRS, BAR HIGH CHAIRS, AND SLAB BOLSTERS.

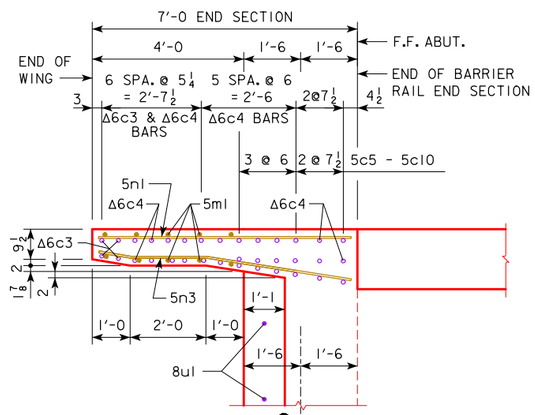

PART PLAN 0° SKEW

(RAILING NOT SHOWN)

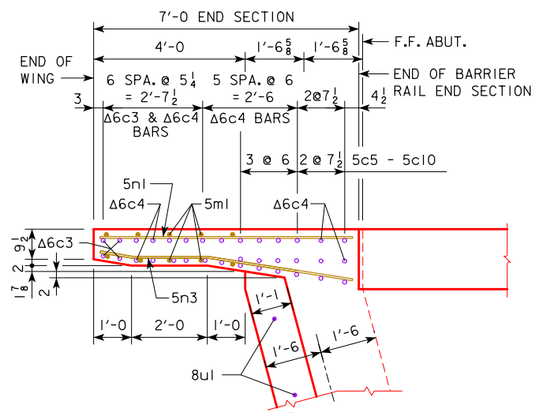

PART PLAN 15° SKEW

(RAILING NOT SHOWN)

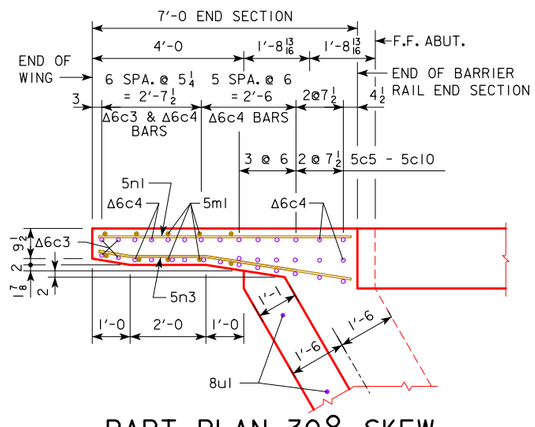

PART PLAN 30° SKEW

(RAILING NOT SHOWN)

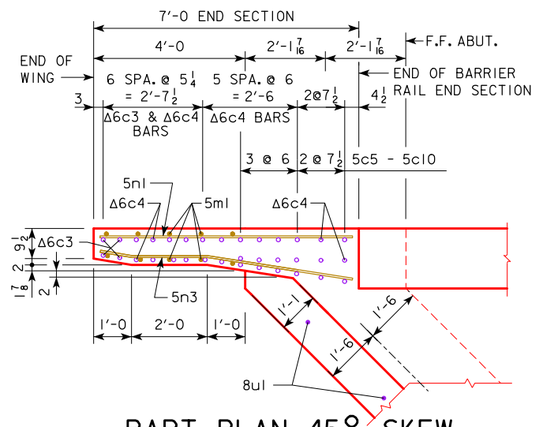

PART PLAN 45° SKEW

(RAILING NOT SHOWN)

NOTE: REINFORCING LAYOUT IN PART PLANS 0°, 15°, 30° & 45° SKEWS ARE FOR BARRIER RAIL ONLY. SEE SHEET J40-48-14 FOR OPEN RAIL.

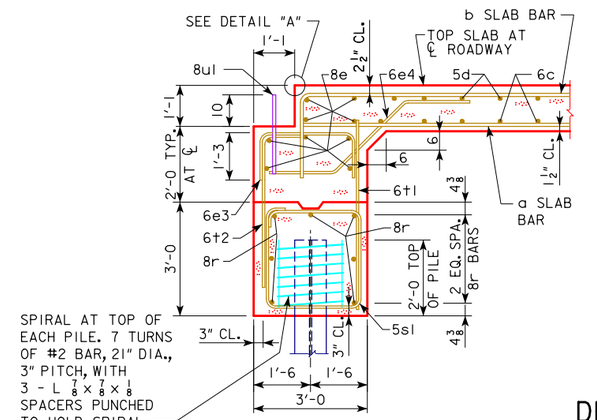

SECTION NORMAL TO ABUTMENT AT ℄

(BRIDGE LENGTHS 70'-110')

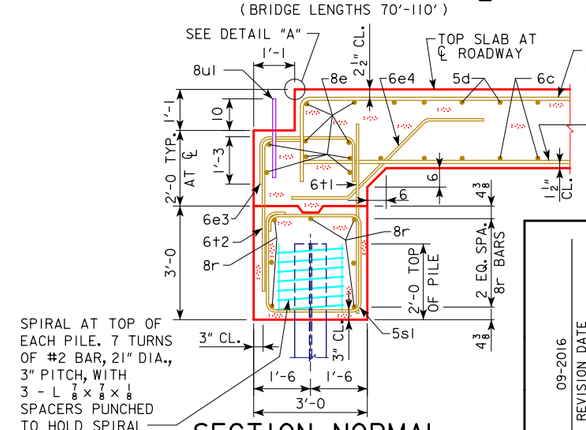

SECTION NORMAL TO ABUTMENT AT ℄

(BRIDGE LENGTHS 120'-150')

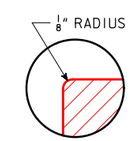

DETAIL "A"

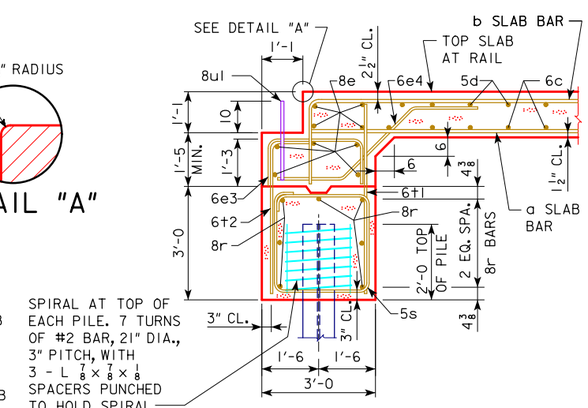

SECTION NORMAL TO ABUTMENT AT GUTTERLINE

09-2016 LATEST REVISION DATE	APPROVED BY BRIDGE ENGINEER	IOWA DOT Highway Division
		STANDARD DESIGN - 40' ROADWAY, 3 SPAN BRIDGES CONTINUOUS CONCRETE SLAB BRIDGES JULY, 2014
		SUPERSTRUCTURE DETAILS ALL BRIDGES — J40-20-14

REVISED 03-2016 - REVISION FOR ADDITION OF PAVING NOTCH BAR 8ul.
REVISED 09-2016 - CORRECTED REFERENCE TO OPEN RAIL SHEET J40-48-14 (IT WAS J40-48-06 IN ERROR).

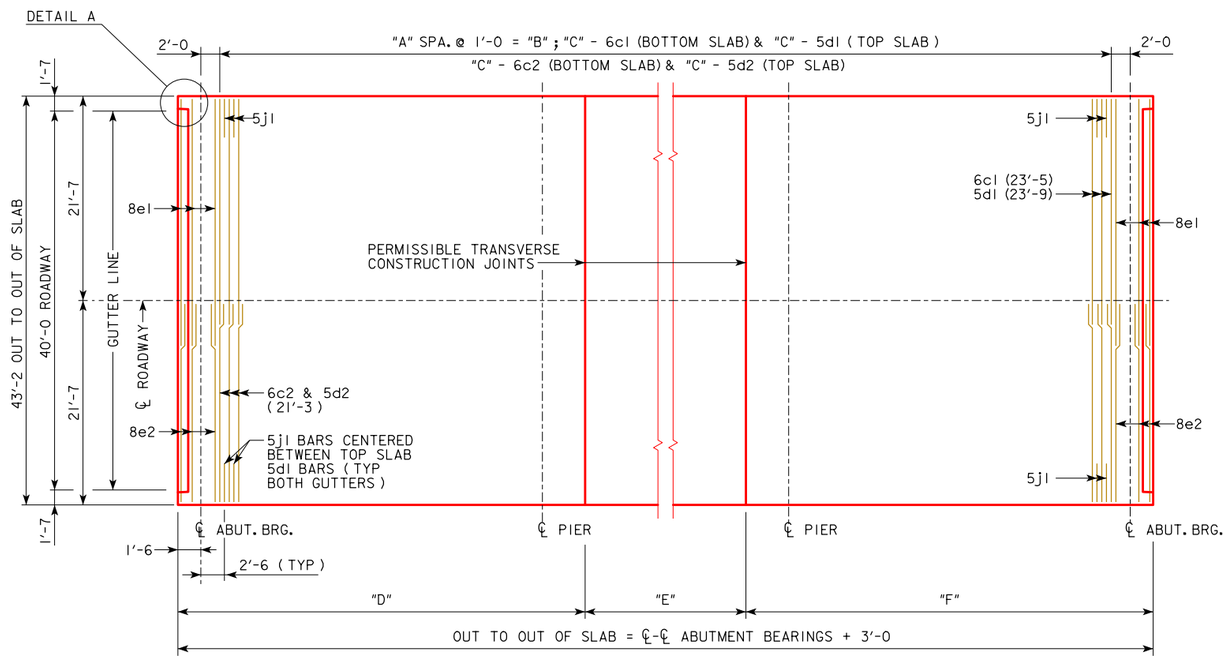

0° SKEW
TRANSVERSE REINFORCING STEEL LAYOUT

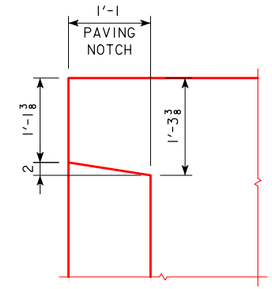

DETAIL A

0° TRANSV. REINF. DIMENSION TABLE

BRIDGE	"A"	"B"	"C"	"D"	"E"	"F"
70' BRIDGE	66	66'-0	67	28'-0	17'-0	28'-0
80' BRIDGE	76	76'-0	77	32'-0	19'-0	32'-0
90' BRIDGE	86	86'-0	87	36'-0	21'-0	36'-0
100' BRIDGE	96	96'-0	97	40'-0	23'-0	40'-0
110' BRIDGE	106	106'-0	107	44'-0	25'-0	44'-0
120' BRIDGE	116	116'-0	117	48'-0	27'-0	48'-0
130' BRIDGE	126	126'-0	127	52'-0	29'-0	52'-0
140' BRIDGE	136	136'-0	137	56'-0	31'-0	56'-0
150' BRIDGE	146	146'-0	147	60'-0	33'-0	60'-0

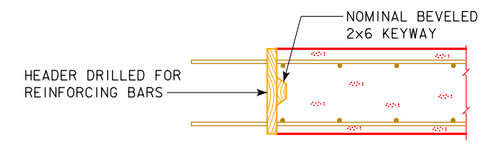

TRANSVERSE CONSTR. JOINT

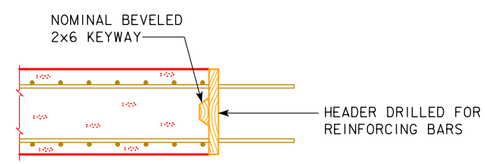

LONGITUDINAL CONSTR. JOINT

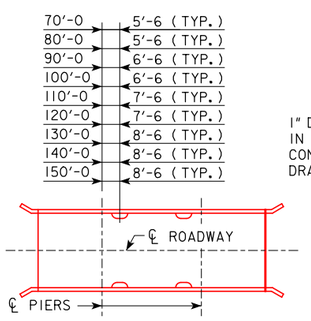

FLOOR DRAIN LOCATION

NOTE: 4" x 8" OUTSIDE DIMENSION ROLLED TUBE WITH 1/4" WALL THICKNESS MAY BE SUBSTITUTED FOR THE WELDED DRAIN SHOWN.

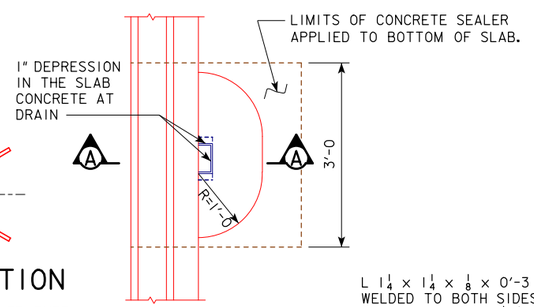

PART PLAN

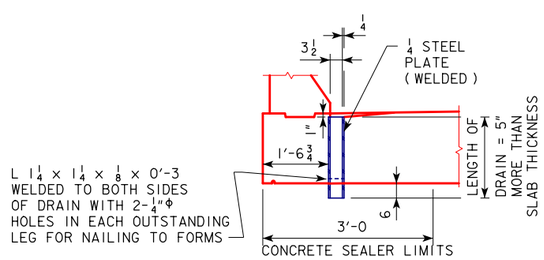

SECTION A-A

FLOOR DRAIN DETAILS

(USE FOR BARRIER RAIL ONLY, NOT REQUIRED FOR OPEN RAIL)

NOTE: DRAINS ARE TO BE GALVANIZED. INCLUDE COST OF DRAINS IN PRICE BID FOR "STRUCTURAL CONCRETE". 4 DRAINS REQUIRED.

WEIGHT OF ONE FLOOR DRAIN

SPAN	WEIGHT, LBS.	SPAN	WEIGHT, LBS.
70'-0	32	120'-0	41
80'-0	33	130'-0	43
90'-0	35	140'-0	45
100'-0	37	150'-0	48
110'-0	39		

LATEST REVISION DATE

APPROVED BY BRIDGE ENGINEER

IOWA DOT Highway Division

STANDARD DESIGN - 40' ROADWAY, 3 SPAN BRIDGES

CONTINUOUS CONCRETE SLAB BRIDGES

JULY, 2014

SUPERSTRUCTURE DETAILS
ALL BRIDGES
0° SKEW

J40-21-14

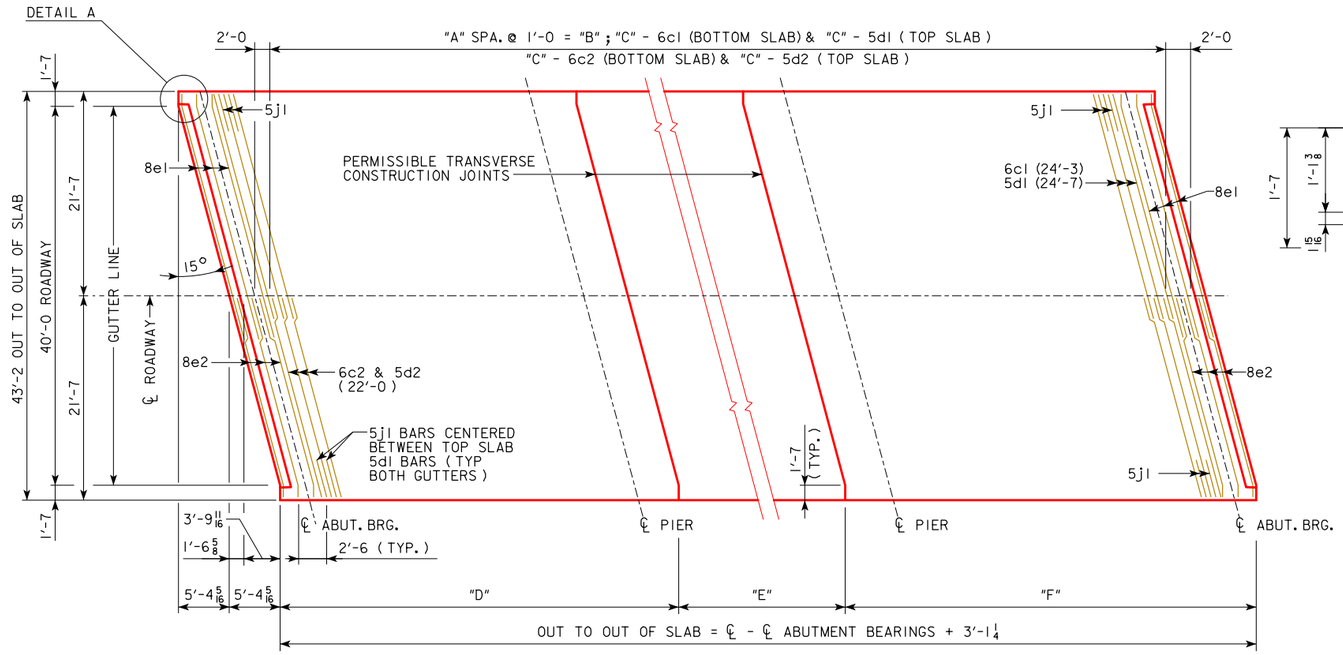

15° SKEW
TRANSVERSE REINFORCING STEEL LAYOUT

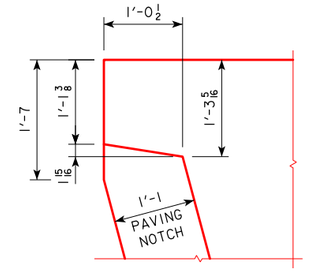

DETAIL A

15° TRANSV. REINF. DIMENSION TABLE

BRIDGE	"A"	"B"	"C"	"D"	"E"	"F"
70' BRIDGE	66	66'-0	67	28'-0 5/8	17'-0	28'-0 5/8
80' BRIDGE	76	76'-0	77	32'-0 5/8	19'-0	32'-0 5/8
90' BRIDGE	86	86'-0	87	36'-0 5/8	21'-0	36'-0 5/8
100' BRIDGE	96	96'-0	97	40'-0 5/8	23'-0	40'-0 5/8
110' BRIDGE	106	106'-0	107	44'-0 5/8	25'-0	44'-0 5/8
120' BRIDGE	116	116'-0	117	48'-0 5/8	27'-0	48'-0 5/8
130' BRIDGE	126	126'-0	127	52'-0 5/8	29'-0	52'-0 5/8
140' BRIDGE	136	136'-0	137	56'-0 5/8	31'-0	56'-0 5/8
150' BRIDGE	146	146'-0	147	60'-0 5/8	33'-0	60'-0 5/8

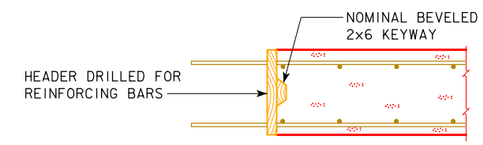

TRANSVERSE CONSTR. JOINT

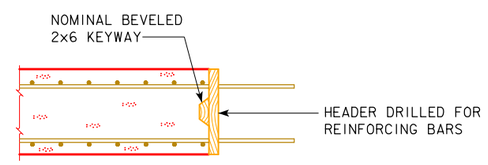

LONGITUDINAL CONSTR. JOINT

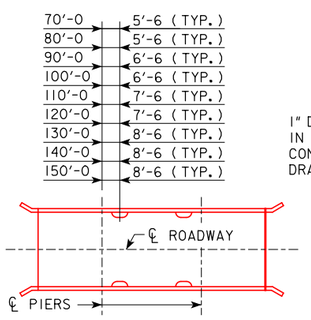

FLOOR DRAIN LOCATION

NOTE: 4" x 8" OUTSIDE DIMENSION ROLLED TUBE WITH 1/4" WALL THICKNESS MAY BE SUBSTITUTED FOR THE WELDED DRAIN SHOWN.

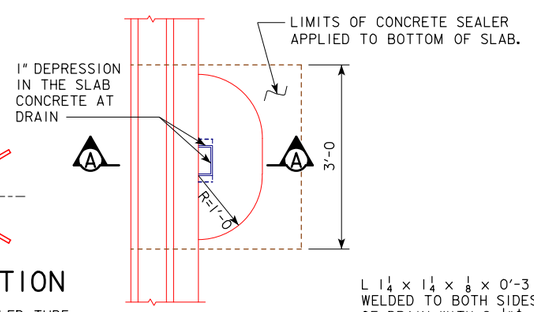

PART PLAN

FLOOR DRAIN DETAILS

(USE FOR BARRIER RAIL ONLY, NOT REQUIRED FOR OPEN RAIL)

NOTE: DRAINS ARE TO BE GALVANIZED. INCLUDE COST OF DRAINS IN PRICE BID FOR "STRUCTURAL CONCRETE". 4 DRAINS REQUIRED.

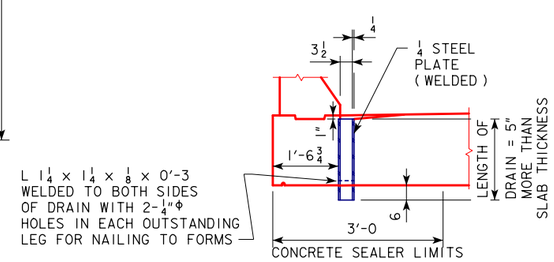

SECTION A-A

WEIGHT OF ONE FLOOR DRAIN			
SPAN	WEIGHT, LBS.	SPAN	WEIGHT, LBS.
70'-0	32	120'-0	41
80'-0	33	130'-0	43
90'-0	35	140'-0	45
100'-0	37	150'-0	48
110'-0	39		

LATEST REVISION DATE

APPROVED BY BRIDGE ENGINEER

IOWA DOT Highway Division

STANDARD DESIGN - 40' ROADWAY, 3 SPAN BRIDGES

CONTINUOUS CONCRETE SLAB BRIDGES

JULY, 2014

SUPERSTRUCTURE DETAILS
ALL BRIDGES
15° SKEW

J40-22-14

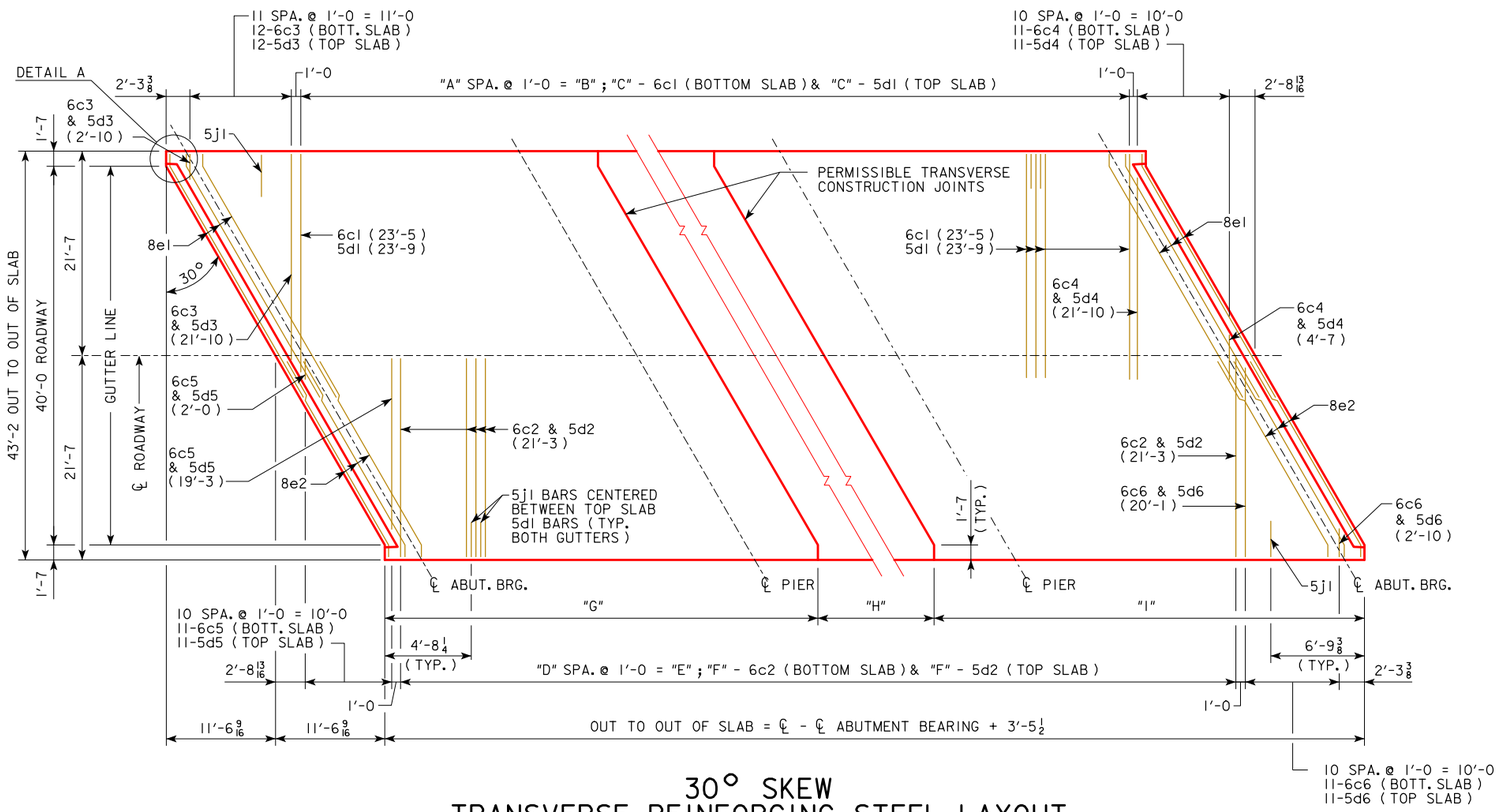

30° SKEW
TRANSVERSE REINFORCING STEEL LAYOUT

NOTE:
5d BARS ARE TO PASS UNDER
8e BARS IN CONFLICT AREAS.

30° TRANSV. REINFORCING DIMENSION TABLE

BRIDGE	"A"	"B"	"C"	"D"	"E"	"F"	"G"	"H"	"I"
70' BRIDGE	57	57'-0	58	58	58'-0	59	27'-8 1/2	17'-0	28'-9
80' BRIDGE	67	67'-0	68	68	68'-0	69	31'-8 1/2	19'-0	32'-9
90' BRIDGE	77	77'-0	78	78	78'-0	79	35'-8 1/2	21'-0	36'-9
100' BRIDGE	87	87'-0	88	88	88'-0	89	39'-8 1/2	23'-0	40'-9
110' BRIDGE	97	97'-0	98	98	98'-0	99	43'-8 1/2	25'-0	44'-9
120' BRIDGE	107	107'-0	108	108	108'-0	109	47'-8 1/2	27'-0	48'-9
130' BRIDGE	117	117'-0	118	118	118'-0	119	51'-8 1/2	29'-0	52'-9
140' BRIDGE	127	127'-0	128	128	128'-0	129	55'-8 1/2	31'-0	56'-9
150' BRIDGE	137	137'-0	138	138	138'-0	139	59'-8 1/2	33'-0	60'-9

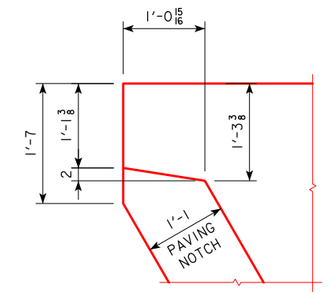

DETAIL A

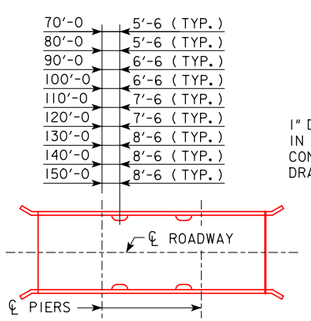

FLOOR DRAIN LOCATION

NOTE: 4" x 8" OUTSIDE DIMENSION ROLLED TUBE WITH 1/4" WALL THICKNESS MAY BE SUBSTITUTED FOR THE WELDED DRAIN SHOWN.

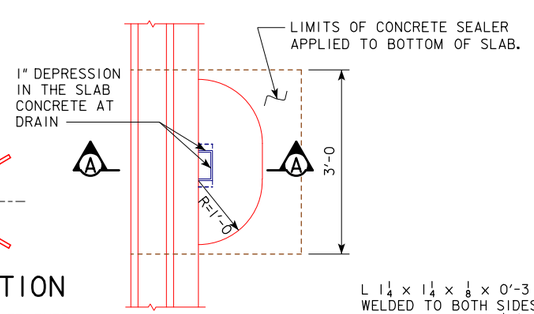

PART PLAN

FLOOR DRAIN DETAILS

(USE FOR BARRIER RAIL ONLY, NOT REQUIRED FOR OPEN RAIL)

NOTE: DRAINS ARE TO BE GALVANIZED. INCLUDE COST OF DRAINS IN PRICE BID FOR "STRUCTURAL CONCRETE". 4 DRAINS REQUIRED.

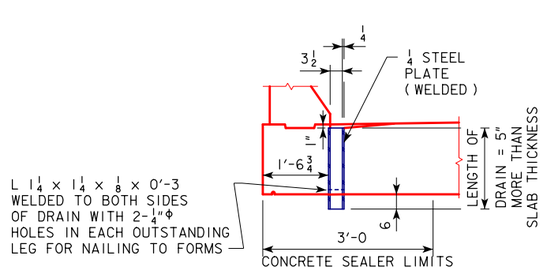

SECTION A-A

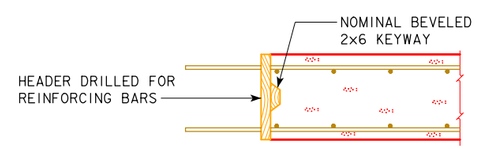

TRANSVERSE CONSTR. JOINT

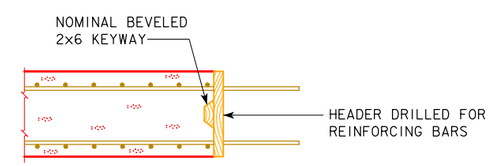

LONGITUDINAL CONSTR. JOINT

WEIGHT OF ONE FLOOR DRAIN			
SPAN	WEIGHT, LBS.	SPAN	WEIGHT, LBS.
70'-0	32	120'-0	41
80'-0	33	130'-0	43
90'-0	35	140'-0	45
100'-0	37	150'-0	48
110'-0	39		

LATEST REVISION DATE

APPROVED BY BRIDGE ENGINEER

IOWA DOT Highway Division

STANDARD DESIGN - 40' ROADWAY, 3 SPAN BRIDGES

CONTINUOUS CONCRETE SLAB BRIDGES

JULY, 2014

SUPERSTRUCTURE DETAILS
ALL BRIDGES

30° SKEW

J40-23-14

45° TRANSV. REINFORCING DIMENSION TABLE

BRIDGE	"A"	"B"	"C"	"D"	"E"	"F"	"G"	"H"	"I"
70' BRIDGE	47	47'-0	48	50	50'-0	51	27'-7	17'-0	29'-8
80' BRIDGE	57	57'-0	58	60	60'-0	61	31'-7	19'-0	33'-8
90' BRIDGE	67	67'-0	68	70	70'-0	71	35'-7	21'-0	37'-8
100' BRIDGE	77	77'-0	78	80	80'-0	81	39'-7	23'-0	41'-8
110' BRIDGE	87	87'-0	88	90	90'-0	91	43'-7	25'-0	45'-8
120' BRIDGE	97	97'-0	98	100	100'-0	101	47'-7	27'-0	49'-8
130' BRIDGE	107	107'-0	108	110	110'-0	111	51'-7	29'-0	53'-8
140' BRIDGE	117	117'-0	118	120	120'-0	121	55'-7	31'-0	57'-8
150' BRIDGE	127	127'-0	128	130	130'-0	131	59'-7	33'-0	61'-8

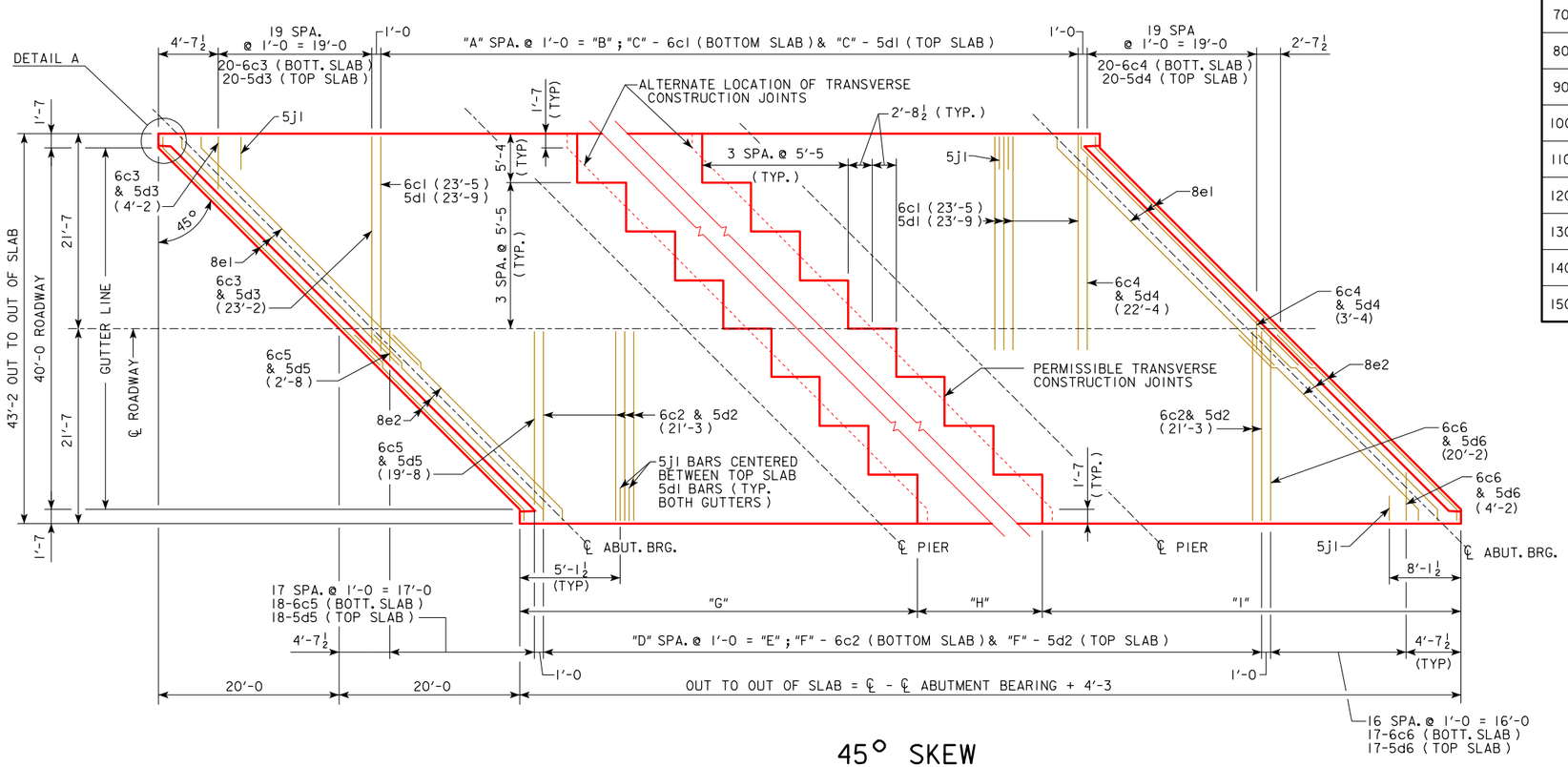

45° SKEW
TRANSVERSE REINFORCING STEEL LAYOUT

NOTE: 5d BARS ARE TO PASS UNDER 8e BARS IN CONFLICT AREAS.

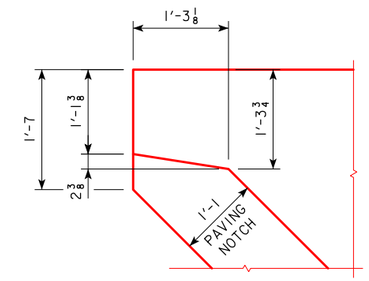

DETAIL A

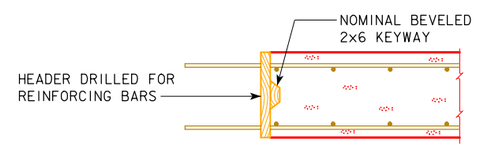

TRANSVERSE CONSTR. JOINT

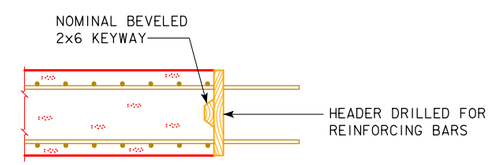

LONGITUDINAL CONSTR. JOINT

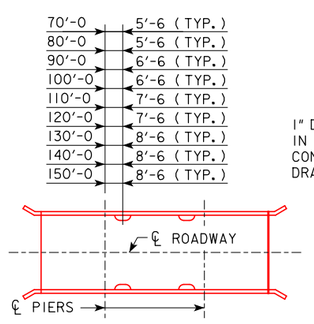

FLOOR DRAIN LOCATION

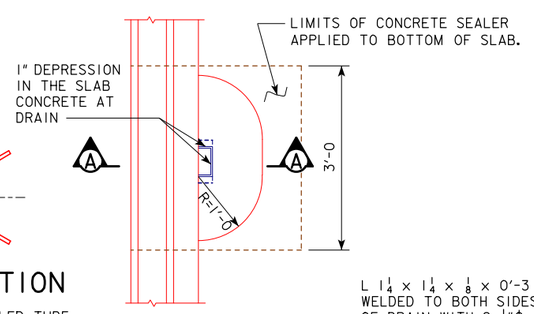

PART PLAN

NOTE: 4" x 8" OUTSIDE DIMENSION ROLLED TUBE WITH 1/4" WALL THICKNESS MAY BE SUBSTITUTED FOR THE WELDED DRAIN SHOWN.

FLOOR DRAIN DETAILS

(USE FOR BARRIER RAIL ONLY, NOT REQUIRED FOR OPEN RAIL)

NOTE: DRAINS ARE TO BE GALVANIZED. INCLUDE COST OF DRAINS IN PRICE BID FOR "STRUCTURAL CONCRETE". 4 DRAINS REQUIRED.

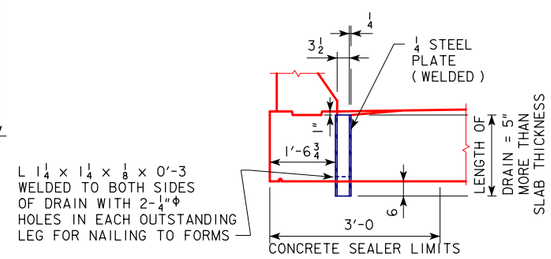

SECTION A-A

WEIGHT OF ONE FLOOR DRAIN			
SPAN	WEIGHT, LBS.	SPAN	WEIGHT, LBS.
70'-0	32	120'-0	41
80'-0	33	130'-0	43
90'-0	35	140'-0	45
100'-0	37	150'-0	48
110'-0	39		

LATEST REVISION DATE

APPROVED BY BRIDGE ENGINEER

IOWA DOT Highway Division

STANDARD DESIGN - 40' ROADWAY, 3 SPAN BRIDGES

CONTINUOUS CONCRETE SLAB BRIDGES

JULY, 2014

SUPERSTRUCTURE DETAILS ALL BRIDGES

45° SKEW

J40-24-14

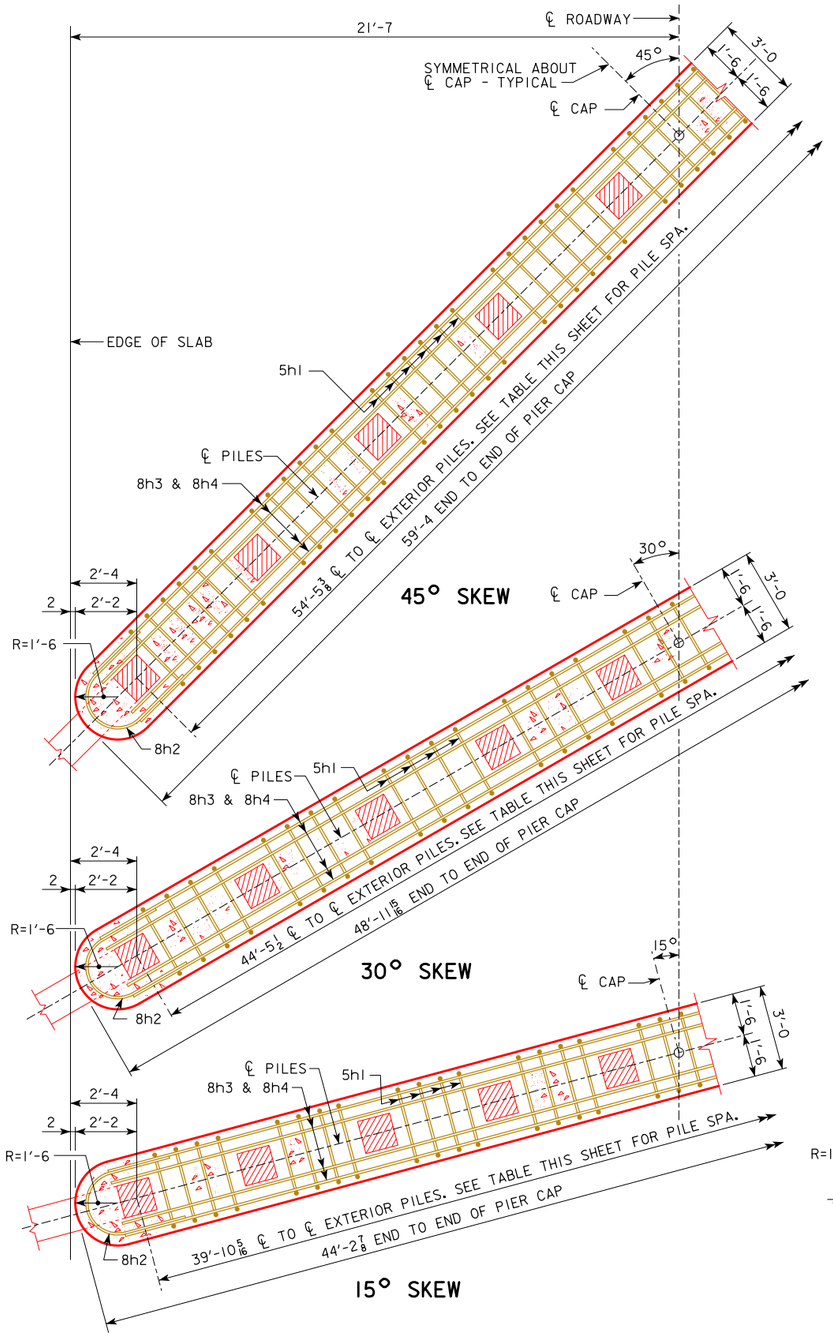

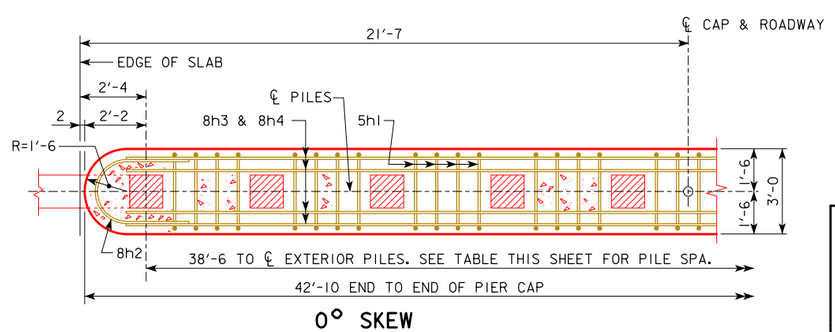

HALF SECTION BELOW SLAB

NOTE: NUMBER OF PILES AND STIRRUPS SHOWN ARE FOR A 70'-0 BRIDGE. CAP DIMENSIONS ARE TYPICAL FOR ALL BRIDGES.

TYPICAL NUMBERS OF PILES AND SPACINGS AND FACTORED PIER LOADS

	BRIDGE LENGTH	70'-0	80'-0	90'-0	100'-0	110'-0	120'-0	130'-0	140'-0	150'-0
①	TYP. NO. OF PILES	10	10	10	11	12	14	15	16	16
	TYP. PILE SPACES @ 0°	9 SPA. @ ABOUT 4'-3	9 SPA. @ ABOUT 4'-3	9 SPA. @ ABOUT 4'-3	10 SPA. @ ABOUT 3'-10	11 SPA. @ 3'-6	② 13 SPA. @ ABOUT 2'-11	③ 14 SPA. @ ABOUT 2'-9	③ 15 SPA. @ ABOUT 2'-7	③ 15 SPA. @ ABOUT 2'-7
	TYP. PILE SPACES @ 15°	9 SPA. @ ABOUT 4'-5	9 SPA. @ ABOUT 4'-5	9 SPA. @ ABOUT 4'-5	10 SPA. @ ABOUT 4'-0	11 SPA. @ ABOUT 3'-7	② 13 SPA. @ ABOUT 3'-0	③ 14 SPA. @ ABOUT 2'-10	③ 15 SPA. @ ABOUT 2'-8	③ 15 SPA. @ ABOUT 2'-8
	TYP. PILE SPACES @ 30°	9 SPA. @ ABOUT 4'-11	9 SPA. @ ABOUT 4'-11	9 SPA. @ ABOUT 4'-11	10 SPA. @ ABOUT 4'-5	11 SPA. @ ABOUT 4'-1	13 SPA. @ ABOUT 3'-5	② 14 SPA. @ ABOUT 3'-2	② 15 SPA. @ ABOUT 3'-0	② 15 SPA. @ ABOUT 3'-0
	TYP. PILE SPACES @ 45°	9 SPA. @ ABOUT 6'-1	9 SPA. @ ABOUT 6'-1	9 SPA. @ ABOUT 6'-1	10 SPA. @ ABOUT 5'-5	11 SPA. @ ABOUT 4'-11	13 SPA. @ ABOUT 4'-2	14 SPA. @ ABOUT 3'-11	15 SPA. @ ABOUT 3'-8	15 SPA. @ ABOUT 3'-8
④	PU, STRENGTH I DESIGN LOAD FOR PIER (KIPS)	812 KIPS	900 KIPS	1001 KIPS	1109 KIPS	1215 KIPS	1341 KIPS	1465 KIPS	1595 KIPS	1739 KIPS

① THIS TYPICAL NUMBER OF PILES MAY NEED TO BE MODIFIED DEPENDING ON SELECTED PIOL PILE TYPE AND SIZE, HEIGHT, AND RESISTANCE. IF THE NUMBER OF PILES IS DIFFERENT THAN IN THE TABLE FOR THE BRIDGE LENGTH, THE NUMBER OF 5h1 BARS AND OTHER QUANTITIES NEED TO BE CHECKED AND ADJUSTED AS NEEDED. PILES 10 INCHES AND 12 INCHES IN SIZE MUST BE SPACED 2'-6 OR MORE, PILES 14 INCHES IN SIZE MUST BE SPACED 2'-11 OR MORE, AND PILES 16 INCHES IN SIZE MUST BE SPACED 3'-4 OR MORE.

② MAXIMUM PIOL PILE SIZE AT THIS SPACING IS 14 INCHES.

③ MAXIMUM PIOL PILE SIZE AT THIS SPACING IS 12 INCHES.

④ STRENGTH I PIER DESIGN LOAD INCLUDES DYNAMIC LOAD ALLOWANCE (IM), AND PIER CAP WEIGHT IS BASED ON 45° SKEW. USE THIS PU FOR DETERMINING NUMBER OF PILES AND PILE LENGTH.

PIER NOTES:

ALL MONOLITHIC PIER CAP REINFORCING AND CONCRETE IS INCLUDED IN SUPERSTRUCTURE ESTIMATE OF QUANTITIES.

THE MINIMUM CLEAR DISTANCE FROM THE FACE OF THE CONCRETE TO NEAR REINFORCING BAR IS TO BE 2" UNLESS OTHERWISE NOTED OR SHOWN.

THE PIER PILES ARE TO BE DRIVEN TO FULL PENETRATION, IF PRACTICABLE, BUT IN NO CASE TO A BEARING VALUE LESS THAN THE PILE BEARING REQUIRED FOR EACH BRIDGE LENGTH AS SHOWN ON THIS SHEET. ADDITIONAL DRIVING CAPACITY MAY BE REQUIRED THROUGH SCOURABLE LAYERS. REFER TO GENERAL PLAN NOTES FOR ADDITIONAL INFORMATION.

CAP STEEL AS DETAILED ON PIOL STANDARD PILE DRAWING IS REQUIRED FOR MONOLITHIC PIER CAPS.

THE CONCRETE QUANTITIES ARE BASED ON THE USE OF TYPE 3 PILING. IF TYPE 1 OR TYPE 2 IS USED, THE CONCRETE QUANTITIES MAY BE ADJUSTED TO ACCOUNT FOR THE CONCRETE DISPLACED BY THE PILING.

ALL REINFORCING STEEL IS TO BE GRADE 60.

PIER PILING WAS DESIGNED FOR HL-93 LOADING WITH AN ALLOWANCE FOR 20 LBS. PER SQ. FT. FUTURE WEARING SURFACE.

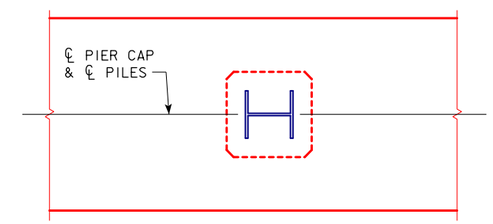

PILE ORIENTATION DETAIL FOR TYPE 3 TRESTLE BENT PILES

LATEST REVISION DATE

APPROVED BY BRIDGE ENGINEER

IOWA DOT Highway Division

STANDARD DESIGN - 40' ROADWAY, 3 SPAN BRIDGES

CONTINUOUS CONCRETE SLAB BRIDGES

JULY, 2014

MONOLITHIC PIER CAP DETAILS ALL BRIDGES

J40-25-14

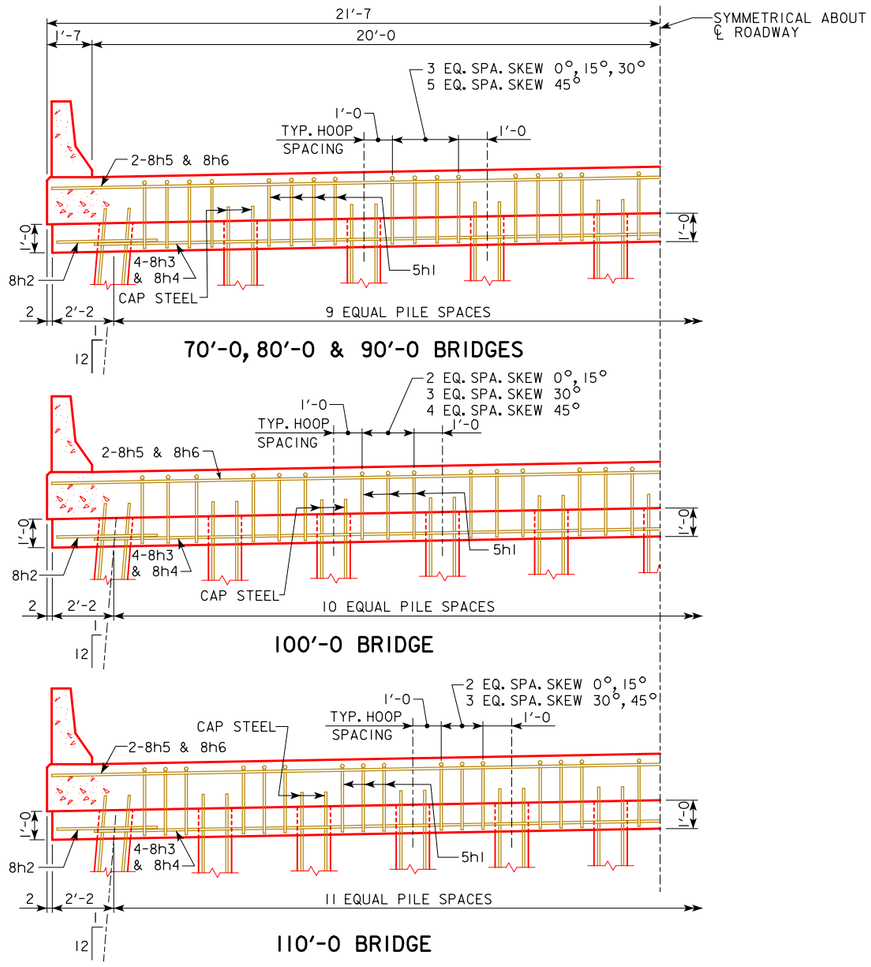

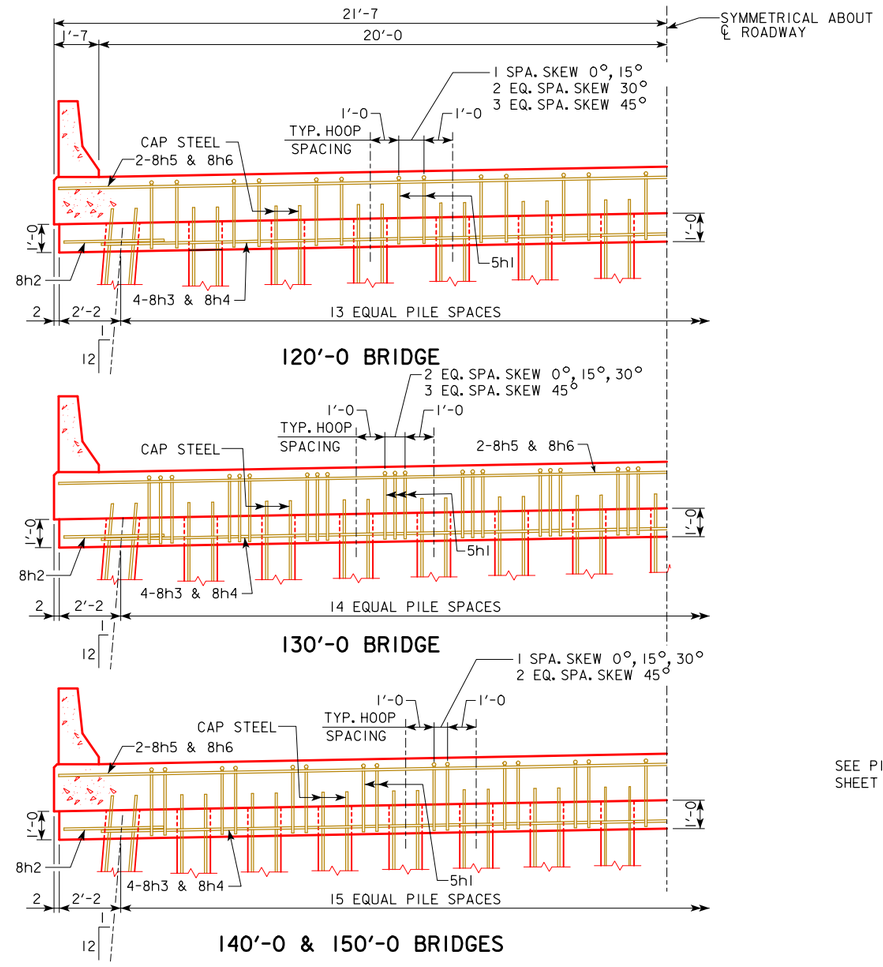

HALF SECTION NEAR PIER

SHOWING STIRRUP SPACING AND NUMBER OF PILING

NOTE: BOTTOM OF CAP ELEVATIONS WILL BE REQUIRED AT THE ℄ OF ROADWAY AND AT EACH EXTERIOR PILE.

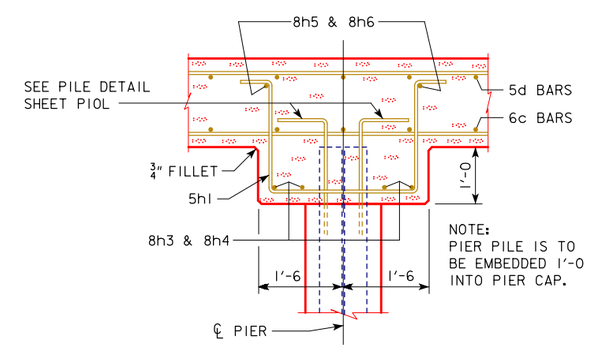

TYPICAL CAP SECTION

LATEST REVISION DATE

APPROVED BY BRIDGE ENGINEER

IOWA DOT Highway Division

STANDARD DESIGN - 40' ROADWAY, 3 SPAN BRIDGES

CONTINUOUS CONCRETE SLAB BRIDGES

JULY, 2014

MONOLITHIC PIER CAP DETAILS ALL BRIDGES

J40-26-14

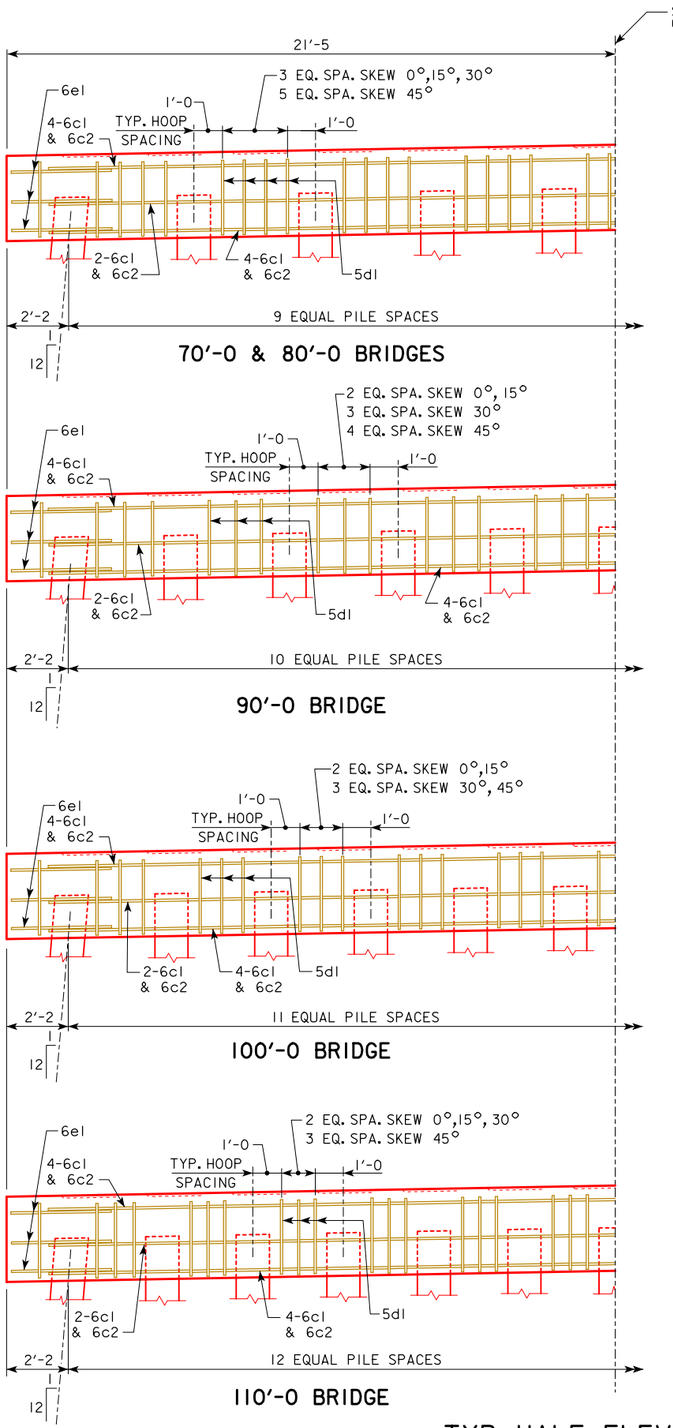

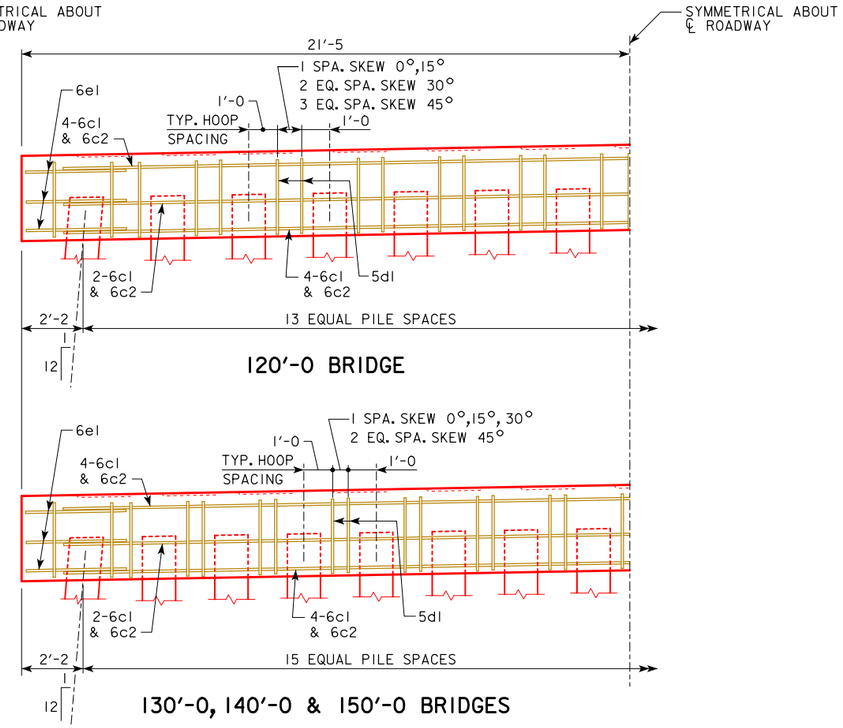

TYP. HALF ELEVATION PIER CAP
(LOOKING PARALLEL TO ℄ ROADWAY)

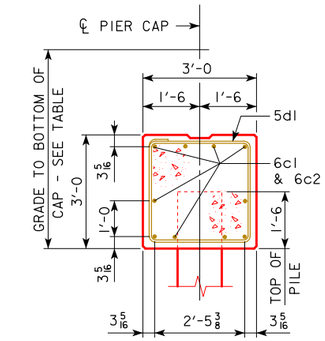

TYP. SECTION

GRADE TO BOTTOM OF CAP DIMENSION	
70'-0 BRIDGE	4'-9 3/16
80'-0 BRIDGE	4'-9 15/16
90'-0 BRIDGE	4'-10 15/16
100'-0 BRIDGE	5'-0 3/16
110'-0 BRIDGE	5'-1 3/16
120'-0 BRIDGE	5'-2 11/16
130'-0 BRIDGE	5'-3 15/16
140'-0 BRIDGE	5'-5 3/16
150'-0 BRIDGE	5'-6 11/16

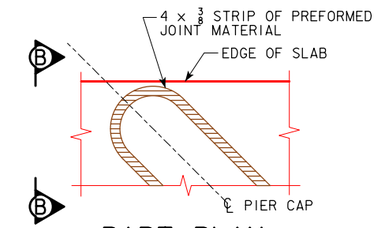

PART PLAN

SHOWING TREATMENT OF 4 x 3/8 STRIP OF PREFORMED JOINT MATERIAL AT ENDS OF PIER CAP. NOTE THAT JOINT MATERIAL IS TO GO ALL THE WAY AROUND PIER CAP FOR SQUARE AND SKEWED BRIDGES.

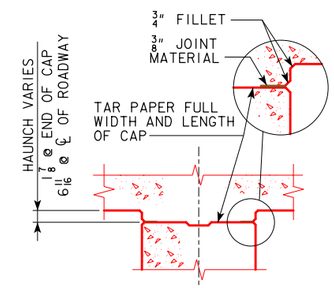

PART SECT A-A

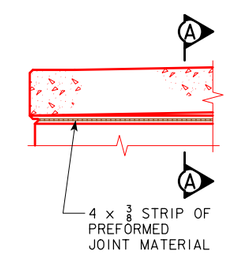

PART SECT B-B

LATEST REVISION DATE

APPROVED BY BRIDGE ENGINEER

IOWA DOT Highway Division

STANDARD DESIGN - 40' ROADWAY, 3 SPAN BRIDGES

CONTINUOUS CONCRETE SLAB BRIDGES

JULY, 2014

NON-MONOLITHIC PIER CAP DETAILS ALL BRIDGES

J40-27-14

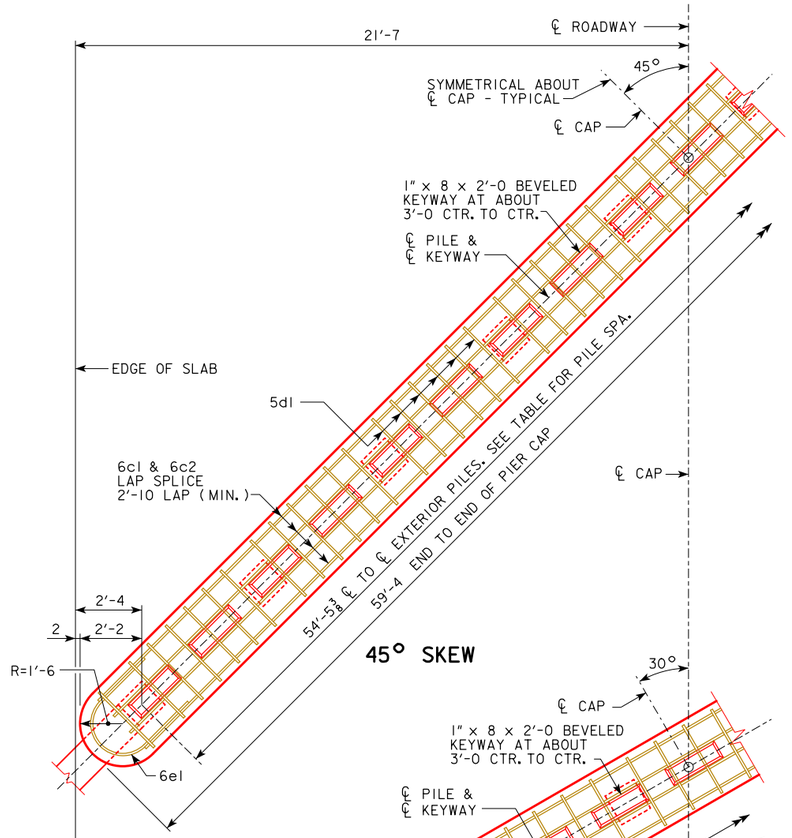

45° SKEW

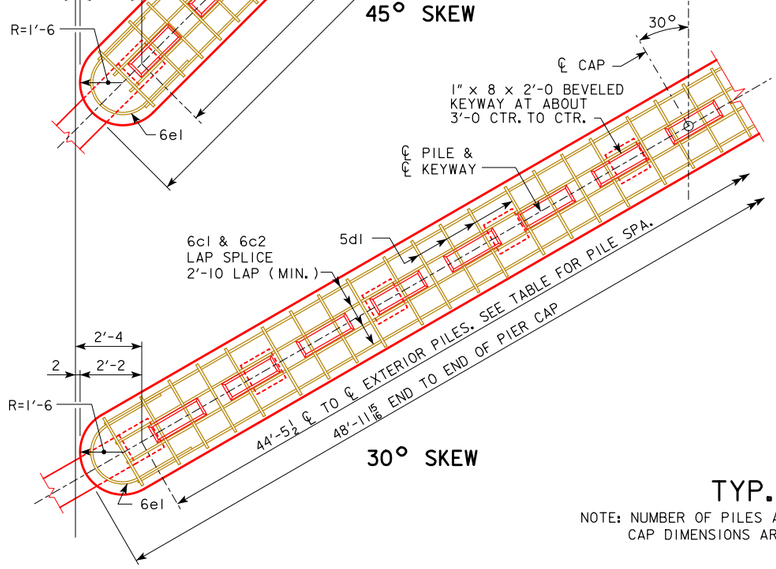

30° SKEW

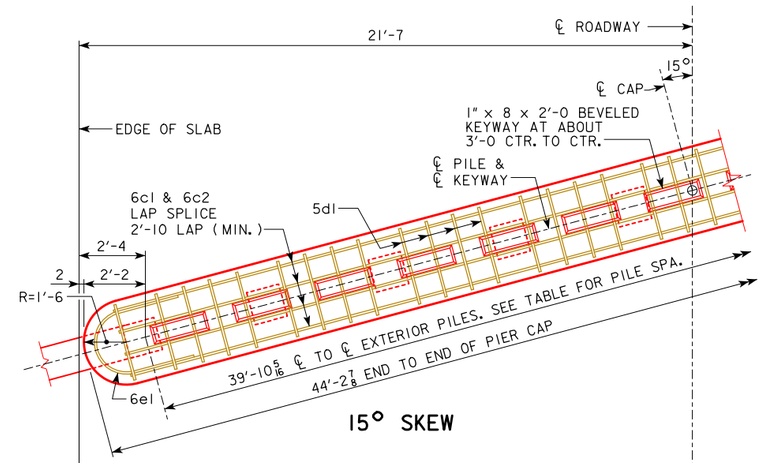

15° SKEW

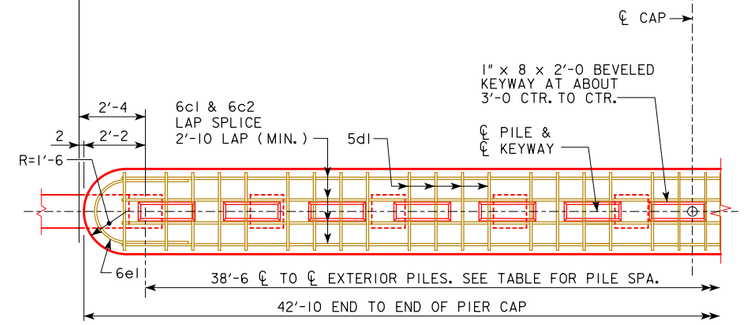

0° SKEW

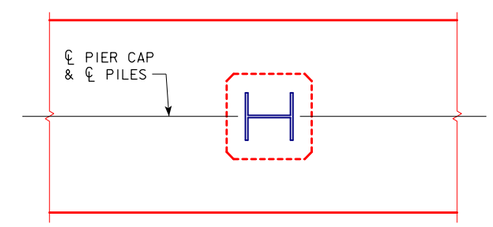

PILE ORIENTATION DETAIL FOR
TYPE 3 TRESTLE BENT PILES

TYP. HALF PLAN VIEW

NOTE: NUMBER OF PILES AND STIRRUPS SHOWN ARE FOR A 70'-0 BRIDGE.
CAP DIMENSIONS ARE TYPICAL FOR ALL BRIDGES.

LATEST REVISION DATE

APPROVED BY BRIDGE ENGINEER

IOWA DOT Highway Division

STANDARD DESIGN - 40' ROADWAY, 3 SPAN BRIDGES

CONTINUOUS CONCRETE
SLAB BRIDGES

JULY, 2014

NON-MONOLITHIC
PIER CAP DETAILS
ALL BRIDGES

J40-28-14

BILL OF EPOXY REINFORCING STEEL - ONE PIER

BRIDGE LENGTH			70'-0 BRIDGE			80'-0 BRIDGE			90'-0 BRIDGE			100'-0 BRIDGE			110'-0 BRIDGE			120'-0 BRIDGE			130'-0 BRIDGE			140'-0 BRIDGE			150'-0 BRIDGE		
MARK	SKEW	SHAPE	NO.	LENGTH	WEIGHT	NO.	LENGTH	WEIGHT	NO.	LENGTH	WEIGHT	NO.	LENGTH	WEIGHT	NO.	LENGTH	WEIGHT	NO.	LENGTH	WEIGHT	NO.	LENGTH	WEIGHT	NO.	LENGTH	WEIGHT	NO.	LENGTH	WEIGHT
6c1	0°		10	23'-0	346	10	23'-0	346	10	23'-0	346	10	23'-0	346	10	23'-0	346	10	23'-0	346	10	23'-0	346	10	23'-0	346	10	23'-0	346
	15°		10	23'-8	356	10	23'-8	356	10	23'-8	356	10	23'-8	356	10	23'-8	356	10	23'-8	356	10	23'-8	356	10	23'-8	356	10	23'-8	356
	30°		10	26'-0	391	10	26'-0	391	10	26'-0	391	10	26'-0	391	10	26'-0	391	10	26'-0	391	10	26'-0	391	10	26'-0	391	10	26'-0	391
	45°		10	31'-2	469	10	31'-2	469	10	31'-2	469	10	31'-2	469	10	31'-2	469	10	31'-2	469	10	31'-2	469	10	31'-2	469	10	31'-2	469
6c2	0°		10	19'-11	300	10	19'-11	300	10	19'-11	300	10	19'-11	300	10	19'-11	300	10	19'-11	300	10	19'-11	300	10	19'-11	300	10	19'-11	300
	15°		10	20'-7	310	10	20'-7	310	10	20'-7	310	10	20'-7	310	10	20'-7	310	10	20'-7	310	10	20'-7	310	10	20'-7	310	10	20'-7	310
	30°		10	23'-0	346	10	23'-0	346	10	23'-0	346	10	23'-0	346	10	23'-0	346	10	23'-0	346	10	23'-0	346	10	23'-0	346	10	23'-0	346
	45°		10	28'-2	424	10	28'-2	424	10	28'-2	424	10	28'-2	424	10	28'-2	424	10	28'-2	424	10	28'-2	424	10	28'-2	424	10	28'-2	424
5d1	0°		38	11'-8	463	38	11'-8	463	32	11'-8	390	35	11'-8	426	38	11'-8	463	28	11'-8	341	32	11'-8	390	32	11'-8	390	32	11'-8	390
	15°		38	11'-8	463	38	11'-8	463	32	11'-8	390	35	11'-8	426	38	11'-8	463	28	11'-8	341	32	11'-8	390	32	11'-8	390	32	11'-8	390
	30°		38	11'-8	463	38	11'-8	463	42	11'-8	512	46	11'-8	560	38	11'-8	463	41	11'-8	499	32	11'-8	390	32	11'-8	390	32	11'-8	390
	45°		56	11'-8	682	56	11'-8	682	52	11'-8	633	46	11'-8	560	50	11'-8	609	54	11'-8	658	47	11'-8	572	47	11'-8	572	47	11'-8	572
6e1	ALL		6	9'-7	86	6	9'-7	86	6	9'-7	86	6	9'-7	86	6	9'-7	86	6	9'-7	86	6	9'-7	86	6	9'-7	86	6	9'-7	86

BENT BAR DETAILS

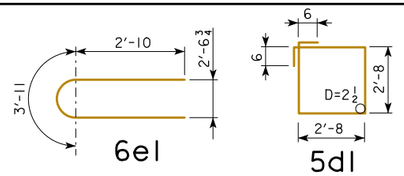

NOTE: DIMENSIONS ARE OUT TO OUT. D = PIN DIAMETER

ESTIMATED QUANTITIES - ONE PIER

BRIDGE LENGTH	SKEW	70'-0	80'-0	90'-0	100'-0	110'-0	120'-0	130'-0	140'-0	150'-0
STRUCTURAL CONCRETE (CU. YDS.)	0°	14.1	14.1	14.1	14.1	14.1	14.1	14.1	14.1	14.1
	15°	14.6	14.6	14.6	14.6	14.6	14.6	14.6	14.6	14.6
	30°	16.2	16.2	16.2	16.2	16.2	16.2	16.2	16.2	16.2
	45°	19.6	19.6	19.6	19.6	19.6	19.6	19.6	19.6	19.6
REINFORCING STEEL EPOXY COATED (LBS.)	0°	1195	1195	1122	1158	1195	1073	1122	1122	1122
	15°	1215	1215	1142	1178	1215	1093	1142	1142	1142
	30°	1286	1286	1335	1383	1286	1322	1213	1213	1213
	45°	1661	1661	1612	1539	1588	1637	1551	1551	1551
④ PILING (NO.)	ALL	10	10	11	12	13	14	16	16	16

TYPICAL NUMBERS OF PILES AND SPACINGS AND FACTORED PIER LOADS

	BRIDGE LENGTH	70'-0	80'-0	90'-0	100'-0	110'-0	120'-0	130'-0	140'-0	150'-0
①	TYP. NO. OF PILES	10	10	11	12	13	14	16	16	16
	TYP. PILE SPACES @ 0°	9 SPA. @ ABOUT 4'-3	9 SPA. @ ABOUT 4'-3	10 SPA. @ ABOUT 3'-10	11 SPA. @ 3'-6	② 12 SPA. @ ABOUT 3'-2	② 13 SPA. @ ABOUT 3'-0	③ 15 SPA. @ ABOUT 2'-7	③ 15 SPA. @ ABOUT 2'-7	③ 15 SPA. @ ABOUT 2'-7
	TYP. PILE SPACES @ 15°	9 SPA. @ ABOUT 4'-5	9 SPA. @ ABOUT 4'-5	10 SPA. @ ABOUT 4'-0	11 SPA. @ ABOUT 3'-7	12 SPA. @ ABOUT 3'-4	② 13 SPA. @ ABOUT 3'-1	③ 15 SPA. @ ABOUT 2'-8	③ 15 SPA. @ ABOUT 2'-8	③ 15 SPA. @ ABOUT 2'-8
	TYP. PILE SPACES @ 30°	9 SPA. @ ABOUT 4'-11	9 SPA. @ ABOUT 4'-11	10 SPA. @ ABOUT 4'-5	11 SPA. @ ABOUT 4'-1	12 SPA. @ ABOUT 3'-8	13 SPA. @ ABOUT 3'-5	② 15 SPA. @ ABOUT 3'-0	② 15 SPA. @ ABOUT 3'-0	② 15 SPA. @ ABOUT 3'-0
	TYP. PILE SPACES @ 45°	9 SPA. @ ABOUT 6'-1	9 SPA. @ ABOUT 6'-1	10 SPA. @ ABOUT 5'-5	11 SPA. @ ABOUT 4'-11	12 SPA. @ ABOUT 4'-6	13 SPA. @ ABOUT 4'-2	15 SPA. @ ABOUT 3'-8	15 SPA. @ ABOUT 3'-8	15 SPA. @ ABOUT 3'-8
④	PU, STRENGTH I DESIGN LOAD FOR PIER (KIPS)	890 KIPS	978 KIPS	1079 KIPS	1187 KIPS	1293 KIPS	1419 KIPS	1543 KIPS	1672 KIPS	1817 KIPS

① THIS TYPICAL NUMBER OF PILES MAY NEED TO BE MODIFIED DEPENDING ON SELECTED PIOL PILE TYPE AND SIZE, HEIGHT, AND RESISTANCE. IF THE NUMBER OF PILES IS DIFFERENT THAN IN THE TABLE FOR THE BRIDGE LENGTH, THE NUMBER OF 5d1 BARS AND OTHER QUANTITIES NEED TO BE CHECKED AND ADJUSTED AS NEEDED. PILES 10 INCHES AND 12 INCHES IN SIZE MUST BE SPACED 2'-6 OR MORE, PILES 14 INCHES IN SIZE MUST BE SPACED 2'-11 OR MORE, AND PILES 16 INCHES IN SIZE MUST BE SPACED 3'-4 OR MORE.

② MAXIMUM PIOL PILE SIZE AT THIS SPACING IS 14 INCHES.

③ MAXIMUM PIOL PILE SIZE AT THIS SPACING IS 12 INCHES.

④ STRENGTH I PIER DESIGN LOAD INCLUDES DYNAMIC LOAD ALLOWANCE (IM), AND PIER CAP WEIGHT IS BASED ON 45° SKEW. USE THIS PU FOR DETERMINING NUMBER OF PILES AND PILE LENGTH.

PIER NOTES:

FOR SKEWED BRIDGES BOTTOM OF PIER CAP IS TO BE SLOPED TO COMPENSATE FOR GRADE. THEREFORE BOTTOM OF CAP ELEVATIONS WILL BE REQUIRED AT THE ℄ OF ROADWAY AND AT EACH EXTERIOR PILE.

THE MINIMUM CLEAR DISTANCE FROM THE FACE OF THE CONCRETE TO NEAR REINFORCING BAR IS TO BE 2 INCHES UNLESS OTHERWISE NOTED OR SHOWN.

THE PIER PILES ARE TO BE DRIVEN TO FULL PENETRATION, IF PRACTICABLE, BUT IN NO CASE TO A BEARING VALUE LESS THAN THE PILE BEARING REQUIRED FOR EACH BRIDGE LENGTH AS SHOWN ON THIS SHEET.

THE CONCRETE QUANTITIES ARE BASED ON THE USE OF TYPE 3 PILING. IF TYPE I OR TYPE 2 IS USED, THE CONCRETE QUANTITIES MAY BE ADJUSTED TO ACCOUNT FOR THE CONCRETE DISPLACED BY THE PILING.

ALL REINFORCING STEEL IS TO BE GRADE 60.

PIER PILING WAS DESIGNED FOR HL-93 LOADING WITH AN ALLOWANCE FOR 20 LBS. PER SQ. FT. FUTURE WEARING SURFACE.

LATEST REVISION DATE

APPROVED BY BRIDGE ENGINEER

IOWA DOT Highway Division

STANDARD DESIGN - 40' ROADWAY, 3 SPAN BRIDGES

CONTINUOUS CONCRETE SLAB BRIDGES

JULY, 2014

NON-MONOLITHIC PIER CAP DETAILS ALL BRIDGES

J40-29-14

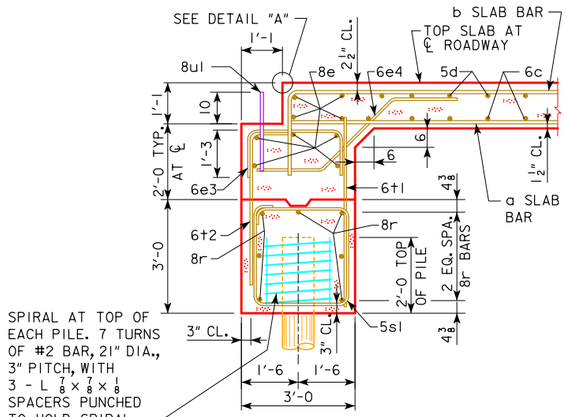

SECTION NORMAL TO ABUTMENT AT ℄

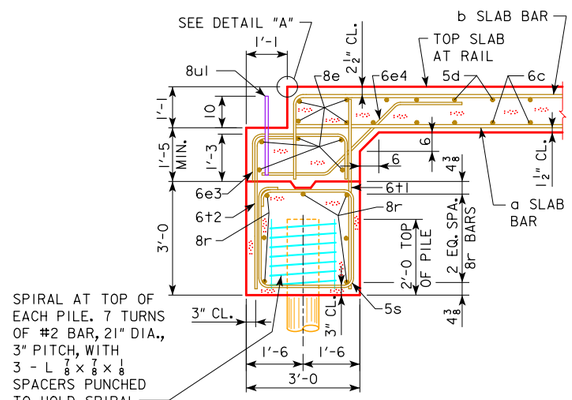

SECTION NORMAL TO ABUTMENT AT GUTTERLINE

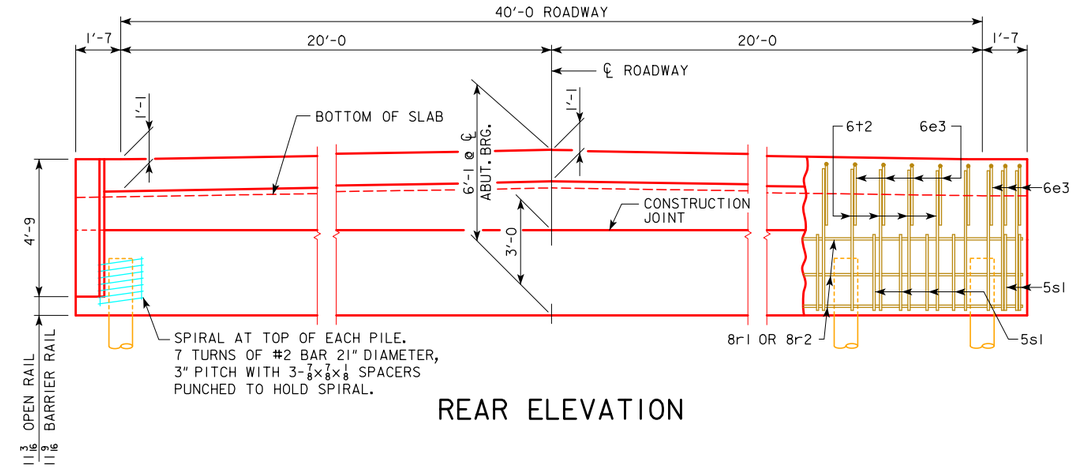

REAR ELEVATION

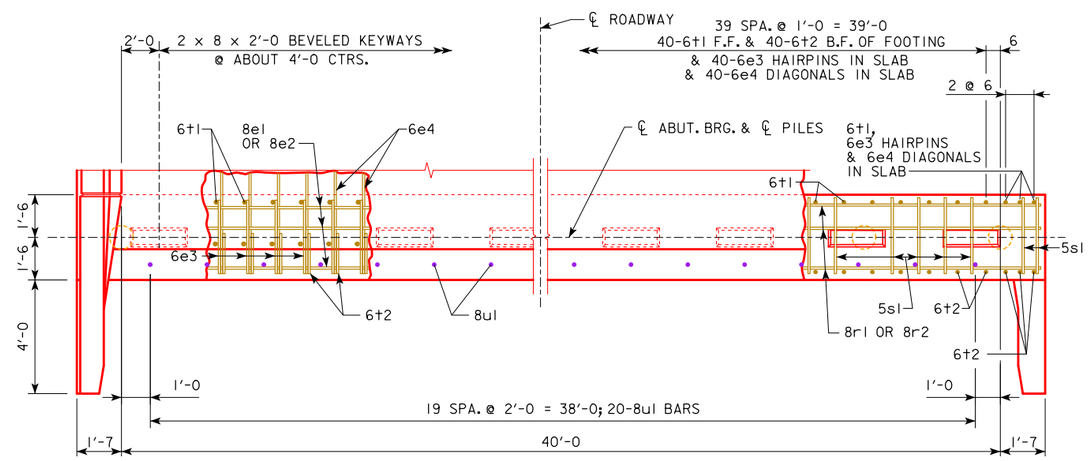

PLAN VIEW

NOTE: WING REINFORCING AND RAIL NOT SHOWN.

6e3, 6e4, AND 8e ARE INCLUDED WITH SUPERSTRUCTURE QUANTITIES.

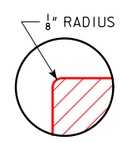

DETAIL "A"

ABUTMENT NOTES:

THE CONCRETE AND REINFORCING STEEL FOR THE WINGS IS INCLUDED WITH THE SUPERSTRUCTURE.

DETAILS ON THIS SHEET ARE TO BE USED ONLY WHEN ABUTMENTS ARE PLACED ON TIMBER PILES.

THE MINIMUM CLEAR DISTANCE FROM THE FACE OF THE CONCRETE TO NEAR REINFORCING BAR IS TO BE 2 INCHES UNLESS OTHERWISE NOTED OR SHOWN.

TIMBER PILES SHALL BE DRIVEN TO FULL PENETRATION IF PRACTICABLE BUT IN NO CASE TO A BEARING VALUE LESS THAN SHOWN IN DESIGN PLANS. TIMBER PILES SHALL NOT BE DRIVEN TO MORE THAN 160 TONS.

ALL REINFORCING STEEL IS TO BE GRADE 60.

ABUTMENT PILING WAS DESIGNED FOR HL-93 LOADING WITH AN ALLOWANCE FOR 20 LBS. PER SQ. FT. FUTURE WEARING SURFACE.

NUMBER OF PILES AND ABUTMENT DESIGN LOADS

BRIDGE LENGTH	70'-0	80'-0	90'-0	100'-0	110'-0	120'-0	130'-0	140'-0	150'-0
PILING - NUMBER	10	10	11	11	12	13	13	15	16
PU, STRENGTH I DESIGN LOAD - KIPS	483	515	546	585	623	666	708	Δ 830	Δ 879

Δ INCLUDES DYNAMIC LOAD ALLOWANCE

NOTE: PU, STRENGTH I DESIGN LOAD (KIPS) IS NOT THE VALUE USED IN THE FIELD FOR DRIVING PILES.

03-2016
LATEST REVISION DATE

APPROVED BY BRIDGE ENGINEER

IOWA DOT Highway Division

STANDARD DESIGN - 40' ROADWAY, 3 SPAN BRIDGES

CONTINUOUS CONCRETE SLAB BRIDGES

JULY, 2014

ABUTMENT DETAILS
0° SKEW - TIMBER PILING

J40-30-14

REVISED 03-2016 - REVISION FOR ADDITION OF PAVING NOTCH BAR 8u1.

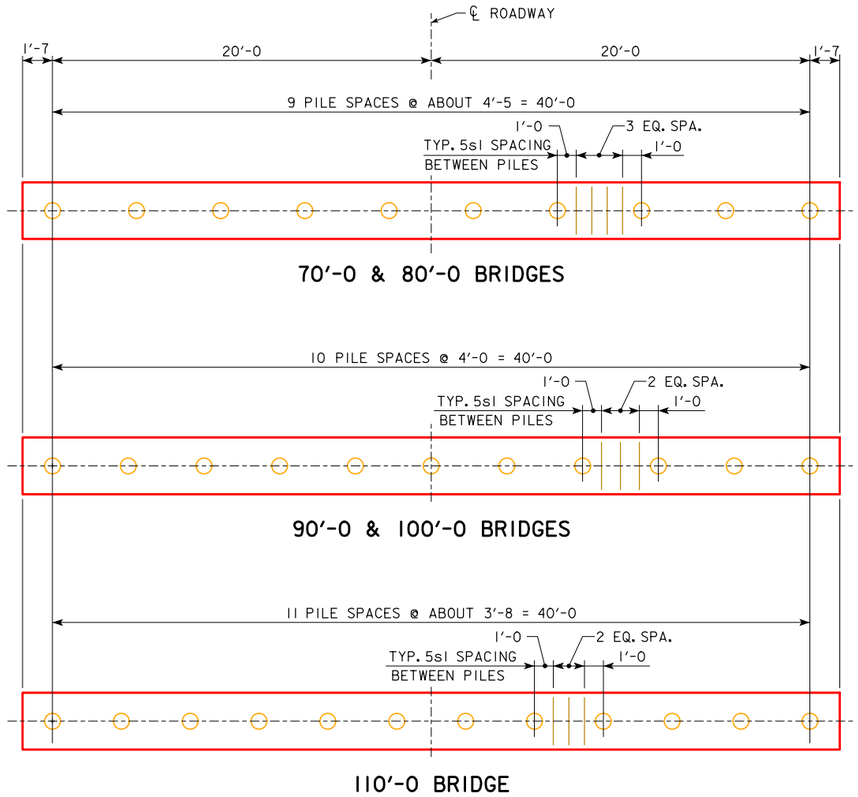

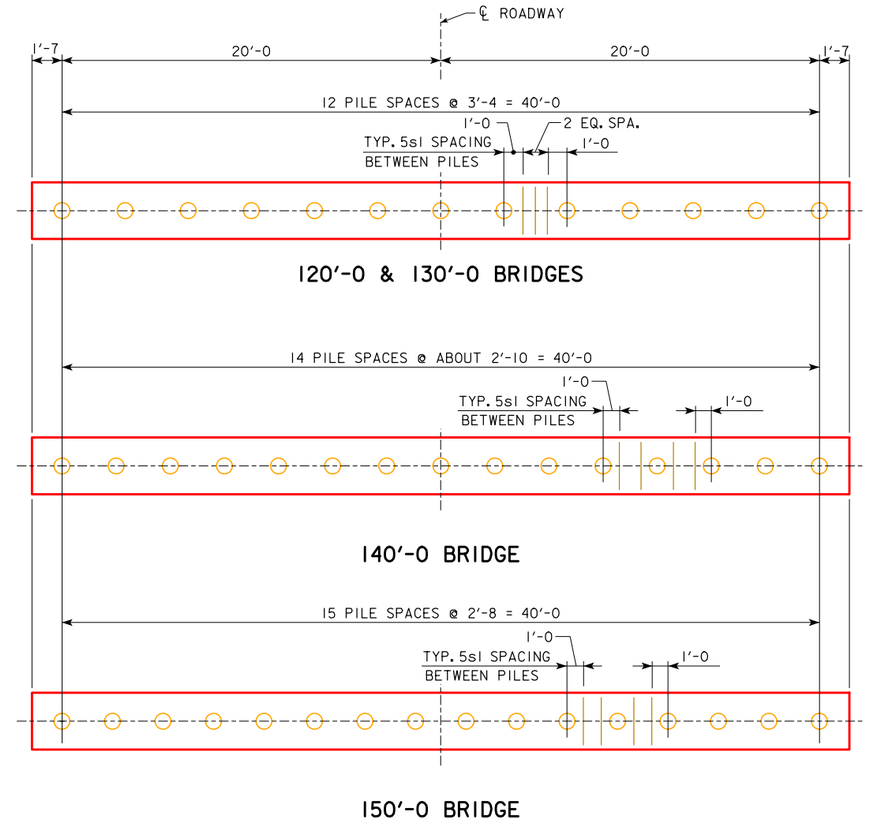

PILE PLAN - 0° SKEW
WOOD PILING

LATEST REVISION DATE

APPROVED BY BRIDGE ENGINEER

IOWADOT Highway Division

STANDARD DESIGN - 40' ROADWAY, 3 SPAN BRIDGES

CONTINUOUS CONCRETE SLAB BRIDGES

JULY, 2014

ABUTMENT DETAILS
0° SKEW - TIMBER PILING

J40-31-14

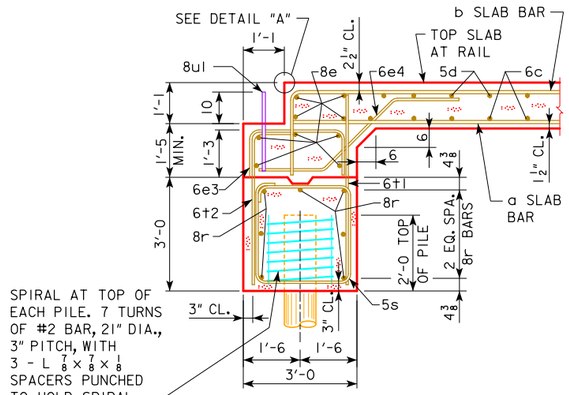

SECTION NORMAL TO ABUTMENT AT GUTTERLINE

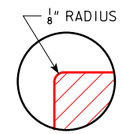

DETAIL "A"

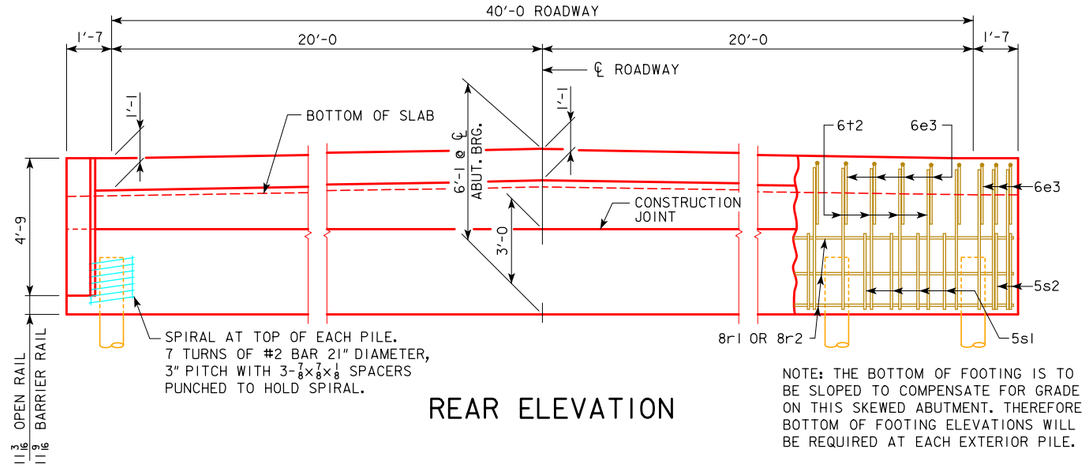

REAR ELEVATION

NOTE: THE BOTTOM OF FOOTING IS TO BE SLOPED TO COMPENSATE FOR GRADE ON THIS SKEWED ABUTMENT. THEREFORE BOTTOM OF FOOTING ELEVATIONS WILL BE REQUIRED AT EACH EXTERIOR PILE.

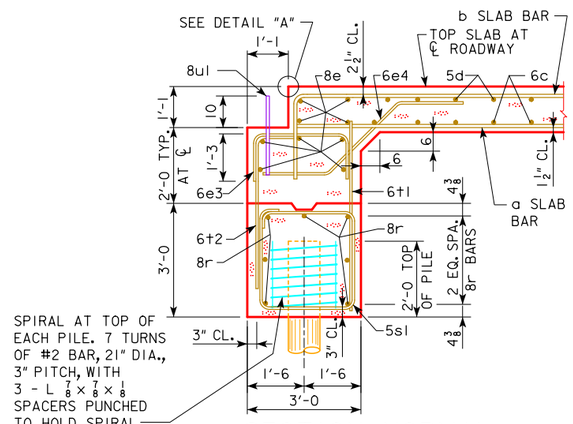

SECTION NORMAL TO ABUTMENT AT ℄

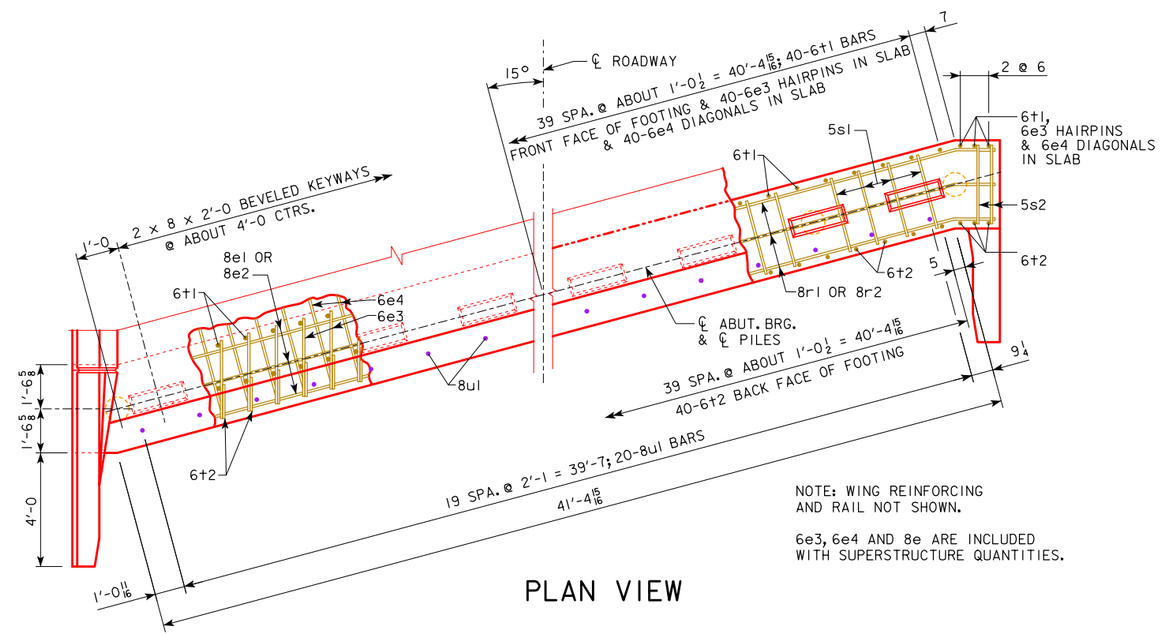

PLAN VIEW

NOTE: WING REINFORCING AND RAIL NOT SHOWN.

6e3, 6e4 AND 8e ARE INCLUDED WITH SUPERSTRUCTURE QUANTITIES.

ABUTMENT NOTES:

THE CONCRETE AND REINFORCING STEEL FOR THE WINGS IS INCLUDED WITH THE SUPERSTRUCTURE.

DETAILS ON THIS SHEET ARE TO BE USED ONLY WHEN ABUTMENTS ARE PLACED ON TIMBER PILES.

THE MINIMUM CLEAR DISTANCE FROM THE FACE OF THE CONCRETE TO NEAR REINFORCING BAR IS TO BE 2 INCHES UNLESS OTHERWISE NOTED OR SHOWN.

TIMBER PILES SHALL BE DRIVEN TO FULL PENETRATION IF PRACTICABLE BUT IN NO CASE TO A BEARING VALUE LESS THAN SHOWN IN DESIGN PLANS. TIMBER PILES SHALL NOT BE DRIVEN TO MORE THAN 160 TONS.

ALL REINFORCING STEEL IS TO BE GRADE 60.

ABUTMENT PILING WAS DESIGNED FOR HL-93 LOADING WITH AN ALLOWANCE FOR 20 LBS. PER SQ. FT. FUTURE WEARING SURFACE.

NUMBER OF PILES AND ABUTMENT DESIGN LOADS

BRIDGE LENGTH	70'-0	80'-0	90'-0	100'-0	110'-0	120'-0	130'-0	140'-0	150'-0
PILING - NUMBER	10	10	11	11	12	13	13	15	16
PU, STRENGTH I DESIGN LOAD - KIPS	488	520	550	590	627	671	713	Δ 835	Δ 884

Δ INCLUDES DYNAMIC LOAD ALLOWANCE

NOTE: PU, STRENGTH I DESIGN LOAD (KIPS) IS NOT THE VALUE USED IN THE FIELD FOR DRIVING PILES.

03-2016
LATEST REVISION DATE

APPROVED BY BRIDGE ENGINEER

IOWA DOT Highway Division

STANDARD DESIGN - 40' ROADWAY, 3 SPAN BRIDGES

CONTINUOUS CONCRETE SLAB BRIDGES

JULY, 2014

ABUTMENT DETAILS 15° SKEW - TIMBER PILING

J40-32-14

REVISED 03-2016 - REVISION FOR ADDITION OF PAVING NOTCH BAR 8ul.

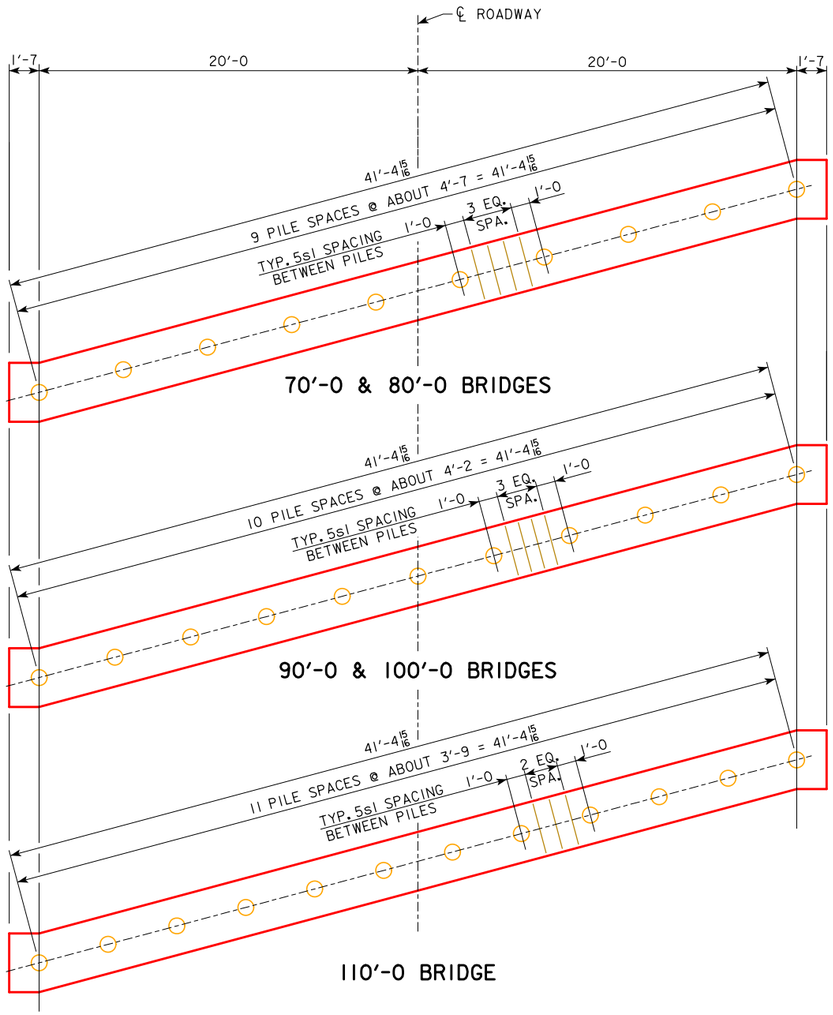

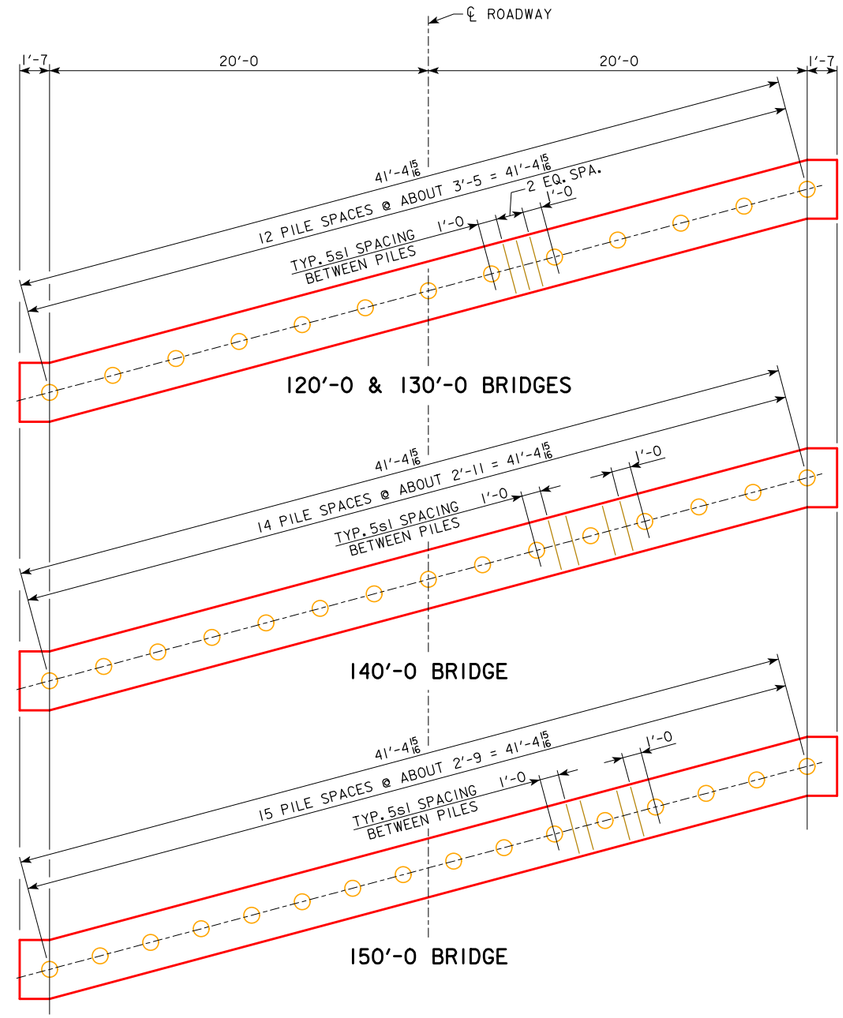

PILE PLAN - 15° SKEW WOOD PILING

LATEST REVISION DATE

APPROVED BY BRIDGE ENGINEER

IOWA DOT Highway Division

STANDARD DESIGN - 40' ROADWAY, 3 SPAN BRIDGES

CONTINUOUS CONCRETE SLAB BRIDGES

JULY, 2014

ABUTMENT DETAILS 15° SKEW - TIMBER PILING

J40-33-14

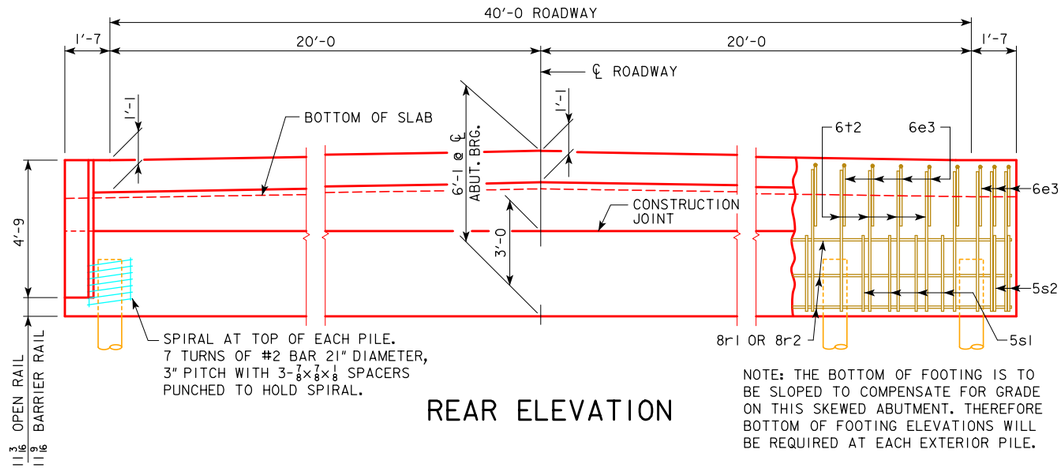

NOTE: THE BOTTOM OF FOOTING IS TO BE SLOPED TO COMPENSATE FOR GRADE ON THIS SKEWED ABUTMENT. THEREFORE BOTTOM OF FOOTING ELEVATIONS WILL BE REQUIRED AT EACH EXTERIOR PILE.

REAR ELEVATION

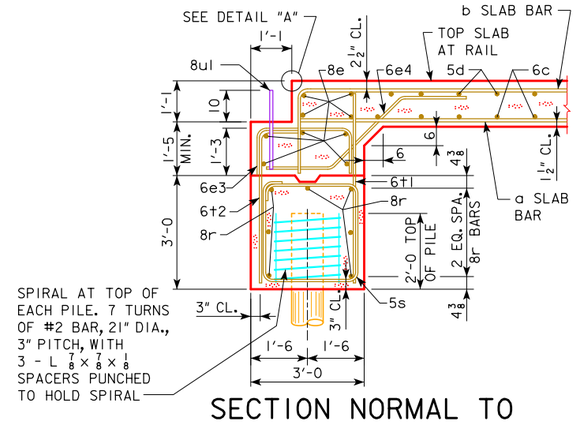

SECTION NORMAL TO ABUTMENT AT GUTTERLINE

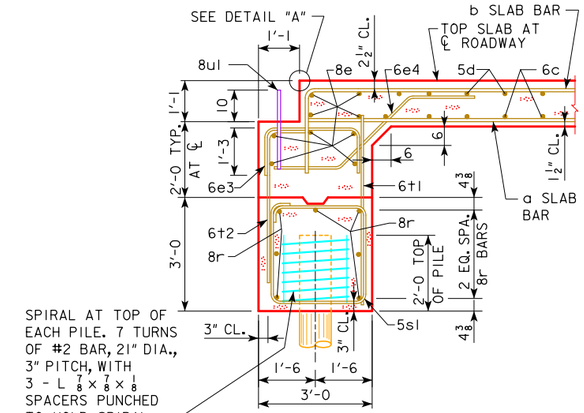

SECTION NORMAL TO ABUTMENT AT ℄

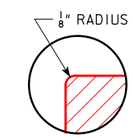

DETAIL "A"

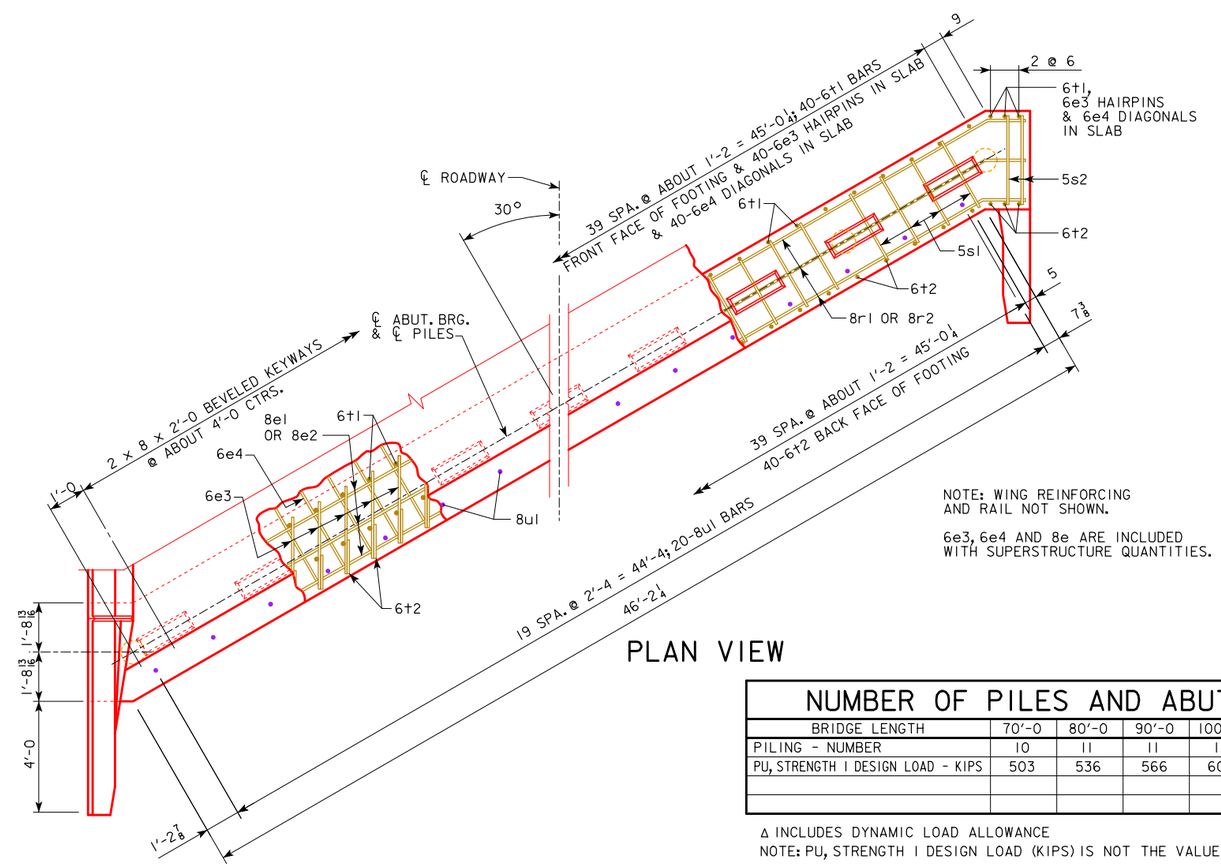

NOTE: WING REINFORCING AND RAIL NOT SHOWN.

6e3, 6e4 AND 8e ARE INCLUDED WITH SUPERSTRUCTURE QUANTITIES.

PLAN VIEW

ABUTMENT NOTES:

THE CONCRETE AND REINFORCING STEEL FOR THE WINGS IS INCLUDED WITH THE SUPERSTRUCTURE.

DETAILS ON THIS SHEET ARE TO BE USED ONLY WHEN ABUTMENTS ARE PLACED ON TIMBER PILES.

THE MINIMUM CLEAR DISTANCE FROM THE FACE OF THE CONCRETE TO NEAR REINFORCING BAR IS TO BE 2 INCHES UNLESS OTHERWISE NOTED OR SHOWN.

TIMBER PILES SHALL BE DRIVEN TO FULL PENETRATION IF PRACTICABLE BUT IN NO CASE TO A BEARING VALUE LESS THAN SHOWN IN DESIGN PLANS. TIMBER PILES SHALL NOT BE DRIVEN TO MORE THAN 160 TONS.

ALL REINFORCING STEEL IS TO BE GRADE 60.

ABUTMENT PILING WAS DESIGNED FOR HL-93 LOADING WITH AN ALLOWANCE FOR 20 LBS. PER SQ. FT. FUTURE WEARING SURFACE.

NUMBER OF PILES AND ABUTMENT DESIGN LOADS

BRIDGE LENGTH	70'-0	80'-0	90'-0	100'-0	110'-0	120'-0	130'-0	140'-0	150'-0
PILING - NUMBER	10	11	11	12	12	13	14	16	17
PU, STRENGTH I DESIGN LOAD - KIPS	503	536	566	606	644	687	729	Δ 852	Δ 901

Δ INCLUDES DYNAMIC LOAD ALLOWANCE

NOTE: PU, STRENGTH I DESIGN LOAD (KIPS) IS NOT THE VALUE USED IN THE FIELD FOR DRIVING PILES.

03-2016
LATEST REVISION DATE

APPROVED BY BRIDGE ENGINEER

IOWA DOT Highway Division

STANDARD DESIGN - 40' ROADWAY, 3 SPAN BRIDGES

CONTINUOUS CONCRETE SLAB BRIDGES

JULY, 2014

ABUTMENT DETAILS 30° SKEW - TIMBER PILING

J40-34-14

REVISED 03-2016 - REVISION FOR ADDITION OF PAVING NOTCH BAR 8u1.

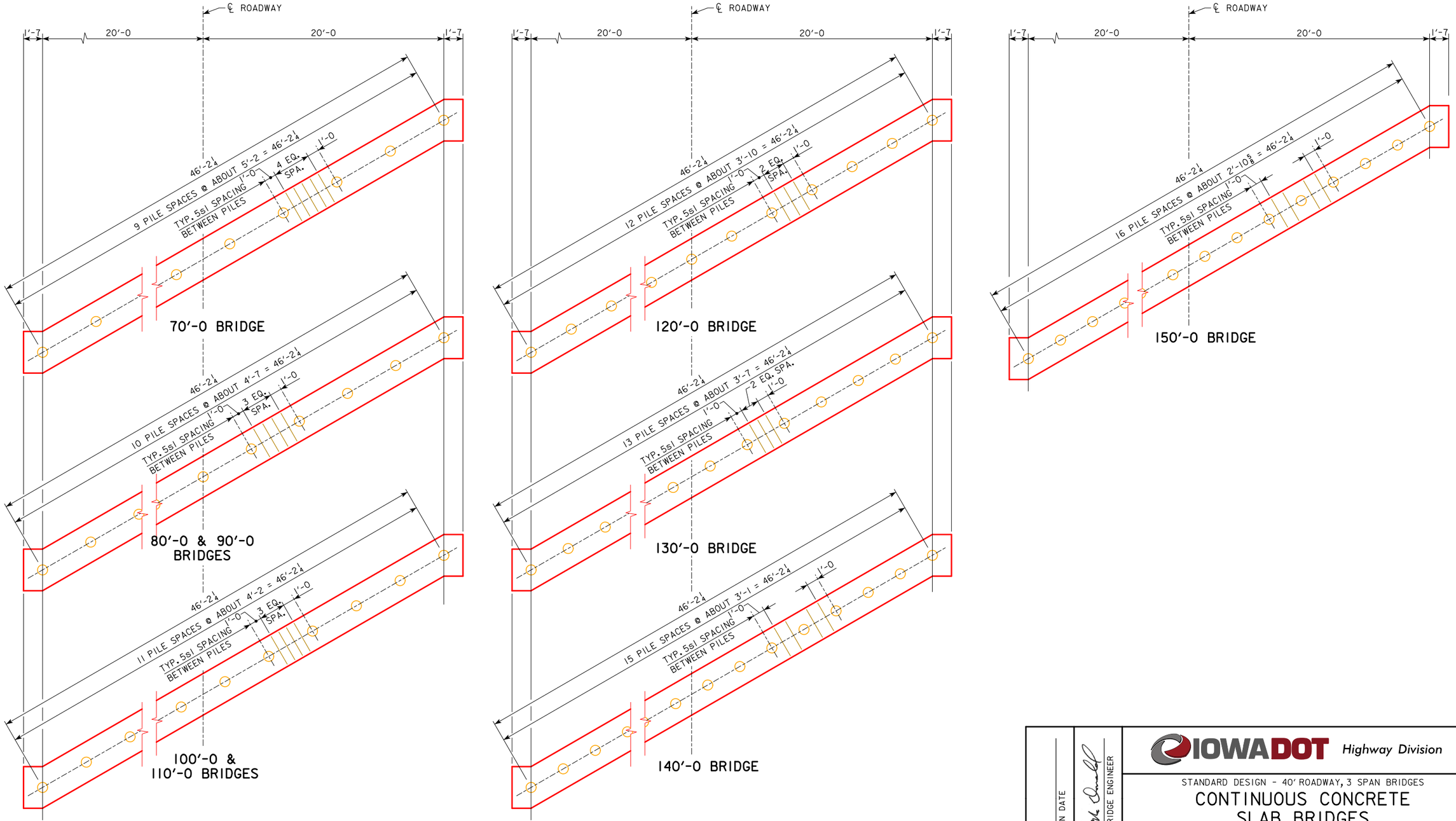

PILE PLAN - 30° SKEW
WOOD PILING

LATEST REVISION DATE

APPROVED BY BRIDGE ENGINEER

IOWA DOT Highway Division

STANDARD DESIGN - 40' ROADWAY, 3 SPAN BRIDGES

CONTINUOUS CONCRETE SLAB BRIDGES

JULY, 2014

ABUTMENT DETAILS
30° SKEW - TIMBER PILING

J40-35-14

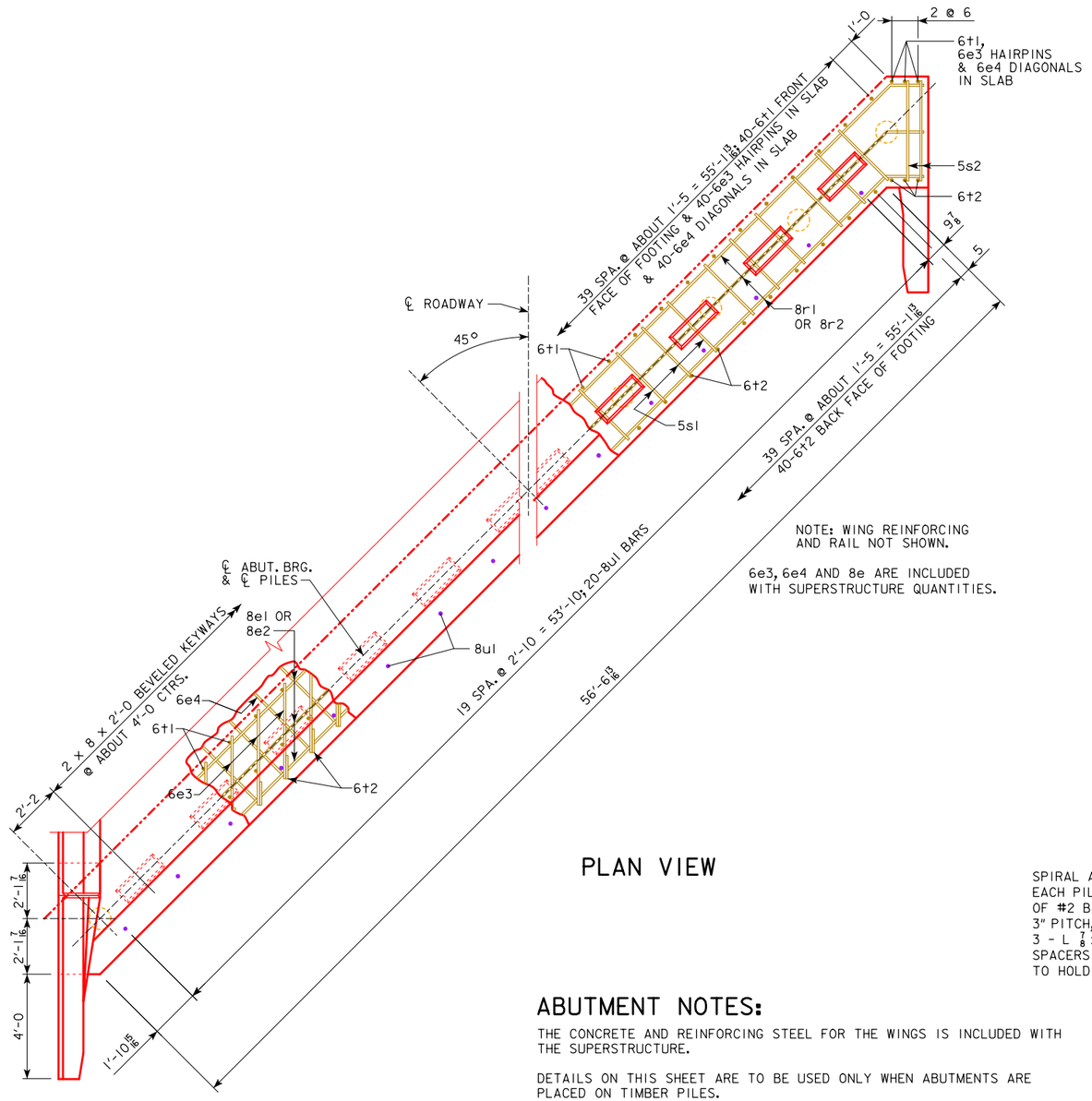

PLAN VIEW

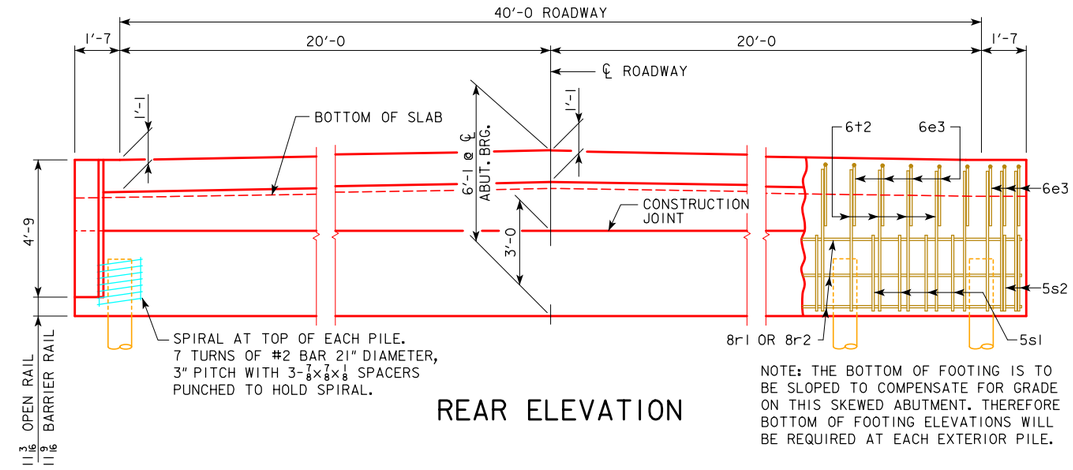

REAR ELEVATION

NOTE: THE BOTTOM OF FOOTING IS TO BE SLOPED TO COMPENSATE FOR GRADE ON THIS SKEWED ABUTMENT. THEREFORE BOTTOM OF FOOTING ELEVATIONS WILL BE REQUIRED AT EACH EXTERIOR PILE.

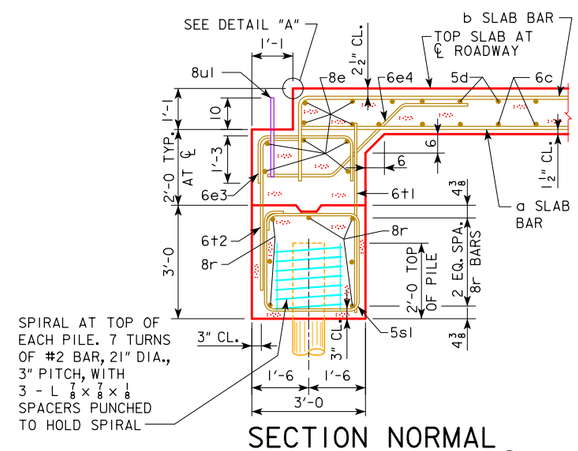

SECTION NORMAL TO ABUTMENT AT ℄

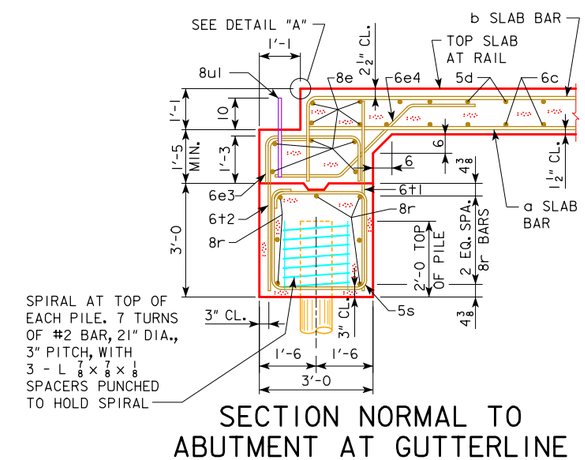

SECTION NORMAL TO ABUTMENT AT GUTTERLINE

ABUTMENT NOTES:

THE CONCRETE AND REINFORCING STEEL FOR THE WINGS IS INCLUDED WITH THE SUPERSTRUCTURE.

DETAILS ON THIS SHEET ARE TO BE USED ONLY WHEN ABUTMENTS ARE PLACED ON TIMBER PILES.

THE MINIMUM CLEAR DISTANCE FROM THE FACE OF THE CONCRETE TO NEAR REINFORCING BAR IS TO BE 2 INCHES UNLESS OTHERWISE NOTED OR SHOWN.

TIMBER PILES SHALL BE DRIVEN TO FULL PENETRATION IF PRACTICABLE BUT IN NO CASE TO A BEARING VALUE LESS THAN SHOWN IN DESIGN PLANS. TIMBER PILES SHALL NOT BE DRIVEN TO MORE THAN 160 TONS.

ALL REINFORCING STEEL IS TO BE GRADE 60.

ABUTMENT PILING WAS DESIGNED FOR HL-93 LOADING WITH AN ALLOWANCE FOR 20 LBS. PER SQ. FT. FUTURE WEARING SURFACE.

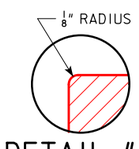

DETAIL "A"

REVISED 03-2016 - REVISION FOR ADDITION OF PAVING NOTCH BAR 8u1.

03-2016
LATEST REVISION DATE

APPROVED BY BRIDGE ENGINEER

IOWA DOT Highway Division

STANDARD DESIGN - 40' ROADWAY, 3 SPAN BRIDGES

CONTINUOUS CONCRETE SLAB BRIDGES

JULY, 2014

ABUTMENT DETAILS
45° SKEW - TIMBER PILING

J40-36-14

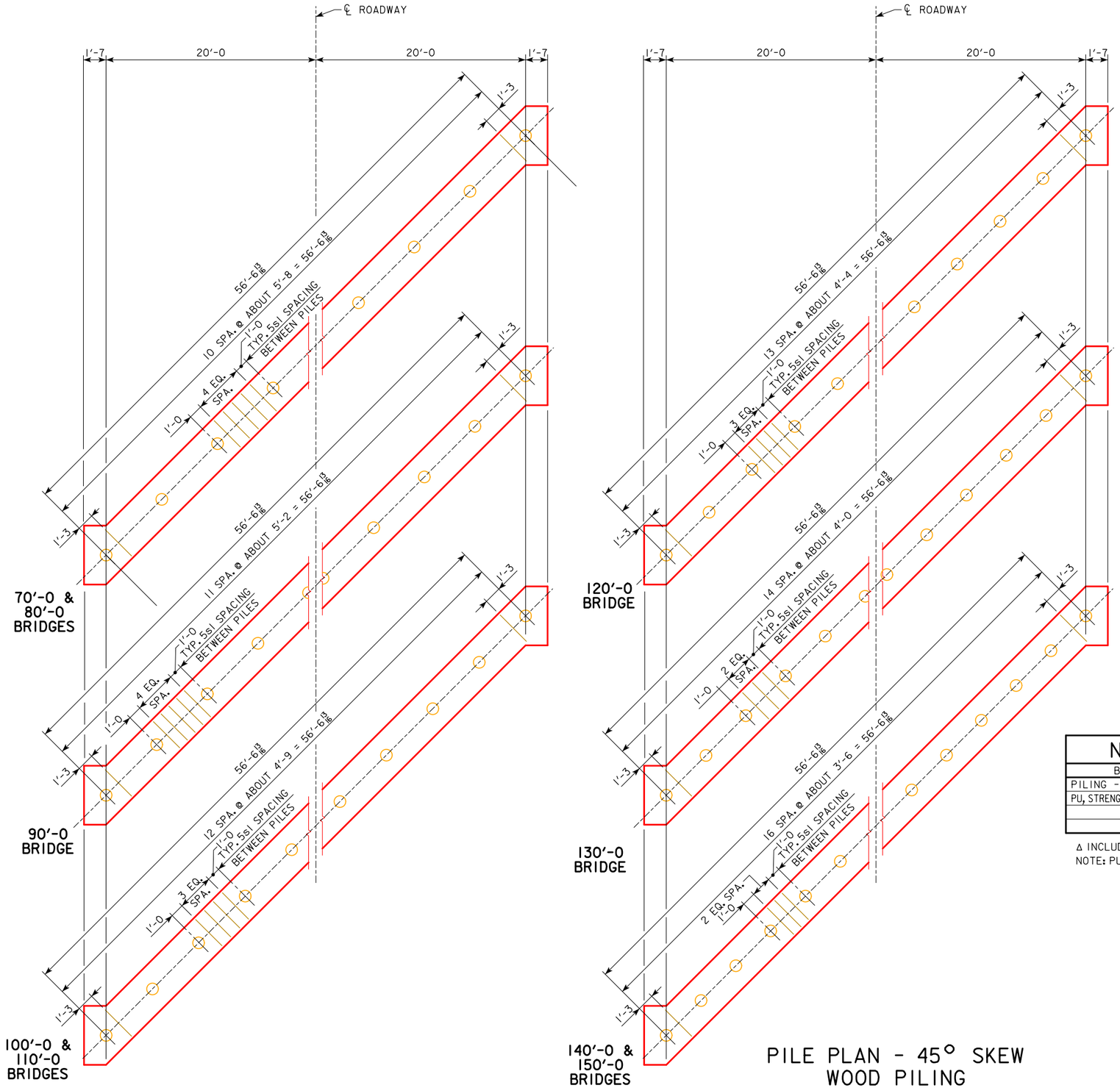

PILE PLAN - 45° SKEW
WOOD PILING

NUMBER OF PILES AND ABUTMENT DESIGN LOADS

BRIDGE LENGTH	70'-0	80'-0	90'-0	100'-0	110'-0	3120'-0	130'-0	140'-0	150'-0
PILING - NUMBER	11	11	12	13	13	14	15	17	17
PU, STRENGTH I DESIGN LOAD - KIPS	538	570	601	641	679	723	765	Δ 888	Δ 938

Δ INCLUDES DYNAMIC LOAD ALLOWANCE
NOTE: PU, STRENGTH I DESIGN LOAD (KIPS) IS NOT THE VALUE USED IN THE FIELD FOR DRIVING PILES.

LATEST REVISION DATE

APPROVED BY BRIDGE ENGINEER

IOWA DOT Highway Division

STANDARD DESIGN - 40' ROADWAY, 3 SPAN BRIDGES

CONTINUOUS CONCRETE SLAB BRIDGES

JULY, 2014

ABUTMENT DETAILS 45° SKEW - TIMBER PILING

J40-37-14

BILL OF REINFORCING STEEL - ONE ABUTMENT - 0° SKEW

	BRIDGE LENGTH			70'-0		80'-0		90'-0		100'-0		110'-0		120'-0		130'-0		140'-0		150'-0	
MARK	LOCATION	SHAPE	LENGTH	NO.	WEIGHT	NO.	WEIGHT	NO.	WEIGHT	NO.	WEIGHT	NO.	WEIGHT	NO.	WEIGHT	NO.	WEIGHT	NO.	WEIGHT	NO.	WEIGHT
8r1	ABUTMENT FOOTING LONGITUDINAL		26'-4	7	492	7	492	7	492	7	492	7	492	7	492	7	492	7	492	7	492
8r2	ABUTMENT FOOTING LONGITUDINAL		21'-4	7	399	7	399	7	399	7	399	7	399	7	399	7	399	7	399	7	399
5s1	ABUTMENT FOOTING HOOPS		11'-0	40	459	40	459	34	390	34	390	37	425	40	459	40	459	32	367	34	390
6t1	FOOTING TO SLAB BARS		5'-0	46	345	46	345	46	345	46	345	46	345	46	345	46	345	46	345	46	345
6t2	FOOTING TO SLAB BARS		5'-7	46	386	46	386	46	386	46	386	46	386	46	386	46	386	46	386	46	386
#2	PILE SPIRAL		38'-6	10	64	10	64	11	71	11	71	12	77	13	84	13	84	15	96	16	103
	SPIRAL SPACERS - L $\frac{7}{8}\times\frac{7}{8}\times\frac{1}{8}\times$ 0.70		1'-10	30	39	30	39	33	43	33	43	36	47	39	50	39	50	45	58	48	62
REINFORCING STEEL EPOXY COATED - TOTAL (LBS.)					2184		2184		2126		2126		2171		2215		2215		2143		2177

BILL OF REINFORCING STEEL - ONE ABUTMENT - 15° SKEW

	BRIDGE LENGTH			70'-0		80'-0		90'-0		100'-0		110'-0		120'-0		130'-0		140'-0		150'-0	
MARK	LOCATION	SHAPE	LENGTH	NO.	WEIGHT	NO.	WEIGHT	NO.	WEIGHT	NO.	WEIGHT	NO.	WEIGHT	NO.	WEIGHT	NO.	WEIGHT	NO.	WEIGHT	NO.	WEIGHT
8r1	ABUTMENT FOOTING LONGITUDINAL		27'-2	7	508	7	508	7	508	7	508	7	508	7	508	7	508	7	508	7	508
8r2	ABUTMENT FOOTING LONGITUDINAL		22'-1	7	413	7	413	7	413	7	413	7	413	7	413	7	413	7	413	7	413
5s1	ABUTMENT FOOTING HOOPS		11'-0	36	413	36	413	40	459	40	459	33	379	36	413	36	413	28	321	30	344
5s2	ABUTMENT FOOTING HOOPS		11'-3	4	47	4	47	4	47	4	47	4	47	4	47	4	47	4	47	4	47
6t1	FOOTING TO SLAB BARS		5'-0	46	345	46	345	46	345	46	345	46	345	46	345	46	345	46	345	46	345
6t2	FOOTING TO SLAB BARS		5'-7	46	386	46	386	46	386	46	386	46	386	46	386	46	386	46	386	46	386
#2	PILE SPIRAL		38'-6	10	64	10	64	11	71	11	71	12	77	13	84	13	84	15	96	16	103
	SPIRAL SPACERS - L $\frac{7}{8}\times\frac{7}{8}\times\frac{1}{8}\times$ 0.70		1'-10	30	39	30	39	33	43	33	43	36	47	39	50	39	50	45	58	48	62
REINFORCING STEEL EPOXY COATED - TOTAL (LBS.)					2215		2215		2272		2272		2202		2246		2246		2174		2208

BILL OF REINFORCING STEEL - ONE ABUTMENT - 30° SKEW

	BRIDGE LENGTH			70'-0		80'-0		90'-0		100'-0		110'-0		120'-0		130'-0		140'-0		150'-0	
MARK	LOCATION	SHAPE	LENGTH	NO.	WEIGHT	NO.	WEIGHT	NO.	WEIGHT	NO.	WEIGHT	NO.	WEIGHT	NO.	WEIGHT	NO.	WEIGHT	NO.	WEIGHT	NO.	WEIGHT
8r1	ABUTMENT FOOTING LONGITUDINAL		29'-6	7	551	7	551	7	551	7	551	7	551	7	551	7	551	7	551	7	551
8r2	ABUTMENT FOOTING LONGITUDINAL		24'-5	7	456	7	456	7	456	7	456	7	456	7	456	7	456	7	456	7	456
5s1	ABUTMENT FOOTING HOOPS		11'-0	45	516	40	459	40	459	44	505	44	505	36	413	39	447	30	344	32	367
5s2	ABUTMENT FOOTING HOOPS		11'-11	4	50	4	50	4	50	4	50	4	50	4	50	4	50	4	50	4	50
6t1	FOOTING TO SLAB BARS		5'-0	46	345	46	345	46	345	46	345	46	345	46	345	46	345	46	345	46	345
6t2	FOOTING TO SLAB BARS		5'-7	46	386	46	386	46	386	46	386	46	386	46	386	46	386	46	386	46	386
#2	PILE SPIRAL		38'-6	10	64	11	71	11	71	12	77	12	77	13	84	14	90	16	103	17	109
	SPIRAL SPACERS - L $\frac{7}{8}\times\frac{7}{8}\times\frac{1}{8}\times$ 0.70		1'-10	30	39	33	43	33	43	36	47	36	47	39	50	42	54	48	62	51	66
REINFORCING STEEL EPOXY COATED - TOTAL (LBS.)					2407		2361		2361		2417		2417		2335		2379		2297		2330

BILL OF REINFORCING STEEL - ONE ABUTMENT - 45° SKEW

	BRIDGE LENGTH			70'-0		80'-0		90'-0		100'-0		110'-0		120'-0		130'-0		140'-0		150'-0	
MARK	LOCATION	SHAPE	LENGTH	NO.	WEIGHT	NO.	WEIGHT	NO.	WEIGHT	NO.	WEIGHT	NO.	WEIGHT	NO.	WEIGHT	NO.	WEIGHT	NO.	WEIGHT	NO.	WEIGHT
8r1	ABUTMENT FOOTING LONGITUDINAL		34'-8	7	648	7	648	7	648	7	648	7	648	7	648	7	648	7	648	7	648
8r2	ABUTMENT FOOTING LONGITUDINAL		29'-7	7	553	7	553	7	553	7	553	7	553	7	553	7	553	7	553	7	553
5s1	ABUTMENT FOOTING HOOPS		11'-0	50	574	50	574	55	631	48	551	48	551	52	597	42	482	48	551	48	551
5s2	ABUTMENT FOOTING HOOPS		13'-6	4	56	4	56	4	56	4	56	4	56	4	56	4	56	4	56	4	56
6t1	FOOTING TO SLAB BARS		5'-0	46	345	46	345	46	345	46	345	46	345	46	345	46	345	46	345	46	345
6t2	FOOTING TO SLAB BARS		5'-7	46	386	46	386	46	386	46	386	46	386	46	386	46	386	46	386	46	386
#2	PILE SPIRAL		38'-6	11	71	11	71	12	77	13	84	13	84	14	90	15	96	17	109	17	109
	SPIRAL SPACERS - L $\frac{7}{8}\times\frac{7}{8}\times\frac{1}{8}\times$ 0.70		1'-10	33	43	33	43	36	47	39	50	39	50	42	54	45	58	51	66	51	66
REINFORCING STEEL EPOXY COATED - TOTAL (LBS.)					2676		2676		2743		2673		2673		2729		2624		2714		2714

NOTE: THE PILE SPIRALS AND SPIRAL SPACERS ARE TO BE NON-COATED REINFORCING BUT MAY BE EPOXY COATED AT THE CONTRACTORS OPTION AND EXPENSE.

ESTIMATED QUANTITIES - ONE ABUT. - 0° SKEW

LOCATION	UNIT	QUANTITY								
BRIDGE LENGTH		70'-0	80'-0	90'-0	100'-0	110'-0	120'-0	130'-0	140'-0	150'-0
STRUCTURAL CONCRETE (BRIDGE)	C.Y.	13.8	13.8	13.8	13.8	13.7	13.6	13.6	13.5	13.5
REINFORCING STEEL EPOXY COATED	LBS.	2184	2184	2126	2126	2171	2215	2215	2143	2177
WOOD PILES (TREATED)	NO.	10	10	11	11	12	13	13	15	16
PREBORE HOLES	FT.	-	-	-	-	-	-	-	150	160

ESTIMATED QUANTITIES - ONE ABUT. - 15° SKEW

LOCATION	UNIT	QUANTITY								
BRIDGE LENGTH		70'-0	80'-0	90'-0	100'-0	110'-0	120'-0	130'-0	140'-0	150'-0
STRUCTURAL CONCRETE (BRIDGE)	C.Y.	14.3	14.3	14.3	14.3	14.2	14.1	14.1	14.0	14.0
REINFORCING STEEL EPOXY COATED	LBS.	2215	2215	2272	2272	2202	2246	2246	2174	2208
WOOD PILES (TREATED)	NO.	10	10	11	11	12	13	13	15	16
PREBORE HOLES	FT.	-	-	-	-	-	-	-	150	160

ESTIMATED QUANTITIES - ONE ABUT. - 30° SKEW

LOCATION	UNIT	QUANTITY								
BRIDGE LENGTH		70'-0	80'-0	90'-0	100'-0	110'-0	120'-0	130'-0	140'-0	150'-0
STRUCTURAL CONCRETE (BRIDGE)	C.Y.	16.0	16.0	16.0	15.9	15.9	15.8	15.8	15.7	15.6
REINFORCING STEEL EPOXY COATED	LBS.	2407	2361	2361	2417	2417	2335	2379	2297	2330
WOOD PILES (TREATED)	NO.	10	11	11	12	12	13	14	16	17
PREBORE HOLES	FT.	-	-	-	-	-	-	-	160	170

ESTIMATED QUANTITIES - ONE ABUT. - 45° SKEW

LOCATION	UNIT	QUANTITY								
BRIDGE LENGTH		70'-0	80'-0	90'-0	100'-0	110'-0	120'-0	130'-0	140'-0	150'-0
STRUCTURAL CONCRETE (BRIDGE)	C.Y.	19.7	19.7	19.7	19.6	19.6	19.6	19.5	19.4	19.4
REINFORCING STEEL EPOXY COATED	LBS.	2676	2676	2743	2673	2673	2729	2624	2714	2714
WOOD PILES (TREATED)	NO.	11	11	12	13	13	14	15	17	17
PREBORE HOLES	FT.	-	-	-	-	-	-	-	170	170

BENT BAR DETAILS

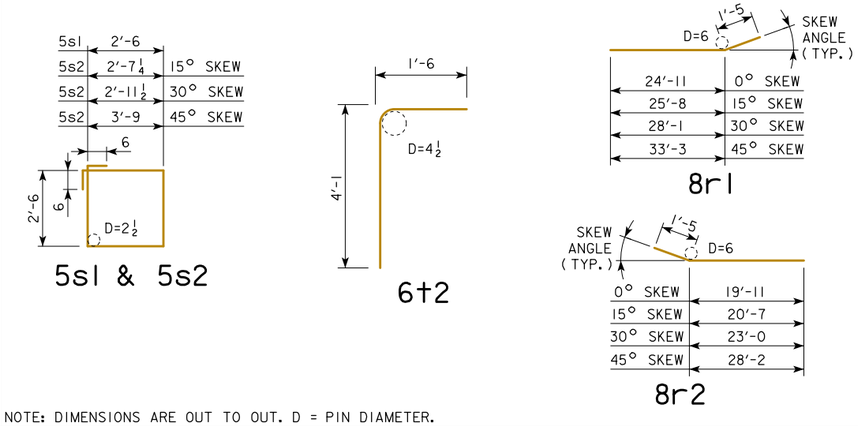

NOTE: DIMENSIONS ARE OUT TO OUT. D = PIN DIAMETER.

LATEST REVISION DATE

APPROVED BY BRIDGE ENGINEER

IOWA DOT Highway Division

STANDARD DESIGN - 40' ROADWAY, 3 SPAN BRIDGES

CONTINUOUS CONCRETE SLAB BRIDGES

JULY, 2014

ABUTMENT DETAILS
TIMBER PILING

J40-38-14

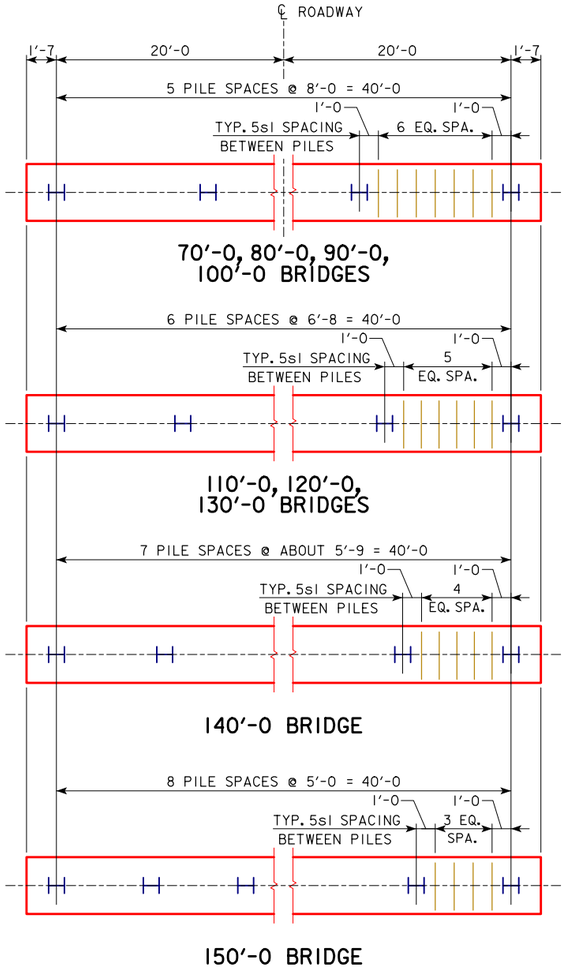

PILE PLAN - 0° SKEW STEEL PILING

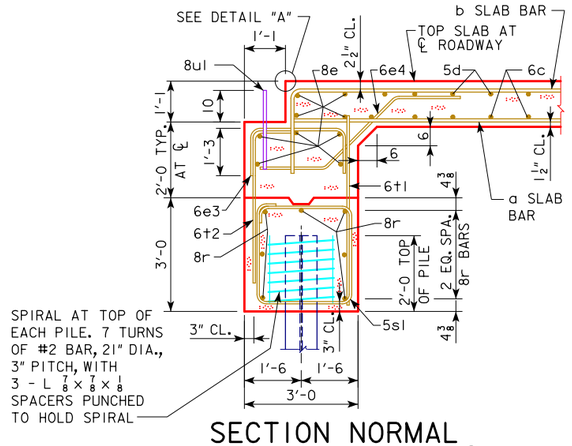

SECTION NORMAL TO ABUTMENT AT ℄

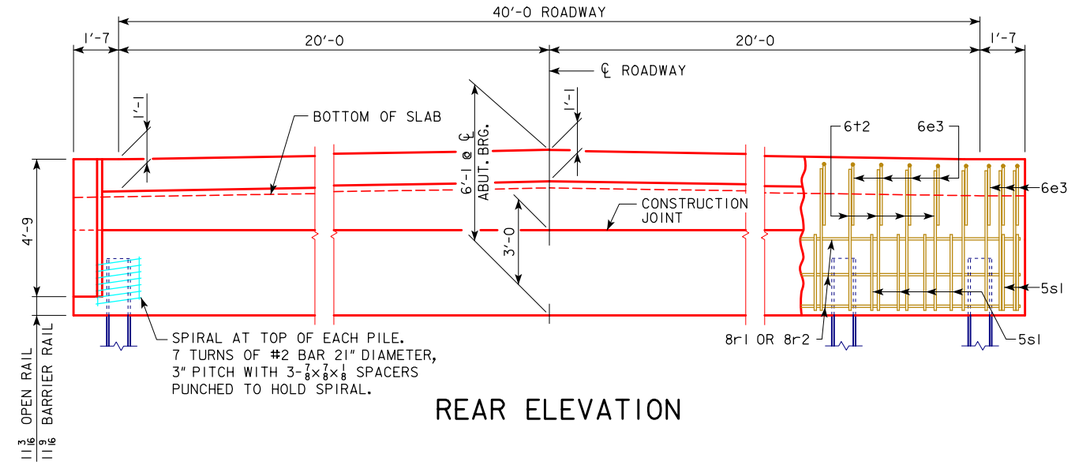

REAR ELEVATION

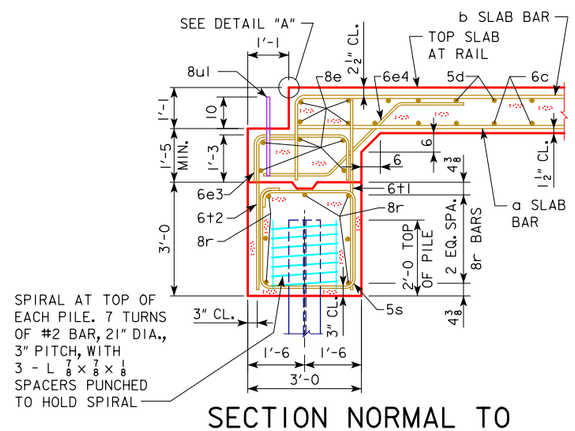

SECTION NORMAL TO ABUTMENT AT GUTTERLINE

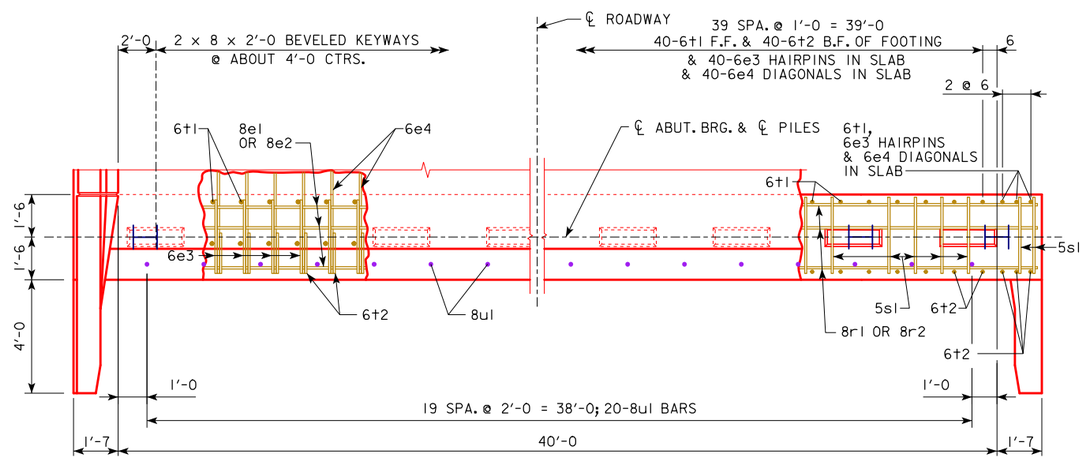

PLAN VIEW

NOTE: WING REINFORCING AND RAIL NOT SHOWN.

6e3, 6e4, AND 8e ARE INCLUDED WITH SUPERSTRUCTURE QUANTITIES.

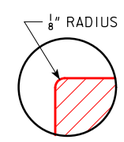

DETAIL "A"

ABUTMENT NOTES:

ALL PILING ARE HP 10x42.

THE CONCRETE AND REINFORCING STEEL FOR THE WINGS IS INCLUDED WITH THE SUPERSTRUCTURE.

DETAILS ON THIS SHEET ARE TO BE USED ONLY WHEN ABUTMENTS ARE PLACED ON STEEL PILES. IF ROCK IS ENCOUNTERED CLOSER THAN 12'-0 BELOW ABUTMENT FOOTING, SPECIAL ANALYSIS MAY BE REQUIRED.

THE MINIMUM CLEAR DISTANCE FROM THE FACE OF THE CONCRETE TO NEAR REINFORCING BAR IS TO BE 2 INCHES UNLESS OTHERWISE NOTED OR SHOWN.

STEEL ABUTMENT PILES SHALL BE DRIVEN TO FULL PENETRATION IF PRACTICABLE BUT IN NO CASE TO A BEARING VALUE LESS THAN SHOWN IN DESIGN PLANS.

ALL REINFORCING STEEL IS TO BE GRADE 60.

ABUTMENT PILING WAS DESIGNED FOR HL-93 LOADING WITH AN ALLOWANCE FOR 20 LBS. PER SQ. FT. FUTURE WEARING SURFACE.

NUMBER OF PILES AND ABUTMENT DESIGN LOADS

BRIDGE LENGTH	70'-0	80'-0	90'-0	100'-0	110'-0	120'-0	130'-0	140'-0	150'-0
PILING - NUMBER	6	6	6	6	7	7	7	8	9
PU, STRENGTH I DESIGN LOAD - KIPS	483	515	546	585	623	666	708	Δ 830	Δ 879

Δ INCLUDES DYNAMIC LOAD ALLOWANCE

NOTE: PU, STRENGTH I DESIGN LOAD (KIPS) IS NOT THE VALUE USED IN THE FIELD FOR DRIVING PILES.

03-2016
LATEST REVISION DATE

APPROVED BY BRIDGE ENGINEER

IOWA DOT Highway Division

STANDARD DESIGN - 40' ROADWAY, 3 SPAN BRIDGES

CONTINUOUS CONCRETE SLAB BRIDGES

JULY, 2014

ABUTMENT DETAILS
0° SKEW - STEEL PILING

J40-39-14

REVISED 03-2016 - REVISION FOR ADDITION OF PAVING NOTCH BAR 8u1.

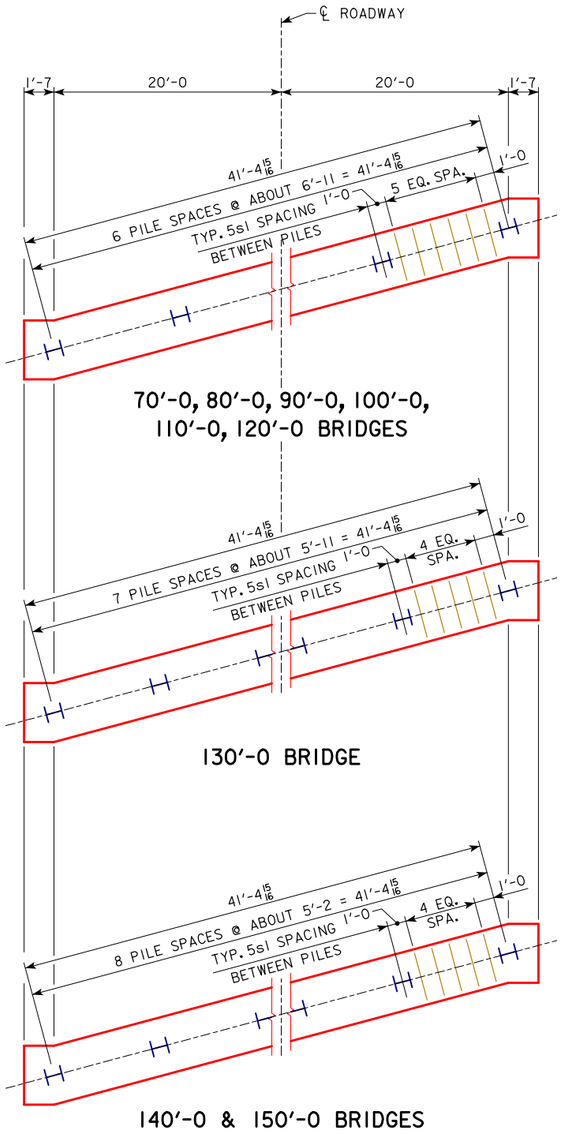

PILE PLAN - 15° SKEW
STEEL PILING

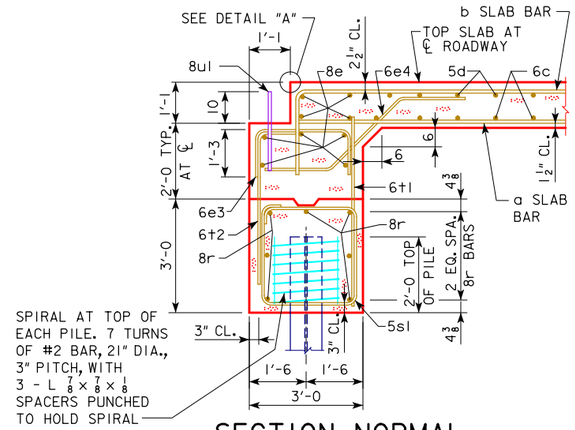

SECTION NORMAL
TO ABUTMENT AT ℄

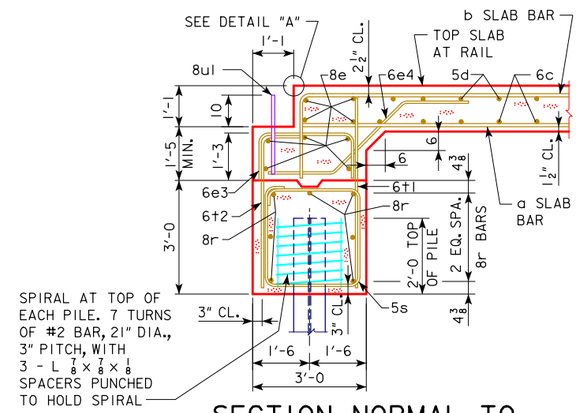

SECTION NORMAL TO
ABUTMENT AT GUTTERLINE

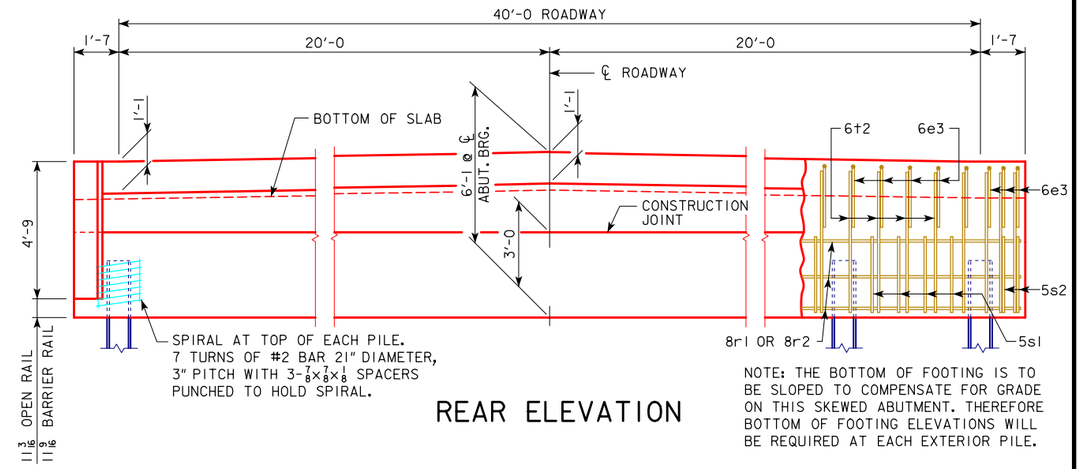

REAR ELEVATION

NOTE: THE BOTTOM OF FOOTING IS TO BE SLOPED TO COMPENSATE FOR GRADE ON THIS SKEWED ABUTMENT. THEREFORE BOTTOM OF FOOTING ELEVATIONS WILL BE REQUIRED AT EACH EXTERIOR PILE.

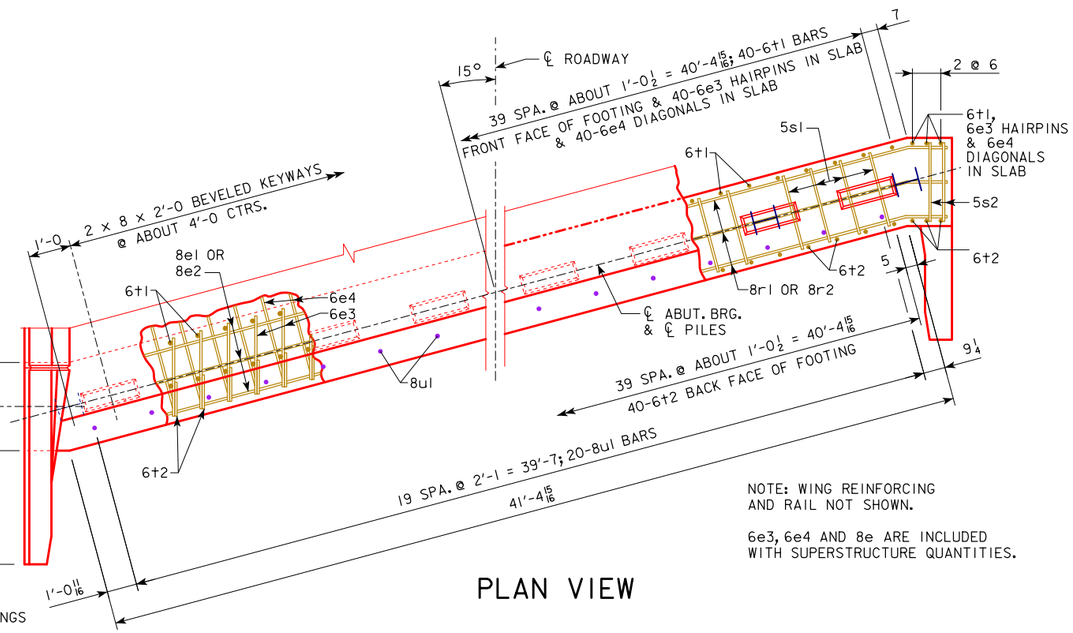

PLAN VIEW

NOTE: WING REINFORCING AND RAIL NOT SHOWN.

6e3, 6e4 AND 8e ARE INCLUDED WITH SUPERSTRUCTURE QUANTITIES.

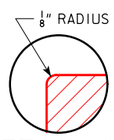

DETAIL "A"

ABUTMENT NOTES:

ALL PILING ARE HP 10×42.

THE CONCRETE AND REINFORCING STEEL FOR THE WINGS IS INCLUDED WITH THE SUPERSTRUCTURE.

DETAILS ON THIS SHEET ARE TO BE USED ONLY WHEN ABUTMENTS ARE PLACED ON STEEL PILES. IF ROCK IS ENCOUNTERED CLOSER THAN 12'-0 BELOW ABUTMENT FOOTING, SPECIAL ANALYSIS MAY BE REQUIRED.

THE MINIMUM CLEAR DISTANCE FROM THE FACE OF THE CONCRETE TO NEAR REINFORCING BAR IS TO BE 2 INCHES UNLESS OTHERWISE NOTED OR SHOWN.

STEEL ABUTMENT PILES SHALL BE DRIVEN TO FULL PENETRATION IF PRACTICABLE BUT IN NO CASE TO A BEARING VALUE LESS THAN SHOWN IN DESIGN PLANS.

ALL REINFORCING STEEL IS TO BE GRADE 60.

ABUTMENT PILING WAS DESIGNED FOR HL-93 LOADING WITH AN ALLOWANCE FOR 20 LBS. PER SQ.FT. FUTURE WEARING SURFACE.

NUMBER OF PILES AND ABUTMENT DESIGN LOADS

BRIDGE LENGTH	70'-0	80'-0	90'-0	100'-0	110'-0	120'-0	130'-0	140'-0	150'-0
PILING - NUMBER	7	7	7	7	7	7	8	9	9
PU, STRENGTH I DESIGN LOAD - KIPS	488	520	550	590	627	671	713	Δ 835	Δ 884

Δ INCLUDES DYNAMIC LOAD ALLOWANCE
NOTE: PU, STRENGTH I DESIGN LOAD (KIPS) IS NOT THE VALUE USED IN THE FIELD FOR DRIVING PILES.

03-2016
LATEST REVISION DATE

APPROVED BY BRIDGE ENGINEER

IOWA DOT Highway Division

STANDARD DESIGN - 40' ROADWAY, 3 SPAN BRIDGES
CONTINUOUS CONCRETE SLAB BRIDGES
JULY, 2014

ABUTMENT DETAILS
15° SKEW - STEEL PILING

J40-40-14

REVISED 03-2016 - REVISION FOR ADDITION OF PAVING NOTCH BAR 8u1.

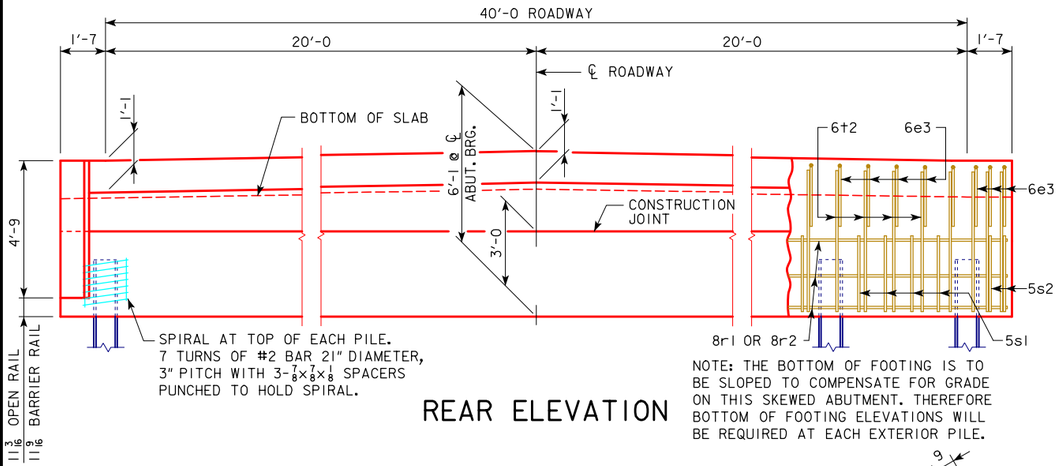

NOTE: THE BOTTOM OF FOOTING IS TO BE SLOPED TO COMPENSATE FOR GRADE ON THIS SKEWED ABUTMENT. THEREFORE BOTTOM OF FOOTING ELEVATIONS WILL BE REQUIRED AT EACH EXTERIOR PILE.

REAR ELEVATION

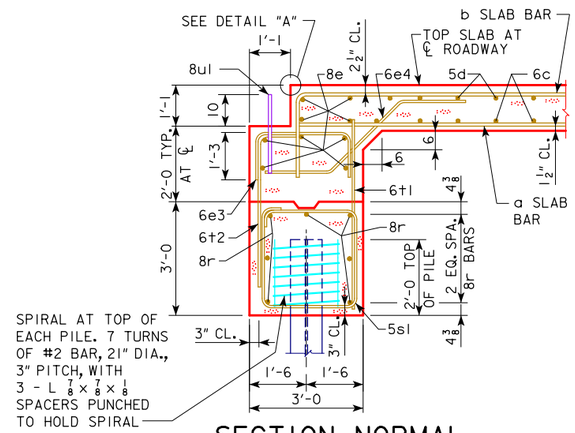

SECTION NORMAL TO ABUTMENT AT ℄

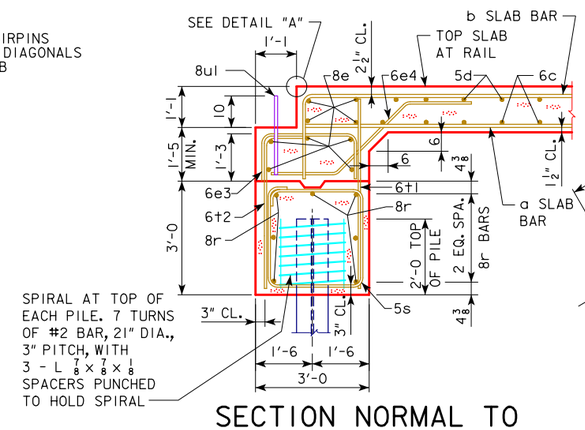

SECTION NORMAL TO ABUTMENT AT GUTTERLINE

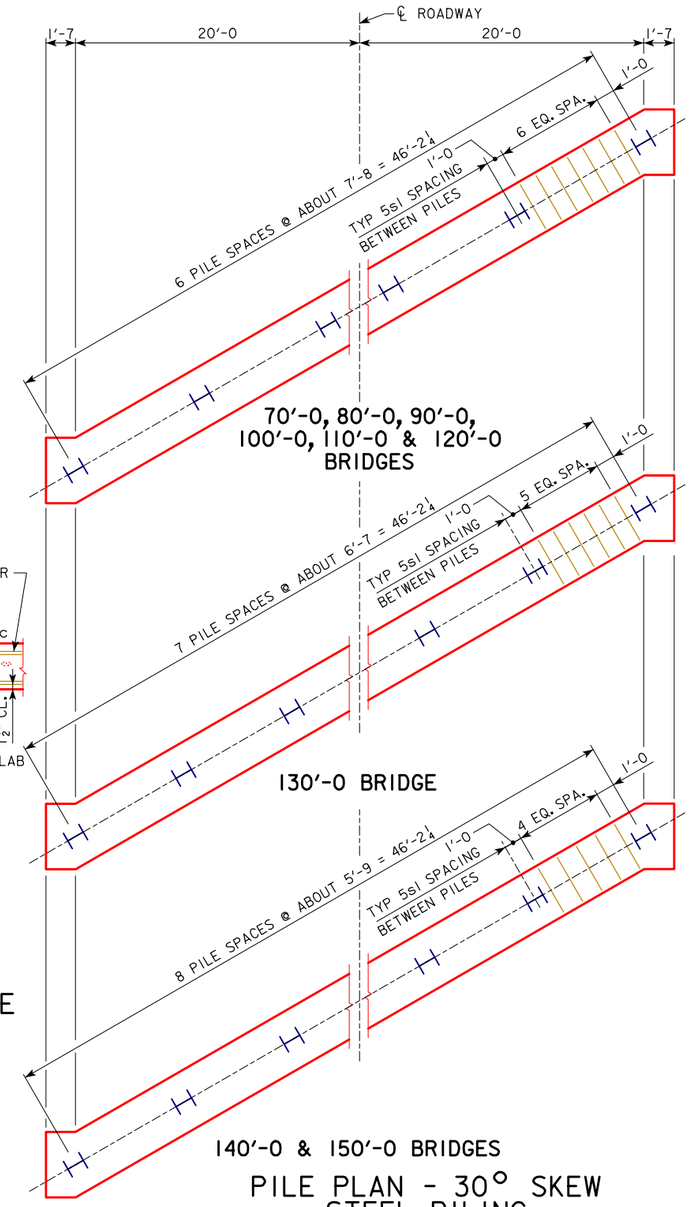

PILE PLAN - 30° SKEW STEEL PILING

DETAIL "A"

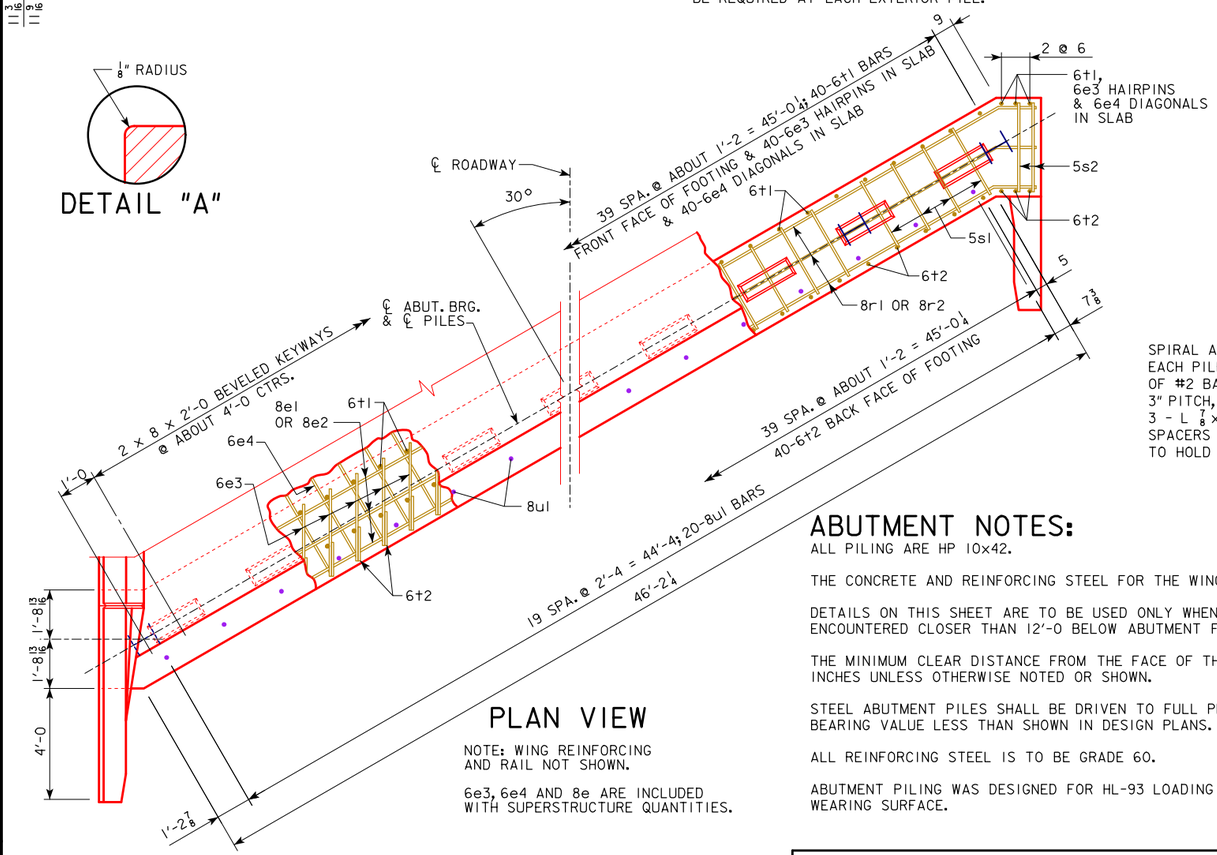

PLAN VIEW

NOTE: WING REINFORCING AND RAIL NOT SHOWN.

6e3, 6e4 AND 8e ARE INCLUDED WITH SUPERSTRUCTURE QUANTITIES.

ABUTMENT NOTES:

ALL PILING ARE HP 10x42.

THE CONCRETE AND REINFORCING STEEL FOR THE WINGS IS INCLUDED WITH THE SUPERSTRUCTURE.

DETAILS ON THIS SHEET ARE TO BE USED ONLY WHEN ABUTMENTS ARE PLACED ON STEEL PILES. IF ROCK IS ENCOUNTERED CLOSER THAN 12'-0 BELOW ABUTMENT FOOTING, SPECIAL ANALYSIS MAY BE REQUIRED.

THE MINIMUM CLEAR DISTANCE FROM THE FACE OF THE CONCRETE TO NEAR REINFORCING BAR IS TO BE 2 INCHES UNLESS OTHERWISE NOTED OR SHOWN.

STEEL ABUTMENT PILES SHALL BE DRIVEN TO FULL PENETRATION IF PRACTICABLE BUT IN NO CASE TO A BEARING VALUE LESS THAN SHOWN IN DESIGN PLANS.

ALL REINFORCING STEEL IS TO BE GRADE 60.

ABUTMENT PILING WAS DESIGNED FOR HL-93 LOADING WITH AN ALLOWANCE FOR 20 LBS. PER SQ. FT. FUTURE WEARING SURFACE.

NUMBER OF PILES AND ABUTMENT DESIGN LOADS

BRIDGE LENGTH	70'-0	80'-0	90'-0	100'-0	110'-0	120'-0	130'-0	140'-0	150'-0
PILING - NUMBER	7	7	7	7	7	7	8	9	9
PU, STRENGTH I DESIGN LOAD - KIPS	503	536	566	606	644	687	729	Δ 852	Δ 901

Δ INCLUDES DYNAMIC LOAD ALLOWANCE

NOTE: PU, STRENGTH I DESIGN LOAD (KIPS) IS NOT THE VALUE USED IN THE FIELD FOR DRIVING PILES.

03-2016
LATEST REVISION DATE

APPROVED BY BRIDGE ENGINEER

IOWA DOT Highway Division

STANDARD DESIGN - 40' ROADWAY, 3 SPAN BRIDGES

CONTINUOUS CONCRETE SLAB BRIDGES

JULY, 2014

ABUTMENT DETAILS
30° SKEW - STEEL PILING

J40-41-14

REVISED 03-2016 - REVISION FOR ADDITION OF PAVING NOTCH BAR 8u1.

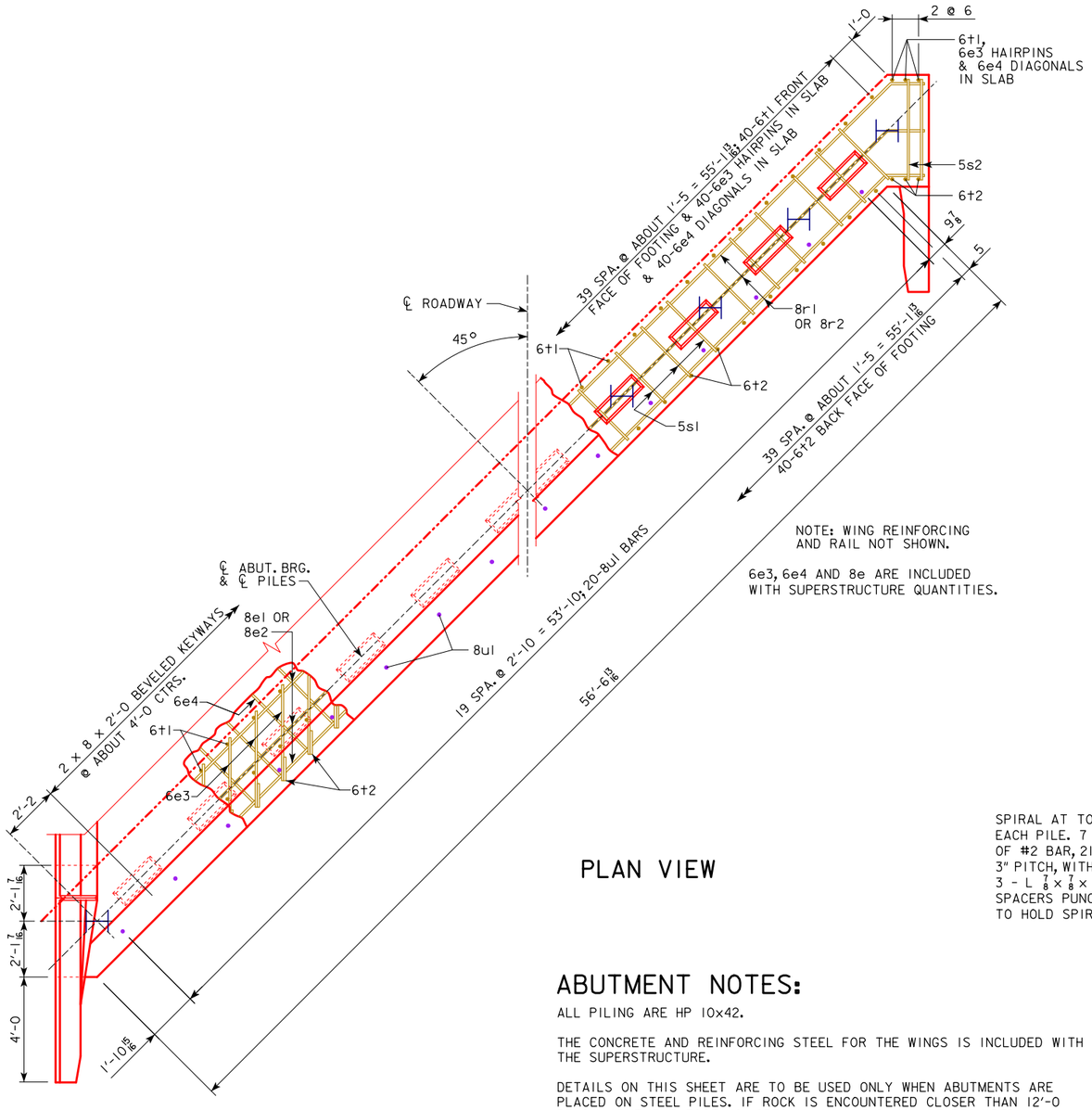

PLAN VIEW

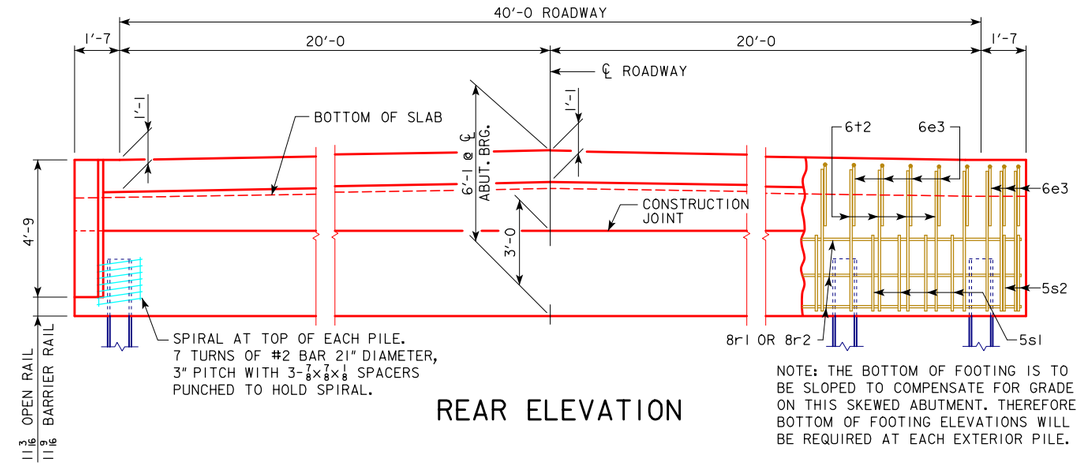

REAR ELEVATION

NOTE: THE BOTTOM OF FOOTING IS TO BE SLOPED TO COMPENSATE FOR GRADE ON THIS SKEWED ABUTMENT. THEREFORE BOTTOM OF FOOTING ELEVATIONS WILL BE REQUIRED AT EACH EXTERIOR PILE.

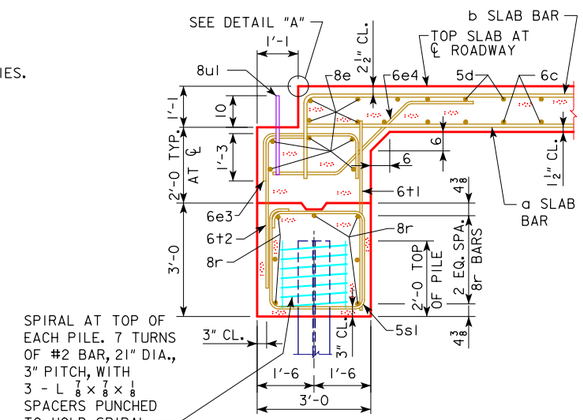

SECTION NORMAL TO ABUTMENT AT ℄

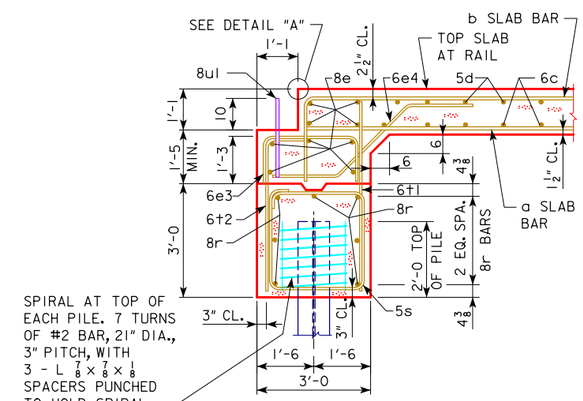

SECTION NORMAL TO ABUTMENT AT GUTTERLINE

ABUTMENT NOTES:

ALL PILING ARE HP 10x42.

THE CONCRETE AND REINFORCING STEEL FOR THE WINGS IS INCLUDED WITH THE SUPERSTRUCTURE.

DETAILS ON THIS SHEET ARE TO BE USED ONLY WHEN ABUTMENTS ARE PLACED ON STEEL PILES. IF ROCK IS ENCOUNTERED CLOSER THAN 12'-0 BELOW ABUTMENT FOOTING, SPECIAL ANALYSIS MAY BE REQUIRED.

THE MINIMUM CLEAR DISTANCE FROM THE FACE OF THE CONCRETE TO NEAR REINFORCING BAR IS TO BE 2 INCHES UNLESS OTHERWISE NOTED OR SHOWN.

STEEL ABUTMENT PILES SHALL BE DRIVEN TO FULL PENETRATION IF PRACTICABLE BUT IN NO CASE TO A BEARING VALUE LESS THAN SHOWN IN DESIGN PLANS.

ALL REINFORCING STEEL IS TO BE GRADE 60.

ABUTMENT PILING WAS DESIGNED FOR HL-93 LOADING WITH AN ALLOWANCE FOR 20 LBS. PER SQ. FT. FUTURE WEARING SURFACE.

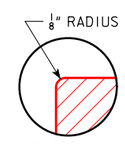

DETAIL "A"

03-2016
LATEST REVISION DATE

APPROVED BY BRIDGE ENGINEER

IOWA DOT Highway Division

STANDARD DESIGN - 40' ROADWAY, 3 SPAN BRIDGES

CONTINUOUS CONCRETE SLAB BRIDGES

JULY, 2014

ABUTMENT DETAILS
45° SKEW - STEEL PILING

J40-42-14

REVISED 03-2016 - REVISION FOR ADDITION OF PAVING NOTCH BAR 8u1.

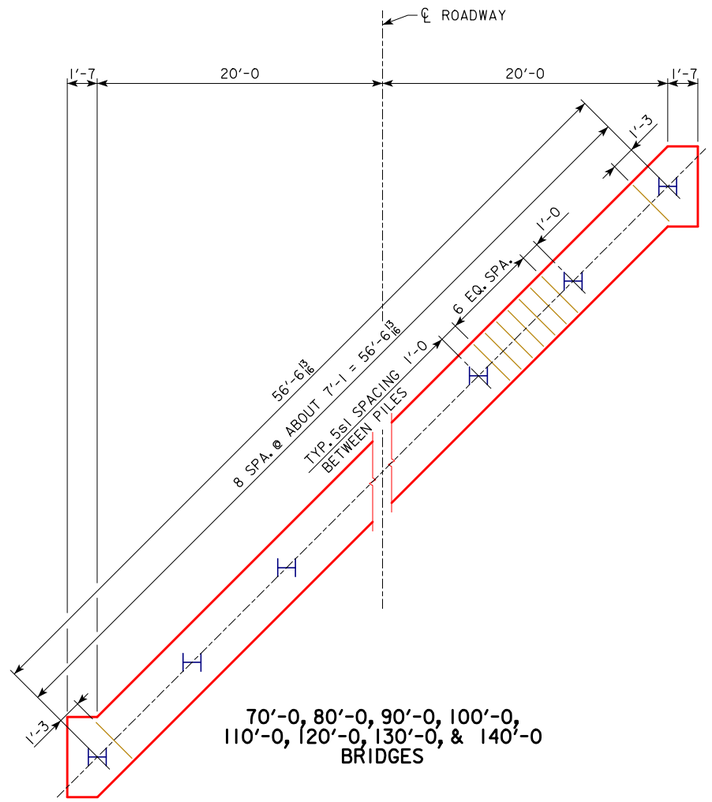

70'-0, 80'-0, 90'-0, 100'-0,
110'-0, 120'-0, 130'-0, & 140'-0
BRIDGES

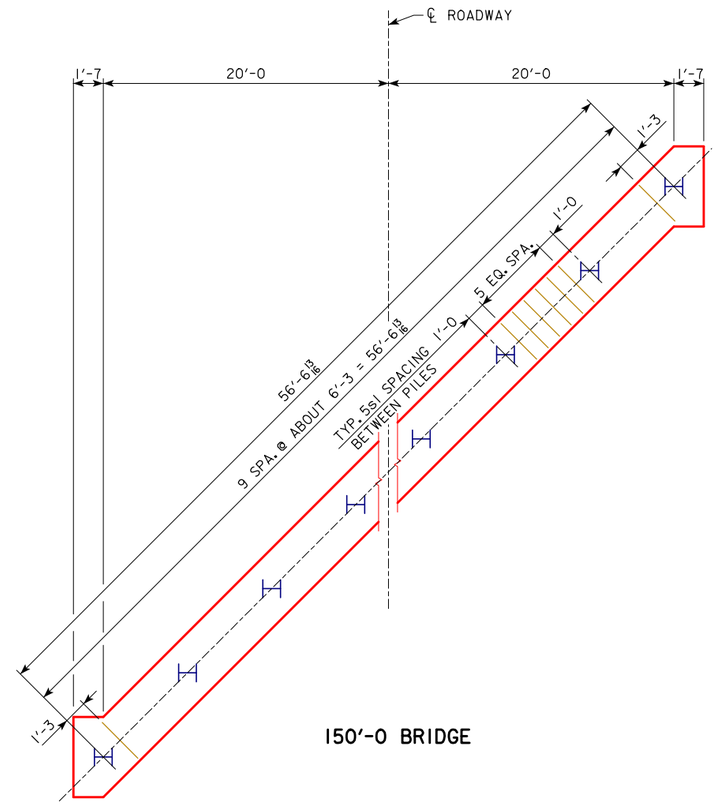

150'-0 BRIDGE

PILE PLAN - 45° SKEW STEEL PILING

NOTE:
ALL PILES ARE TO BE ORIENTED WITH WEBS PERPENDICULAR
TO THE ℄ OF THE ROADWAY AS SHOWN.

NUMBER OF PILES AND ABUTMENT DESIGN LOADS

BRIDGE LENGTH	70'-0	80'-0	90'-0	100'-0	110'-0	120'-0	130'-0	140'-0	150'-0
PILING - NUMBER	9	9	9	9	9	9	9	9	10
PU, STRENGTH I DESIGN LOAD - KIPS	538	570	601	641	679	723	765	Δ 888	Δ 938

Δ INCLUDES DYNAMIC LOAD ALLOWANCE
NOTE: PU, STRENGTH I DESIGN LOAD (KIPS) IS NOT THE VALUE USED IN THE FIELD FOR DRIVING PILES.

LATEST REVISION DATE

APPROVED BY BRIDGE ENGINEER

IOWA DOT Highway Division

STANDARD DESIGN - 40' ROADWAY, 3 SPAN BRIDGES
CONTINUOUS CONCRETE
SLAB BRIDGES
JULY, 2014

ABUTMENT DETAILS
45° SKEW - STEEL PILING

J40-43-14

BILL OF REINFORCING STEEL - ONE ABUTMENT - 0° SKEW

	BRIDGE LENGTH			70'-0		80'-0		90'-0		100'-0		110'-0		120'-0		130'-0		140'-0		150'-0	
MARK	LOCATION	SHAPE	LENGTH	NO.	WEIGHT	NO.	WEIGHT	NO.	WEIGHT	NO.	WEIGHT	NO.	WEIGHT	NO.	WEIGHT	NO.	WEIGHT	NO.	WEIGHT	NO.	WEIGHT
8r1	ABUTMENT FOOTING LONGITUDINAL		26'-4	7	492	7	492	7	492	7	492	7	492	7	492	7	492	7	492	7	492
8r2	ABUTMENT FOOTING LONGITUDINAL		21'-4	7	399	7	399	7	399	7	399	7	399	7	399	7	399	7	399	7	399
	ABUTMENT FOOTING HOOPS																				
5s1			11'-0	39	447	39	447	39	447	39	447	40	459	40	459	40	459	39	447	36	413
	FOOTING TO SLAB BARS																				
6t1	FOOTING TO SLAB BARS		5'-0	46	345	46	345	46	345	46	345	46	345	46	345	46	345	46	345	46	345
6t2			5'-7	46	386	46	386	46	386	46	386	46	386	46	386	46	386	46	386	46	386
	PILE SPIRAL																				
#2	SPIRAL SPACERS - L $\frac{7}{8}\times\frac{7}{8}\times\frac{1}{8}\times$ 0.70		38'-6	6	39	6	39	6	39	6	39	7	45	7	45	7	45	8	51	9	58
			1'-10	18	24	18	24	18	24	18	24	21	27	21	27	21	27	24	31	27	35
REINFORCING STEEL EPOXY COATED - TOTAL (LBS.)					2132		2132		2132		2132		2153		2153		2153		2151		2128

BILL OF REINFORCING STEEL - ONE ABUTMENT - 15° SKEW

	BRIDGE LENGTH			70'-0		80'-0		90'-0		100'-0		110'-0		120'-0		130'-0		140'-0		150'-0	
MARK	LOCATION	SHAPE	LENGTH	NO.	WEIGHT	NO.	WEIGHT	NO.	WEIGHT	NO.	WEIGHT	NO.	WEIGHT	NO.	WEIGHT	NO.	WEIGHT	NO.	WEIGHT	NO.	WEIGHT
8r1	ABUTMENT FOOTING LONGITUDINAL		27'-2	7	508	7	508	7	508	7	508	7	508	7	508	7	508	7	508	7	508
8r2	ABUTMENT FOOTING LONGITUDINAL		22'-1	7	413	7	413	7	413	7	413	7	413	7	413	7	413	7	413	7	413
5s1	ABUTMENT FOOTING HOOPS		11'-0	36	413	36	413	36	413	36	413	36	413	36	413	35	402	40	459	40	459
5s2	ABUTMENT FOOTING HOOPS		11'-3	4	47	4	47	4	47	4	47	4	47	4	47	4	47	4	47	4	47
6t1	FOOTING TO SLAB BARS		5'-0	46	345	46	345	46	345	46	345	46	345	46	345	46	345	46	345	46	345
6t2	FOOTING TO SLAB BARS		5'-7	46	386	46	386	46	386	46	386	46	386	46	386	46	386	46	386	46	386
#2	PILE SPIRAL		38'-6	7	45	7	45	7	45	7	45	7	45	7	45	8	51	9	58	9	58
	SPIRAL SPACERS - L $\frac{7}{8}\times\frac{7}{8}\times\frac{1}{8}\times$ 0.70		1'-10	21	27	21	27	21	27	21	27	21	27	21	27	24	31	27	35	27	35
REINFORCING STEEL EPOXY COATED - TOTAL (LBS.)					2184		2184		2184		2184		2184		2184		2183		2251		2251

BILL OF REINFORCING STEEL - ONE ABUTMENT - 30° SKEW

	BRIDGE LENGTH			70'-0		80'-0		90'-0		100'-0		110'-0		120'-0		130'-0		140'-0		150'-0	
MARK	LOCATION	SHAPE	LENGTH	NO.	WEIGHT	NO.	WEIGHT	NO.	WEIGHT	NO.	WEIGHT	NO.	WEIGHT	NO.	WEIGHT	NO.	WEIGHT	NO.	WEIGHT	NO.	WEIGHT
8r1	ABUTMENT FOOTING LONGITUDINAL		29'-6	7	551	7	551	7	551	7	551	7	551	7	551	7	551	7	551	7	551
8r2	ABUTMENT FOOTING LONGITUDINAL		24'-5	7	456	7	456	7	456	7	456	7	456	7	456	7	456	7	456	7	456
5s1	ABUTMENT FOOTING HOOPS		11'-0	42	482	42	482	42	482	42	482	42	482	42	482	42	482	40	459	40	459
5s2	ABUTMENT FOOTING HOOPS		11'-11	4	50	4	50	4	50	4	50	4	50	4	50	4	50	4	50	4	50
6t1	FOOTING TO SLAB BARS		5'-0	46	345	46	345	46	345	46	345	46	345	46	345	46	345	46	345	46	345
6t2	FOOTING TO SLAB BARS		5'-7	46	386	46	386	46	386	46	386	46	386	46	386	46	386	46	386	46	386
#2	PILE SPIRAL		38'-6	7	45	7	45	7	45	7	45	7	45	7	45	8	51	9	58	9	58
	SPIRAL SPACERS - L $\frac{7}{8}\times\frac{7}{8}\times\frac{1}{8}\times$ 0.70		1'-10	21	27	21	27	21	27	21	27	21	27	21	27	24	31	27	35	27	35
REINFORCING STEEL EPOXY COATED - TOTAL (LBS.)					2342		2342		2342		2342		2342		2342		2352		2340		2340

BILL OF REINFORCING STEEL - ONE ABUTMENT - 45° SKEW

	BRIDGE LENGTH			70'-0		80'-0		90'-0		100'-0		110'-0		120'-0		130'-0		140'-0		150'-0	
MARK	LOCATION	SHAPE	LENGTH	NO.	WEIGHT	NO.	WEIGHT	NO.	WEIGHT	NO.	WEIGHT	NO.	WEIGHT	NO.	WEIGHT	NO.	WEIGHT	NO.	WEIGHT	NO.	WEIGHT
8r1	ABUTMENT FOOTING LONGITUDINAL		34'-8	7	648	7	648	7	648	7	648	7	648	7	648	7	648	7	648	7	648
8r2	ABUTMENT FOOTING LONGITUDINAL		29'-7	7	553	7	553	7	553	7	553	7	553	7	553	7	553	7	553	7	553
5s1	ABUTMENT FOOTING HOOPS		11'-0	56	642	56	642	56	642	56	642	56	642	56	642	56	642	56	642	54	620
5s2	ABUTMENT FOOTING HOOPS		13'-6	4	56	4	56	4	56	4	56	4	56	4	56	4	56	4	56	4	56
6t1	FOOTING TO SLAB BARS		5'-0	46	345	46	345	46	345	46	345	46	345	46	345	46	345	46	345	46	345
6t2	FOOTING TO SLAB BARS		5'-7	46	386	46	386	46	386	46	386	46	386	46	386	46	386	46	386	46	386
#2	PILE SPIRAL		38'-6	9	58	9	58	9	58	9	58	9	58	9	58	9	58	9	58	10	64
	SPIRAL SPACERS - L $\frac{7}{8}\times\frac{7}{8}\times\frac{1}{8}\times$ 0.70		1'-10	27	35	27	35	27	35	27	35	27	35	27	35	27	35	27	35	30	39
REINFORCING STEEL EPOXY COATED - TOTAL (LBS.)					2723		2723		2723		2723		2723		2723		2723		2723		2711

NOTE: THE PILE SPIRALS AND SPIRAL SPACERS ARE TO BE NON-COATED REINFORCING BUT MAY BE EPOXY COATED AT THE CONTRACTORS OPTION AND EXPENSE.

ESTIMATED QUANTITIES - ONE ABUT. - 0° SKEW

LOCATION	UNIT	QUANTITY								
BRIDGE LENGTH		70'-0	80'-0	90'-0	100'-0	110'-0	120'-0	130'-0	140'-0	150'-0
STRUCTURAL CONCRETE (BRIDGE)	C.Y.	14.4	14.4	14.4	14.4	14.4	14.4	14.4	14.4	14.4
REINFORCING STEEL EPOXY COATED	LBS.	2132	2132	2132	2132	2153	2153	2153	2151	2128
STEEL PILING HP 10 x 42	NO.	6	6	6	6	7	7	7	8	9
PREBORE HOLES	FT.	-	-	-	-	-	-	-	80	90

ESTIMATED QUANTITIES - ONE ABUT. - 15° SKEW

LOCATION	UNIT	QUANTITY								
BRIDGE LENGTH		70'-0	80'-0	90'-0	100'-0	110'-0	120'-0	130'-0	140'-0	150'-0
STRUCTURAL CONCRETE (BRIDGE)	C.Y.	14.9	14.9	14.9	14.9	14.9	14.9	14.9	14.9	14.9
REINFORCING STEEL EPOXY COATED	LBS.	2184	2184	2184	2184	2184	2184	2183	2251	2251
STEEL PILING HP 10 x 42	NO.	7	7	7	7	7	7	8	9	9
PREBORE HOLES	FT.	-	-	-	-	-	-	-	90	90

ESTIMATED QUANTITIES - ONE ABUT. - 30° SKEW

LOCATION	UNIT	QUANTITY								
BRIDGE LENGTH		70'-0	80'-0	90'-0	100'-0	110'-0	120'-0	130'-0	140'-0	150'-0
STRUCTURAL CONCRETE (BRIDGE)	C.Y.	16.6	16.6	16.6	16.6	16.6	16.6	16.6	16.6	16.6
REINFORCING STEEL EPOXY COATED	LBS.	2342	2342	2342	2342	2342	2342	2352	2340	2340
STEEL PILING HP 10 x 42	NO.	7	7	7	7	7	7	8	9	9
PREBORE HOLES	FT.	-	-	-	-	-	-	-	90	90

ESTIMATED QUANTITIES - ONE ABUT. - 45° SKEW

LOCATION	UNIT	QUANTITY								
BRIDGE LENGTH		70'-0	80'-0	90'-0	100'-0	110'-0	120'-0	130'-0	140'-0	150'-0
STRUCTURAL CONCRETE (BRIDGE)	C.Y.	20.4	20.4	20.4	20.4	20.4	20.4	20.4	20.4	20.4
REINFORCING STEEL EPOXY COATED	LBS.	2723	2723	2723	2723	2723	2723	2723	2723	2711
STEEL PILING HP 10 x 42	NO.	9	9	9	9	9	9	9	9	10
PREBORE HOLES	FT.	-	-	-	-	-	-	-	90	100

BENT BAR DETAILS

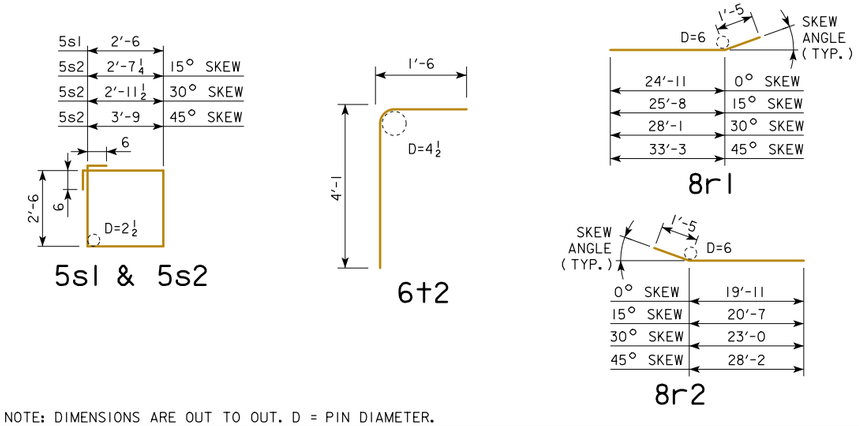

NOTE: DIMENSIONS ARE OUT TO OUT. D = PIN DIAMETER.

LATEST REVISION DATE

APPROVED BY BRIDGE ENGINEER

IOWA DOT Highway Division

STANDARD DESIGN - 40' ROADWAY, 3 SPAN BRIDGES

CONTINUOUS CONCRETE SLAB BRIDGES

JULY, 2014

ABUTMENT DETAILS
STEEL PILING

J40-44-14

TABLE OF BARRIER RAIL DIMENSIONS AND NUMBERS

BRIDGE LENGTH		70′-0				80′-0				90′-0				100′-0			
SKEW		0°	15°	30°	45°	0°	15°	30°	45°	0°	15°	30°	45°	0°	15°	30°	45°
DIMENSION OR NUMBER	A (FT.-IN.)	81′-0	81′-1 1/4	81′-5 1/2	82′-3	91′-0	91′-1 1/4	91′-5 1/2	92′-3	101′-0	101′-1 1/4	101′-5 1/2	102′-3	111′-0	111′-1 1/4	111′-5 1/2	112′-3
	B (FT.-IN.)	67′-0	67′-1 1/4	67′-5 1/2	68′-3	77′-0	77′-1 1/4	77′-5 1/2	78′-3	87′-0	87′-1 1/4	87′-5 1/2	88′-3	97′-0	97′-1 1/4	97′-5 1/2	98′-3
	C	66	66	66	67	76	76	76	77	86	86	86	87	96	96	96	97
	D (FT.-IN.)	66′-0	66′-0	66′-0	67′-0	76′-0	76′-0	76′-0	77′-0	86′-0	86′-0	86′-0	87′-0	96′-0	96′-0	96′-0	97′-0
	E	67	67	67	68	77	77	77	78	87	87	87	88	97	97	97	98
	F (IN.)	6	6 5/8	8 3/4	7 1/2	6	6 5/8	8 3/4	7 1/2	6	6 5/8	8 3/4	7 1/2	6	6 5/8	8 3/4	7 1/2

BRIDGE LENGTH		110′-0				120′-0				130′-0				140′-0				150′-0			
SKEW		0°	15°	30°	45°	0°	15°	30°	45°	0°	15°	30°	45°	0°	15°	30°	45°	0°	15°	30°	45°
DIMENSION OR NUMBER	A (FT.-IN.)	121′-0	121′-1 1/4	121′-5 1/2	122′-3	131′-0	131′-1 1/4	131′-5 1/2	132′-3	141′-0	141′-1 1/4	141′-5 1/2	142′-3	151′-0	151′-1 1/4	151′-5 1/2	152′-3	161′-0	161′-1 1/4	161′-5 1/2	162′-3
	B (FT.-IN.)	107′-0	107′-1 1/4	107′-5 1/2	108′-3	117′-0	117′-1 1/4	117′-5 1/2	118′-3	127′-0	127′-1 1/4	127′-5 1/2	128′-3	137′-0	137′-1 1/4	137′-5 1/2	138′-3	147′-0	147′-1 1/4	147′-5 1/2	148′-3
	C	106	106	106	107	116	116	116	117	126	126	126	127	136	136	136	137	146	146	146	147
	D (FT.-IN.)	106′-0	106′-0	106′-0	107′-0	116′-0	116′-0	116′-0	117′-0	126′-0	126′-0	126′-0	127′-0	136′-0	136′-0	136′-0	137′-0	146′-0	146′-0	146′-0	147′-0
	E	107	107	107	108	117	117	117	118	127	127	127	128	137	137	137	138	147	147	147	148
	F (IN.)	6	6 5/8	8 3/4	7 1/2	6	6 5/8	8 3/4	7 1/2	6	6 5/8	8 3/4	7 1/2	6	6 5/8	8 3/4	7 1/2	6	6 5/8	8 3/4	7 1/2

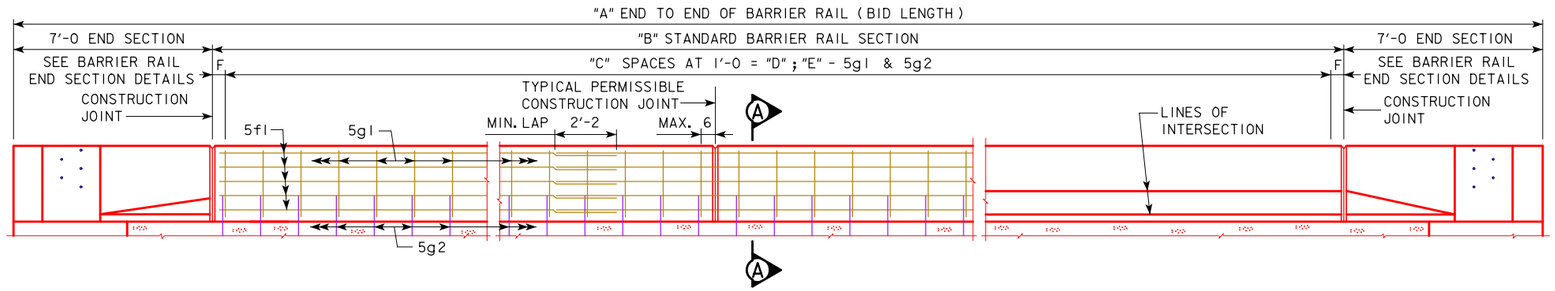

ELEVATION OF BARRIER RAIL

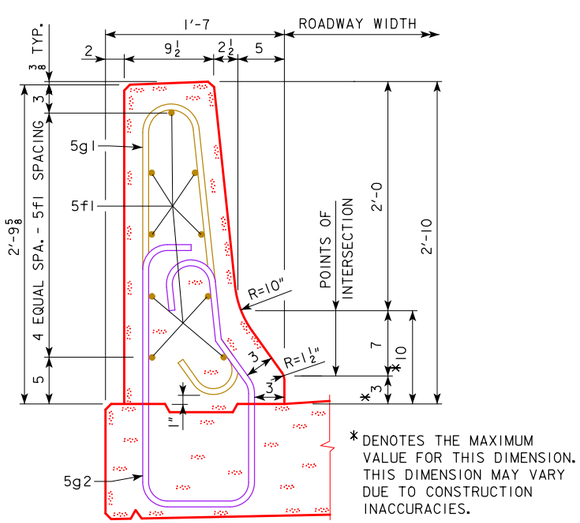

PART SECTION A-A

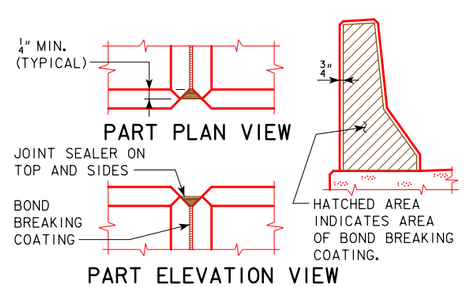

BARRIER RAIL JOINT DETAILS

BARRIER RAIL NOTES:

MINIMUM CLEAR DISTANCE FROM FACE OF CONCRETE TO NEAR REINFORCING BAR IS TO BE 2" UNLESS OTHERWISE NOTED OR SHOWN.

THE PERMISSIBLE CONSTRUCTION JOINTS ARE TO BE PLACED BETWEEN VERTICAL BARS AT A MINIMUM SPACING OF 20 FEET. CONSTRUCTION JOINT CONTACT SURFACES ARE TO BE COATED WITH AN APPROVED BOND BREAKER.

COST OF THE JOINT SEALER AND BOND BREAKER SHALL BE CONSIDERED INCIDENTAL TO OTHER CONSTRUCTION.

THE CONCRETE BARRIER RAIL IS TO BE BID ON A LINEAL FOOT BASIS. THE NUMBER OF LINEAL FEET OF BARRIER RAIL INSTALLED WILL BE PAID FOR AT THE CONTRACT PRICE PER LINEAL FOOT BASED ON PLAN QUANTITIES. PRICE BID FOR "CONCRETE BARRIER RAILING" SHALL BE FULL COMPENSATION FOR FURNISHING ALL MATERIAL, EXCLUDING REINFORCING STEEL, AND ALL OF THE EQUIPMENT AND LABOR REQUIRED TO ERECT THE RAIL IN ACCORDANCE WITH THESE PLANS AND CURRENT SPECIFICATIONS.

IF CONDUIT IS REQUIRED IN THIS PLAN THE RIGID STEEL CONDUIT, JUNCTION BOXES AND FITTINGS INCLUDING LABOR AND ANY ADDITIONAL WORK TO DO THE INSTALLATION IS CONSIDERED INCIDENTAL TO THE COST OF THE RAILING.

ALL BARRIER RAIL REINFORCING STEEL IS TO BE INCLUDED WITH THE SUPERSTRUCTURE REINFORCING STEEL.

THE JOINT SEALER SHALL BE LIGHT GRAY NONSAG LATEX CAULKING SEALER MARKETED FOR OUTDOOR USE. NO TESTING OR CERTIFICATION IS REQUIRED.

TOP OF THE BARRIER RAIL IS TO BE PARALLEL TO THE THEORETICAL ℄ GRADE.

CROSS SECTIONAL AREA OF THE STANDARD SECTION OF THE BARRIER RAIL = 2.84 SQUARE FEET.

ALL BARRIER RAIL REINFORCING STEEL IS TO BE EITHER EPOXY COATED OR STAINLESS STEEL AS SHOWN OR NOTED. THE STAINLESS STEEL REINFORCING STEEL SHALL BE DEFORMED BAR GRADE 60 MEETING THE REQUIREMENTS OF MATERIALS I.M.452.

CONCRETE BARRIER RAILS PLACED USING THE SLIPFORM METHOD WILL REQUIRE THE USE OF A CLASS BR CONCRETE IN ACCORDANCE WITH ARTICLE 2513.03, A, 2, OF THE STANDARD SPECIFICATION. CAST-IN-PLACE BARRIER RAILS SHALL USE CLASS C MIX. CLASS D CONCRETE IS NOT PERMITTED FOR CONCRETE BARRIER RAILS (CAST-IN-PLACE OR SLIPFORMED METHOD).

LATEST REVISION DATE

APPROVED BY BRIDGE ENGINEER

IOWA DOT Highway Division

STANDARD DESIGN - 40′ ROADWAY, 3 SPAN BRIDGES

CONTINUOUS CONCRETE SLAB BRIDGES

JULY, 2014

BARRIER RAIL DETAILS

J40-45-14

EPOXY REINFORCING STEEL-TWO BARRIER RAILS

BRIDGE LENGTH				70'-0			80'-0			90'-0			100'-0			110'-0			120'-0			130'-0			140'-0			150'-0		
SECTION	BAR	LOCATION	SHAPE	NO.	LENGTH	WEIGHT	NO.	LENGTH	WEIGHT	NO.	LENGTH	WEIGHT	NO.	LENGTH	WEIGHT	NO.	LENGTH	WEIGHT	NO.	LENGTH	WEIGHT	NO.	LENGTH	WEIGHT	NO.	LENGTH	WEIGHT	NO.	LENGTH	WEIGHT
STANDARD SECTION	5g1	VERTICAL		136	5'-11	839	156	5'-11	963	176	5'-11	1086	196	5'-11	1210	216	5'-11	1333	236	5'-11	1456	256	5'-11	1580	276	5'-11	1703	296	5'-11	1827
	5f1	LONGITUDINAL		36	35'-1	1317	54	27'-5	1544	54	30'-9	1732	54	34'-1	1920	54	37'-5	2107	72	31'-2	2340	72	33'-8	2528	72	36'-2	2716	72	38'-8	2904
		4 END SECTIONS @ 266 LBS.				1064			1064			1064			1064			1064			1064			1064			1064			1064
(INCLUDE WITH SUPERSTRUCTURE REINFORCING)				TOTAL (LBS.)		3220	TOTAL (LBS.)		3571	TOTAL (LBS.)		3882	TOTAL (LBS.)		4194	TOTAL (LBS.)		4504	TOTAL (LBS.)		4860	TOTAL (LBS.)		5172	TOTAL (LBS.)		5483	TOTAL (LBS.)		5795

REINFORCING QUANTITIES SHOWN ARE BASED ON 45° SKEW BID LENGTHS.

STAINLESS STEEL REINFORCING STEEL-TWO BARRIER RAILS

BRIDGE LENGTH				70'-0			80'-0			90'-0			100'-0			110'-0			120'-0			130'-0			140'-0			150'-0		
SECTION	BAR	LOCATION	SHAPE	NO.	LENGTH	WEIGHT	NO.	LENGTH	WEIGHT	NO.	LENGTH	WEIGHT	NO.	LENGTH	WEIGHT	NO.	LENGTH	WEIGHT	NO.	LENGTH	WEIGHT	NO.	LENGTH	WEIGHT	NO.	LENGTH	WEIGHT	NO.	LENGTH	WEIGHT
STANDARD SECTION	5g2	VERTICAL		136	6'-10	969	156	6'-11	1125	176	7'-1	1300	196	7'-4	1499	216	7'-6	1690	236	7'-9	1908	256	7'-11	2114	276	8'-2	2351	296	8'-5	2598
		4 END SECTIONS @ 192 LBS.				768			768			768			768			768			768			768			768			768
(INCLUDE WITH SUPERSTRUCTURE REINFORCING)				TOTAL (LBS.)		1737	TOTAL (LBS.)		1893	TOTAL (LBS.)		2068	TOTAL (LBS.)		2267	TOTAL (LBS.)		2458	TOTAL (LBS.)		2676	TOTAL (LBS.)		2882	TOTAL (LBS.)		3119	TOTAL (LBS.)		3366

REINFORCING QUANTITIES SHOWN ARE BASED ON 45° SKEW BID LENGTHS.

BENT BAR DETAILS

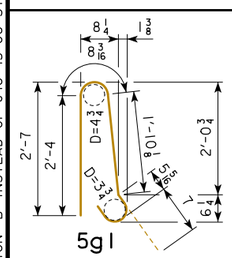

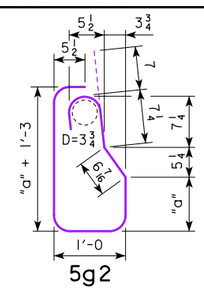

NOTE: ALL DIMENSIONS ARE OUT TO OUT.
"D"= PIN DIAMETER.

5g2 BARS		
BRIDGE	"a"	LENGTH
70'	1'-2	6'-10
80'	1'-2 3/4	6'-11
90'	1'-3 3/4	7'-1
100'	1'-5	7'-4
110'	1'-6	7'-6
120'	1'-7 1/2	7'-9
130'	1'-8 3/4	7'-11
140'	1'-10	8'-2
150'	1'-11 1/2	8'-5

CONCRETE PLACEMENT SUMMARY

BRIDGE LENGTH	70'-0	80'-0	90'-0	100'-0	110'-0	120'-0	130'-0	140'-0	150'-0
STANDARD SECTION * 2 x "B" @ 0.1052 CU. YDS. PER FT.	14.4	16.5	18.6	20.7	22.8	24.9	27.0	29.1	31.2
END SECTION 4 @ 0.65 CU. YDS.	2.6	2.6	2.6	2.6	2.6	2.6	2.6	2.6	2.6
TOTAL (CU. YDS.)	17.0	19.1	21.2	23.3	25.4	27.5	29.6	31.7	33.8

* SEE J40-45-14 FOR DIMENSION "B".
CONCRETE QUANTITIES SHOWN ARE
BASED ON 45° SKEW BID LENGTHS.

CONCRETE BARRIER RAIL QUANTITIES

BRIDGE LENGTH		UNIT	70'-0	80'-0	90'-0	100'-0	110'-0	120'-0	130'-0	140'-0	150'-0
CONCRETE BARRIER RAILING	0° SKEW	L.F.	162.0	182.0	202.0	222.0	242.0	262.0	282.0	302.0	322.0
CONCRETE BARRIER RAILING	15° SKEW	L.F.	162.2	182.2	202.2	222.2	242.2	262.2	282.2	302.2	322.2
CONCRETE BARRIER RAILING	30° SKEW	L.F.	162.9	182.9	202.9	222.9	242.9	262.9	282.9	302.9	322.9
CONCRETE BARRIER RAILING	45° SKEW	L.F.	164.5	184.5	204.5	224.5	244.5	264.5	284.5	304.5	324.5

09-14
LATEST REVISION DATE

APPROVED BY BRIDGE ENGINEER

IOWA DOT Highway Division

STANDARD DESIGN - 40' ROADWAY, 3 SPAN BRIDGES
CONTINUOUS CONCRETE
SLAB BRIDGES
JULY, 2014

BARRIER RAIL DETAILS

J40-46-14

REVISED 09-14 - CHANGED REFERENCE TO THE J40-45-14 STANDARD FOR DIMENSION "B" INSTEAD OF J40-45-06 STANDARD.

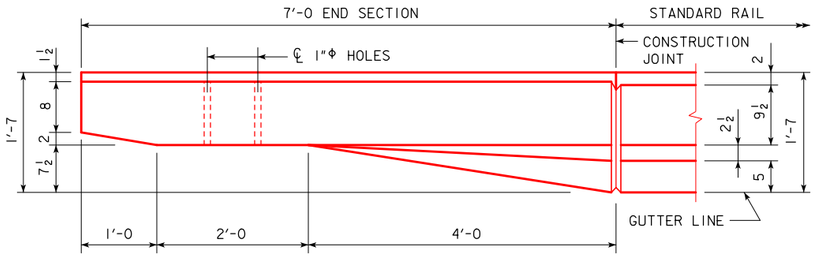

PART PLAN VIEW

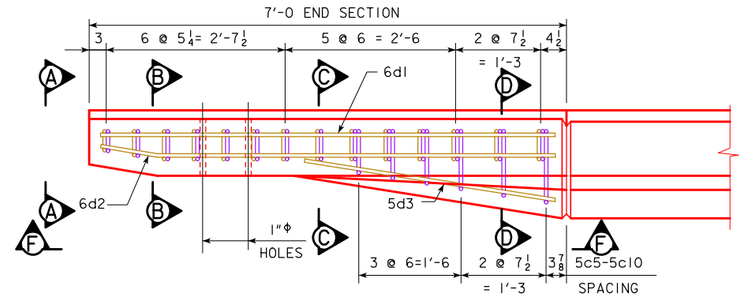

PART VIEW E-E

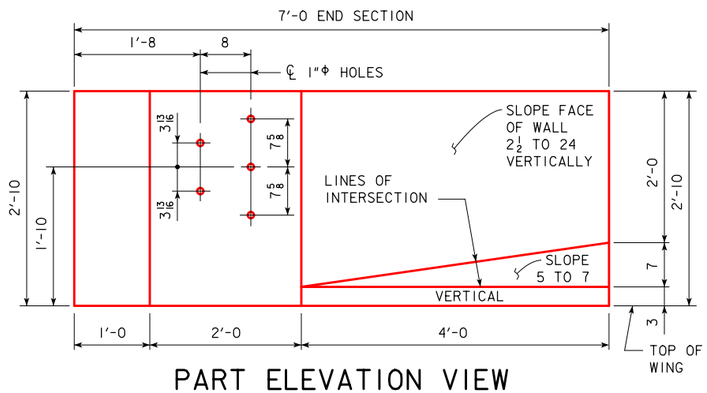

PART ELEVATION VIEW

PROVIDE 5 HOLES FORMED WITH 1"Φ PVC PIPE. COST TO BE INCLUDED IN PRICE BID FOR CONCRETE BARRIER RAILING.

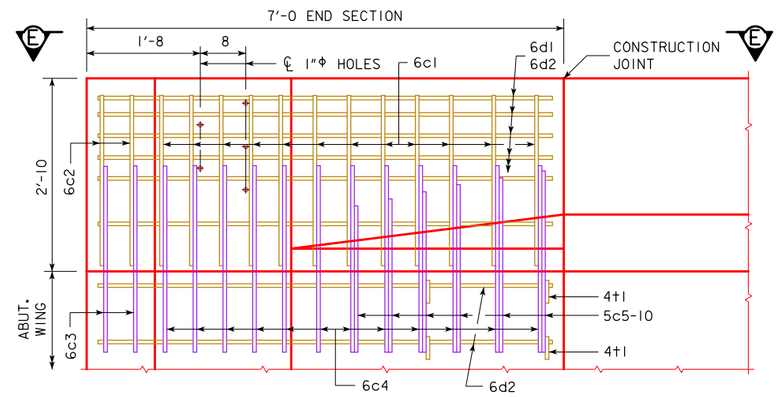

PART VIEW F-F

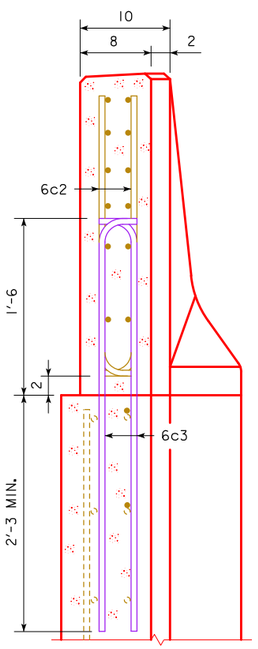

VIEW A-A

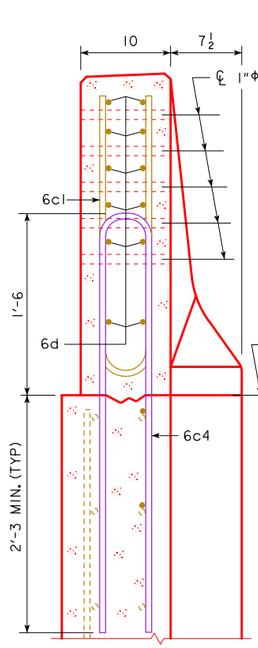

SECTION B-B

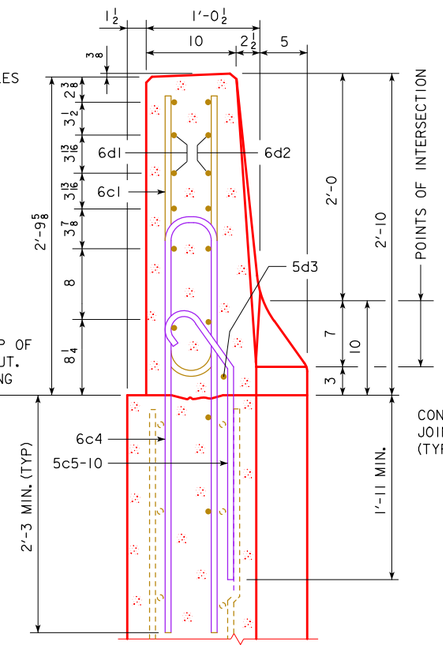

SECTION C-C

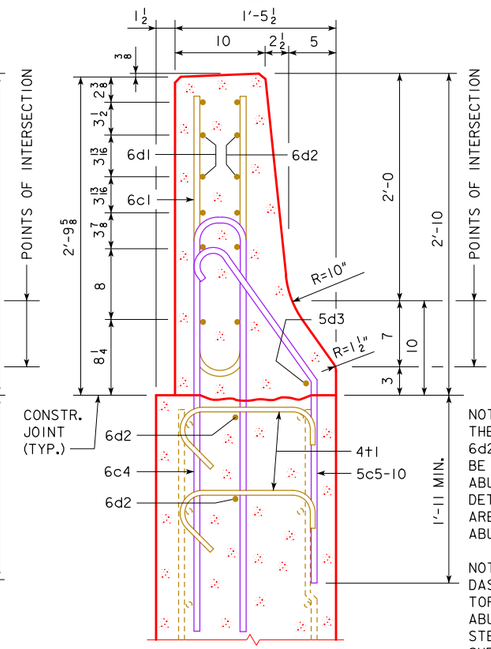

SECTION D-D

NOTE:
4t1 PLACEMENT- 2 BARS EACH LEVEL OF 6d2 IN WING FOOTING.

NOTE:
CONSTRUCTION JOINT BETWEEN TOP OF WING AND BARRIER RAIL IS ROUGHENED CONCRETE.

NOTE:
THE 10" RADIUS AND 1½" RADIUS ARE TYPICAL AND SHALL BE USED WHEN CONSTRUCTING THE CORNERS FOR VIEW A-A, SECTION B-B, SECTION C-C AND SECTION D-D.

NOTE:
THE 6c4, 6c3, 5c5-10, 2 - 6d2 AND 4t1 BARS ARE TO BE PLACED WITH THE ABUTMENT WING. THE DETAILS FOR PLACEMENT ARE SHOWN ON THE WING ABUTMENT SHEET.

NOTE:
DASHED LINES BELOW THE TOP OF WING ARE THE ABUTMENT WING REINFORCING STEEL. SEE WING ABUTMENT SHEET FOR PLACEMENT.

EPOXY COATED REINF. STEEL - ONE END SECT.

BAR	LOCATION	SHAPE	NO.	LENGTH	WEIGHT
6c1	RAIL, VERTICAL		12	5'-6	99
6c2	RAIL, VERTICAL		4	2'-10	17
6d1	RAIL, HORIZONTAL		6	6'-8	60
6d2	RAIL, HORIZONTAL		8	6'-9	81
5d3	RAIL, HORIZONTAL		1	3'-9	4
4t1	RAIL, ABUTMENT WING TIE BARS		4	VARIES	5
			EPOXY REINF. TOTAL WEIGHT (LBS.)		266

STAINLESS STEEL REINF. STEEL - ONE END SECT.

BAR	LOCATION	SHAPE	NO.	LENGTH	WEIGHT
6c3	RAIL, VERTICAL		4	4'-1	25
6c4	RAIL, VERTICAL		12	8'-0	144
5c5-10	RAIL, VERTICAL		6	VARIES	23
			STAINLESS STEEL TOTAL WEIGHT (LBS.)		192

CONCRETE PLACEMENT SUMMARY

SECTION	TOTAL
BARRIER RAIL ONE END SECTION	0.65 CU. YD.

BENT BAR DETAILS

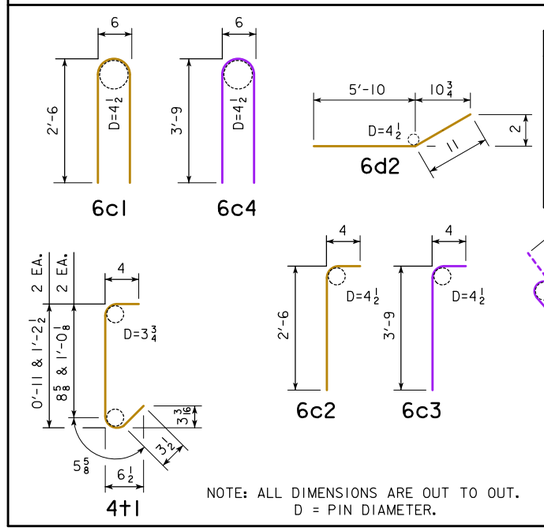

BAR	"X"
5c5	0'-6½
5c6	0'-8½
5c7	0'-10¼
5c8	1'-0¼
5c9	1'-2
5c10	1'-4

09-2016
LATEST REVISION DATE

APPROVED BY BRIDGE ENGINEER

IOWA DOT Highway Division

STANDARD DESIGN - 40' ROADWAY, 3 SPAN BRIDGES

CONTINUOUS CONCRETE SLAB BRIDGES

JULY, 2014

BARRIER RAIL END SECTION

J40-47-14

REVISED 03-2016 - REFERENCE TO "1"Φ PVC PIPE" WAS CHANGED FROM "1"Φ PLASTIC CONDUIT".
REVISED 09-2016 - REMOVED "NOTE: REINFORCING STEEL QUANTITIES ARE INCLUDED ON THE SUMMARY QUANTITIES SHEET."

TABLE OF OPEN RAIL DIMENSIONS AND NUMBERS

℄-℄ ABUT. BRG		70′-0				80′-0				90′-0				100′-0			
SKEW		0°	15°	30°	45°	0°	15°	30°	45°	0°	15°	30°	45°	0°	15°	30°	45°
DIMENSION OR NUMBER	A (FT.-IN.)	81′-0	81′-1 1/4	81′-5 1/2	82′-3	91′-0	91′-1 1/4	91′-5 1/2	92′-3	101′-0	101′-1 1/4	101′-5 1/2	102′-3	111′-0	111′-1 1/4	111′-5 1/2	112′-3
	B (FT.-IN.)	67′-0	67′-1 1/4	67′-5 1/2	68′-3	77′-0	77′-1 1/4	77′-5 1/2	78′-3	87′-0	87′-1 1/4	87′-5 1/2	88′-3	97′-0	97′-1 1/4	97′-5 1/2	98′-3
	C	8	8	8	8	10	10	10	10	11	11	11	11	12	12	12	12
	D (FT.-IN.)	7′-10 1/2	7′-10 11/16	7′-11 3/16	7′-11 7/8	7′-3 5/8	7′-3 3/4	7′-4 3/16	7′-4 11/16	7′-6 9/16	7′-6 11/16	7′-7 1/16	7′-7 9/16	7′-9	7′-9 1/8	7′-9 7/16	7′-9 15/16

℄-℄ ABUT. BRG		110′-0				120′-0				130′-0				140′-0				150′-0			
SKEW		0°	15°	30°	45°	0°	15°	30°	45°	0°	15°	30°	45°	0°	15°	30°	45°	0°	15°	30°	45°
DIMENSION OR NUMBER	A (FT.-IN.)	121′-0	121′-1 1/4	121′-5 1/2	122′-3	131′-0	131′-1 1/4	131′-5 1/2	132′-3	141′-0	141′-1 1/4	141′-5 1/2	142′-3	151′-0	151′-1 1/4	151′-5 1/2	152′-3	161′-0	161′-1 1/4	161′-5 1/2	162′-3
	B (FT.-IN.)	107′-0	107′-1 1/4	107′-5 1/2	108′-3	117′-0	117′-1 1/4	117′-5 1/2	118′-3	127′-0	127′-1 1/4	127′-5 1/2	128′-3	137′-0	137′-1 1/4	137′-5 1/2	138′-3	147′-0	147′-1 1/4	147′-5 1/2	148′-3
	C	13	13	13	13	15	15	15	15	16	16	16	16	17	17	17	17	18	18	18	18
	D (FT.-IN.)	7′-11 1/16	7′-11 3/16	7′-11 1/2	7′-11 15/16	7′-6 3/8	7′-6 1/2	7′-6 3/4	7′-7 1/8	7′-8 1/4	7′-8 5/16	7′-8 5/8	7′-8 15/16	7′-9 7/8	7′-9 15/16	7′-10 3/16	7′-10 1/2	7′-11 5/16	7′-11 3/8	7′-11 5/8	7′-11 15/16

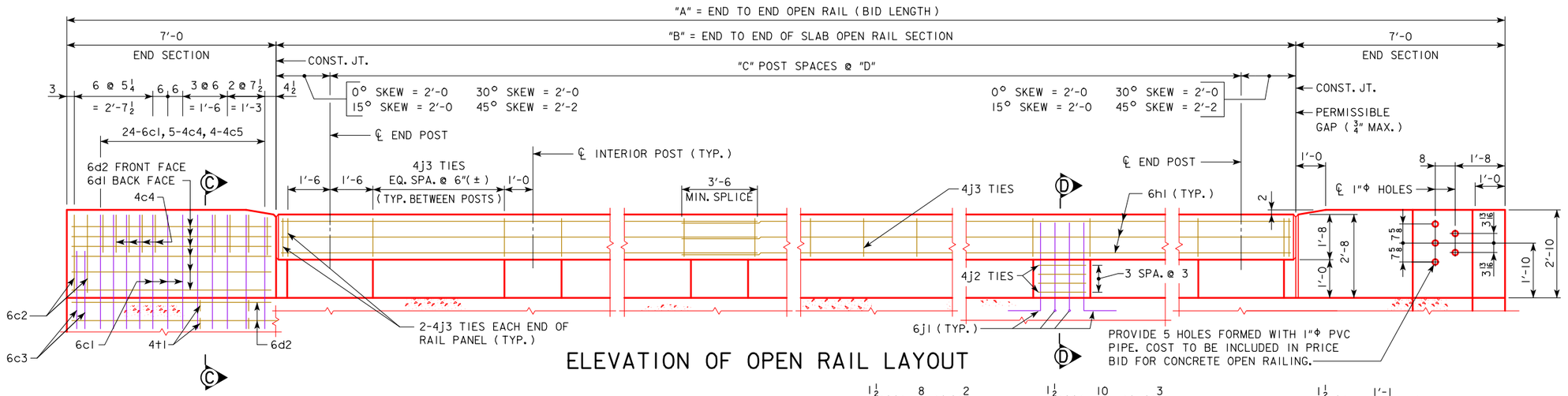

ELEVATION OF OPEN RAIL LAYOUT

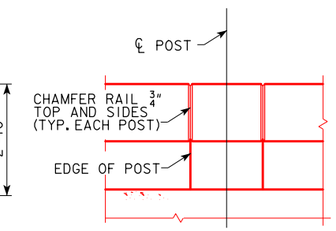

RAIL CHAMFER DETAIL

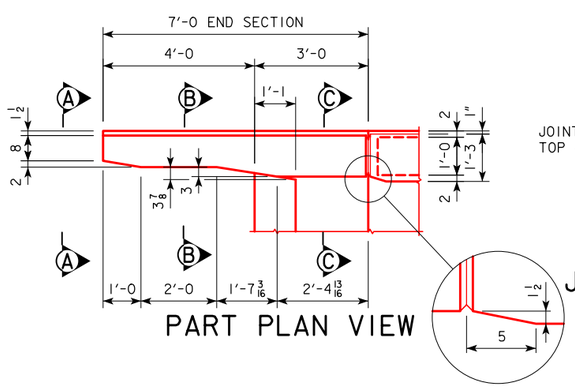

PART PLAN VIEW

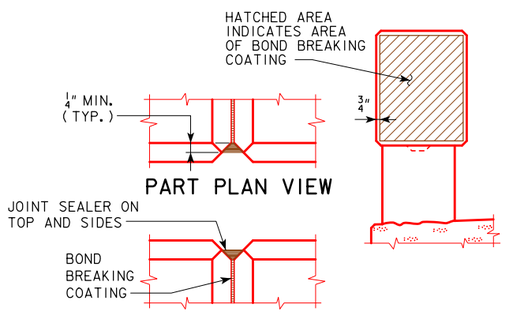

PART PLAN VIEW

PART ELEVATION VIEW

JOINT DETAILS AT END SECTION

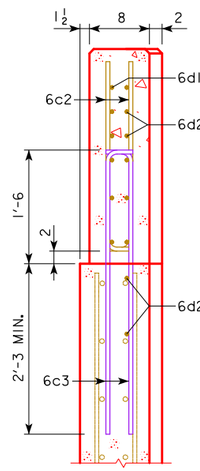

VIEW A-A

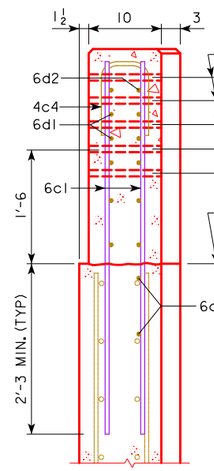

SECTION B-B

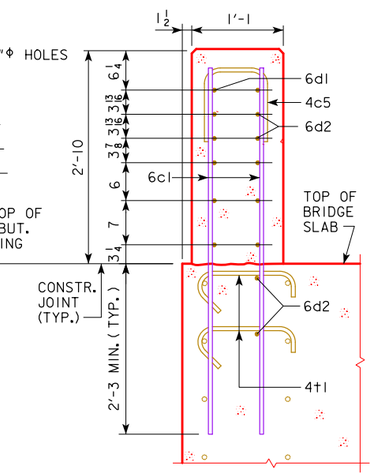

SECTION C-C

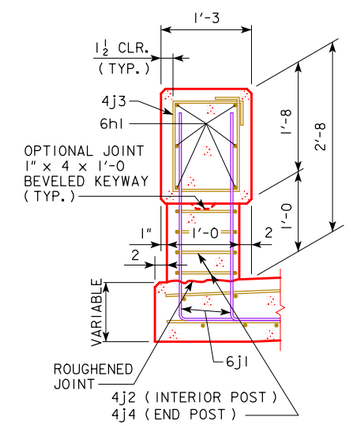

PART SECTION D-D

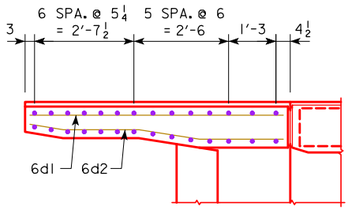

PART PLAN SECTION

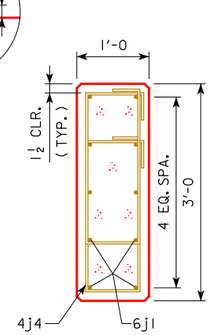

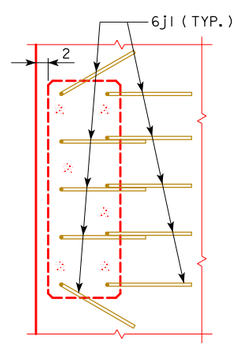

END POST DETAILS (REQUIRED AT ENDS OF OPEN RAIL)

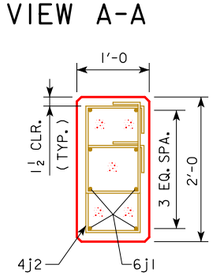

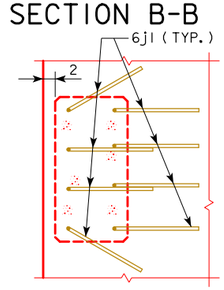

INTERIOR POST DETAILS

03-2016
LATEST REVISION DATE

APPROVED BY BRIDGE ENGINEER

IOWA DOT Highway Division

STANDARD DESIGN - 40′ ROADWAY, 3 SPAN BRIDGES

CONTINUOUS CONCRETE SLAB BRIDGES

JULY, 2014

OPEN RAIL DETAILS (TL-4)

J40-48-14

REVISED 03-2016 - REFERENCE TO "1″Φ PVC PIPE" WAS CHANGED FROM "1″Φ PLASTIC CONDUIT".

EPOXY REINFORCING STEEL-TWO OPEN RAILS

BRIDGE LENGTH			70'-0			80'-0			90'-0			100'-0			110'-0			120'-0			130'-0			140'-0			150'-0		
BAR	LOCATION	SHAPE	NO.	LENGTH	WEIGHT	NO.	LENGTH	WEIGHT	NO.	LENGTH	WEIGHT	NO.	LENGTH	WEIGHT	NO.	LENGTH	WEIGHT	NO.	LENGTH	WEIGHT	NO.	LENGTH	WEIGHT	NO.	LENGTH	WEIGHT	NO.	LENGTH	WEIGHT
6c2	VERTICAL		16	2'-10	68	16	2'-10	68	16	2'-10	68	16	2'-10	68	16	2'-10	68	16	2'-10	68	16	2'-10	68	16	2'-10	68	16	2'-10	68
4c4	VERTICAL HOOPS		20	2'-10	38	20	2'-10	38	20	2'-10	38	20	2'-10	38	20	2'-10	38	20	2'-10	38	20	2'-10	38	20	2'-10	38	20	2'-10	38
4c5	VERTICAL HOOPS		16	3'-1	33	16	3'-1	33	16	3'-1	33	16	3'-1	33	16	3'-1	33	16	3'-1	33	16	3'-1	33	16	3'-1	33	16	3'-1	33
6d1	HORIZONTAL		24	6'-8	240	24	6'-8	240	24	6'-8	240	24	6'-8	240	24	6'-8	240	24	6'-8	240	24	6'-8	240	24	6'-8	240	24	6'-8	240
6d2	HORIZONTAL		32	6'-9	324	32	6'-9	324	32	6'-9	324	32	6'-9	324	32	6'-9	324	32	6'-9	324	32	6'-9	324	32	6'-9	324	32	6'-9	324
6h1	LONGITUDINAL OPEN RAIL		24	35'-9	1289	36	28'-4	1532	36	31'-8	1712	36	35'-0	1893	36	38'-4	2073	48	32'-2	2319	48	34'-8	2499	48	37'-2	2680	60	32'-5	2921
4j2	HOOPS INTERIOR POSTS		112	4'-8	349	144	4'-8	449	160	4'-8	499	176	4'-8	549	192	4'-8	599	224	4'-8	698	240	4'-8	748	256	4'-8	798	272	4'-8	848
4j3	HOOPS OPEN RAIL		212	5'-5	767	244	5'-5	883	290	5'-5	1049	316	5'-5	1143	342	5'-5	1237	394	5'-5	1426	420	5'-5	1520	446	5'-5	1614	472	5'-5	1708
4j4	HOOPS END POSTS		32	6'-5	137	32	6'-5	137	32	6'-5	137	32	6'-5	137	32	6'-5	137	32	6'-5	137	32	6'-5	137	32	6'-5	137	32	6'-5	137
4t1	WING FOOTING TIE BARS		16	VARIES	21	16	VARIES	21	16	VARIES	21	16	VARIES	21	16	VARIES	21	16	VARIES	21	16	VARIES	21	16	VARIES	21	16	VARIES	21
(INCLUDE WITH SUPERSTRUCTURE REINFORCING)		TOTAL (LBS.)			3266			3725			4121			4446			4770			5304			5628			5953			6338

REINFORCING QUANTITIES SHOWN ARE BASED ON 45° SKEW BID LENGTHS.

STAINLESS STEEL REINFORCING STEEL-TWO OPEN RAILS

BRIDGE LENGTH			70'-0			80'-0			90'-0			100'-0			110'-0			120'-0			130'-0			140'-0			150'-0		
BAR	LOCATION	SHAPE	NO.	LENGTH	WEIGHT	NO.	LENGTH	WEIGHT	NO.	LENGTH	WEIGHT	NO.	LENGTH	WEIGHT	NO.	LENGTH	WEIGHT	NO.	LENGTH	WEIGHT	NO.	LENGTH	WEIGHT	NO.	LENGTH	WEIGHT	NO.	LENGTH	WEIGHT
6c1	VERTICAL		96	4'-11	709	96	4'-11	709	96	4'-11	709	96	4'-11	709	96	4'-11	709	96	4'-11	709	96	4'-11	709	96	4'-11	709	96	4'-11	709
6c3	VERTICAL		16	4'-1	98	16	4'-1	98	16	4'-1	98	16	4'-1	98	16	4'-1	98	16	4'-1	98	16	4'-1	98	16	4'-1	98	16	4'-1	98
6j1	VERTICAL BARS OPEN RAIL		152	4'-6	1027	184	4'-7	1267	200	4'-8	1402	216	4'-9	1541	232	4'-10	1684	264	4'-11	1950	280	5'-1	2138	296	5'-2	2297	312	5'-3	2460
(INCLUDE WITH SUPERSTRUCTURE REINFORCING)		TOTAL (LBS.)			1834			2074			2209			2348			2491			2757			2945			3104			3267

REINFORCING QUANTITIES SHOWN ARE BASED ON 45° SKEW BID LENGTHS.

BENT BAR DETAILS

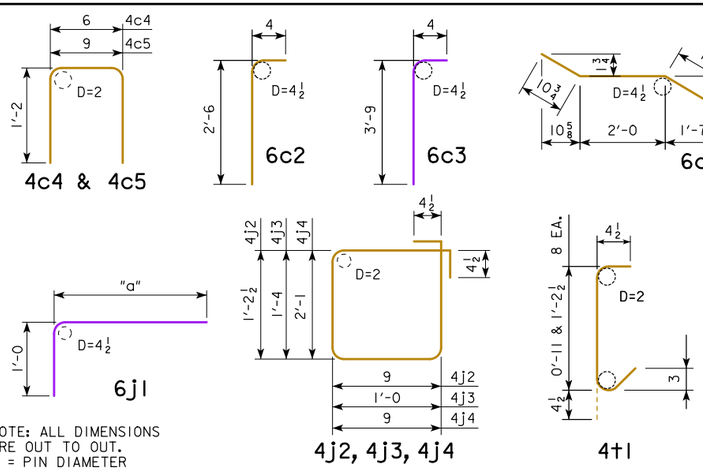

NOTE: ALL DIMENSIONS ARE OUT TO OUT.
D = PIN DIAMETER

6j1 BARS		
BRIDGE	"a"	LENGTH
70'	3'-6	4'-6
80'	3'-7	4'-7
90'	3'-8	4'-8
100'	3'-9	4'-9
110'	3'-10	4'-10
120'	3'-11	4'-11
130'	4'-1	5'-1
140'	4'-2	5'-2
150'	4'-3	5'-3

OPEN RAIL NOTES:

MINIMUM CLEAR DISTANCE FROM FACE OF CONCRETE TO NEAR REINFORCING BAR IS TO BE 2" UNLESS OTHERWISE NOTED OR SHOWN.

COST OF THE JOINT SEALER AND BOND BREAKER SHALL BE CONSIDERED INCIDENTAL TO OTHER CONSTRUCTION.

THE CONCRETE OPEN RAIL IS TO BE BID ON A LINEAL FOOT BASIS MEASURED FROM END TO END OF RAIL. THE NUMBER OF LINEAL FEET OF OPEN RAIL INSTALLED WILL BE PAID FOR AT THE CONTRACT PRICE PER LINEAL FOOT. PRICE BID FOR "CONCRETE OPEN RAILING, TL-4" SHALL BE FULL COMPENSATION FOR FURNISHING ALL MATERIAL, EXCLUDING REINFORCING STEEL, AND ALL OF THE EQUIPMENT AND LABOR REQUIRED TO CONSTRUCT THE RAIL IN ACCORDANCE WITH THESE PLANS AND CURRENT SPECIFICATIONS.

ALL OPEN RAIL REINFORCING STEEL IS TO BE INCLUDED WITH THE SUPERSTRUCTURE REINFORCING STEEL.

ALL OPEN RAIL CONCRETE IS TO BE CLASS C.

ALL BARRIER RAIL REINFORCING STEEL IS TO BE EITHER EPOXY COATED OR STAINLESS STEEL AS SHOWN OR NOTED. THE STAINLESS STEEL REINFORCING STEEL SHALL BE DEFORMED BAR GRADE 60 MEETING THE REQUIREMENTS OF MATERIALS I.M.452.

THE JOINT SEALER SHALL BE LIGHT GRAY NONSAG LATEX CAULKING SEALER MARKETED FOR OUTDOOR USE. NO TESTING OR CERTIFICATION IS REQUIRED.

TOP OF THE OPEN RAIL IS TO BE PARALLEL TO THEORETICAL ℄ GRADE.

IF CONDUIT IS REQUIRED IN THIS PLAN THE RIGID STEEL CONDUIT, JUNCTION BOXES AND FITTINGS INCLUDING LABOR AND ANY ADDITIONAL WORK TO DO THE INSTALLATION IS CONSIDERED INCIDENTAL TO THE COST OF THE RAILING.

CONCRETE PLACEMENT QUANTITIES

NOTE: THESE VALUES TO BE USED FOR ALL SKEWS.

BRIDGE LENGTH	70'-0	80'-0	90'-0	100'-0	110'-0	120'-0	130'-0	140'-0	150'-0
*STANDARD SECTION CU. YDS.	12.2	14.0	15.7	17.4	19.1	21.0	22.7	24.4	26.0
END SECTION 4 @ 0.687 CU. YDS.	2.8	2.8	2.8	2.8	2.8	2.8	2.8	2.8	2.8
TOTAL CU. YDS.	15.0	16.8	18.5	20.2	21.9	23.8	25.5	27.2	28.8

* CONCRETE QUANTITIES SHOWN ARE BASED ON 45° SKEW BID LENGTHS.

CONCRETE OPEN RAIL QUANTITIES

BRIDGE LENGTH		UNIT	70'-0	80'-0	90'-0	100'-0	110'-0	120'-0	130'-0	140'-0	150'-0
CONCRETE OPEN RAILING, TL-4	0° SKEW	L.F.	162.0	182.0	202.0	222.0	242.0	262.0	282.0	302.0	322.0
CONCRETE OPEN RAILING, TL-4	15° SKEW	L.F.	162.2	182.2	202.2	222.2	242.2	262.2	282.2	302.2	322.2
CONCRETE OPEN RAILING, TL-4	30° SKEW	L.F.	162.9	182.9	202.9	222.9	242.9	262.9	282.9	302.9	322.9
CONCRETE OPEN RAILING, TL-4	45° SKEW	L.F.	164.5	184.5	204.5	224.5	244.5	264.5	284.5	304.5	324.5

LATEST REVISION DATE

APPROVED BY BRIDGE ENGINEER

IOWA DOT Highway Division

STANDARD DESIGN - 40' ROADWAY, 3 SPAN BRIDGES

CONTINUOUS CONCRETE SLAB BRIDGES

JULY, 2014

OPEN RAIL DETAILS (TL-4)

J40-49-14

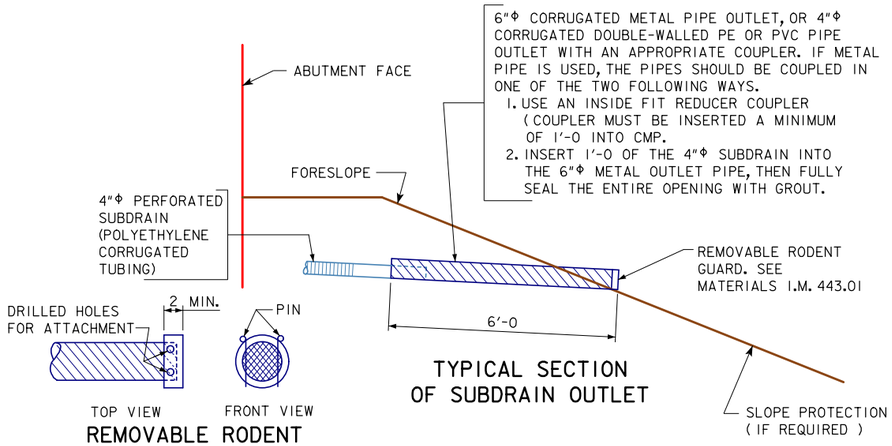

OUTLET DETAILS

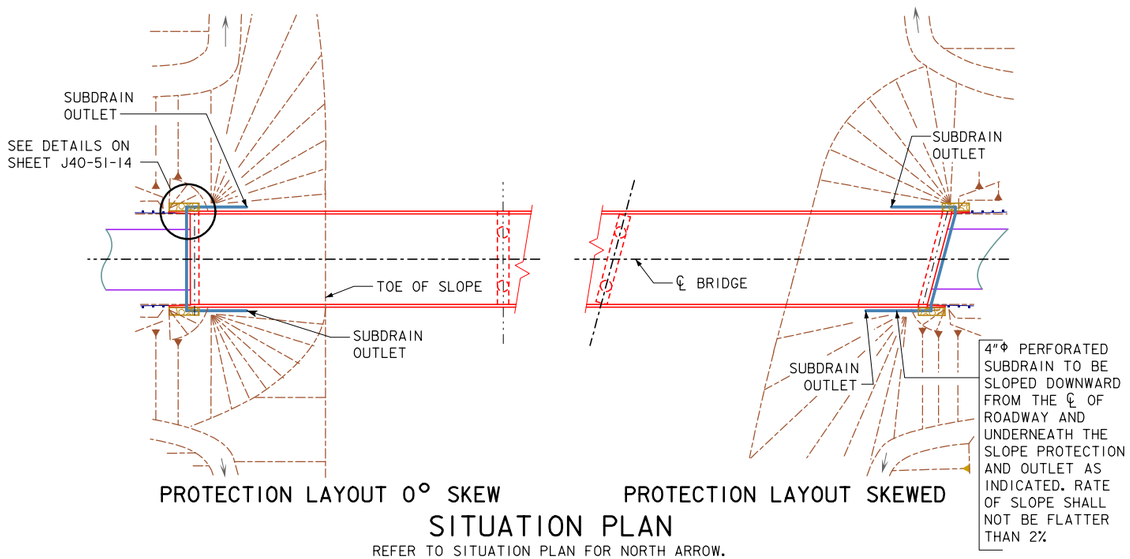

PROTECTION LAYOUT 0° SKEW

PROTECTION LAYOUT SKEWED

SITUATION PLAN

REFER TO SITUATION PLAN FOR NORTH ARROW.

REVISED 03-2016 - CHANGED REFERENCE TO THE J40-51-14 STANDARDS INSTEAD OF J40-51-06 STANDARDS.

03-2016
LATEST REVISION DATE

APPROVED BY BRIDGE ENGINEER

IOWA DOT Highway Division

STANDARD DESIGN - 40' ROADWAY, 3 SPAN BRIDGES

CONTINUOUS CONCRETE SLAB BRIDGES

JULY, 2014

SUBDRAIN DETAILS

J40-50-14

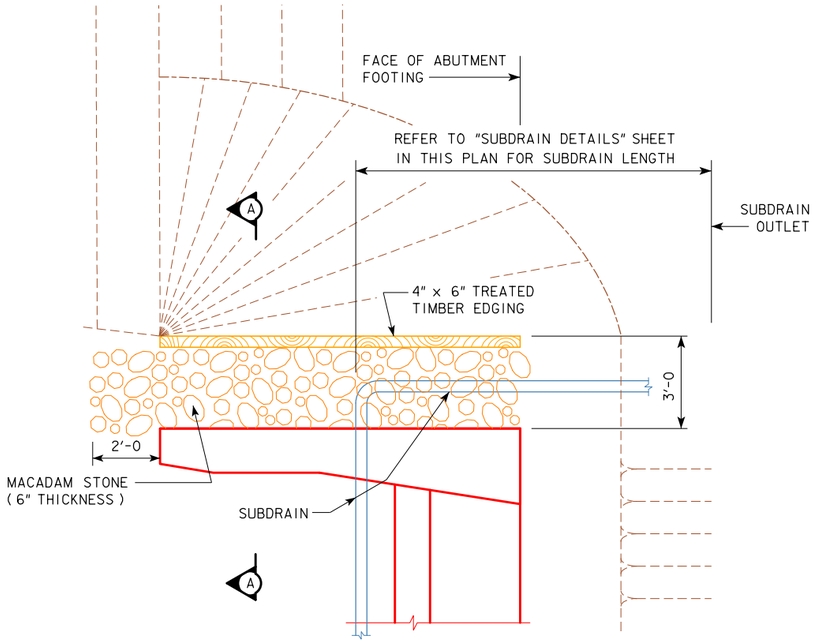

TOP VIEW OF WING ARMORING

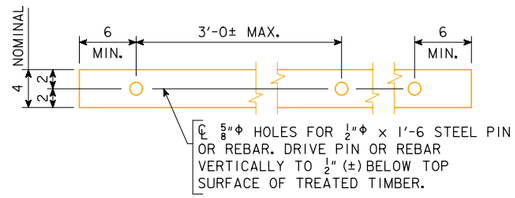

4" x 6" TREATED TIMBER EDGING DETAILS

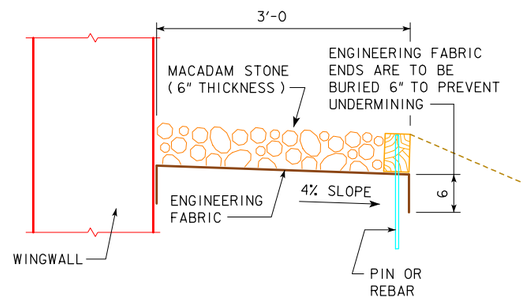

SECTION A-A

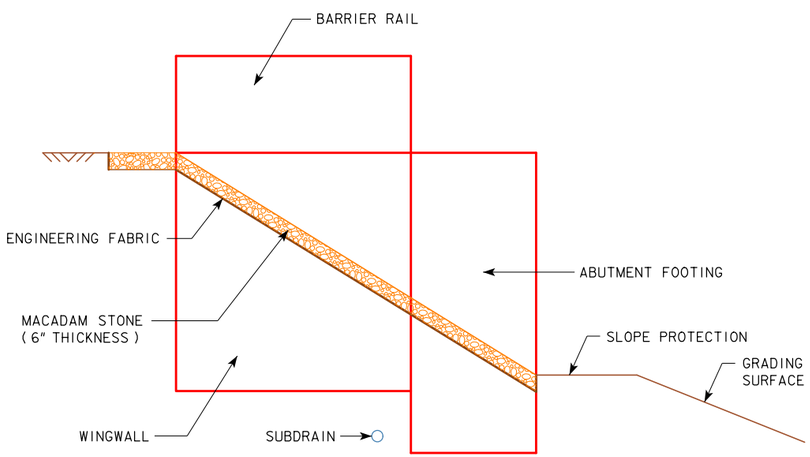

PROFILE VIEW OF WING ARMORING

SUBDRAIN NOTES:

SEE J40-50-14 AND "SITUATION PLAN" SHEETS FOR DETAILS OF PLACING ALL SUBDRAINS AND SUBDRAIN OUTLETS REQUIRED FOR THIS STRUCTURE.

THE BRIDGE CONTRACTOR IS TO INSTALL SUBDRAINS BEHIND THE ABUTMENT. THE SUBDRAINS SHALL BE 4" IN DIAMETER AND BE IN ACCORDANCE WITH ARTICLE 4143.01, B, OF THE STANDARD SPECIFICATIONS. THE SUBDRAIN OUTLET SHALL CONSIST OF A 6'-0 LENGTH OF PIPE WITH A REMOVABLE RODENT GUARD.

THE DIMENSIONS SHOWN FOR THE PROPOSED SUBDRAINS ARE BASED ON THE PROPOSED GRADING LAYOUT OF BRIDGE BERMS. THE DIMENSIONS SHOWN ARE FOR ESTIMATING ONLY. REQUIRED LENGTHS AND GENERAL LOCATIONS OF SUBDRAINS ARE SUBJECT TO CHANGE DUE TO FIELD ADJUSTMENTS OF THE GRADING LAYOUT.

THE COST OF FURNISHING AND PLACING SUBDRAIN (INCLUDING EXCAVATION), GRANULAR BACKFILL, POROUS BACKFILL, AND SUBDRAIN OUTLET IS TO BE INCLUDED IN THE PRICE BID FOR "STRUCTURAL CONCRETE (BRIDGE)". NO EXTRA PAYMENT WILL BE MADE.

MACADAM STONE WING ARMORING NOTES:

MACADAM STONE SHALL BE PLACED ALONG THE SIDE OF THE WING AND ABUTMENT FOOTING. THIS IS TYPICAL AT EACH CORNER OF THE BRIDGE UNLESS OTHERWISE NOTED IN THE PLANS. THE MACADAM STONE AT THESE LOCATIONS SHALL BE UNDERLAYED WITH ENGINEERING FABRIC AND BE IN ACCORDANCE WITH ARTICLE 4196.01, B, 3, OF THE STANDARD SPECIFICATIONS.

THE BRIDGE BERM FORESLOPE SHALL BE COMPACTED AND SHAPED AS SHOWN ON THESE PLANS, THE SITUATION PLAN AND AS DIRECTED BY THE ENGINEER. THE BERM FORESLOPE SHALL BE FIRM WHEN THE ENGINEERING FABRIC AND MACADAM STONE ARE PLACED.

THE ENGINEERING FABRIC SHALL BE IN ACCORDANCE WITH ARTICLE 4196.01, B, 3, OF THE STANDARD SPECIFICATIONS. IF THE ENGINEERING FABRIC IS LAPPED THE LAPS SHALL BE A MINIMUM OF ONE FOOT IN LENGTH, SHINGLE FASHION WITH UP SLOPE LAP PIECE ON TOP AND STAPLED FOR CONTINUITY.

THE MACADAM STONE SHALL BE IN ACCORDANCE WITH ARTICLE 4122.02, OF THE STANDARD SPECIFICATIONS FOR COARSE MATERIAL (NO CHOKE STONE IS ALLOWED).

WOOD PRESERVATIVE TREATMENT FOR THE TIMBER EDGING SHALL MEET THE REQUIREMENTS FOR GUARDRAIL POSTS, SAWED FOUR SIDES, AND BE IN ACCORDANCE WITH SECTION 4161, OF THE STANDARD SPECIFICATIONS.

THE MACADAM STONE SHALL BE DEPOSITED, SPREAD, CONSOLIDATED AND SHAPED BY MECHANICAL OR HAND METHODS THAT WILL PROVIDE UNIFORM DEPTH AND DENSITY AND PROVIDE UNIFORM SURFACE APPEARANCE.

PAYMENT FOR THE BRIDGE WING ARMORING SHALL BE INCIDENTAL TO THE BID ITEM "STRUCTURAL CONCRETE (BRIDGE)" AND SHALL INCLUDE COSTS OF ALL MATERIAL AND LABOR TO CONSTRUCT THE WING ARMORING AS SHOWN ON THESE PLANS.

LATEST REVISION DATE

APPROVED BY BRIDGE ENGINEER

IOWA DOT Highway Division

STANDARD DESIGN - 40' ROADWAY, 3 SPAN BRIDGES

CONTINUOUS CONCRETE SLAB BRIDGES

JULY, 2014

WING ARMORING DETAILS

J40-51-14

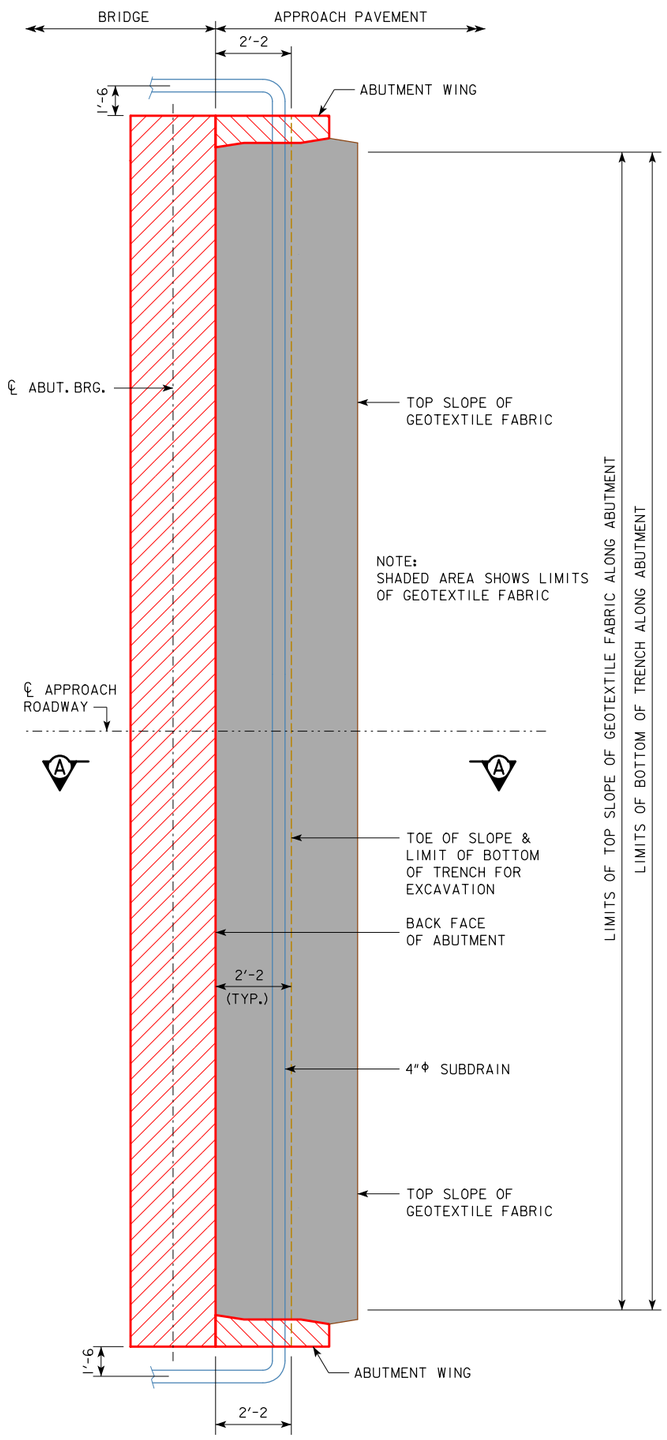

ABUTMENT PLAN

ABUTMENT BACKFILL PROCESS:

THE BASE OF THE EXCAVATION SUBGRADE BEHIND THE ABUTMENT IS TO BE GRADED WITH A 4% SLOPE AWAY FROM THE ABUTMENT FOOTING AND A 2% CROSS SLOPE IN THE DIRECTION OF THE SUBDRAIN OUTLET. THIS EXCAVATION SHAPING IS TO BE DONE PRIOR TO BEGINNING INSTALLATION OF THE GEOTEXTILE AND BACKFILL MATERIAL.

AFTER THE SUBGRADE HAS BEEN SHAPED, THE GEOTEXTILE FABRIC SHALL BE INSTALLED IN ACCORDANCE WITH THE DETAILS SHOWN. THE FABRIC IS INTENDED TO BE INSTALLED IN THE BASE OF THE EXCAVATION AND EXTENDED VERTICALLY UP THE ABUTMENT BACKWALL, ABUTMENT WING WALLS, AND EXCAVATION FACE TO A HEIGHT THAT WILL BE APPROXIMATELY 1 TO 2 FOOT HIGHER THAN THE HEIGHT OF THE POROUS BACKFILL PLACEMENT AS SHOWN IN THE "BACKFILL DETAILS" ON THIS SHEET. THE STRIPS OF THE FABRIC PLACED SHALL OVERLAP APPROXIMATELY 1 FOOT AND SHALL BE PINNED IN PLACE. THE FABRIC SHALL BE ATTACHED TO THE ABUTMENT BY USING LATH FOLDED IN THE FABRIC AND SECURED TO THE CONCRETE WITH SHALLOW CONCRETE NAILS. THE FABRIC PLACED AGAINST THE EXCAVATION FACE SHALL BE PINNED.

WHEN THE FABRIC IS IN PLACE, THE SUBDRAIN SHALL BE INSTALLED DIRECTLY ON THE FABRIC AT THE TOE OF THE REAR EXCAVATION SLOPE. A SLOT WILL NEED TO BE CUT IN THE FABRIC AT THE POINT WHERE THE SUBDRAIN EXITS THE FABRIC NEAR THE END OF THE ABUTMENT WING WALL.

POROUS BACKFILL IS THEN PLACED AND LEVELED, NO COMPACTION IS REQUIRED.

THE REMAINING WORK INVOLVES BACKFILLING WITH FLOODABLE BACKFILL, SURFACE FLOODING, AND VIBRATORY COMPACTION. THE FLOODABLE BACKFILL MATERIAL SHALL BE IN ACCORDANCE WITH THE STANDARD SPECIFICATIONS. THE FLOODABLE BACKFILL SHALL BE PLACED IN INDIVIDUAL LIFTS, SURFACE FLOODED, AND COMPACTED WITH VIBRATORY COMPACTION TO ENSURE FULL CONSOLIDATION. LIMIT THE LOOSE LIFTS TO NO MORE THAN 2 FEET OF THICKNESS.

START SURFACE FLOODING FOR EACH FLOODABLE BACKFILL LIFT AT THE HIGH POINT OF THE SUBDRAIN AND PROGRESS TO THE LOW POINT WHERE THE SUBDRAIN EXITS THE FABRIC. TO ENSURE UNIFORM SURFACE FLOODING, WATER RUNNING FULL IN A 2-INCH DIAMETER HOSE SHOULD BE SPRAYED IN SUCCESSIVE 6-FOOT TO 8-FOOT INCREMENTS FOR 3 MINUTES WITHIN EACH INCREMENT.

FLOODABLE BACKFILL LIFT PLACEMENT, FLOODING, AND COMPACTION SHALL PROGRESS UNTIL THE REQUIRED FULL THICKNESS OF THE ABUTMENT BACKFILL HAS BEEN COMPLETED.

WATER REQUIRED FOR FLOODING, SUBDRAINS, POROUS BACKFILL, FLOODABLE BACKFILL, AND GEOTEXTILE FABRIC FURNISHED AT THE BRIDGE ABUTMENTS WILL NOT BE MEASURED SEPARATELY FOR PAYMENT.

THE COST OF WATER REQUIRED FOR FLOODING, SUBDRAINS, POROUS BACKFILL, FLOODABLE BACKFILL, AND GEOTEXTILE FABRIC FURNISHED AT THE BRIDGE ABUTMENTS SHALL BE INCLUDED IN THE CONTRACT UNIT PRICE BID FOR STRUCTURAL CONCRETE.

NOTE:
SEE SUBDRAIN DETAILS SHEET FOR DETAILS NOT SHOWN ON THIS SHEET WHICH ARE PERTINENT TO THIS STRUCTURE.

NOTE:

SUBDRAIN SHALL SLOPE DOWNWARD 2% FROM ℄ APPROACH ROADWAY WHEN OUTLETTING BOTH SIDES OF THE ABUTMENT.

SUBDRAIN SHALL SLOPE DOWNWARD 2% FROM HIGH END WHEN OUTLETTING AT ONE END OF THE ABUTMENT.

THE GEOTEXTILE FABRIC SHALL BE IN ACCORDANCE WITH ARTICLE 4196.01, B, 6 OF THE STANDARD SPECIFICATIONS. IF THE ENGINEERING FABRIC IS LAPPED THE LAPS SHALL BE A MINIMUM OF ONE FOOT IN LENGTH, SHINGLE FASHION WITH UP SLOPE LAP PIECE ON TOP AND STAPLED FOR CONTINUITY.

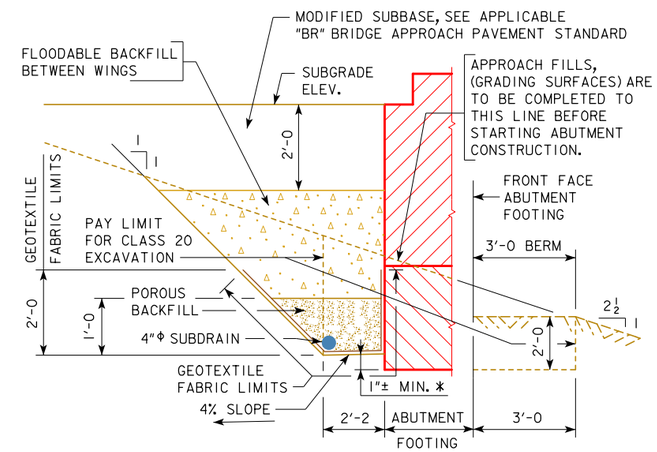

SECTION A-A

BACKFILL DETAILS

NOTE: GEOTEXTILE FABRIC WILL BE ATTACHED TO FACE OF ABUTMENT FOOTING AND WINGS.

* DIMENSION VARIES DUE TO 2% SUBDRAIN SLOPE.

09-2016
LATEST REVISION DATE

APPROVED BY BRIDGE ENGINEER

IOWA DOT Highway Division

STANDARD DESIGN - 40' ROADWAY, 3 SPAN BRIDGES

CONTINUOUS CONCRETE SLAB BRIDGES

JULY, 2014

ABUTMENT BACKFILL DETAILS

FOR 0° SKEWS

J40-52-14

REVISED 09-14 - THE TECHNICAL DATA INFORMATION TABLE WAS REMOVED AND A NOTE ADDED TO REFER TO THE STANDARDS SPECIFICATIONS FOR THIS INFORMATION.
REVISED 09-2016 - CHANGED THE BRIDGE APPROACH PAVEMENT STANDARD TO "BR" (WAS "RK-20").

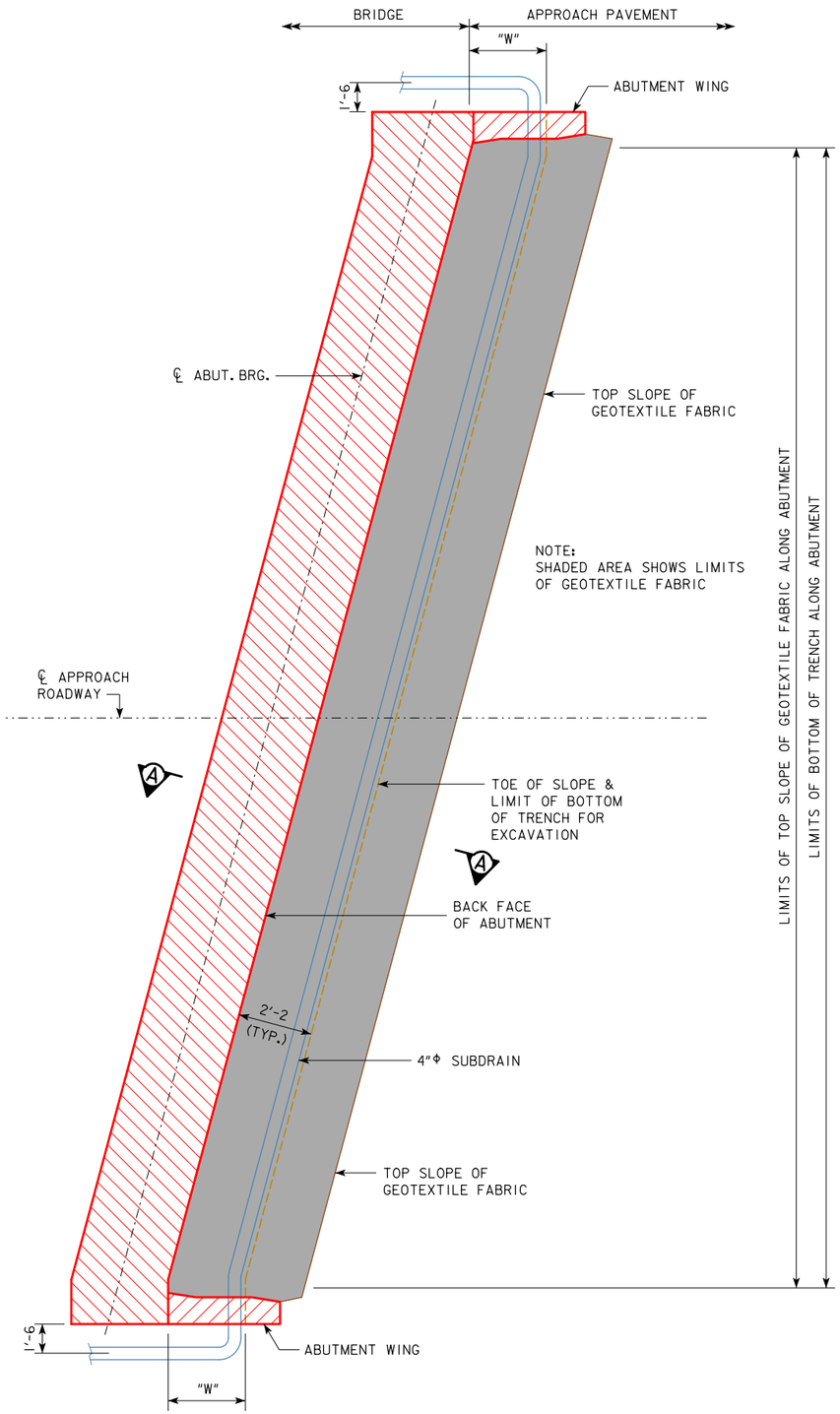

ABUTMENT PLAN WITHOUT WING EXTENSIONS

"W" DIMENSION	
SKEW	DIMENSION
15°	2'-2 7/8
30°	2'-6
45°	3'-0 3/4

ABUTMENT BACKFILL PROCESS:

THE BASE OF THE EXCAVATION SUBGRADE BEHIND THE ABUTMENT IS TO BE GRADED WITH A 4% SLOPE AWAY FROM THE ABUTMENT FOOTING AND A 2% CROSS SLOPE IN THE DIRECTION OF THE SUBDRAIN OUTLET. THIS EXCAVATION SHAPING IS TO BE DONE PRIOR TO BEGINNING INSTALLATION OF THE GEOTEXTILE AND BACKFILL MATERIAL.

AFTER THE SUBGRADE HAS BEEN SHAPED, THE GEOTEXTILE FABRIC SHALL BE INSTALLED IN ACCORDANCE WITH THE DETAILS SHOWN. THE FABRIC IS INTENDED TO BE INSTALLED IN THE BASE OF THE EXCAVATION AND EXTENDED VERTICALLY UP THE ABUTMENT BACKWALL, ABUTMENT WING WALLS, AND EXCAVATION FACE TO A HEIGHT THAT WILL BE APPROXIMATELY 1 TO 2 FOOT HIGHER THAN THE HEIGHT OF THE POROUS BACKFILL PLACEMENT AS SHOWN IN THE "BACKFILL DETAILS" ON THIS SHEET. THE STRIPS OF THE FABRIC PLACED SHALL OVERLAP APPROXIMATELY 1 FOOT AND SHALL BE PINNED IN PLACE. THE FABRIC SHALL BE ATTACHED TO THE ABUTMENT BY USING LATH FOLDED IN THE FABRIC AND SECURED TO THE CONCRETE WITH SHALLOW CONCRETE NAILS. THE FABRIC PLACED AGAINST THE EXCAVATION FACE SHALL BE PINNED.

WHEN THE FABRIC IS IN PLACE, THE SUBDRAIN SHALL BE INSTALLED DIRECTLY ON THE FABRIC AT THE TOE OF THE REAR EXCAVATION SLOPE. A SLOT WILL NEED TO BE CUT IN THE FABRIC AT THE POINT WHERE THE SUBDRAIN EXITS THE FABRIC NEAR THE END OF THE ABUTMENT WING WALL.

POROUS BACKFILL IS THEN PLACED AND LEVELED, NO COMPACTION IS REQUIRED.

THE REMAINING WORK INVOLVES BACKFILLING WITH FLOODABLE BACKFILL, SURFACE FLOODING, AND VIBRATORY COMPACTION. THE FLOODABLE BACKFILL MATERIAL SHALL BE IN ACCORDANCE WITH THE STANDARD SPECIFICATIONS. THE FLOODABLE BACKFILL SHALL BE PLACED IN INDIVIDUAL LIFTS, SURFACE FLOODED, AND COMPACTED WITH VIBRATORY COMPACTION TO ENSURE FULL CONSOLIDATION. LIMIT THE LOOSE LIFTS TO NO MORE THAN 2 FEET OF THICKNESS.

START SURFACE FLOODING FOR EACH FLOODABLE BACKFILL LIFT AT THE HIGH POINT OF THE SUBDRAIN AND PROGRESS TO THE LOW POINT WHERE THE SUBDRAIN EXITS THE FABRIC. TO ENSURE UNIFORM SURFACE FLOODING, WATER RUNNING FULL IN A 2-INCH DIAMETER HOSE SHOULD BE SPRAYED IN SUCCESSIVE 6-FOOT TO 8-FOOT INCREMENTS FOR 3 MINUTES WITHIN EACH INCREMENT.

FLOODABLE BACKFILL LIFT PLACEMENT, FLOODING, AND COMPACTION SHALL PROGRESS UNTIL THE REQUIRED FULL THICKNESS OF THE ABUTMENT BACKFILL HAS BEEN COMPLETED.

WATER REQUIRED FOR FLOODING, SUBDRAINS, POROUS BACKFILL, FLOODABLE BACKFILL, AND GEOTEXTILE FABRIC FURNISHED AT THE BRIDGE ABUTMENTS WILL NOT BE MEASURED SEPARATELY FOR PAYMENT.

THE COST OF WATER REQUIRED FOR FLOODING, SUBDRAINS, POROUS BACKFILL, FLOODABLE BACKFILL, AND GEOTEXTILE FABRIC FURNISHED AT THE BRIDGE ABUTMENTS SHALL BE INCLUDED IN THE CONTRACT UNIT PRICE BID FOR STRUCTURAL CONCRETE.

NOTE:
SEE SUBDRAIN DETAILS SHEET FOR DETAILS NOT SHOWN ON THIS SHEET WHICH ARE PERTINENT TO THIS STRUCTURE.

NOTE:

SUBDRAIN SHALL SLOPE DOWNWARD 2% FROM ℄ APPROACH ROADWAY WHEN OUTLETTING BOTH SIDES OF THE ABUTMENT.

SUBDRAIN SHALL SLOPE DOWNWARD 2% FROM HIGH END WHEN OUTLETTING AT ONE END OF THE ABUTMENT.

THE GEOTEXTILE FABRIC SHALL BE IN ACCORDANCE WITH ARTICLE 4196.01, B, 6 OF THE STANDARD SPECIFICATIONS. IF THE ENGINEERING FABRIC IS LAPPED THE LAPS SHALL BE A MINIMUM OF ONE FOOT IN LENGTH, SHINGLE FASHION WITH UP SLOPE LAP PIECE ON TOP AND STAPLED FOR CONTINUITY.

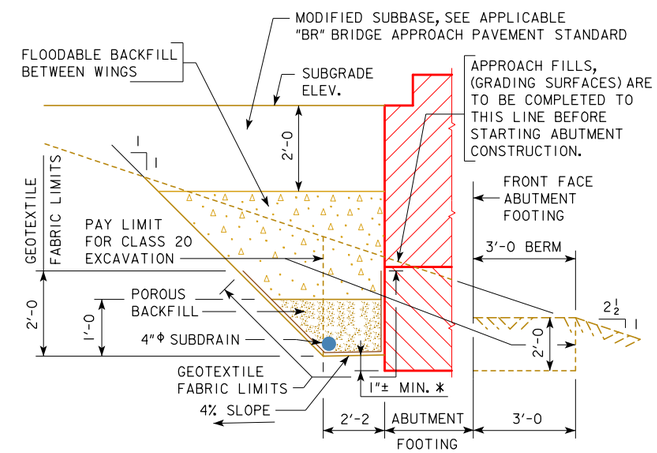

SECTION A-A

BACKFILL DETAILS

NOTE: GEOTEXTILE FABRIC WILL BE ATTACHED TO FACE OF ABUTMENT FOOTING AND WINGS.

* DIMENSION VARIES DUE TO 2% SUBDRAIN SLOPE.

09-2016
LATEST REVISION DATE

APPROVED BY BRIDGE ENGINEER

IOWA DOT Highway Division

STANDARD DESIGN - 40' ROADWAY, 3 SPAN BRIDGES

CONTINUOUS CONCRETE SLAB BRIDGES

JULY, 2014

ABUTMENT BACKFILL DETAILS

FOR 15°, 30°, & 45° SKEWS

J40-53-14

REVISED 09-14 - THE TECHNICAL DATA INFORMATION TABLE WAS REMOVED AND A NOTE ADDED TO REFER TO THE STANDARDS SPECIFICATIONS FOR THIS INFORMATION.
REVISED 09-2016 - CHANGED THE BRIDGE APPROACH PAVEMENT STANDARD TO "BR" (WAS "RK-20").