IOWA DOT
Highway Division

RS40–14 THREE SPAN ROLLED STEEL BEAM BRIDGE STANDARDS

INDEX FOR RS40-14 STANDARDS:

RS40-000-14 TITLE SHT.
RS40-001-14 INDEX FOR RS40-14 STANDARDS
RS40-002-14 GENERAL NOTES SHT. 1 OF 2
RS40-003-14 GENERAL NOTES SHT. 2 OF 2
RS40-004-14 SUBSTRUCTURE LAYOUTS
RS40-005-14 SUBSTRUCTURE LAYOUTS
RS40-006-14 SUBSTRUCTURE LAYOUTS
RS40-007-14 ABUTMENT DETAILS 0° SKEW
RS40-008-14 ABUTMENT DETAILS 0° SKEW
RS40-009-14 ABUTMENT DETAILS 10° SKEW
RS40-010-14 ABUTMENT DETAILS 10° SKEW
RS40-011-14 ABUTMENT DETAILS 20° SKEW
RS40-012-14 ABUTMENT DETAILS 20° SKEW
RS40-013-14 ABUTMENT DETAILS 30° SKEW
RS40-014-14 ABUTMENT DETAILS 30° SKEW
RS40-015-14 ABUTMENT DETAILS 45° SKEW
RS40-016-14 ABUTMENT DETAILS 45° SKEW
RS40-017-14 SYMMETRICAL CROSS SECTIONS 160'-0 - 340'-0 SPANS
RS40-018-14 UNSYMMETRICAL CROSS SECTIONS 160'-0 - 340'-0 SPANS
RS40-019-14 LONGITUDINAL SECTION 0° SKEW
RS40-020-14 LONGITUDINAL SECTION 0° SKEW
RS40-021-14 LONGITUDINAL SECTION 10° SKEW
RS40-022-14 LONGITUDINAL SECTION 10° SKEW
RS40-023-14 LONGITUDINAL SECTION 20° SKEW
RS40-024-14 LONGITUDINAL SECTION 20° SKEW
RS40-025-14 LONGITUDINAL SECTION 30° SKEW
RS40-026-14 LONGITUDINAL SECTION 30° SKEW
RS40-027-14 LONGITUDINAL SECTION 45° SKEW
RS40-028-14 LONGITUDINAL SECTION 45° SKEW
RS40-029-14 ABUTMENT WING DETAILS BRIDGES 160'-0 - 320'-0
RS40-030-14 ABUTMENT WING DETAILS BRIDGE 340'-0
RS40-031-14 SUPERSTRUCTURE QUANTITIES 0° SKEW
RS40-032-14 SUPERSTRUCTURE QUANTITIES 10° SKEW
RS40-033-14 SUPERSTRUCTURE QUANTITIES 20° SKEW
RS40-034-14 SUPERSTRUCTURE QUANTITIES 30° SKEW
RS40-035-14 SUPERSTRUCTURE QUANTITIES 45° SKEW
RS40-036-14 DECK AND ABUTMENT REINFORCEMENT 0° SKEW
RS40-037-14 DECK AND ABUTMENT REINFORCEMENT 10° SKEW
RS40-038-14 DECK AND ABUTMENT REINFORCEMENT 20° SKEW
RS40-039-14 DECK AND ABUTMENT REINFORCEMENT 30° SKEW
RS40-040-14 DECK AND ABUTMENT REINFORCEMENT 45° SKEW
RS40-041-14 FRAMING PLAN 160'-0 BRIDGE
RS40-042-14 FRAMING PLAN 160'-0 BRIDGE
RS40-043-14 FRAMING PLAN 180'-0 BRIDGE
RS40-044-14 FRAMING PLAN 180'-0 BRIDGE
RS40-045-14 FRAMING PLAN 200'-0 BRIDGE
RS40-046-14 FRAMING PLAN 200'-0 BRIDGE
RS40-047-14 FRAMING PLAN 220'-0 BRIDGE
RS40-048-14 FRAMING PLAN 220'-0 BRIDGE

INDEX FOR RS40-14 STANDARDS:

RS40-049-14 FRAMING PLAN 240'-0 BRIDGE
RS40-050-14 FRAMING PLAN 240'-0 BRIDGE
RS40-051-14 FRAMING PLAN 260'-0 BRIDGE
RS40-052-14 FRAMING PLAN 260'-0 BRIDGE
RS40-053-14 FRAMING PLAN 280'-0 BRIDGE
RS40-054-14 FRAMING PLAN 280'-0 BRIDGE
RS40-055-14 FRAMING PLAN 300'-0 BRIDGE
RS40-056-14 FRAMING PLAN 300'-0 BRIDGE
RS40-057-14 FRAMING PLAN 320'-0 BRIDGE
RS40-058-14 FRAMING PLAN 320'-0 BRIDGE
RS40-059-14 FRAMING PLAN 340'-0 BRIDGE
RS40-060-14 FRAMING PLAN 340'-0 BRIDGE
RS40-061-14 BEAM DEFLECTIONS 160'-0 BRIDGE
RS40-062-14 BEAM DEFLECTIONS 180'-0 BRIDGE
RS40-063-14 BEAM DEFLECTIONS 200'-0 BRIDGE
RS40-064-14 BEAM DEFLECTIONS 220'-0 BRIDGE
RS40-065-14 BEAM DEFLECTIONS 240'-0 BRIDGE
RS40-066-14 BEAM DEFLECTIONS 260'-0 BRIDGE
RS40-067-14 BEAM DEFLECTIONS 280'-0 BRIDGE
RS40-068-14 BEAM DEFLECTIONS 300'-0 BRIDGE
RS40-069-14 BEAM DEFLECTIONS 320'-0 BRIDGE
RS40-070-14 BEAM DEFLECTIONS 340'-0 BRIDGE
RS40-071-14 BEAM PLAN AND ELEVATION 160'-0 BRIDGE
RS40-072-14 BEAM PLAN AND ELEVATION 180'-0 BRIDGE
RS40-073-14 BEAM PLAN AND ELEVATION 200'-0 BRIDGE
RS40-074-14 BEAM PLAN AND ELEVATION 220'-0 BRIDGE
RS40-075-14 BEAM PLAN AND ELEVATION 240'-0 BRIDGE
RS40-076-14 BEAM PLAN AND ELEVATION 260'-0 BRIDGE
RS40-077-14 BEAM PLAN AND ELEVATION 280'-0 BRIDGE
RS40-078-14 BEAM PLAN AND ELEVATION 300'-0 BRIDGE
RS40-079-14 BEAM PLAN AND ELEVATION 320'-0 BRIDGE
RS40-080-14 BEAM PLAN AND ELEVATION 340'-0 BRIDGE
RS40-081-14 DIAPHRAGM DETAILS SHT. 1
RS40-082-14 DIAPHRAGM DETAILS SHT. 2
RS40-083-14 FLANGE DEFLECTOR DETAILS
RS40-084-14 BOLTED FIELD SPLICE DETAILS SHT. 1
RS40-085-14 BOLTED FIELD SPLICE DETAILS SHT. 2
RS40-086-14 BOLTED FIELD SPLICE DETAILS SHT. 3
RS40-087-14 BARRIER RAIL DETAILS SHT. 1
RS40-088-14 BARRIER RAIL DETAILS SHT. 2
RS40-089-14 BARRIER RAIL DETAILS SHT. 3
RS40-090-14 BARRIER RAIL DETAILS SHT. 4
RS40-091-14 JUNCTION BOX AND CONDUIT DETAILS SHT. 1
RS40-092-14 JUNCTION BOX AND CONDUIT DETAILS SHT. 2
RS40-093-14 PIER BEARING DETAILS 160' TO 200' SPAN
RS40-094-14 PIER BEARING DETAILS 220' TO 260' SPAN
RS40-095-14 PIER BEARING DETAILS 280' TO 340' SPAN
RS40-096-14 PILE BENT PIERS - 0° SKEW
RS40-097-14 PILE BENT PIERS - 0° SKEW
RS40-098-14 PILE BENT PIERS HP14 PILES - 0° SKEW
RS40-099-14 PILE BENT PIERS HP14 PILES - 0° SKEW
RS40-140-14 PILE BENT PIERS - 10° SKEW
RS40-141-14 PILE BENT PIERS - 10° SKEW
RS40-142-14 PILE BENT PIERS HP14 PILES - 10° SKEW
RS40-143-14 PILE BENT PIERS HP14 PILES - 10° SKEW
RS40-144-14 PILE BENT PIERS - 20° SKEW
RS40-145-14 PILE BENT PIERS - 20° SKEW
RS40-146-14 PILE BENT PIERS HP14 PILES - 20° SKEW
RS40-147-14 PILE BENT PIERS HP14 PILES - 20° SKEW
RS40-148-14 PILE BENT PIERS - 30° SKEW
RS40-149-14 PILE BENT PIERS - 30° SKEW
RS40-110-14 PILE BENT PIERS HP14 PILES - 30° SKEW
RS40-111-14 PILE BENT PIERS HP14 PILES - 30° SKEW
RS40-112-14 PILE BENT PIERS - 45° SKEW
RS40-113-14 PILE BENT PIERS - 45° SKEW
RS40-114-14 PILE BENT PIERS HP14 PILES - 45° SKEW
RS40-115-14 PILE BENT PIERS HP14 PILES - 45° SKEW
RS40-116-14 TEE PIER 0° SKEW, CAP & COLUMN DETAILS
RS40-117-14 TEE PIER 0° SKEW, CAP & COLUMN DETAILS
RS40-118-14 TEE PIER HP10x57 SRL-1, 0° SKEW, STEEL PILE FOOTINGS SHT. 1
RS40-119-14 TEE PIER HP10x57 SRL-1, 0° SKEW, STEEL PILE FOOTINGS SHT. 2
RS40-120-14 TEE PIER HP10x57 SRL-1, 0° SKEW, STEEL PILE FOOTINGS SHT. 3
RS40-121-14 TEE PIER HP10x57 SRL-2, 0° SKEW, STEEL PILE FOOTINGS SHT. 1
RS40-122-14 TEE PIER HP10x57 SRL-2, 0° SKEW, STEEL PILE FOOTINGS SHT. 2
RS40-123-14 TEE PIER HP10x57 SRL-2, 0° SKEW, STEEL PILE FOOTINGS SHT. 3
RS40-124-14 TEE PIER 0° SKEW, SPREAD FOOTING SHT. 1
RS40-125-14 TEE PIER 0° SKEW, SPREAD FOOTING SHT. 2
RS40-126-14 TEE PIER 10° SKEW, CAP & COLUMN DETAILS
RS40-127-14 TEE PIER 10° SKEW, CAP & COLUMN DETAILS
RS40-128-14 TEE PIER HP10x57 SRL-1, 10° SKEW, STEEL PILE FOOTINGS SHT. 1
RS40-129-14 TEE PIER HP10x57 SRL-1, 10° SKEW, STEEL PILE FOOTINGS SHT. 2
RS40-130-14 TEE PIER HP10x57 SRL-1, 10° SKEW, STEEL PILE FOOTINGS SHT. 3
RS40-131-14 TEE PIER HP10x57 SRL-2, 10° SKEW, STEEL PILE FOOTINGS SHT. 1
RS40-132-14 TEE PIER HP10x57 SRL-2, 10° SKEW, STEEL PILE FOOTINGS SHT. 2
RS40-133-14 TEE PIER HP10x57 SRL-2, 10° SKEW, STEEL PILE FOOTINGS SHT. 3
RS40-134-14 TEE PIER 10° SKEW, SPREAD FOOTING SHT. 1
RS40-135-14 TEE PIER 10° SKEW, SPREAD FOOTING SHT. 2
RS40-136-14 TEE PIER 20° SKEW, CAP & COLUMN DETAILS
RS40-137-14 TEE PIER 20° SKEW, CAP & COLUMN DETAILS
RS40-138-14 TEE PIER HP10x57 SRL-1, 20° SKEW, STEEL PILE FOOTINGS SHT. 1
RS40-139-14 TEE PIER HP10x57 SRL-1, 20° SKEW, STEEL PILE FOOTINGS SHT. 2
RS40-140-14 TEE PIER HP10x57 SRL-1, 20° SKEW, STEEL PILE FOOTINGS SHT. 3
RS40-141-14 TEE PIER HP10x57 SRL-2, 20° SKEW, STEEL PILE FOOTINGS SHT. 1
RS40-142-14 TEE PIER HP10x57 SRL-2, 20° SKEW, STEEL PILE FOOTINGS SHT. 2
RS40-143-14 TEE PIER HP10x57 SRL-2, 20° SKEW, STEEL PILE FOOTINGS SHT. 3
RS40-144-14 TEE PIER 20° SKEW, SPREAD FOOTING SHT. 1
RS40-145-14 TEE PIER 20° SKEW, SPREAD FOOTING SHT. 2
RS40-146-14 TEE PIER 30° SKEW, CAP & COLUMN DETAILS
RS40-147-14 TEE PIER 30° SKEW, CAP & COLUMN DETAILS
RS40-148-14 TEE PIER HP10x57 SRL-1, 30° SKEW, STEEL PILE FOOTINGS SHT. 1
RS40-149-14 TEE PIER HP10x57 SRL-1, 30° SKEW, STEEL PILE FOOTINGS SHT. 2
RS40-150-14 TEE PIER HP10x57 SRL-1, 30° SKEW, STEEL PILE FOOTINGS SHT. 3
RS40-151-14 TEE PIER HP10x57 SRL-2, 30° SKEW, STEEL PILE FOOTINGS SHT. 1
RS40-152-14 TEE PIER HP10x57 SRL-2, 30° SKEW, STEEL PILE FOOTINGS SHT. 2
RS40-153-14 TEE PIER HP10x57 SRL-2, 30° SKEW, STEEL PILE FOOTINGS SHT. 3
RS40-154-14 TEE PIER 30° SKEW, SPREAD FOOTING SHT. 1
RS40-155-14 TEE PIER 30° SKEW, SPREAD FOOTING SHT. 2
RS40-156-14 TEE PIER 45° SKEW, CAP & COLUMN DETAILS
RS40-157-14 TEE PIER 45° SKEW, CAP & COLUMN DETAILS
RS40-158-14 TEE PIER HP10x57 SRL-1, 45° SKEW, STEEL PILE FOOTINGS SHT. 1
RS40-159-14 TEE PIER HP10x57 SRL-1, 45° SKEW, STEEL PILE FOOTINGS SHT. 2
RS40-160-14 TEE PIER HP10x57 SRL-1, 45° SKEW, STEEL PILE FOOTINGS SHT. 3
RS40-161-14 TEE PIER HP10x57 SRL-2, 45° SKEW, STEEL PILE FOOTINGS SHT. 1
RS40-162-14 TEE PIER HP10x57 SRL-2, 45° SKEW, STEEL PILE FOOTINGS SHT. 2
RS40-163-14 TEE PIER HP10x57 SRL-2, 45° SKEW, STEEL PILE FOOTINGS SHT. 3
RS40-164-14 TEE PIER 45° SKEW, SPREAD FOOTING SHT. 1
RS40-165-14 TEE PIER 45° SKEW, SPREAD FOOTING SHT. 2
RS40-166-14 ADDITIONAL PIER QUANTITIES, 10° SKEW
RS40-167-14 ADDITIONAL PIER QUANTITIES, 20° SKEW
RS40-168-14 ADDITIONAL PIER QUANTITIES, 30° SKEW
RS40-169-14 ADDITIONAL PIER QUANTITIES, 45° SKEW
RS40-170-14 SUBDRAIN DETAILS
RS40-171-14 WING ARMORING DETAILS
RS40-172-14 WING ARMORING DETAILS
RS40-173-14 ABUTMENT BACKFILL DETAILS, 0° SKEW
RS40-174-14 ABUTMENT BACKFILL DETAILS, 0° SKEW
RS40-175-14 ABUTMENT BACKFILL DETAILS, SKEWED
RS40-176-14 ABUTMENT BACKFILL DETAILS, SKEWED

LATEST REVISION DATE

APPROVED BY BRIDGE ENGINEER

IOWA DOT Highway Division

STANDARD DESIGN - 40' ROADWAY, 3 SPAN BRIDGES

ROLLED STEEL BEAM BRIDGES

OCTOBER, 2014

INDEX FOR RS40-14 STANDARDS

RS40-001-14

GENERAL NOTES:

THE RS40-14 BRIDGE STANDARDS, IF PROPERLY USED, PROVIDE THE STRUCTURAL PLANS NECESSARY TO CONSTRUCT CONTINUOUS 40' ROADWAY STEEL ROLLED BEAM BRIDGES WITH LENGTHS OF 160'-0, 180'-0, 200'-0, 220'-0, 240'-0, 260'-0, 280'-0, 300'-0, 320'-0 AND 340'-0.

ALL BRIDGES MAY BE BUILT ON A 0°, 10°, 20°, 30° OR 45° SKEW. WHERE A SINGLE SKEW IS SHOWN, IT IS USUALLY SHOWN AS RIGHT AHEAD. UNLESS NOTED OTHERWISE, ALL DIMENSIONS AND DETAILS SHOWN FOR A GIVEN SKEW APPLY TO THE OPPOSITE SKEW.

THE INTEGRAL ABUTMENT DESIGN UTILIZED ON THESE BRIDGES RESTRICTS THEIR USE IN THE FOLLOWING MANNER :

(1) STEEL H PILES SHALL BE USED AT THE ABUTMENTS AND PIERS. H PILES MAY BE DRIVEN AS FRICTION OR POINT BEARING PILES.

(2) THESE BRIDGES ARE NOT TO BE USED WHEN POINT BEARING FOR THE ABUTMENT STEEL PILING WOULD BE OBTAINED ON ROCK AT A DISTANCE LESS THAN 12 FEET FROM THE BOTTOM OF FOOTING.

(3) THE ABUTMENT PILING FOR ALL BRIDGES ARE TO BE DRIVEN THROUGH OVERSIZE HOLES PREBORED TO A MINIMUM OF 10 FEET BELOW THE BOTTOM OF FOOTING. THE PREBORED HOLES SHALL BE IN ACCORDANCE WITH SECTION 2501.03, Q OF THE STANDARD SPECIFICATIONS. THE ELEVATION OF THE BOTTOM OF THE PREBORED HOLE SHALL BE SHOWN ON THE PLANS.

CLASS 20 EXCAVATION WILL BE REQUIRED TO CONSTRUCT THE INTEGRAL ABUTMENTS AND CLASS 20 & 21 EXCAVATION WILL BE REQUIRED TO CONSTRUCT TEE PIERS. THE QUANTITIES FOR CLASS 20 AND 21 ARE NOT INCLUDED ON THESE SHEETS, BUT SHALL BE CALCULATED AND INCLUDED IN THE FINAL PLANS.

FOR PIERS SUBJECT TO SCOUR THE DESIGN BEARING SHALL BE OBTAINED BELOW SCOUR ELEVATION. SCOUR ELEVATION SHALL BE SHOWN ON THE SITUATION PLAN SHEET.

ABUTMENT STEP HEIGHTS DEPEND ON PROFILE GRADE FOR BRIDGES AND SHALL BE SET BY FINAL DESIGNER.

FOR THE NON-SYMMETRICAL CROSS-SECTION OPTION THE DESIGNER SHALL PROVIDE A STAKING DIAGRAM.

KEYWAY DIMENSIONS SHOWN ON THE PLANS ARE BASED ON NOMINAL DIMENSIONS UNLESS STATED OTHERWISE. IN ADDITION, THE BEVEL USED ON THE KEYWAY SHALL BE LIMITED TO A MAXIMUM OF 10 DEGREES FROM VERTICAL.

3" WING PVC PIPE IS INCIDENTAL TO STRUCTURAL CONCRETE.

THE INTEGRAL ABUTMENTS, PILE BENTS, AND TEE PIERS FOR THESE RS40 STANDARDS HAVE BEEN DESIGNED FOR THE USE OF VARIOUS TYPES OF PILE FOOTINGS OR SPREAD FOOTINGS AS FOLLOWS.

- INTEGRAL ABUTMENTS: HP10x57 PILES REFER TO BRIDGE DESIGN MANUAL (BDM) ARTICLE 6.2.6.1 STRUCTURAL RESISTANCE LEVEL-1 (SRL-1)
- PILE BENTS: STANDARD CONCRETE-FILLED STEEL PIPE PILES (PIOL), STANDARD PRESTRESSED CONCRETE PILES (PIOL), OR STANDARD H-PILES (PIOL AND SRL-1)
- TEE PIERS: HP10x57 PILES AT BRIDGE DESIGN MANUAL (BDM) ARTICLE 6.2.6.1 STRUCTURAL RESISTANCE LEVEL-1 OR 2 (SRL-1 OR SRL-2) OR SPREAD FOOTINGS

STRUCTURAL RESISTANCE LEVEL-1 (SRL-1) REPLACES THE 50 TON STEEL PILE DESIGNATION.

STRUCTURAL RESISTANCE LEVEL 2 (SRL-2) REPLACES THE 75 TON STEEL PILE DESIGNATION.

FOR MORE INFORMATION ON SRL-1 AND SRL-2, SEE THE BRIDGE DESIGN MANUAL, LOCATED ON THE IOWA DEPARTMENT OF TRANSPORTATION, OFFICE OF BRIDGES AND STRUCTURES WEB SITE.

BECAUSE THESE BRIDGE STANDARDS HAVE BEEN REVISED FOR LRFD BASED ON 2012-COMPLETED IOWA STATE UNIVERSITY RESEARCH, FOR PILE FOUNDATIONS THE DESIGNER WILL NEED TO DETERMINE THE CONSTRUCTION CONTROL METHOD, CONTRACT LENGTH, AND DRIVING TARGET AND GIVE THAT INFORMATION ON THE FRONT SHEET OF THE PLANS. BRIDGE DESIGN MANUAL CADD NOTES E177, E718, E719, E818, AND E819 ARE APPROPRIATE FOR THAT PURPOSE. THE NOTES, AS WELL AS THE BRIDGE DESIGN MANUAL AND DESIGN EXAMPLES, ARE AVAILABLE ON THE OFFICE OF BRIDGES AND STRUCTURES WEB SITE: HTTP://WWW.IOWADOT.GOV/BRIDGE/INDEX.HTM.

THESE STANDARDS ARE USING NON-COATED, EPOXY COATED AND STAINLESS STEEL REINFORCING BARS. THE DESIGNER SHOULD NOTE WHERE THESE DIFFERENT TYPES OF BARS ARE USED THOUGHOUT THESE STANDARDS.

STRUCTURAL STEEL NOTES:

THE DESIGN OF THE STRUCTURAL STEEL MEMBERS HAS BEEN BASED ON THE FOLLOWING:

(1) DESIGN VEHICLE: HL-93.

(2) DEAD LOAD 2: 20 PSF FUTURE WEARING SURFACE AND BARRIER RAILS EQUALLY DISTRIBUTED TO ALL BEAMS.

(3) PRIMARY MEMBER FLEXURAL CAPACITY IS BASED UPON ELASTIC SECTION PROPERTIES (S), NOT PLASTIC SECTION PROPERTIES (Z).

(4) LIVE LOAD DEFLECTION LIMIT: L/800.

(5) LIVE LOAD DISTRIBUTION FACTOR FOR DEFLECTION: EQUALLY DISTRIBUTED TO ALL BEAMS.

THE FINAL DESIGNER SHALL COMPUTE STRUCTURAL STEEL CAMBER AND THEORETICAL CONCRETE HAUNCH DIAGRAMS IN ACCORDANCE WITH IOWA DOT POLICIES TO MATCH THE SPECIFIC GRADE AND SITE APPLICATIONS. ROLLED BEAMS MAY BE CAMBERED AT THE MILL BY COLD CAMBERING OR BY THE FABRICATOR BY HEAT CAMBERING OR COLD CAMBERING. THIS INFORMATION SHALL BE IN ACCORDANCE WITH ARTICLE 2408.02, K OF THE STANDARD SPECIFICATIONS.

STEEL H PILE SECTION HP10x57 SHALL BE USED FOR ALL ABUTMENTS AND PIERS. PILE SPACING AND NUMBER OF PILES ARE BASED ON A MAXIMUM CAPACITY OF 6 KSI (100 K = 50 TONS). IMPACT IS INCLUDED IN INTEGRAL ABUTMENT PILE DESIGN. IMPACT IS NOT INCLUDED IN T-PIER DESIGN. THE ACTUAL PILE LOADS REQUIRED FOR A GIVEN BRIDGE LENGTH AND SKEW ARE TABULATED ON APPROPRIATE STANDARD SHEETS.

SHEAR STUD HEIGHTS SHALL BE DETERMINED BY THE FINAL DESIGNER, BASED ON THE SITE SPECIFIC GRADE AND THE THEORETICAL CONCRETE HAUNCH DIAGRAM.

MAGNETIC PARTICLE INSPECTION OF WELDS SHALL BE DONE PER AWS SPECIFICATIONS.

SUBSTRUCTURE - CONSTRUCTION

THE MINIMUM CLEAR DISTANCE FROM FACE OF CONCRETE TO NEAR REINFORCING BAR SHALL BE 2 INCHES UNLESS OTHERWISE NOTED OR SHOWN.

SPECIFICATIONS:

DESIGN: AASHTO LRFD 4TH EDITION, SERIES OF 2007 UP TO 2008 INTERIM.
CONSTRUCTION: IOWA DEPARTMENT OF TRANSPORTATION STANDARD SPECIFICATIONS FOR HIGHWAY AND BRIDGE CONSTRUCTION, SERIES 2012, PLUS APPLICABLE GENERAL SUPPLEMENTAL SPECIFICATIONS, DEVELOPMENTAL SPECIFICATIONS, SUPPLEMENTAL SPECIFICATIONS AND SPECIAL PROVISIONS SHALL APPLY TO CONSTRUCTION WORK ON THIS PROJECT.
WELDING: AASHTO/AWS D1.5 AS SPECIFIED AND MODIFIED BY THE STANDARD SPECIFICATIONS AND CURRENT SUPPLEMENTAL SPECIFICATIONS.

DESIGN STRESSES:

DESIGN STRESSES FOR THE FOLLOWING MATERIALS ARE IN ACCORDANCE WITH THE AASHTO LRFD 4TH EDITION, SERIES OF 2007 UP TO 2008 INTERIM.

REINFORCING STEEL IN ACCORDANCE WITH SECTION 5, GRADE 60 .

CONCRETE IN ACCORDANCE WITH SECTION 5, f'c = 4000 psi.

STRUCTURAL STEEL IN ACCORDANCE WITH SECTION 6, ASTM A709, GRADE 50W AND GRADE 36.

FATIGUE CYCLES BASED ON INFINITE FATIGUE. FATIGUE INVESTIGATION WITH REFINED ANALYSIS WAS CONSIDERED FOR BRIDGE LENGTHS 180'-0, 200'-0, 220'-0, 260'-0, & 320'-0.

THESE STANDARDS GIVE MOST OF THE INFORMATION NECESSARY TO BUILD THESE BRIDGES. HOWEVER, THE FOLLOWING ADDITIONAL INFORMATION IS REQUIRED FOR USE ON PRIMARY ROUTES. FOR SECONDARY ROUTES THE ENGINEER MAY NOT REQUIRE ALL SHEETS TO BE PROVIDED:

1. TITLE SHEET WITH ENGINEERS SEAL
2. ESTIMATED QUANTITIES TOTALS
3. SUMMARY QUANTITIES SHEET
4. SITUATION PLAN LAYOUT OF BRIDGE
5. GENERAL INFORMATION SHEET (WORKING STANDARD 5251)
6. SLAB ELEVATIONS SHEET (WORKING STANDARDS 5262, 5263, 5265, 5266, 5268, 5269, 5271, 5272, 5274, 5275, 5277, 5278, 5280, 5281, 5283, 5284, 5286, 5287, 5289, 5290)
7. BEAM LINE HAUNCH DATA SHEET (WORKING STANDARDS 5264, 5267, 5270, 5273, 5276, 5279, 5282, 5285, 5288, 5291)
8. MISCELLANEOUS DETAIL SHEET (WORKING STANDARDS 5252 TO 5261)
9. PILING DESIGN INFORMATION
10. SLOPE PROTECTION LAYOUT IF NEEDED
11. CONDUIT LAYOUT
12. LIGHTING LAYOUT IF NEEDED

WEATHERING STEEL NOTES:

ALL STRUCTURAL STEEL, EXCEPT AS NOTED, SHALL CONFORM TO ASTM A709 GRADE 50W. THE MINIMUM YIELD POINT FOR GRADE 50W STRUCTURAL STEEL IS 50 ksi FOR PLATES 4" AND UNDER IN THICKNESS, AND ALL STRUCTURAL SHAPES. THE GRADE 50W STEEL IS A WEATHERING STEEL AND IS TO REMAIN UNPAINTED, EXCEPT AS NOTED. CVN TESTING IS REQUIRED FOR MAIN BEAMS AND ALL SPLICE PLATES.

FLANGE DEFLECTORS ARE TO BE ASTM A709 GRADE 50W OR 36. S3 x 7.5 BEAM ERECTION SEATS ARE TO BE ASTM A709 GRADE 50W OR 36.

ALL STRUCTURAL STEEL PIECES COMPRISING THE ABUTMENT AND PIER BEARINGS SHALL COMPLY WITH THE REQUIREMENTS AS STATED IN THE NOTES IN THIS SECTION.

SHEAR STUDS ARE TO BE OF AN APPROVED TYPE LISTED IN MATERIALS I.M. 453.10, APPENDIX A.

THE PAINTED FINISH ON BEARINGS, FLANGE DEFLECTORS AND WEATHERING STEEL SHALL BE IN ACCORDANCE WITH THE PLAN NOTES AND ARTICLE 2408.02, Q, OF THE STANDARD SPECIFICATIONS. ALL WEATHERING STEEL EMBEDDED INTO AN INTEGRAL ABUTMENT SHALL BE PAINTED TO A DISTANCE OF 2'-9 FROM THE PLANE THROUGH THE ABUTMENT BEARINGS AND SEALED BY CAULKING AT THE ABUTMENT CONCRETE AND STEEL INTERFACE.

THE STEEL FOR THE EXTERIOR BEAMS OF THE BRIDGE SHALL BE OF THE SAME TYPE AND FROM THE SAME SOURCE.

BOLTS FOR USE WITH WEATHERING STEEL SHALL BE A325 TYPE III WITH A563 GRADE DH3 NUTS AND F436 TYPE III WASHERS.

BOLTS USED TO SPLICE BEAM SECTIONS ARE TO BE INSTALLED SUCH THAT NUTS ARE ON THE INSIDE FACE OF THE BEAM WEBS FOR THE EXTERIOR BEAMS, AND ON THE TOP OF BOTH TOP AND BOTTOM FLANGES OF ALL THE BEAMS.

THE STEEL SHALL BE KEPT FREE OF OIL, GREASE, DIRT, CRAYON OR CHALK MARKS, CONCRETE SPATTER AND ANY OTHER FOREIGN MATTER THAT MAY AFFECT THE NATURAL OXIDATION OF THE STEEL. ANY FOREIGN MATTER REMAINING ON THE STEEL AFTER COMPLETION OF BRIDGE CONSTRUCTION SHALL BE REMOVED BY THE BRIDGE CONTRACTOR AS DIRECTED BY THE ENGINEER. THE RESULTANT SURFACE SHALL BE FREE OF ALL VISIBLE RESIDUES. ALL COSTS ASSOCIATED WITH CLEANING STEEL SURFACES SHALL BE BORNE BY THE BRIDGE CONTRACTOR.

SEAL MATERIAL FOR CAULKING SHALL BE NEUTRAL CURE AND NON SAG SILICONE. TWO PRODUCTS MEETING THESE CRITERIA ARE DOW 888, CSL342 JOINT SEALANT AND CRAFCO ROAD SAVER SILICONE.

ALL FIELD CONNECTIONS ARE TO BE BOLTED USING "HIGH TENSILE STRENGTH BOLTS". UNLESS OTHERWISE NOTED, ALL OPEN HOLES ARE TO BE $\frac{15}{16}$"Φ AND ALL BOLTS ARE TO BE $\frac{7}{8}$"Φ.

FILL PL THICKNESSES SHOWN ON PLANS ARE BASED ON NOMINAL BEAM DIMENSIONS. THESE THICKNESSES ARE TO BE VERIFIED OR ADJUSTED DURING FABRICATION TO SECURE A CLOSE FIT. EACH FILL PLATE SHALL FIT TO THE NEAREST $\frac{1}{16}$" IN THICKNESS AND SINGLE PLATES ARE REQUIRED AT EACH FILL LOCATION.

THE DESIGN DRAWINGS INDICATE AWS PREQUALIFIED WELDED JOINTS, AND UNLESS OTHERWISE NOTED THE DESIGN JOINT DETAILS ARE FOR MANUAL SHIELDED METAL-ARC WELDING. ALTERNATE JOINT DETAILS MAY BE SUBMITTED FOR APPROVAL.

LATEST REVISION DATE

APPROVED BY BRIDGE ENGINEER

IOWADOT Highway Division

STANDARD DESIGN - 40' ROADWAY, 3 SPAN BRIDGES

ROLLED STEEL BEAM BRIDGES

OCTOBER, 2014

GENERAL NOTES | RS40-002-14

TEE PIER NOTES:

THE TEE PIERS SHOWN IN THESE PLANS ARE DESIGNED FOR USE WITH THE RS40-14 ROLLED STEEL BEAM BRIDGE STANDARDS. THE PIER MAY BE USED FOR EITHER GRADE SEPARATION OR STREAM CROSSING STRUCTURES. THE PIERS WERE DESIGNED FOR THE FOLLOWING STREAM FORCE AND ICE LOADING CONDITIONS, AND SHOULD NOT BE USED WHERE THESE LOADING CONDITIONS ARE EXCEEDED.

ICE FORCE:
ICE FORCES WERE APPLIED AT A HEIGHT OF H/2 + 1'-6 ABOVE THE BOTTOM OF THE PIER FOOTING, WHERE H IS THE OVERALL HEIGHT OF PIER. THE EFFECTIVE ICE STRENGTH WAS 24 KSF FOR 1'-7 OF ICE DEPTH. A PRIMARY ICE FORCE (F) WAS CALCULATED ACCORDING TO THE LRFD SPECIFICATIONS AND APPLIED TO THE PIER STEM AS FOLLOWS:

CASE 1: 100% OF F APPLIED PARALLEL TO THE PIER'S LONG AXIS AND 15% OF F APPLIED PERPENDICULAR TO THE PIER'S LONG AXIS.

CASE 2: 50% OF F APPLIED PARALLEL TO THE PIER'S LONG AXIS AND 34% OF F APPLIED PERPENDICULAR TO THE PIER'S LONG AXIS.

STREAM FLOW:
THE STREAM VELOCITY USED WAS 5 FT/SEC WITH THE C_D COEFFICIENT EQUAL TO 1.4. THE RESULTING STREAM FORCE WAS ASSUMED TO ACT PARALLEL TO THE PIER'S LONG AXIS. IT WAS ASSUMED THAT SUPERSTRUCTURE ELEMENTS WILL CLEAR HIGH WATER BY APPROXIMATELY 3'-0.

FOOTING GEOMETRY:
IT WAS ASSUMED THAT THE PIER FOOTING WILL BE SET APPROXIMATELY 6'-0 BELOW THE ADJACENT STREAMBED OR GROUND SURFACE. IT WAS ALSO ASSUMED THAT THERE ARE NO SIGNIFICANT UNBALANCED EARTH PRESSURES APPLIED TO THE PIER.

ALL BRIDGES WITH TEE PIERS DETAILED ON THESE STANDARDS ARE INTENDED TO HAVE ONE FIXED PIER AND ONE EXPANSION PIER. THE PILE LAYOUT AND REINFORCEMENT SHOWN ARE THE SAME FOR EITHER FIXED OR EXPANSION PIER. THE ONLY DISTINCTION BETWEEN FIXED PIER AND EXPANSION PIER LIES IN THE SELECTION OF BEARINGS AND INSTALLATION OF ANCHOR BOLTS IN THE TOP OF THE CAP. EACH BRIDGE SHALL HAVE ONE SET OF FIXED BEARINGS AND ONE SET OF EXPANSION BEARINGS, WHICH MAY BE USED ON EITHER PIER 1 OR PIER 2. THE ANCHOR BOLTS IN THE TOP OF THE CAP SHOULD BE ELIMINATED FROM THE EXPANSION PIER.

HP10x57 STEEL PILE SHALL BE USED IN THE PILE FOOTINGS OF THE PIERS FOR EITHER FRICTION OR POINT BEARING PILE CONDITIONS. FRICTION BEARING INCLUDES SIDE FRICTION AND END BEARING IN SOIL. POINT BEARING INCLUDES SIDE FRICTION AND POINT BEARING IN ROCK. NOMINAL STRUCTURAL RESISTANCE WAS TAKEN AS 243 KIPS FOR 50 TON FRICTION BEARING PILES AND 365 KIPS FOR 75 TON POINT BEARING PILES. A NOMINAL UPLIFT RESISTANCE OF 42 KIPS PER PILE WAS USED IN THE DESIGN OF THE PIER FOOTINGS. THE PIER SHALL NOT BE USED AT SITES WHERE THIS UPLIFT FORCE CANNOT BE ACHIEVED DUE TO SPECIFIC CONDITIONS SUCH AS NEAR SURFACE ROCK LAYERS.

WHEN PIERS ARE USED IN GRADE SEPARATION STRUCTURES, EPOXY COATED REINFORCEMENT MAY BE REQUIRED FOR PIER COLUMNS. CONSULT CURRENT POLICY FOR GUIDANCE ON THE USE OF EPOXY COATED REINFORCEMENT IN SUCH CASES. ADJUST THE dl COLUMN BAR PROJECTION INTO THE CAP AND dl/d2 LAP DISTANCE ACCORDINGLY.

LATEST REVISION DATE

APPROVED BY BRIDGE ENGINEER

IOWA DOT Highway Division

STANDARD DESIGN - 40' ROADWAY, 3 SPAN BRIDGES

ROLLED STEEL BEAM BRIDGES

OCTOBER, 2014

TEE PIER NOTES | RS40-003-14

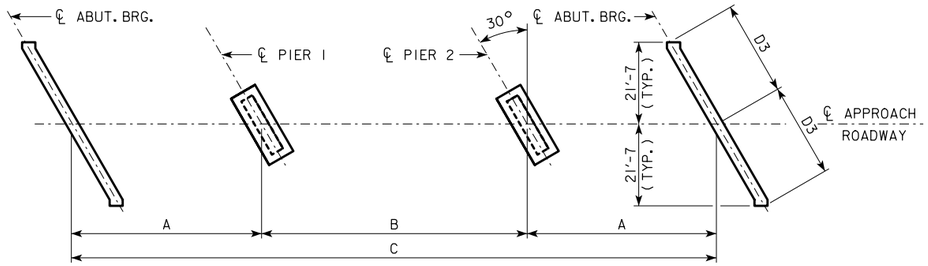

30° SKEW (R.A.)

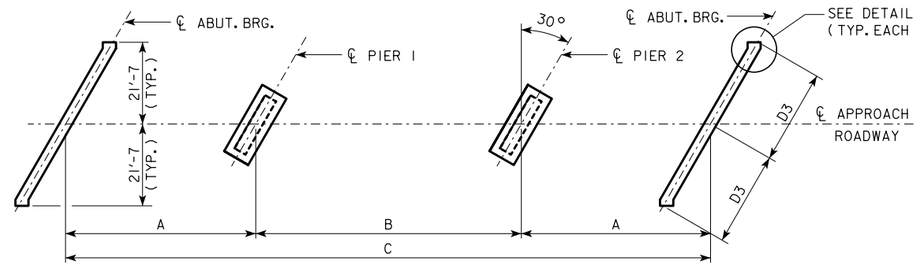

30° SKEW (L.A.)

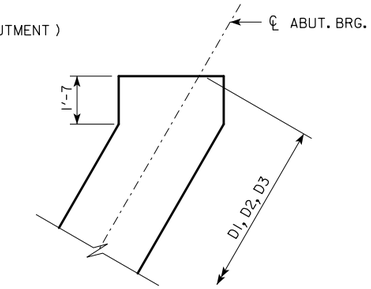

DETAIL A

DIMENSION D1, D2, D3 APPLIES AT LOCATION SHOWN ALONG THE ℄ ABUTMENT BEARING (TYP.)

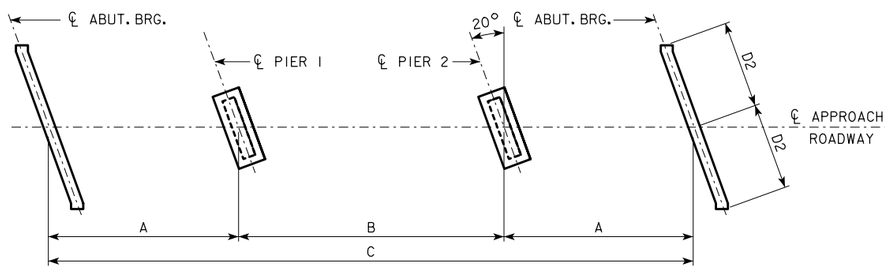

20° SKEW (R.A.)

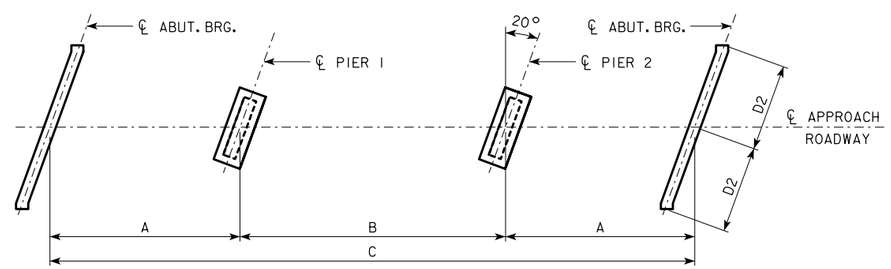

20° SKEW (L.A.)

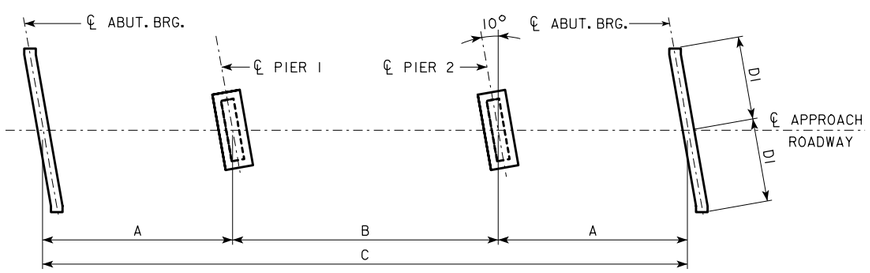

10° SKEW (R.A.)

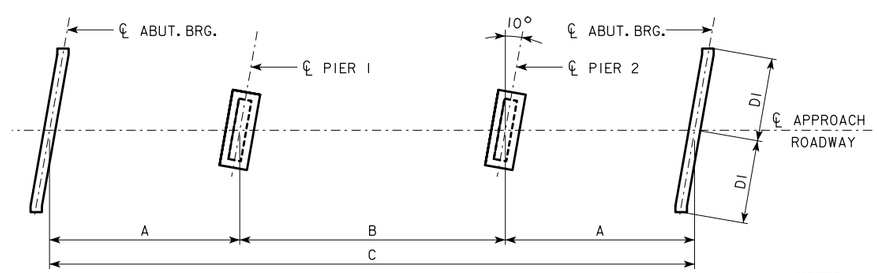

10° SKEW (L.A.)

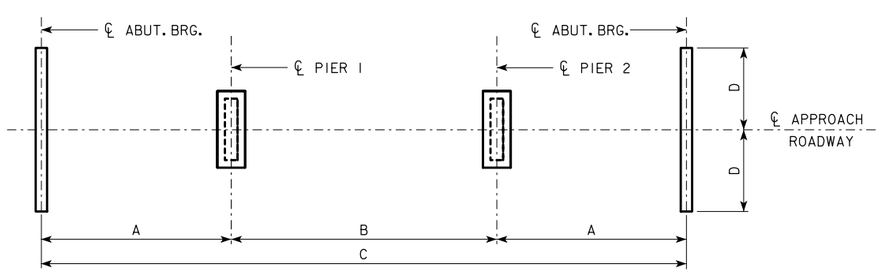

0° SKEW

NOTES:
1. ALL SUBSTRUCTURE UNITS ARE CONSTRUCTED PARALLEL TO THE SKEW INDICATED FOR EACH BRIDGE.
2. R.A. = RIGHT AHEAD
   L.A. = LEFT AHEAD

BEAM BRIDGE STANDARDS

LENGTH	A	B	C	0°SKEW D	10°SKEW D1	20°SKEW D2	30°SKEW D3
160'-0	48'-0	64'-0	160'-0	21'-7	21'-11	22'-11 5/8	24'-11 1/16
180'-0	54'-0	72'-0	180'-0	21'-7	21'-11	22'-11 5/8	24'-11 1/16
200'-0	60'-0	80'-0	200'-0	21'-7	21'-11	22'-11 5/8	24'-11 1/16
220'-0	66'-0	88'-0	220'-0	21'-7	21'-11	22'-11 5/8	24'-11 1/16
240'-0	72'-0	96'-0	240'-0	21'-7	21'-11	22'-11 5/8	24'-11 1/16
260'-0	78'-0	104'-0	260'-0	21'-7	21'-11	22'-11 5/8	24'-11 1/16
280'-0	84'-0	112'-0	280'-0	21'-7	21'-11	22'-11 5/8	24'-11 1/16
300'-0	90'-0	120'-0	300'-0	21'-7	21'-11	22'-11 5/8	24'-11 1/16
320'-0	96'-0	128'-0	320'-0	21'-7	21'-11	22'-11 5/8	24'-11 1/16

LATEST REVISION DATE

APPROVED BY BRIDGE ENGINEER

IOWA DOT Highway Division

STANDARD DESIGN - 40' ROADWAY, 3 SPAN BRIDGES

ROLLED STEEL BEAM BRIDGES

OCTOBER, 2014

SUBSTRUCTURE LAYOUTS | RS40-004-14

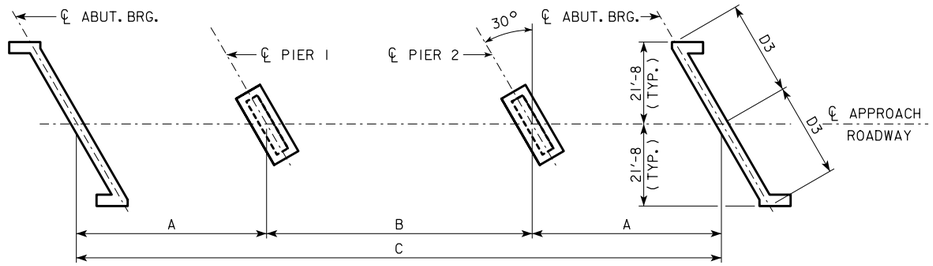

30° SKEW (R.A.)

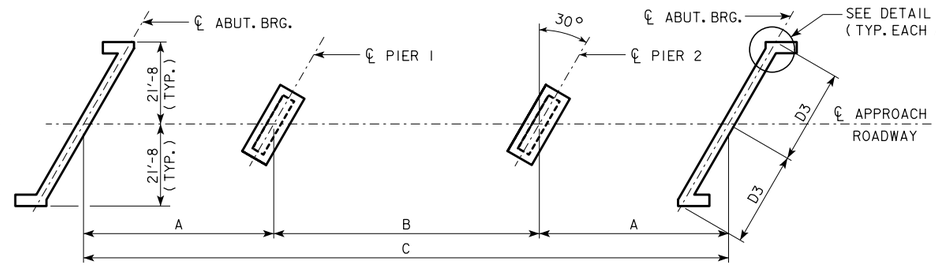

30° SKEW (L.A.)

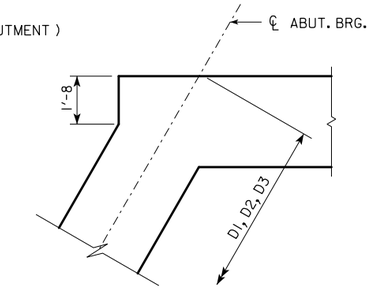

DETAIL A

DIMENSION D1, D2, D3 APPLIES AT LOCATION SHOWN ALONG THE ℄ ABUTMENT BEARING (TYP.)

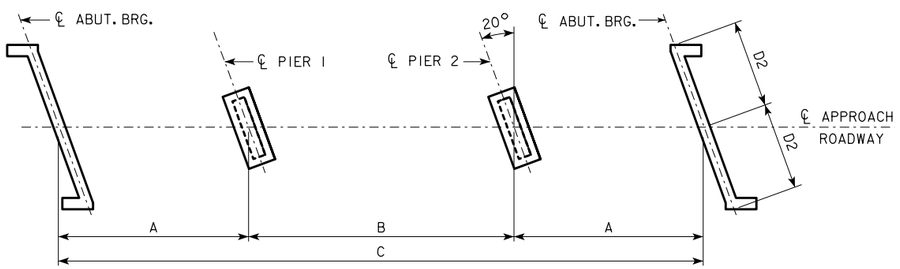

20° SKEW (R.A.)

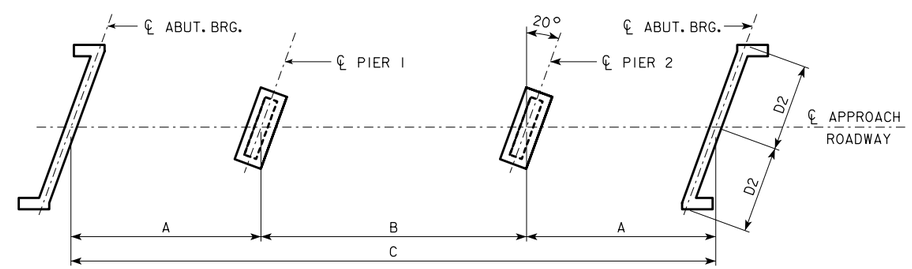

20° SKEW (L.A.)

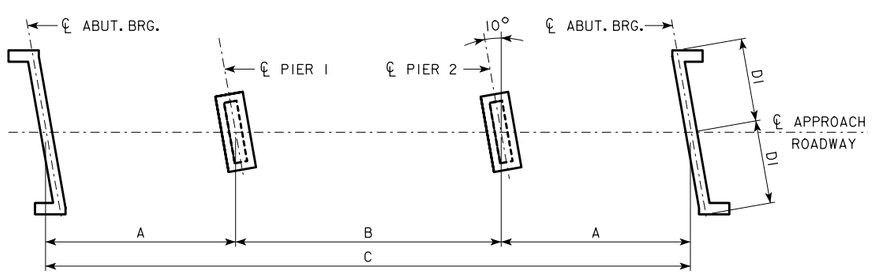

10° SKEW (R.A.)

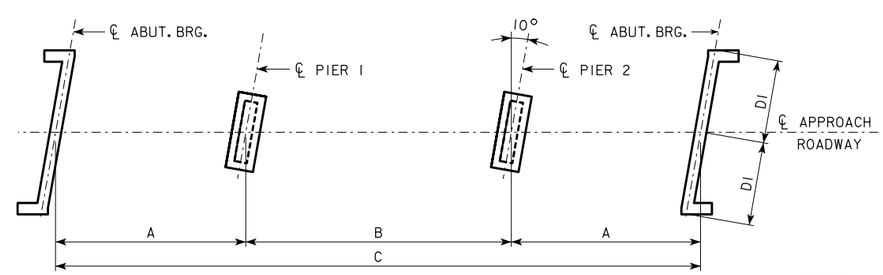

10° SKEW (L.A.)

NOTES:
1. ALL SUBSTRUCTURE UNITS ARE CONSTRUCTED PARALLEL TO THE SKEW INDICATED FOR EACH BRIDGE.
2. R.A. = RIGHT AHEAD
   L.A. = LEFT AHEAD

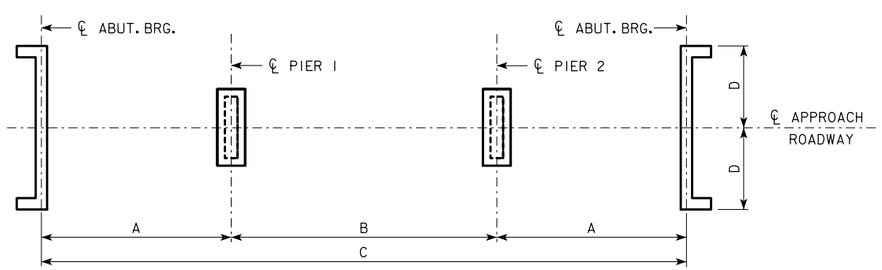

0° SKEW

BEAM BRIDGE STANDARDS

LENGTH	A	B	C	0°SKEW D	10°SKEW D1	20°SKEW D2	30°SKEW D3
340'-0	102'-0	136'-0	340'-0	21'-8	22'-0	23'-0 11/16	25'-0 1/4

LATEST REVISION DATE

APPROVED BY BRIDGE ENGINEER

IOWA DOT Highway Division

STANDARD DESIGN - 40' ROADWAY, 3 SPAN BRIDGES

ROLLED STEEL BEAM BRIDGES

OCTOBER, 2014

SUBSTRUCTURE LAYOUTS

RS40-005-14

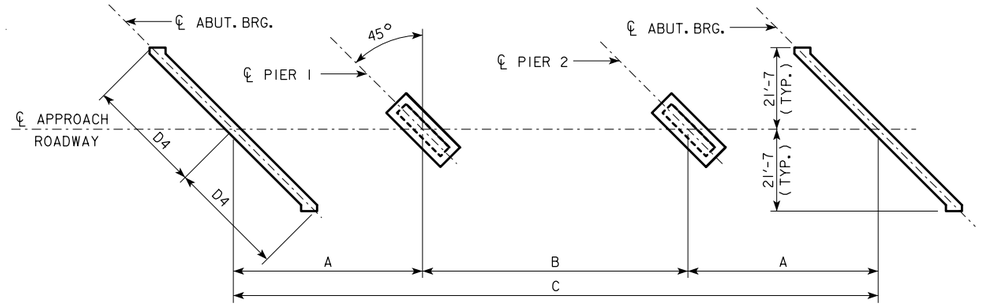

45° SKEW (R.A.)
(BRIDGES 160'-0 TO 320'-0)

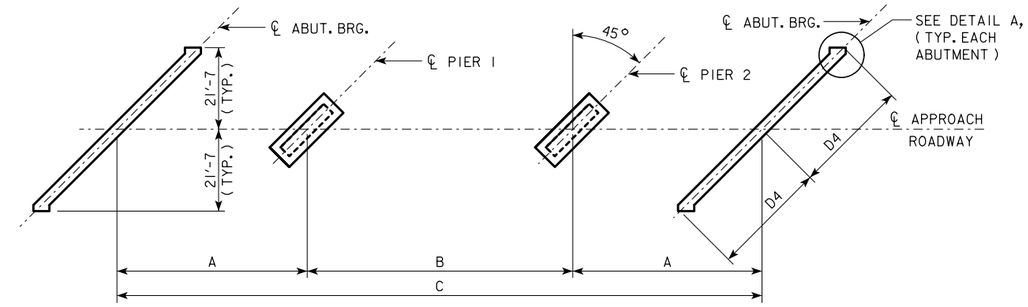

45° SKEW (L.A.)
(BRIDGES 160'-0 TO 320'-0)

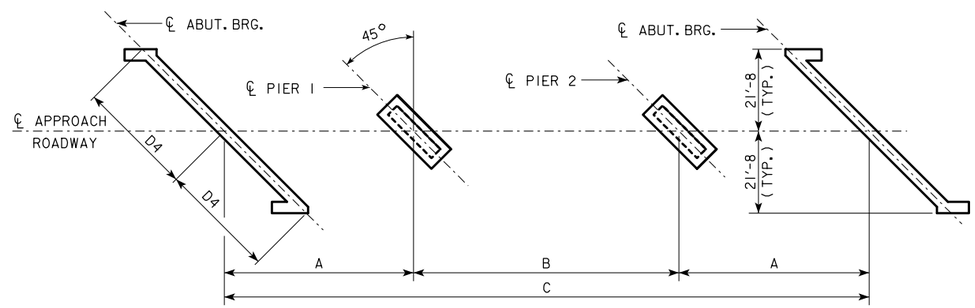

45° SKEW (R.A.)
(340'-0 BRIDGE)

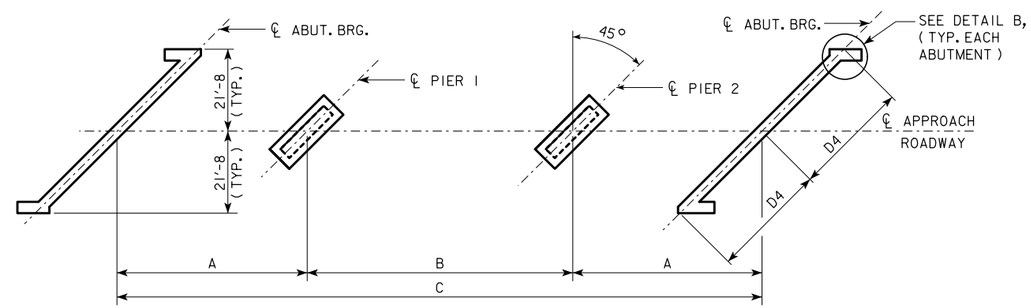

45° SKEW (L.A.)
(340'-0 BRIDGE)

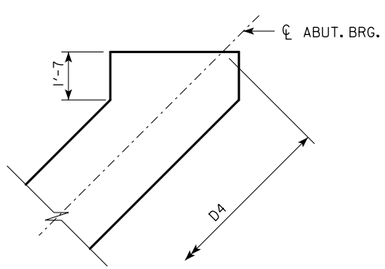

DETAIL A

DIMENSION D4 APPLIES AT LOCATION SHOWN ALONG THE ℄ ABUTMENT BEARING (TYP.)

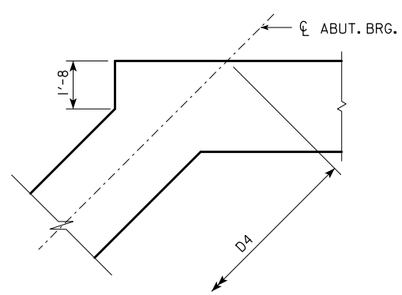

DETAIL B

DIMENSION D4 APPLIES AT LOCATION SHOWN ALONG THE ℄ ABUTMENT BEARING (TYP.)

NOTES:
1. ALL SUBSTRUCTURE UNITS ARE CONSTRUCTED PARALLEL TO THE SKEW INDICATED FOR EACH BRIDGE.

2. R.A. = RIGHT AHEAD
L.A. = LEFT AHEAD

BEAM BRIDGE STANDARDS

LENGTH	A	B	C	45° SKEW D4
160'-0	48'-0	64'-0	160'-0	30'-6 5/16
180'-0	54'-0	72'-0	180'-0	30'-6 5/16
200'-0	60'-0	80'-0	200'-0	30'-6 5/16
220'-0	66'-0	88'-0	220'-0	30'-6 5/16
240'-0	72'-0	96'-0	240'-0	30'-6 5/16
260'-0	78'-0	104'-0	260'-0	30'-6 5/16
280'-0	84'-0	112'-0	280'-0	30'-6 5/16
300'-0	90'-0	120'-0	300'-0	30'-6 5/16
320'-0	96'-0	128'-0	320'-0	30'-6 5/16
340'-0	102'-0	136'-0	340'-0	30'-7 11/16

LATEST REVISION DATE

APPROVED BY BRIDGE ENGINEER

IOWA DOT Highway Division

STANDARD DESIGN - 40' ROADWAY, 3 SPAN BRIDGES

ROLLED STEEL BEAM BRIDGES

OCTOBER, 2014

SUBSTRUCTURE LAYOUTS

RS40-006-14

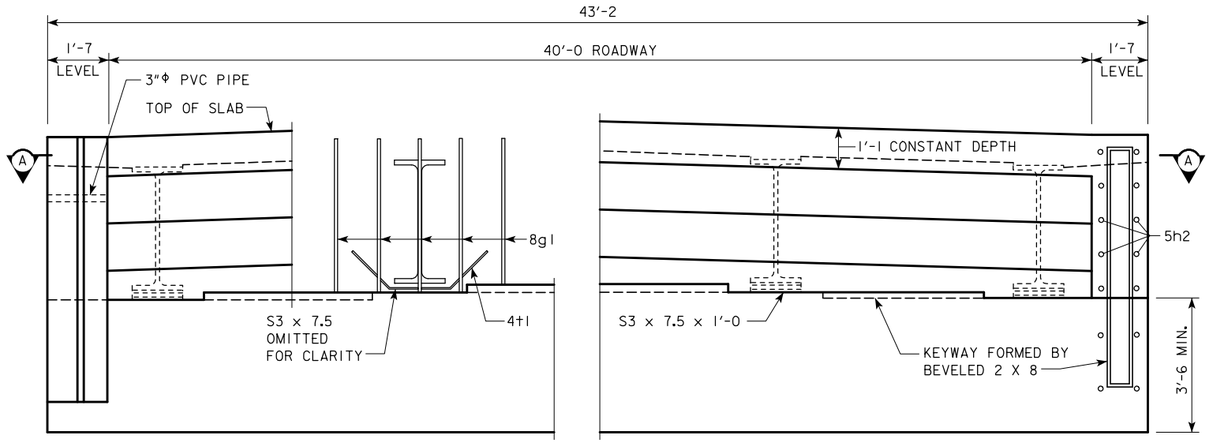

PART REAR ELEVATION AT ABUTMENT

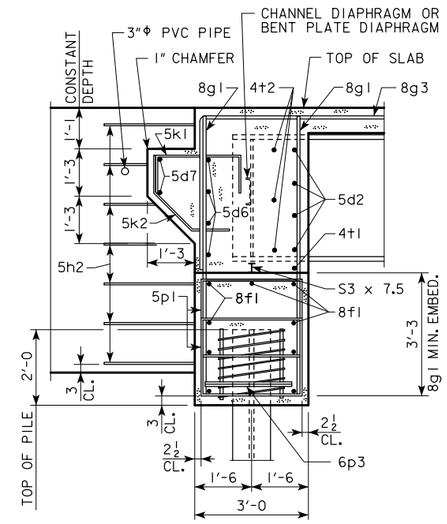

PART SECTION B-B

NOTES:
1. HOLES DRILLED THROUGH BEAM WEB FOR 5d2 AND 4t2 BARS.
2. THE SPIRAL AT THE TOP OF EACH PILE TO BE 7 TURNS OF No. 2 BAR, 21" DIAMETER, 3" PITCH WITH 3 - L $\frac{7}{8} \times \frac{7}{8} \times \frac{1}{8}$ SPACERS PUNCHED TO HOLD SPIRAL.

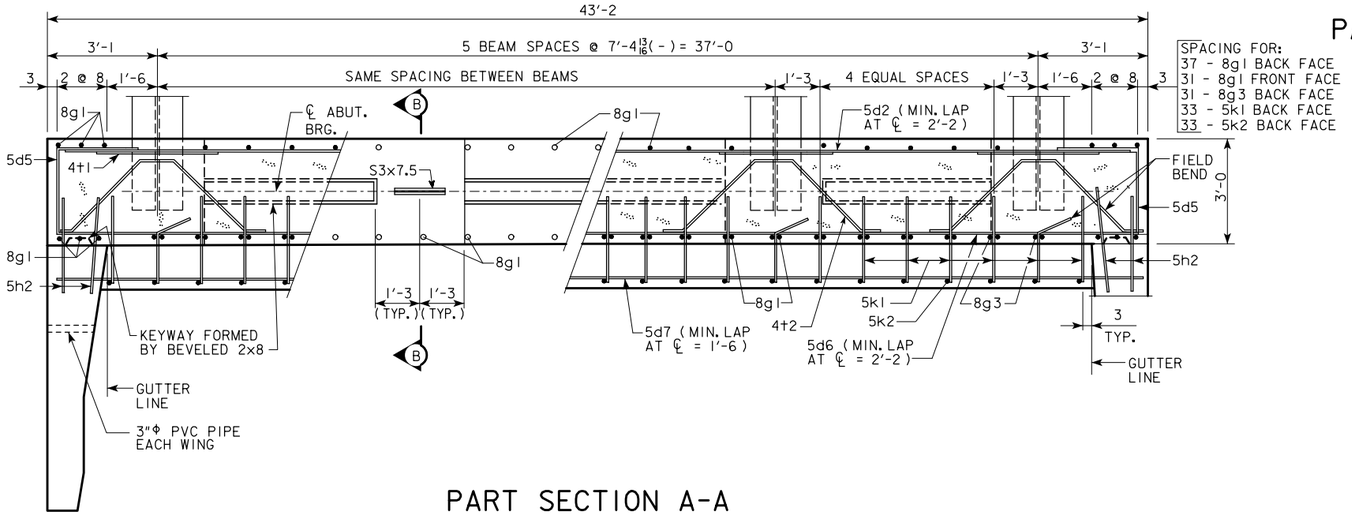

PART SECTION A-A

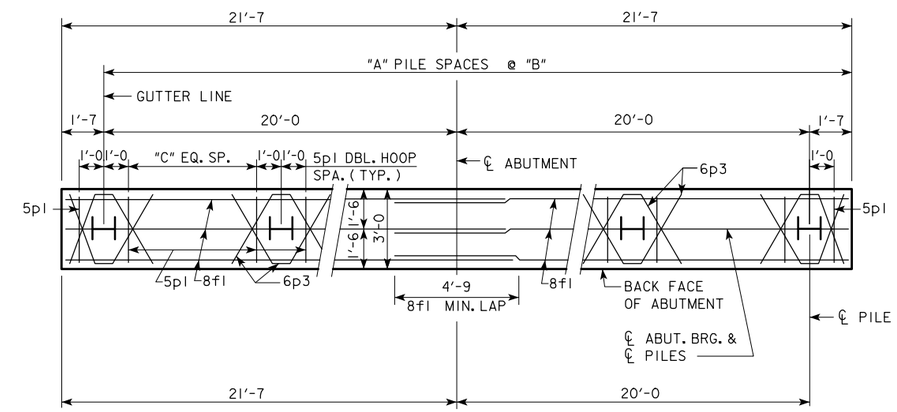

ABUTMENT PILE PLAN

NOTE:
ABUTMENT STEP DIAGRAM PROVIDED BY DESIGNER, SEE "GENERAL INFORMATION" SHEET (WORKING STANDARD 5251).

ABUTMENT NOTES:

MINIMUM CLEAR DISTANCE FROM FACE OF CONCRETE TO NEAR REINFORCING BAR IS TO BE 2" UNLESS OTHERWISE NOTED OR SHOWN.

IF NECESSARY TO PREVENT DAMAGE TO THE END OF THE BRIDGE DECK OR BACKWALL FROM CONSTRUCTION EQUIPMENT, AN APPROPRIATE METHOD OF PROTECTION APPROVED BY THE ENGINEER SHALL BE PROVIDED BY THE BRIDGE CONTRACTOR AT NO EXTRA COST TO THE COUNTY OR STATE. ABUTMENT PILES SHALL BE DRIVEN TO VALUES SHOWN IN DESIGN PLANS.

PLACE 5h2 BAR AT 1:6 SLOPE TO MATCH TRAFFIC SIDE OF ABUTMENT WING FACE. (BOTH SIDES TYPICAL)

BARRIER RAIL NOT SHOWN IN DETAILS.

IF ROCK IS CLOSER THAN 15' BELOW ABUTMENT FOOTING, SPECIAL ANALYSIS MAY BE REQUIRED.

ABUTMENT PILE SPACING

DIMENSION OR NO.	℄ TO ℄ ABUTMENT BEARING								
	160'-0	180'-0	200'-0	220'-0	240'-0	260'-0	280'-0	300'-0	320'-0
"A"	7	7	7	8	8	8	9	9	9
"B" (FT-IN)	5'-8 9/16	5'-8 9/16	5'-8 9/16	5'-0	5'-0	5'-0	4'-5 5/16	4'-5 5/16	4'-5 5/16
"C" EQUAL SPACES	4	4	4	3	3	3	3	3	3
NO. OF PILES PER ABUT.	8	8	8	9	9	9	10	10	10
PU, STRENGTH I DESIGN LOAD (KIPS)	131	137	144	132	137	143	131	136	137

NOTE: HP 10 x 57 STEEL BEARING PILING REQUIRED.
NOTE: PU, STRENGTH I DESIGN LOAD (KIPS) IS NOT THE VALUE USED IN THE FIELD FOR DRIVING PILES.

LATEST REVISION DATE

APPROVED BY BRIDGE ENGINEER

IOWA DOT Highway Division

STANDARD DESIGN - 40' ROADWAY, 3 SPAN BRIDGES

ROLLED STEEL BEAM BRIDGES

OCTOBER, 2014

ABUTMENT DETAILS
0° SKEW

RS40-007-14

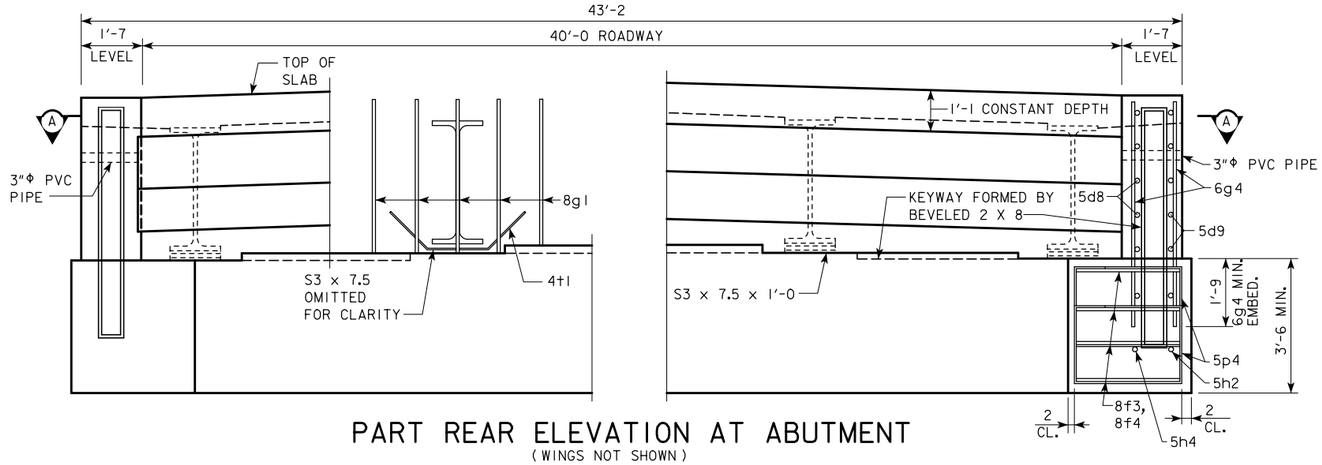

PART REAR ELEVATION AT ABUTMENT
(WINGS NOT SHOWN)

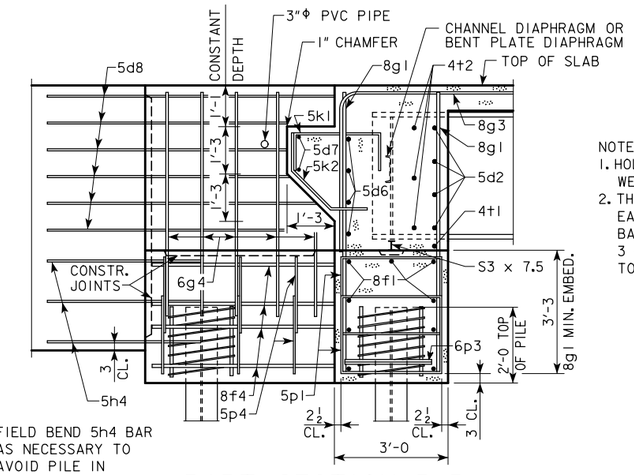

FIELD BEND 5h4 BAR AS NECESSARY TO AVOID PILE IN ABUTMENT WING.

NOTES:
1. HOLES DRILLED THROUGH BEAM WEB FOR 5d2 AND 4t2 BARS.
2. THE SPIRAL AT THE TOP OF EACH PILE TO BE 7 TURNS OF No. 2 BAR, 21" DIAMETER, 3" PITCH WITH 3 - $L\frac{7}{8} \times \frac{7}{8} \times \frac{1}{8}$ SPACERS PUNCHED TO HOLD SPIRAL.

PART SECTION B-B

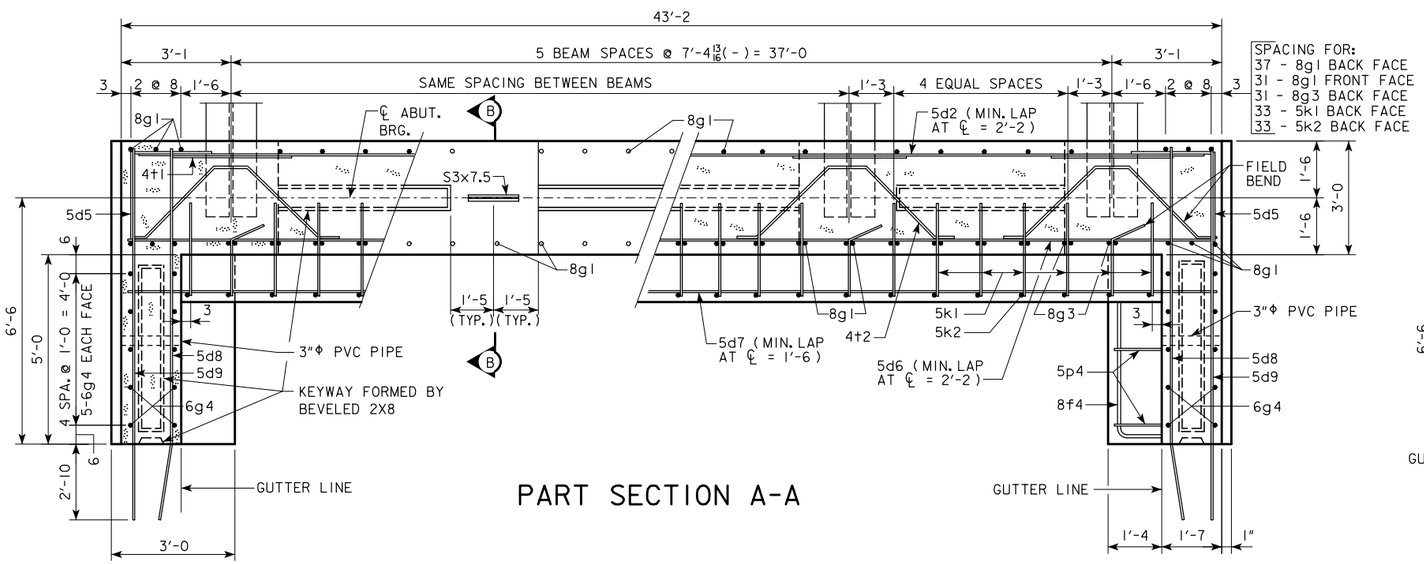

PART SECTION A-A

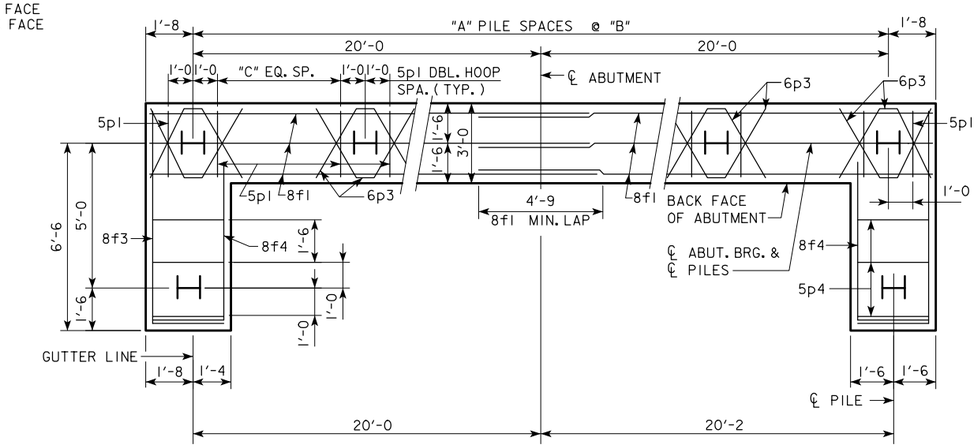

ABUTMENT PILE PLAN

NOTE:
ABUTMENT STEP DIAGRAM PROVIDED BY DESIGNER, SEE "GENERAL INFORMATION" SHEET (WORKING STANDARD 5251).

ABUTMENT NOTES:

MINIMUM CLEAR DISTANCE FROM FACE OF CONCRETE TO NEAR REINFORCING BAR IS TO BE 2" UNLESS OTHERWISE NOTED OR SHOWN.

IF NECESSARY TO PREVENT DAMAGE TO THE END OF THE BRIDGE DECK OR BACKWALL FROM CONSTRUCTION EQUIPMENT, AN APPROPRIATE METHOD OF PROTECTION APPROVED BY THE ENGINEER SHALL BE PROVIDED BY THE BRIDGE CONTRACTOR AT NO EXTRA COST TO THE COUNTY OR STATE. ABUTMENT PILES SHALL BE DRIVEN TO VALUES SHOWN IN DESIGN PLANS.

BARRIER RAIL NOT SHOWN IN DETAILS.

IF ROCK IS CLOSER THAN 15' BELOW ABUTMENT FOOTING, SPECIAL ANALYSIS MAY BE REQUIRED.

ABUTMENT PILE SPACING

DIMENSION OR NO.	℄ TO ℄ ABUTMENT BEARING
	340'-0
"A"	9
"B" (FT-IN)	$4'-5\frac{5}{16}$
"C" EQUAL SPACES	3
NO. OF PILES PER ABUT.	12
PU, STRENGTH I DESIGN LOAD (KIPS)	143

NOTE: HP 10 x 57 STEEL BEARING PILING REQUIRED.
NOTE: PU, STRENGTH I DESIGN LOAD (KIPS) IS NOT THE VALUE USED IN THE FIELD FOR DRIVING PILES.

LATEST REVISION DATE

APPROVED BY BRIDGE ENGINEER

IOWA DOT Highway Division

STANDARD DESIGN - 40' ROADWAY, 3 SPAN BRIDGES

ROLLED STEEL BEAM BRIDGES

OCTOBER, 2014

ABUTMENT DETAILS
0° SKEW

RS40-008-14

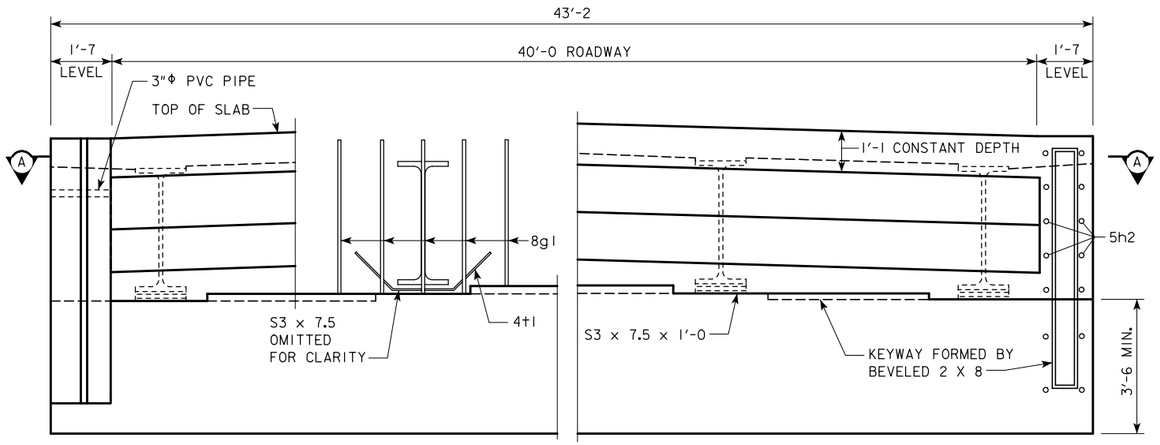

PART REAR ELEVATION AT ABUTMENT

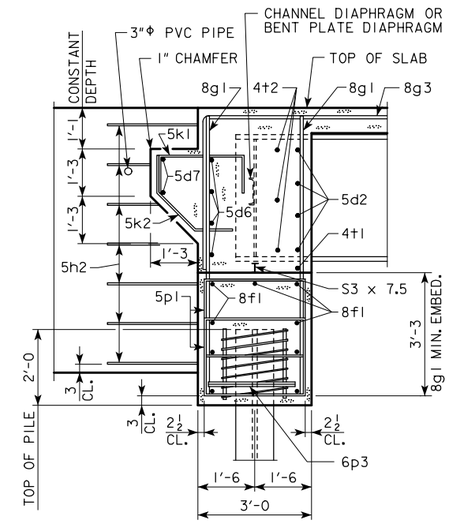

PART SECTION B-B

NOTES:
1. HOLES DRILLED THROUGH BEAM WEB FOR 5d2 AND 4t2 BARS.
2. THE SPIRAL AT THE TOP OF EACH PILE TO BE 7 TURNS OF No. 2 BAR, 21" DIAMETER, 3" PITCH WITH 3 - L $\frac{7}{8}$ x $\frac{7}{8}$ x $\frac{1}{8}$ SPACERS PUNCHED TO HOLD SPIRAL.

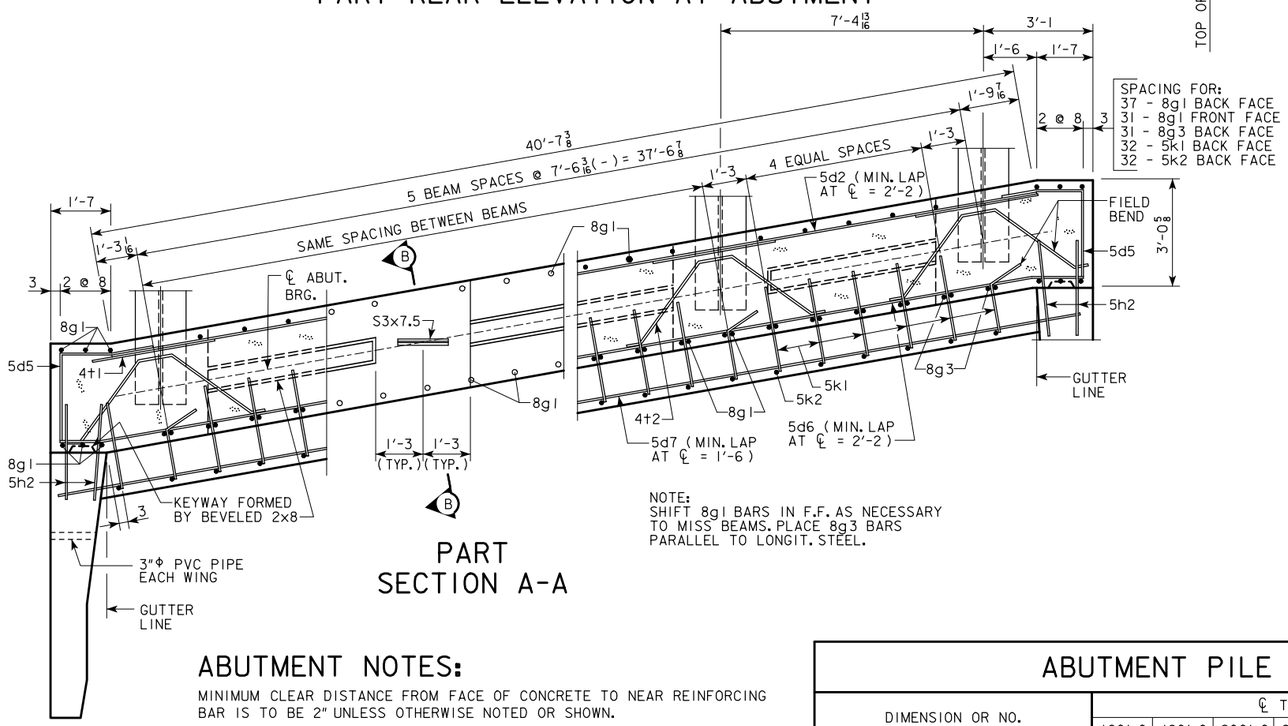

NOTE:
SHIFT 8g1 BARS IN F.F. AS NECESSARY TO MISS BEAMS. PLACE 8g3 BARS PARALLEL TO LONGIT. STEEL.

PART SECTION A-A

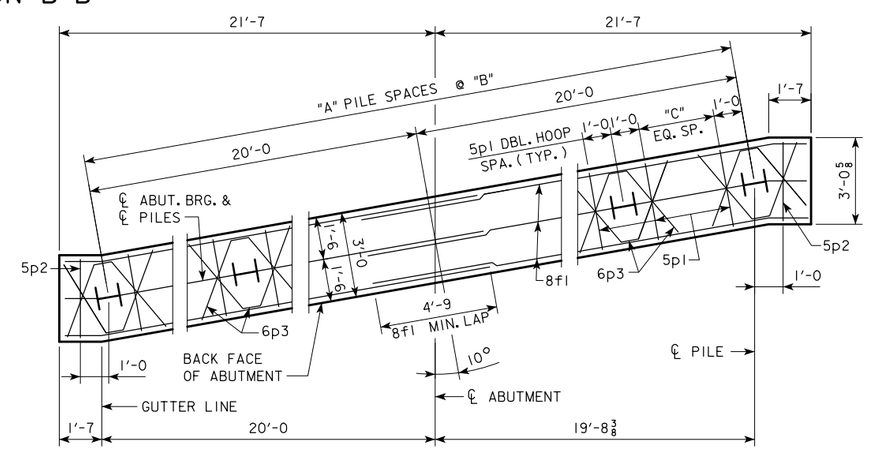

ABUTMENT PILE PLAN

NOTE:
ABUTMENT STEP DIAGRAM PROVIDED BY DESIGNER, SEE "GENERAL INFORMATION" SHEET (WORKING STANDARD 5251).

ABUTMENT NOTES:

MINIMUM CLEAR DISTANCE FROM FACE OF CONCRETE TO NEAR REINFORCING BAR IS TO BE 2" UNLESS OTHERWISE NOTED OR SHOWN.

IF NECESSARY TO PREVENT DAMAGE TO THE END OF THE BRIDGE DECK OR BACKWALL FROM CONSTRUCTION EQUIPMENT, AN APPROPRIATE METHOD OF PROTECTION APPROVED BY THE ENGINEER SHALL BE PROVIDED BY THE BRIDGE CONTRACTOR AT NO EXTRA COST TO THE COUNTY OR STATE. ABUTMENT PILES SHALL BE DRIVEN TO VALUES SHOWN IN DESIGN PLANS.

PLACE 5h2 BAR AT 1:6 SLOPE TO MATCH TRAFFIC SIDE OF ABUTMENT WING FACE. (BOTH SIDES TYPICAL)

BARRIER RAIL NOT SHOWN IN DETAILS.

IF ROCK IS CLOSER THAN 15' BELOW ABUTMENT FOOTING, SPECIAL ANALYSIS MAY BE REQUIRED.

ABUTMENT PILE SPACING

DIMENSION OR NO.	℄ TO ℄ ABUTMENT BEARING								
	160'-0	180'-0	200'-0	220'-0	240'-0	260'-0	280'-0	300'-0	320'-0
"A"	7	7	7	8	8	8	9	9	9
"B" (FT-IN)	5'-8 9/16	5'-8	5'-8 9/16	5'-0	5'-0	5'-0	4'-5 5/16	4'-5 5/16	4'-5 5/16
"C" EQUAL SPACES	4	4	4	3	3	3	3	3	3
NO. OF PILES PER ABUT.	8	8	8	9	9	9	10	10	10
PU, STRENGTH I DESIGN LOAD (KIPS)	131	138	144	132	137	143	132	136	138

NOTE: HP 10 x 57 STEEL BEARING PILING REQUIRED.

NOTE: PU, STRENGTH I DESIGN LOAD (KIPS) IS NOT THE VALUE USED IN THE FIELD FOR DRIVING PILES.

LATEST REVISION DATE

APPROVED BY BRIDGE ENGINEER

IOWA DOT Highway Division

STANDARD DESIGN - 40' ROADWAY, 3 SPAN BRIDGES

ROLLED STEEL BEAM BRIDGES

OCTOBER, 2014

ABUTMENT DETAILS 10° SKEW

RS40-009-14

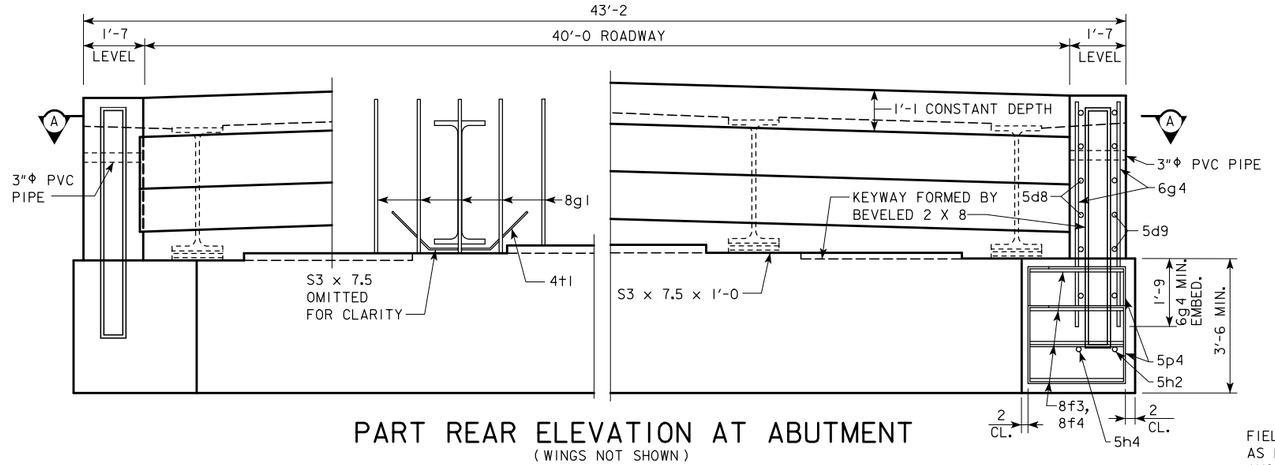

PART REAR ELEVATION AT ABUTMENT

(WINGS NOT SHOWN)

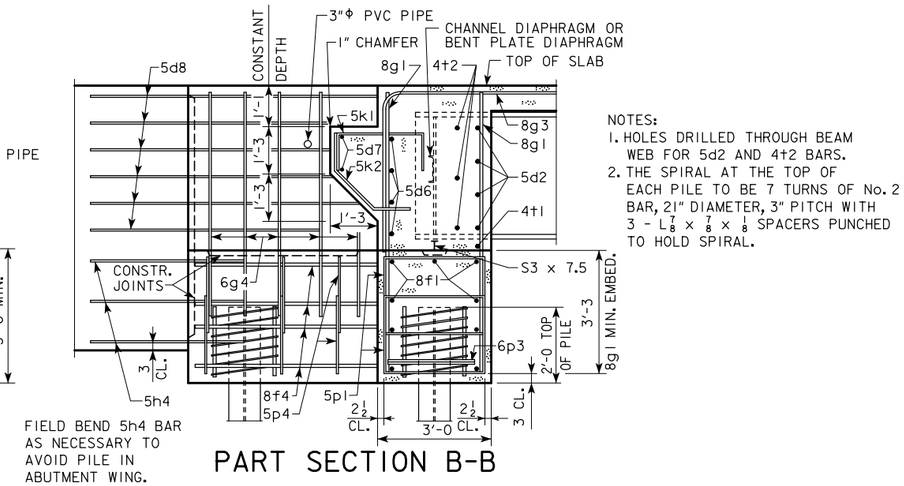

FIELD BEND 5h4 BAR AS NECESSARY TO AVOID PILE IN ABUTMENT WING.

NOTES:
1. HOLES DRILLED THROUGH BEAM WEB FOR 5d2 AND 4t2 BARS.
2. THE SPIRAL AT THE TOP OF EACH PILE TO BE 7 TURNS OF No. 2 BAR, 21" DIAMETER, 3" PITCH WITH 3 - $L\frac{7}{8} \times \frac{7}{8} \times \frac{1}{8}$ SPACERS PUNCHED TO HOLD SPIRAL.

PART SECTION B-B

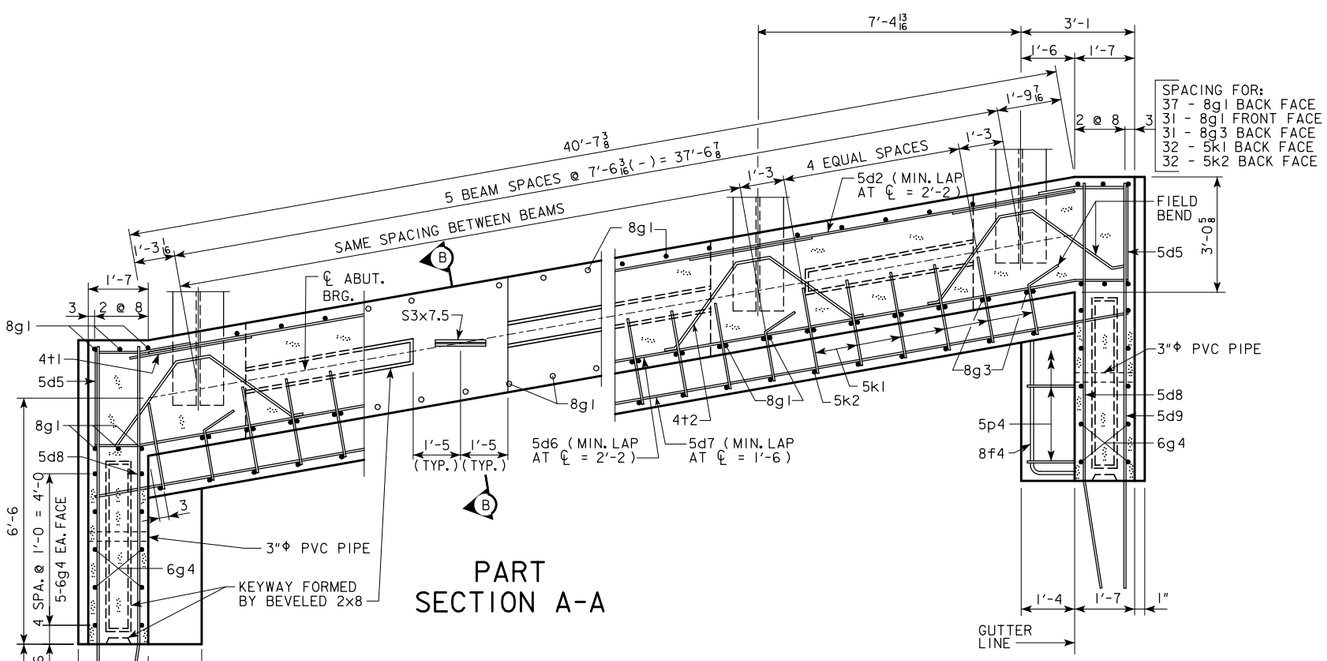

PART SECTION A-A

NOTE:
SHIFT 8g1 BARS IN F.F. AS NECESSARY TO MISS BEAMS. PLACE 8g3 BARS PARALLEL TO LONGITUDINAL STEEL.

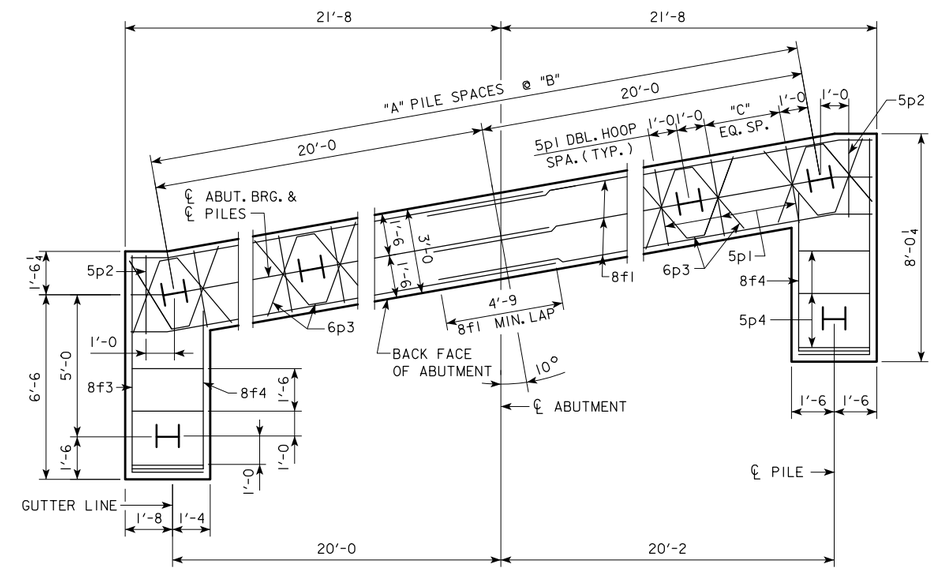

ABUTMENT PILE PLAN

NOTE:
ABUTMENT STEP DIAGRAM PROVIDED BY DESIGNER, SEE "GENERAL INFORMATION" SHEET (WORKING STANDARD 5251).

ABUTMENT NOTES:

MINIMUM CLEAR DISTANCE FROM FACE OF CONCRETE TO NEAR REINFORCING BAR IS TO BE 2" UNLESS OTHERWISE NOTED OR SHOWN.

IF NECESSARY TO PREVENT DAMAGE TO THE END OF THE BRIDGE DECK OR BACKWALL FROM CONSTRUCTION EQUIPMENT, AN APPROPRIATE METHOD OF PROTECTION APPROVED BY THE ENGINEER SHALL BE PROVIDED BY THE BRIDGE CONTRACTOR AT NO EXTRA COST TO THE COUNTY OR STATE. ABUTMENT PILES SHALL BE DRIVEN TO VALUES SHOWN IN DESIGN PLANS.

BARRIER RAIL NOT SHOWN IN DETAILS.

IF ROCK IS CLOSER THAN 15' BELOW ABUTMENT FOOTING, SPECIAL ANALYSIS MAY BE REQUIRED.

ABUTMENT PILE SPACING

DIMENSION OR NO.	℄ TO ℄ ABUTMENT BEARING
	340'-0
"A"	9
"B" (FT-IN)	$4'-5\frac{5}{16}$
"C" EQUAL SPACES	3
NO. OF PILES PER ABUT.	12
PU, STRENGTH I DESIGN LOAD (KIPS)	143

NOTE: HP 10 x 57 STEEL BEARING PILING REQUIRED.
NOTE: PU, STRENGTH I DESIGN LOAD (KIPS) IS NOT THE VALUE USED IN THE FIELD FOR DRIVING PILES.

LATEST REVISION DATE

APPROVED BY BRIDGE ENGINEER

IOWA DOT Highway Division

STANDARD DESIGN - 40' ROADWAY, 3 SPAN BRIDGES

ROLLED STEEL BEAM BRIDGES

OCTOBER, 2014

ABUTMENT DETAILS 10° SKEW

RS40-010-14

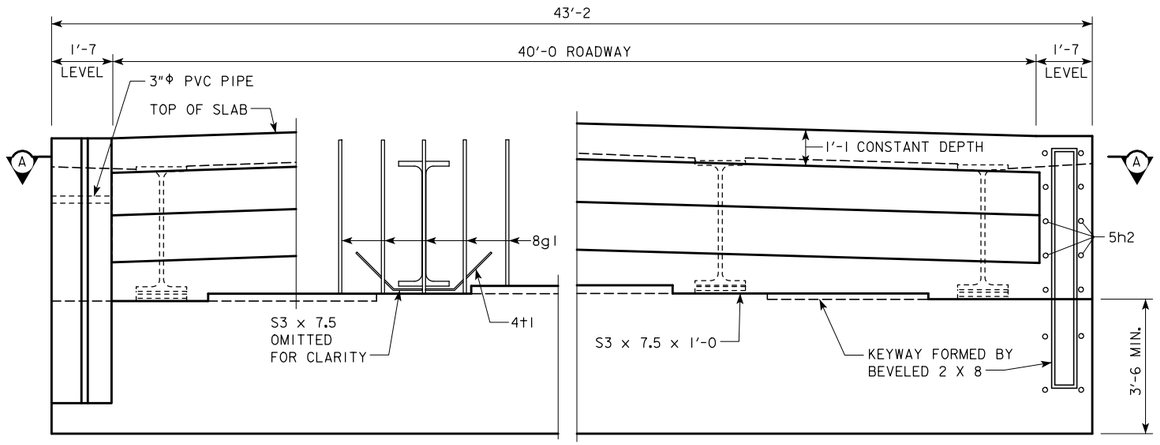

PART REAR ELEVATION AT ABUTMENT

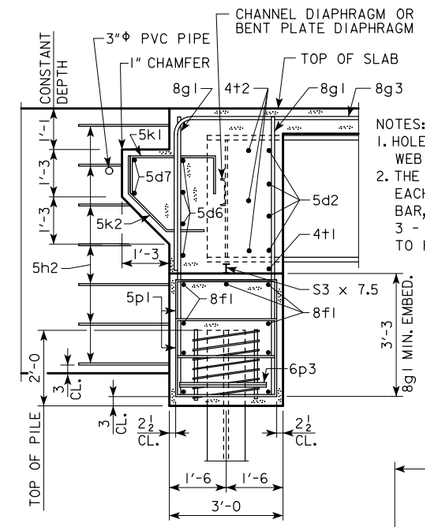

NOTES:
1. HOLES DRILLED THROUGH BEAM WEB FOR 5d2 AND 4t2 BARS.
2. THE SPIRAL AT THE TOP OF EACH PILE TO BE 7 TURNS OF No. 2 BAR, 21" DIAMETER, 3" PITCH WITH 3 - L $\frac{7}{8} \times \frac{7}{8} \times \frac{1}{8}$ SPACERS PUNCHED TO HOLD SPIRAL.

PART SECTION B-B

ABUTMENT NOTES:

MINIMUM CLEAR DISTANCE FROM FACE OF CONCRETE TO NEAR REINFORCING BAR IS TO BE 2" UNLESS OTHERWISE NOTED OR SHOWN.

IF NECESSARY TO PREVENT DAMAGE TO THE END OF THE BRIDGE DECK OR BACKWALL FROM CONSTRUCTION EQUIPMENT, AN APPROPRIATE METHOD OF PROTECTION APPROVED BY THE ENGINEER SHALL BE PROVIDED BY THE BRIDGE CONTRACTOR AT NO EXTRA COST TO THE COUNTY OR STATE.

ABUTMENT PILES SHALL BE DRIVEN TO VALUES SHOWN IN DESIGN PLANS.

PLACE 5h2 BAR AT 1:6 SLOPE TO MATCH TRAFFIC SIDE OF ABUTMENT WING FACE. (BOTH SIDES TYPICAL)

BARRIER RAIL NOT SHOWN IN DETAILS.

IF ROCK IS CLOSER THAN 15' BELOW ABUTMENT FOOTING, SPECIAL ANALYSIS MAY BE REQUIRED.

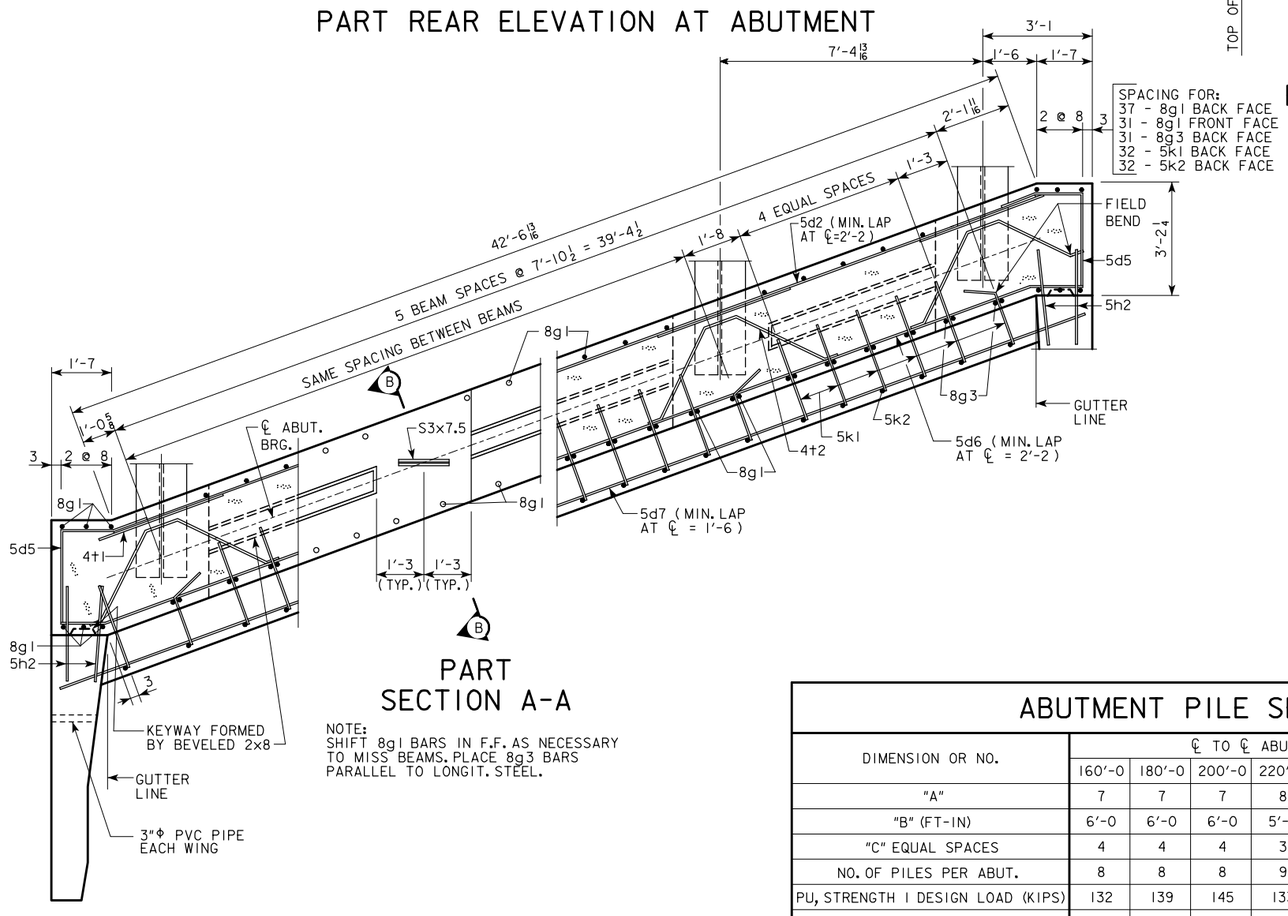

PART SECTION A-A

NOTE:
SHIFT 8g1 BARS IN F.F. AS NECESSARY TO MISS BEAMS. PLACE 8g3 BARS PARALLEL TO LONGIT. STEEL.

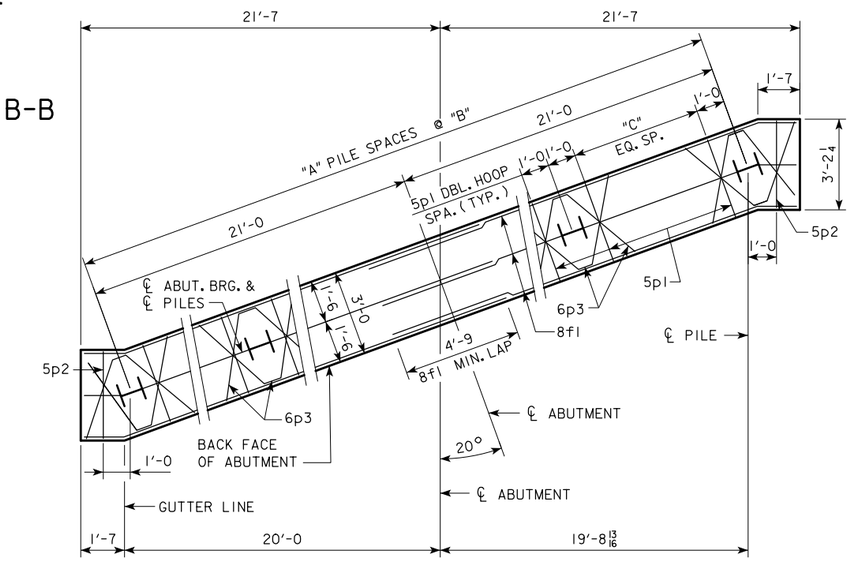

ABUTMENT PILE PLAN

NOTE:
ABUTMENT STEP DIAGRAM PROVIDED BY DESIGNER, SEE "GENERAL INFORMATION" SHEET (WORKING STANDARD 5251).

ABUTMENT PILE SPACING

DIMENSION OR NO.	℄ TO ℄ ABUTMENT BEARING								
	160'-0	180'-0	200'-0	220'-0	240'-0	260'-0	280'-0	300'-0	320'-0
"A"	7	7	7	8	8	8	9	9	9
"B" (FT-IN)	6'-0	6'-0	6'-0	5'-3	5'-3	5'-3	4'-8	4'-8	4'-8
"C" EQUAL SPACES	4	4	4	3	3	3	3	3	3
NO. OF PILES PER ABUT.	8	8	8	9	9	9	10	10	10
PU, STRENGTH I DESIGN LOAD (KIPS)	132	139	145	133	138	144	132	137	139

NOTE: HP 10 x 57 STEEL BEARING PILING REQUIRED.
NOTE: PU, STRENGTH I DESIGN LOAD (KIPS) IS NOT THE VALUE USED IN THE FIELD FOR DRIVING PILES.

LATEST REVISION DATE

APPROVED BY BRIDGE ENGINEER

IOWADOT Highway Division

STANDARD DESIGN - 40' ROADWAY, 3 SPAN BRIDGES

ROLLED STEEL BEAM BRIDGES

OCTOBER, 2014

ABUTMENT DETAILS 20° SKEW

RS40-011-14

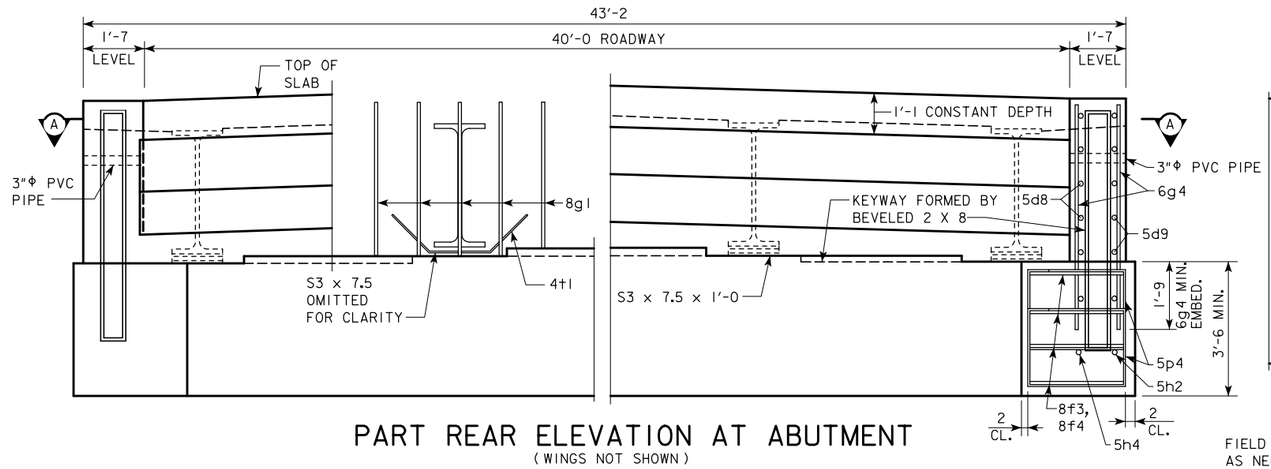

PART REAR ELEVATION AT ABUTMENT
(WINGS NOT SHOWN)

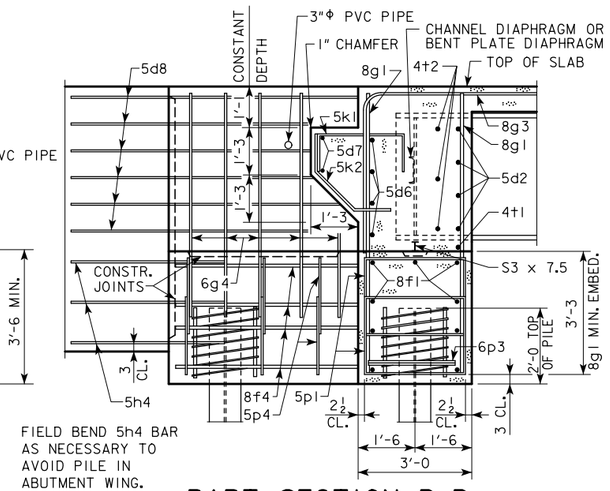

FIELD BEND 5h4 BAR AS NECESSARY TO AVOID PILE IN ABUTMENT WING.

PART SECTION B-B

ABUTMENT NOTES:

MINIMUM CLEAR DISTANCE FROM FACE OF CONCRETE TO NEAR REINFORCING BAR IS TO BE 2" UNLESS OTHERWISE NOTED OR SHOWN.

IF NECESSARY TO PREVENT DAMAGE TO THE END OF THE BRIDGE DECK OR BACKWALL FROM CONSTRUCTION EQUIPMENT, AN APPROPRIATE METHOD OF PROTECTION APPROVED BY THE ENGINEER SHALL BE PROVIDED BY THE BRIDGE CONTRACTOR AT NO EXTRA COST TO THE COUNTY OR STATE.

ABUTMENT PILES SHALL BE DRIVEN TO VALUES SHOWN IN DESIGN PLANS.

BARRIER RAIL NOT SHOWN IN DETAILS.

IF ROCK IS CLOSER THAN 15' BELOW ABUTMENT FOOTING, SPECIAL ANALYSIS MAY BE REQUIRED.

NOTES:
1. HOLES DRILLED THROUGH BEAM WEB FOR 5d2 AND 4t2 BARS.
2. THE SPIRAL AT THE TOP OF EACH PILE TO BE 7 TURNS OF No. 2 BAR, 21" DIAMETER, 3" PITCH WITH 3 - $L\frac{7}{8} \times \frac{7}{8} \times \frac{1}{8}$ SPACERS PUNCHED TO HOLD SPIRAL.

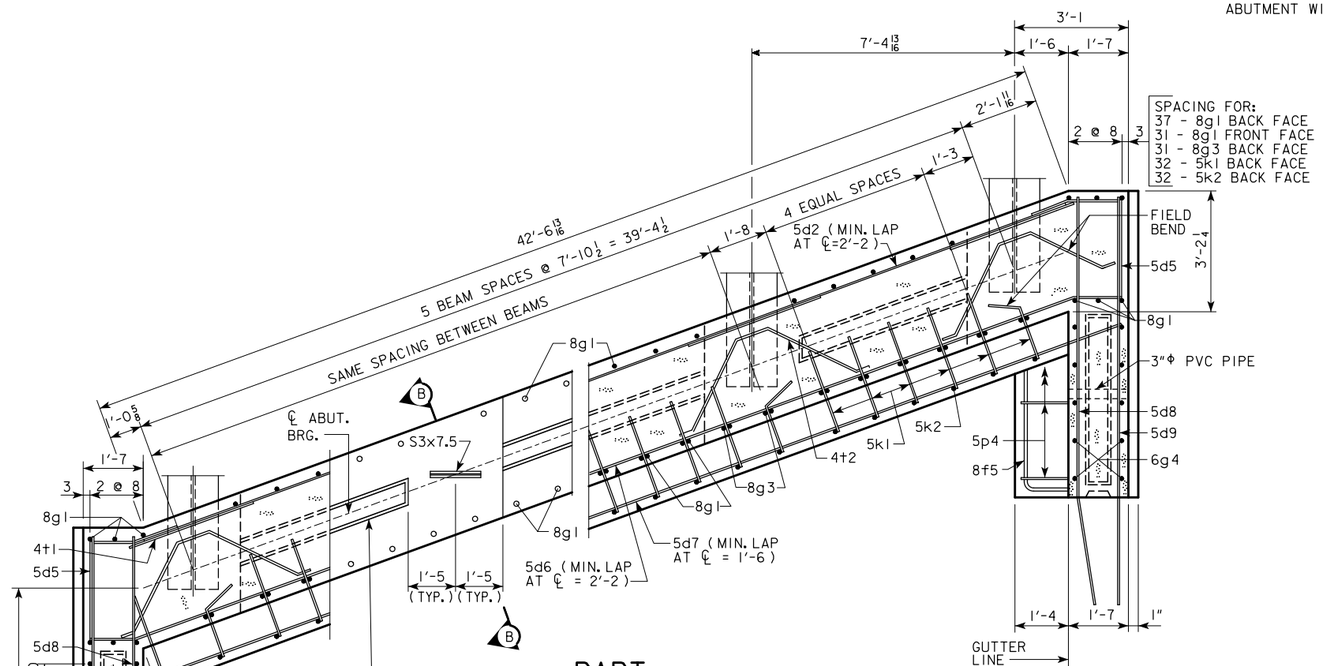

PART SECTION A-A

NOTE:
SHIFT 8g1 BARS IN F.F. AS NECESSARY TO MISS BEAMS. PLACE 8g3 BARS PARALLEL TO LONGITUDINAL STEEL.

NOTE:
ABUTMENT STEP DIAGRAM PROVIDED BY DESIGNER, SEE "GENERAL INFORMATION" SHEET (WORKING STANDARD 5251).

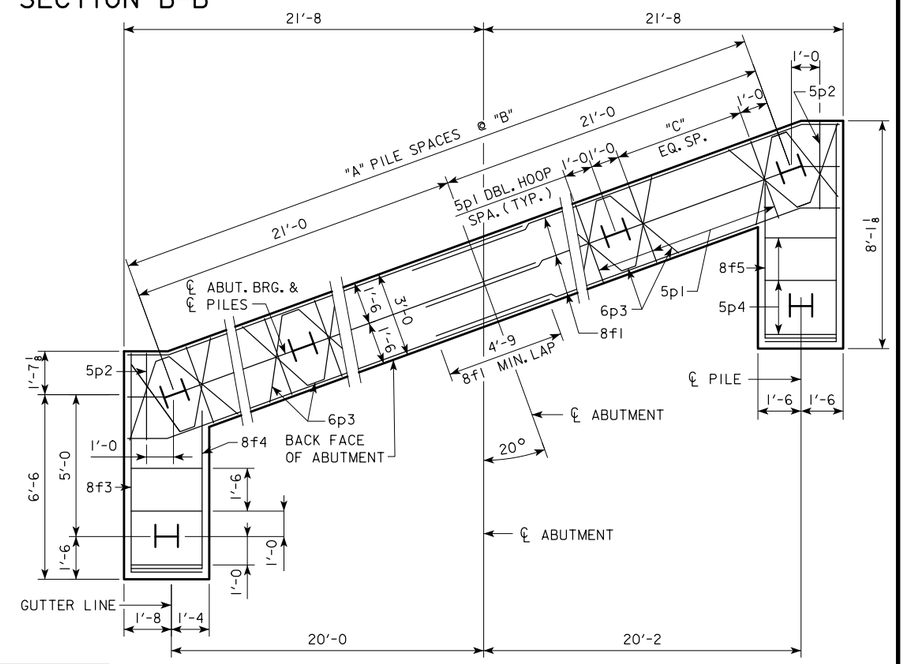

ABUTMENT PILE PLAN

ABUTMENT PILE SPACING

DIMENSION OR NO.	℄ TO ℄ ABUTMENT BEARING
	340'-0
"A"	9
"B" (FT-IN)	4'-8
"C" EQUAL SPACES	3
NO. OF PILES PER ABUT.	12
PU, STRENGTH I DESIGN LOAD (KIPS)	144

NOTE: HP 10 x 57 STEEL BEARING PILING REQUIRED.
NOTE: PU, STRENGTH I DESIGN LOAD (KIPS) IS NOT THE VALUE USED IN THE FIELD FOR DRIVING PILES.

LATEST REVISION DATE

APPROVED BY BRIDGE ENGINEER

IOWA DOT Highway Division

STANDARD DESIGN - 40' ROADWAY, 3 SPAN BRIDGES

ROLLED STEEL BEAM BRIDGES

OCTOBER, 2014

ABUTMENT DETAILS 20° SKEW

RS40-012-14

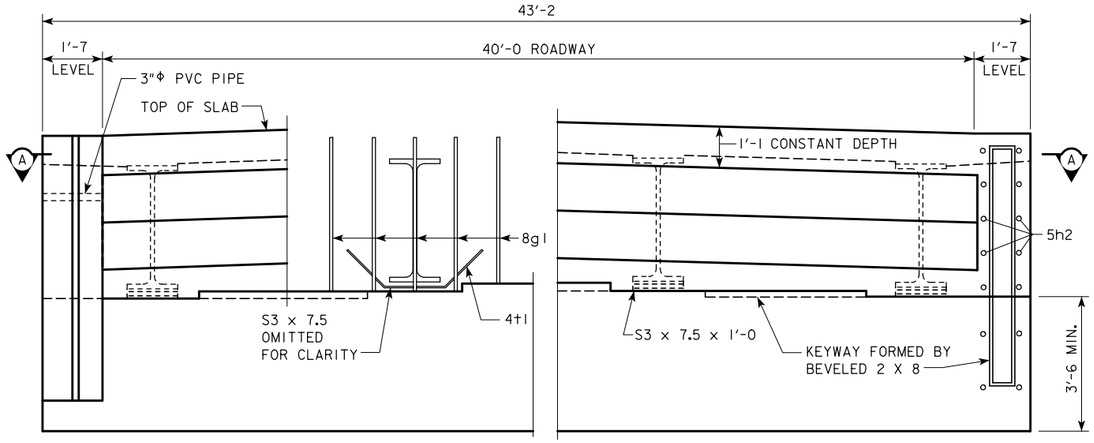

PART REAR ELEVATION AT ABUTMENT

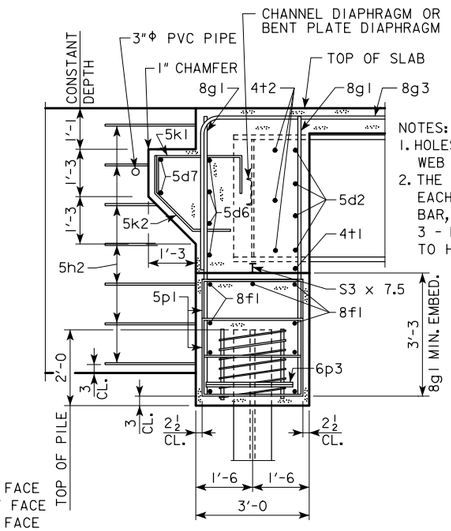

NOTES:
1. HOLES DRILLED THROUGH BEAM WEB FOR 5d2 AND 4t2 BARS.
2. THE SPIRAL AT THE TOP OF EACH PILE TO BE 7 TURNS OF No. 2 BAR, 21" DIAMETER, 3" PITCH WITH 3 - $L\frac{7}{8} \times \frac{7}{8} \times \frac{1}{8}$ SPACERS PUNCHED TO HOLD SPIRAL.

PART SECTION B-B

ABUTMENT NOTES:

MINIMUM CLEAR DISTANCE FROM FACE OF CONCRETE TO NEAR REINFORCING BAR IS TO BE 2" UNLESS OTHERWISE NOTED OR SHOWN.

IF NECESSARY TO PREVENT DAMAGE TO THE END OF THE BRIDGE DECK OR BACKWALL FROM CONSTRUCTION EQUIPMENT, AN APPROPRIATE METHOD OF PROTECTION APPROVED BY THE ENGINEER SHALL BE PROVIDED BY THE BRIDGE CONTRACTOR AT NO EXTRA COST TO THE COUNTY OR STATE.

ABUTMENT PILES SHALL BE DRIVEN TO VALUES SHOWN IN DESIGN PLANS.

PLACE 5h2 BAR AT 1:6 SLOPE TO MATCH TRAFFIC SIDE OF ABUTMENT WING FACE. (BOTH SIDES TYPICAL)

BARRIER RAIL NOT SHOWN IN DETAILS.

IF ROCK IS CLOSER THAN 15' BELOW ABUTMENT FOOTING, SPECIAL ANALYSIS MAY BE REQUIRED.

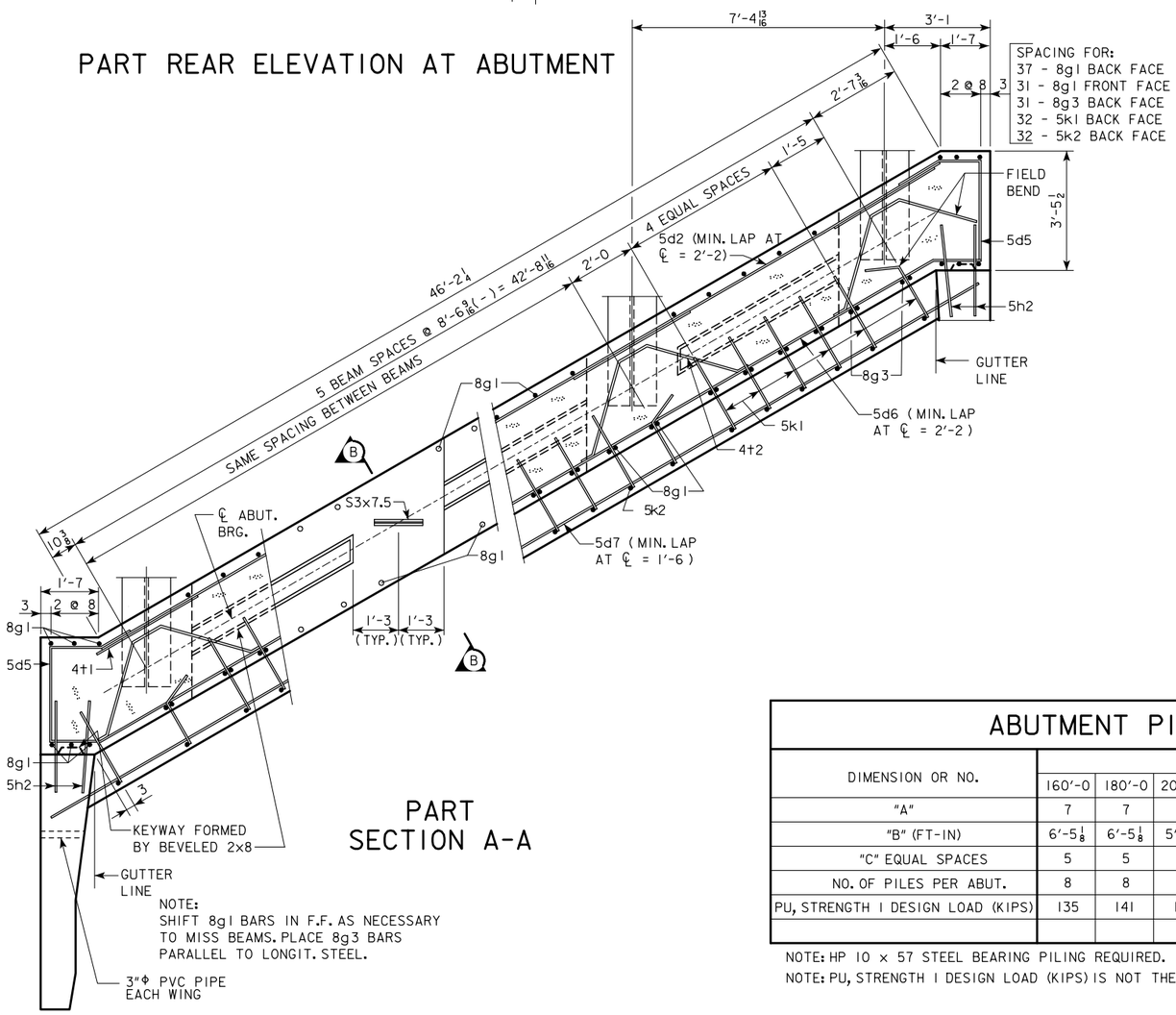

NOTE:
SHIFT 8g1 BARS IN F.F. AS NECESSARY TO MISS BEAMS. PLACE 8g3 BARS PARALLEL TO LONGIT. STEEL.

PART SECTION A-A

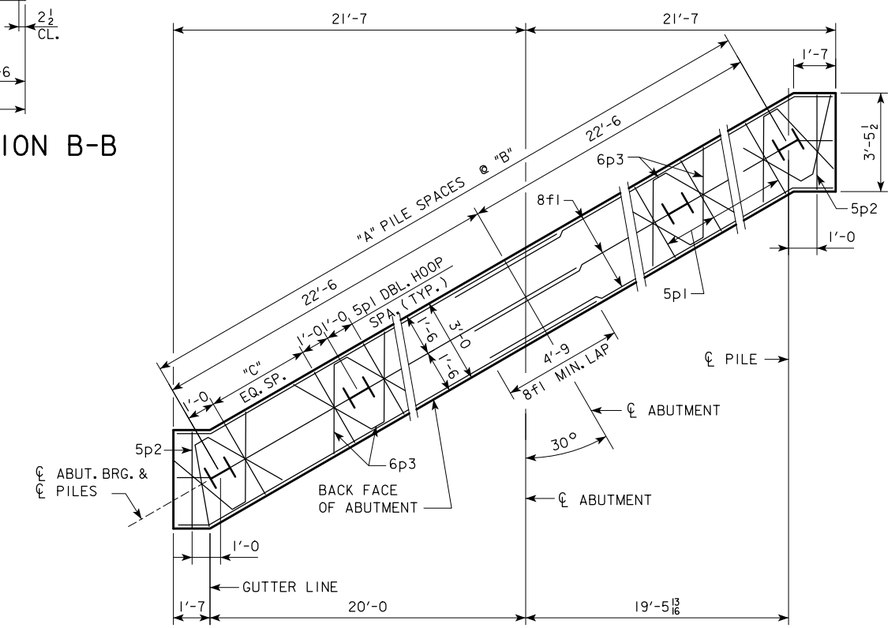

ABUTMENT PILE PLAN

NOTE:
ABUTMENT STEP DIAGRAM PROVIDED BY DESIGNER, SEE "GENERAL INFORMATION" SHEET (WORKING STANDARD 5251).

ABUTMENT PILE SPACING

DIMENSION OR NO.	℄ TO ℄ ABUTMENT BEARING								
	160'-0	180'-0	200'-0	220'-0	240'-0	260'-0	280'-0	300'-0	320'-0
"A"	7	7	8	8	8	9	9	9	9
"B" (FT-IN)	6'-5 1/8	6'-5 1/8	5'-7 1/2	5'-7 1/2	5'-7 1/2	5'-0	5'-0	5'-0	5'-0
"C" EQUAL SPACES	5	5	4	4	4	3	3	3	3
NO. OF PILES PER ABUT.	8	8	9	9	9	10	10	10	10
PU, STRENGTH I DESIGN LOAD (KIPS)	135	141	129	135	140	130	134	139	141

NOTE: HP 10 x 57 STEEL BEARING PILING REQUIRED.
NOTE: PU, STRENGTH I DESIGN LOAD (KIPS) IS NOT THE VALUE USED IN THE FIELD FOR DRIVING PILES.

LATEST REVISION DATE

APPROVED BY BRIDGE ENGINEER

IOWA DOT Highway Division

STANDARD DESIGN - 40' ROADWAY, 3 SPAN BRIDGES

ROLLED STEEL BEAM BRIDGES

OCTOBER, 2014

ABUTMENT DETAILS
30° SKEW

RS40-013-14

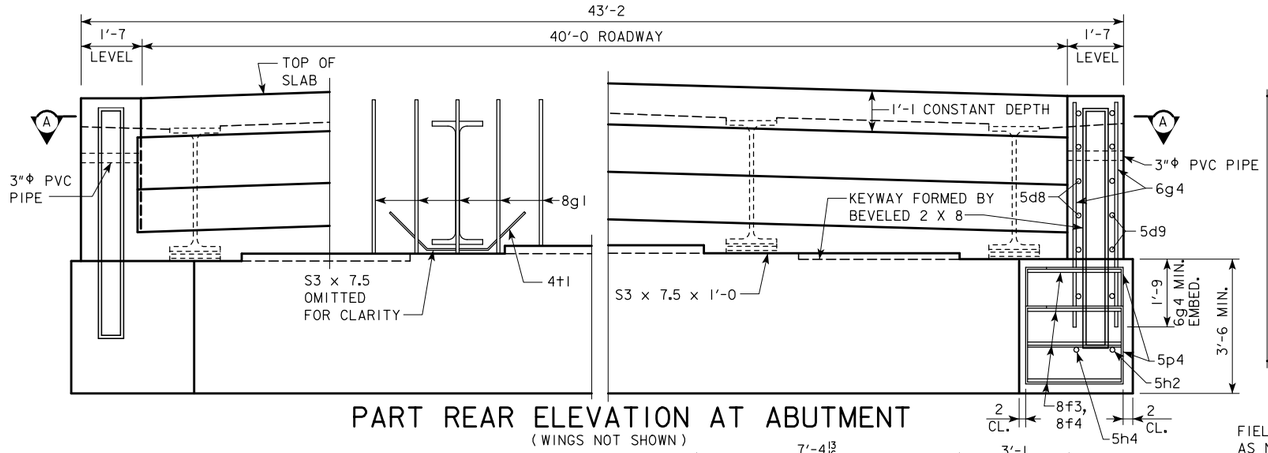

PART REAR ELEVATION AT ABUTMENT
(WINGS NOT SHOWN)

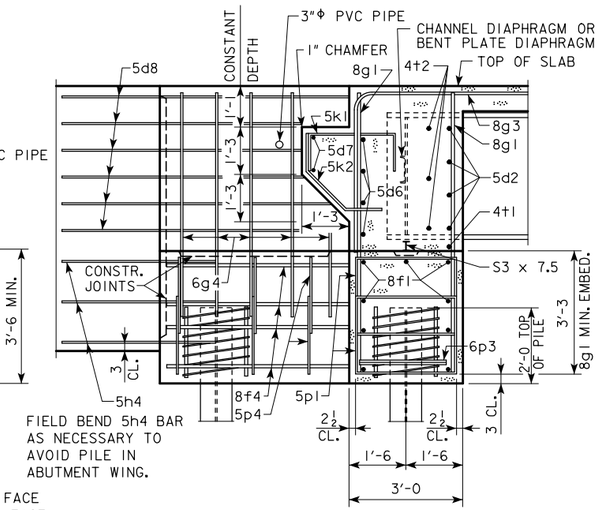

FIELD BEND 5h4 BAR AS NECESSARY TO AVOID PILE IN ABUTMENT WING.

PART SECTION B-B

ABUTMENT NOTES:

MINIMUM CLEAR DISTANCE FROM FACE OF CONCRETE TO NEAR REINFORCING BAR IS TO BE 2" UNLESS OTHERWISE NOTED OR SHOWN.

IF NECESSARY TO PREVENT DAMAGE TO THE END OF THE BRIDGE DECK OR BACKWALL FROM CONSTRUCTION EQUIPMENT, AN APPROPRIATE METHOD OF PROTECTION APPROVED BY THE ENGINEER SHALL BE PROVIDED BY THE BRIDGE CONTRACTOR AT NO EXTRA COST TO THE COUNTY OR STATE.

ABUTMENT PILES SHALL BE DRIVEN TO VALUES SHOWN IN DESIGN PLANS.

PLACE 5h2 BAR AT 1:6 SLOPE TO MATCH TRAFFIC SIDE OF ABUTMENT WING FACE. (BOTH SIDES TYPICAL)

BARRIER RAIL NOT SHOWN IN DETAILS.

IF ROCK IS CLOSER THAN 15' BELOW ABUTMENT FOOTING, SPECIAL ANALYSIS MAY BE REQUIRED.

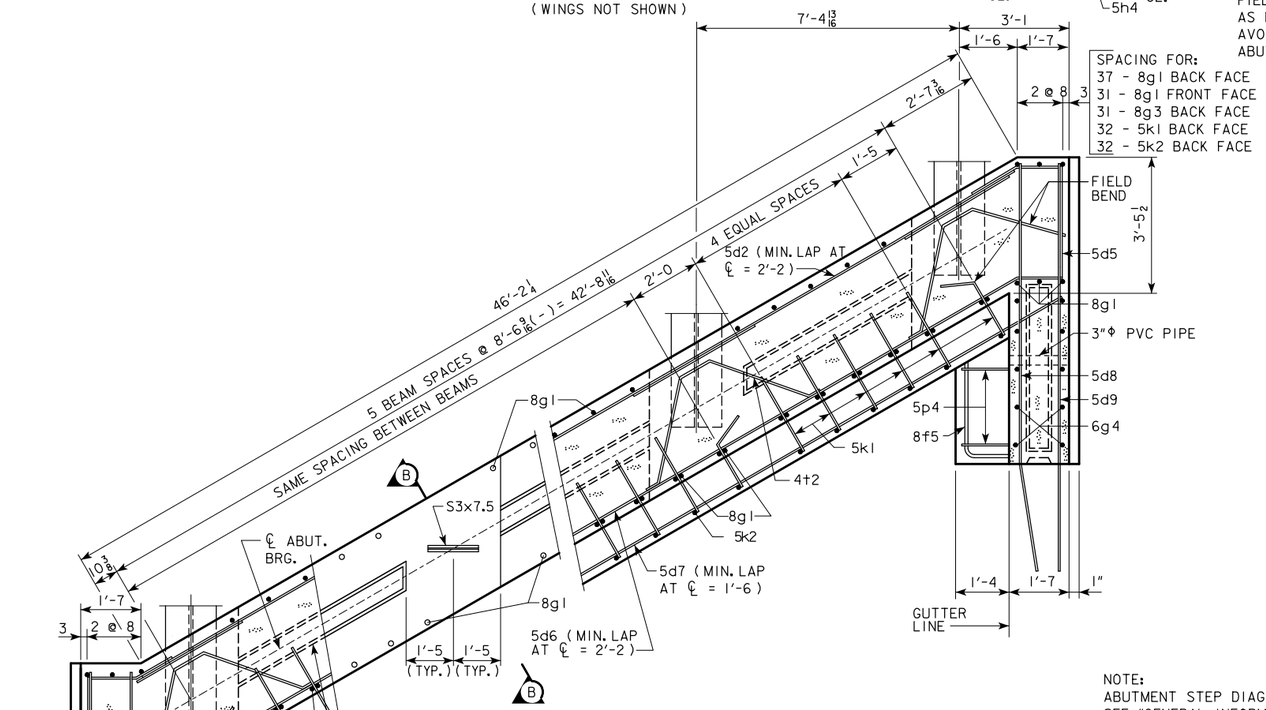

PART SECTION A-A

NOTES:
1. HOLES DRILLED THROUGH BEAM WEB FOR 5d2 AND 4t2 BARS.
2. THE SPIRAL AT THE TOP OF EACH PILE TO BE 7 TURNS OF No. 2 BAR, 21" DIAMETER, 3" PITCH WITH 3 - $L\frac{7}{8} \times \frac{7}{8} \times \frac{1}{8}$ SPACERS PUNCHED TO HOLD SPIRAL.

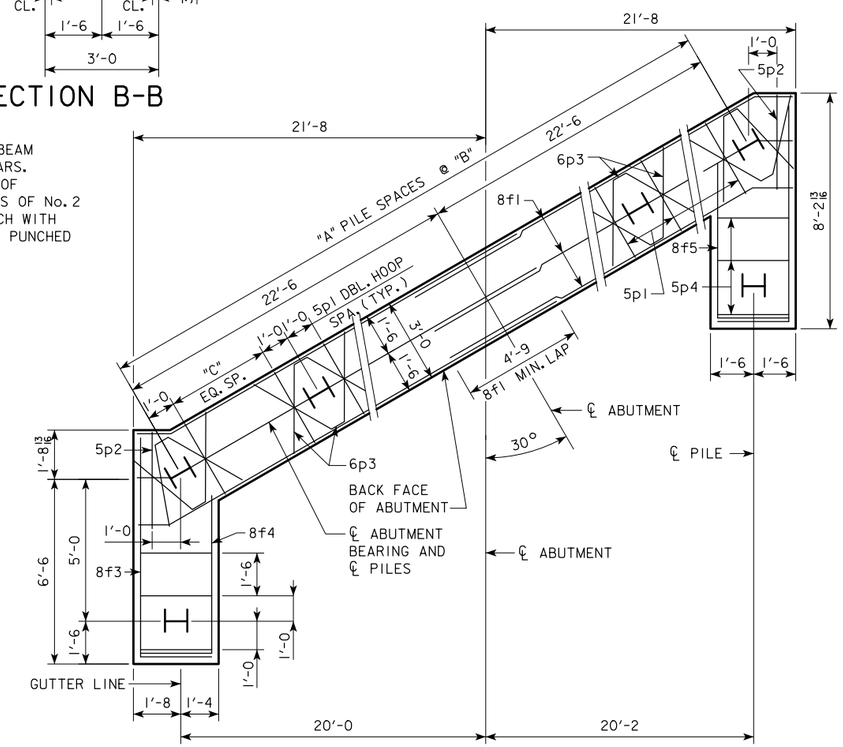

ABUTMENT PILE PLAN

NOTE:
ABUTMENT STEP DIAGRAM PROVIDED BY DESIGNER, SEE "GENERAL INFORMATION" SHEET (WORKING STANDARD 5251).

ABUTMENT PILE SPACING

DIMENSION OR NO.	℄ TO ℄ ABUTMENT BEARING
	340'-0
"A"	10
"B" (FT-IN)	4'-6
"C" EQUAL SPACES	3
NO. OF PILES PER ABUT.	13
PU, STRENGTH I DESIGN LOAD (KIPS)	132

NOTE: HP 10 x 57 STEEL BEARING PILING REQUIRED.
NOTE: PU, STRENGTH I DESIGN LOAD (KIPS) IS NOT THE VALUE USED IN THE FIELD FOR DRIVING PILES.

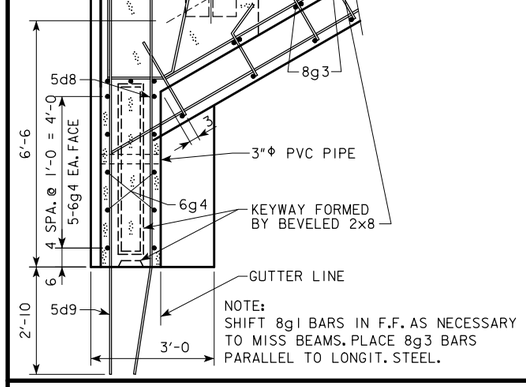

NOTE:
SHIFT 8g1 BARS IN F.F. AS NECESSARY TO MISS BEAMS. PLACE 8g3 BARS PARALLEL TO LONGIT. STEEL.

LATEST REVISION DATE

APPROVED BY BRIDGE ENGINEER

IOWA DOT Highway Division

STANDARD DESIGN - 40' ROADWAY, 3 SPAN BRIDGES

ROLLED STEEL BEAM BRIDGES

OCTOBER, 2014

ABUTMENT DETAILS 30° SKEW

RS40-014-14

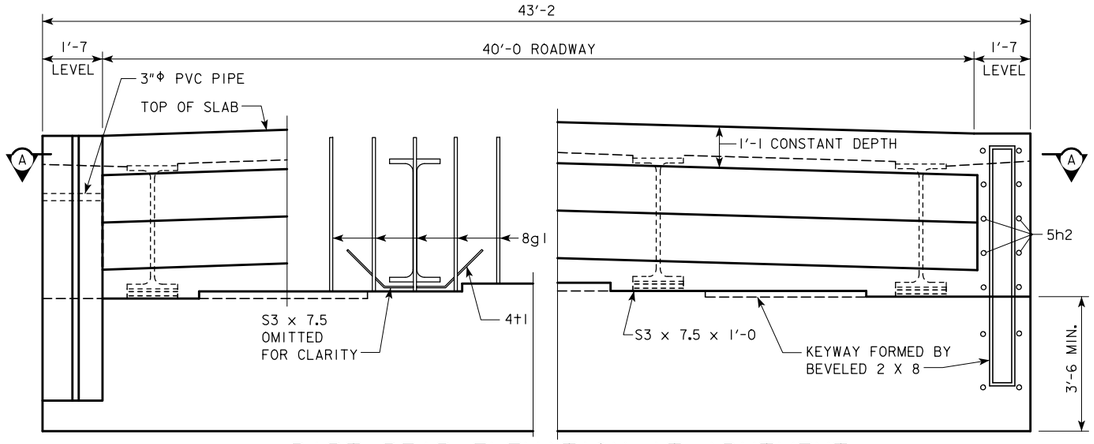

PART REAR ELEVATION AT ABUTMENT

ABUTMENT PILE SPACING

DIMENSION OR NO.	℄ TO ℄ ABUTMENT BEARING								
	160'-0	180'-0	200'-0	220'-0	240'-0	260'-0	280'-0	300'-0	320'-0
"A"	8	8	8	8	9	9	9	9	10
"B" (FT-IN)	6'-10 1/2	6'-10 1/2	6'-10 1/2	6'-10 1/2	6'-1 5/16	6'-1 5/16	6'-1 5/16	6'-1 5/16	5'-6
"C" EQUAL SPACES	5	5	5	5	5	5	5	5	4
NO. OF PILES PER ABUT.	9	9	9	9	10	10	10	10	11
PU, STRENGTH I DESIGN LOAD (KIPS)	124	129	135	141	130	136	140	145	132

NOTE: HP 10 x 57 STEEL BEARING PILING REQUIRED.
NOTE: PU, STRENGTH I DESIGN LOAD (KIPS) IS NOT THE VALUE USED IN THE FIELD FOR DRIVING PILES.

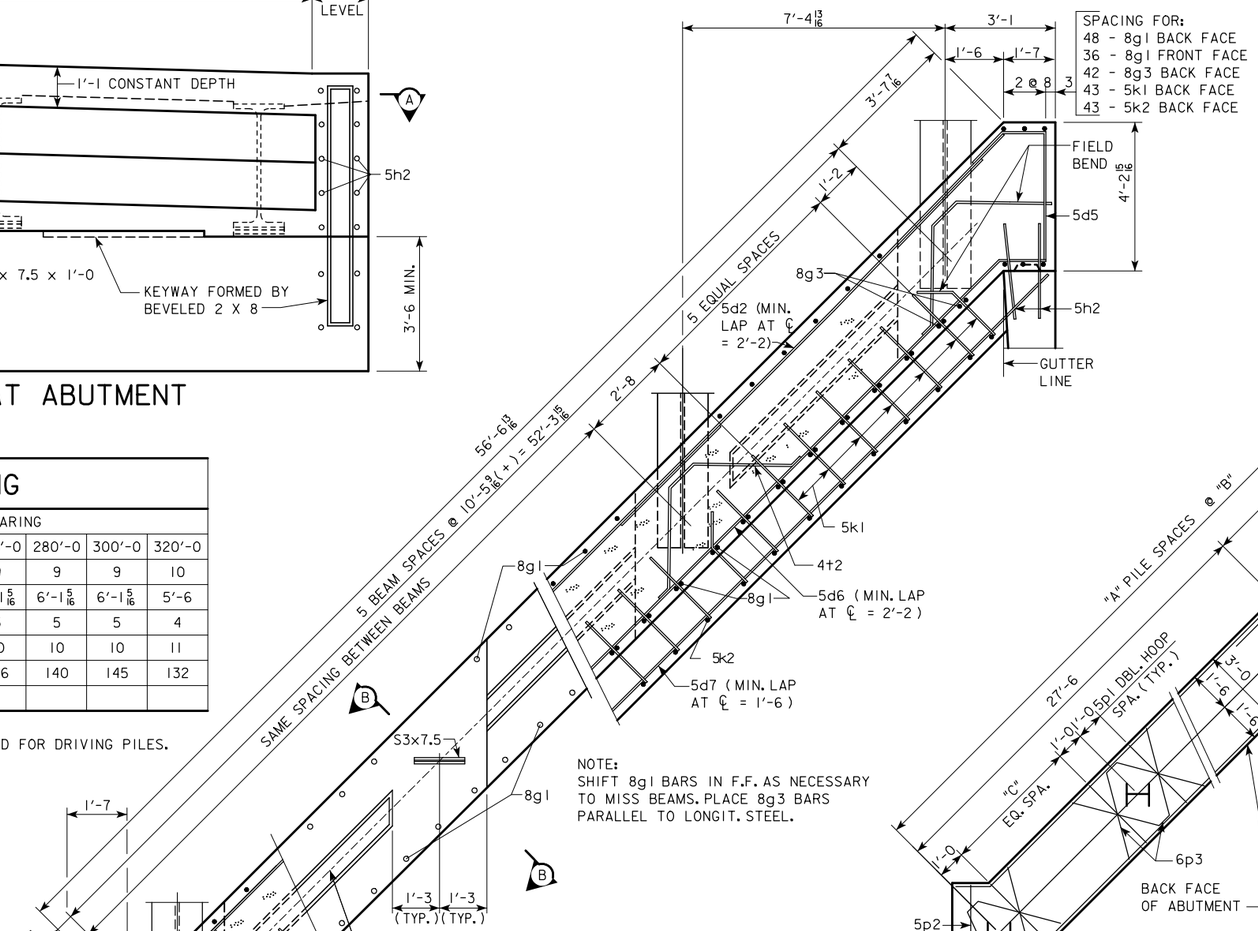

NOTE:
SHIFT 8g1 BARS IN F.F. AS NECESSARY TO MISS BEAMS. PLACE 8g3 BARS PARALLEL TO LONGIT. STEEL.

PART
SECTION A-A

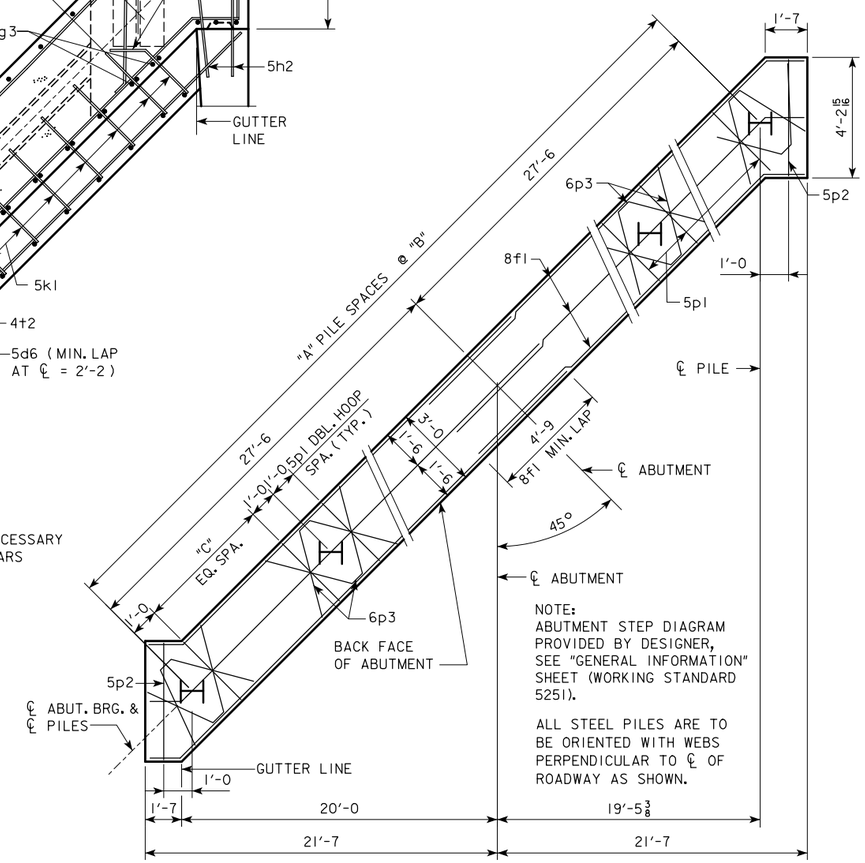

NOTE:
ABUTMENT STEP DIAGRAM PROVIDED BY DESIGNER, SEE "GENERAL INFORMATION" SHEET (WORKING STANDARD 5251).

ALL STEEL PILES ARE TO BE ORIENTED WITH WEBS PERPENDICULAR TO ℄ OF ROADWAY AS SHOWN.

ABUTMENT PILE PLAN

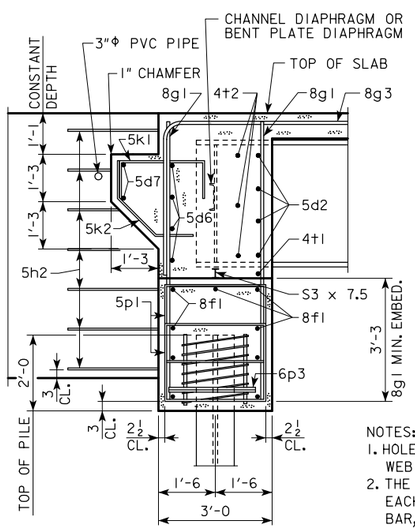

PART SECTION B-B

NOTES:
1. HOLES DRILLED THROUGH BEAM WEB FOR 5d2 AND 4t2 BARS.
2. THE SPIRAL AT THE TOP OF EACH PILE TO BE 7 TURNS OF No. 2 BAR, 21" DIAMETER, 3" PITCH WITH 3 - 1 7/8 x 7/8 x 1/8 SPACERS PUNCHED TO HOLD SPIRAL.

ABUTMENT NOTES:

MINIMUM CLEAR DISTANCE FROM FACE OF CONCRETE TO NEAR REINFORCING BAR IS TO BE 2" UNLESS OTHERWISE NOTED OR SHOWN.

IF NECESSARY TO PREVENT DAMAGE TO THE END OF THE BRIDGE DECK OR BACKWALL FROM CONSTRUCTION EQUIPMENT, AN APPROPRIATE METHOD OF PROTECTION APPROVED BY THE ENGINEER SHALL BE PROVIDED BY THE BRIDGE CONTRACTOR AT NO EXTRA COST TO THE COUNTY OR STATE. ABUTMENT PILES SHALL BE DRIVEN TO VALUES SHOWN IN DESIGN PLANS.

PLACE 5h2 BAR AT 1:6 SLOPE TO MATCH TRAFFIC SIDE OF ABUTMENT WING FACE. (BOTH SIDES TYPICAL)

BARRIER RAIL NOT SHOWN IN DETAILS.

IF ROCK IS CLOSER THAN 15' BELOW ABUTMENT FOOTING, SPECIAL ANALYSIS MAY BE REQUIRED.

LATEST REVISION DATE

APPROVED BY BRIDGE ENGINEER

IOWA DOT Highway Division

STANDARD DESIGN - 40' ROADWAY, 3 SPAN BRIDGES

ROLLED STEEL BEAM BRIDGES

OCTOBER, 2014

ABUTMENT DETAILS
45° SKEW

RS40-015-14

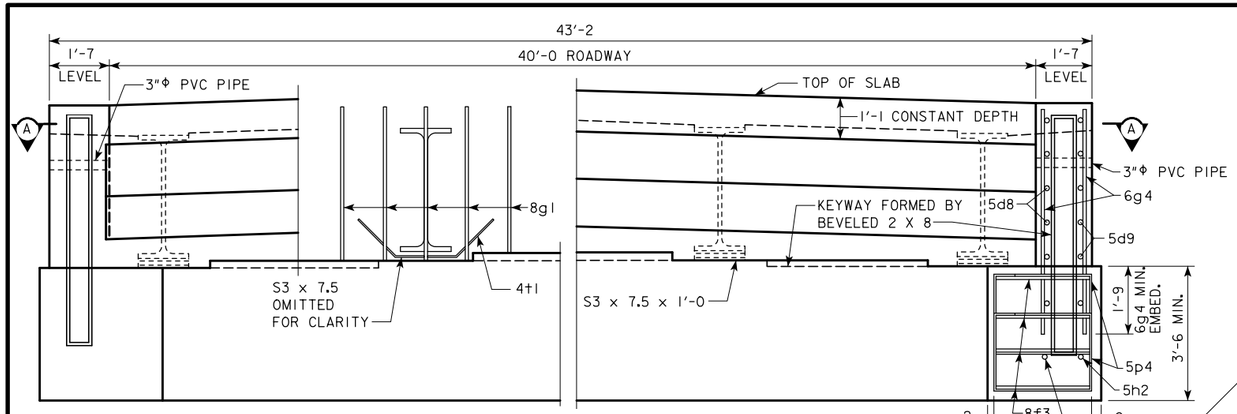

PART REAR ELEVATION AT ABUTMENT

(WINGS NOT SHOWN)

ABUTMENT PILE SPACING

DIMENSION OR NO.	℄ TO ℄ ABUTMENT BEARING
	340'-0
"A"	10
"B" (FT-IN)	5'-6
"C" EQUAL SPACES	4
NO. OF PILES PER ABUT.	13
PU, STRENGTH I DESIGN LOAD (KIPS)	137

NOTE: HP 10 x 57 STEEL BEARING PILING REQUIRED.
NOTE: PU, STRENGTH I DESIGN LOAD (KIPS) IS NOT THE VALUE USED IN THE FIELD FOR DRIVING PILES.

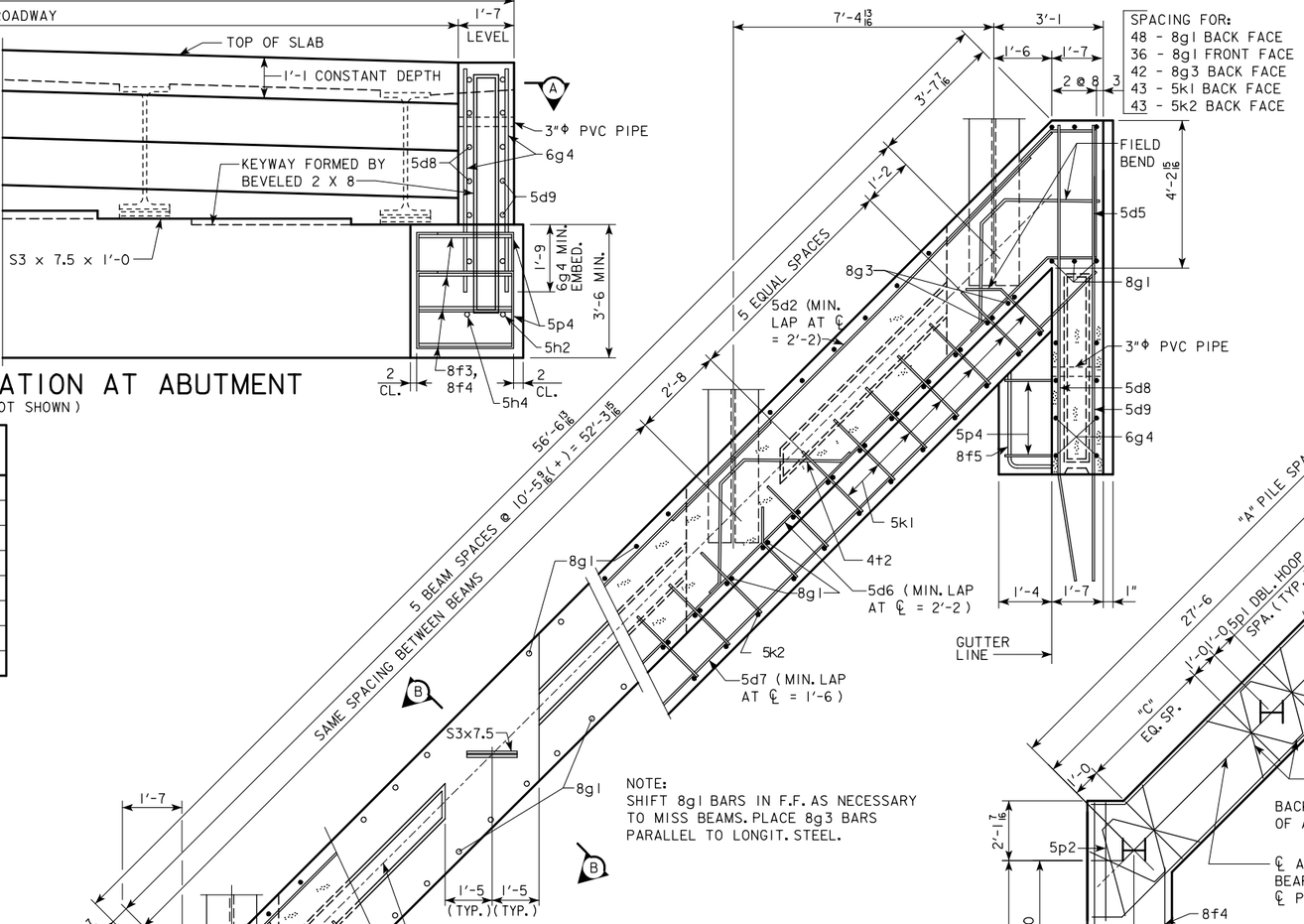

PART SECTION A-A

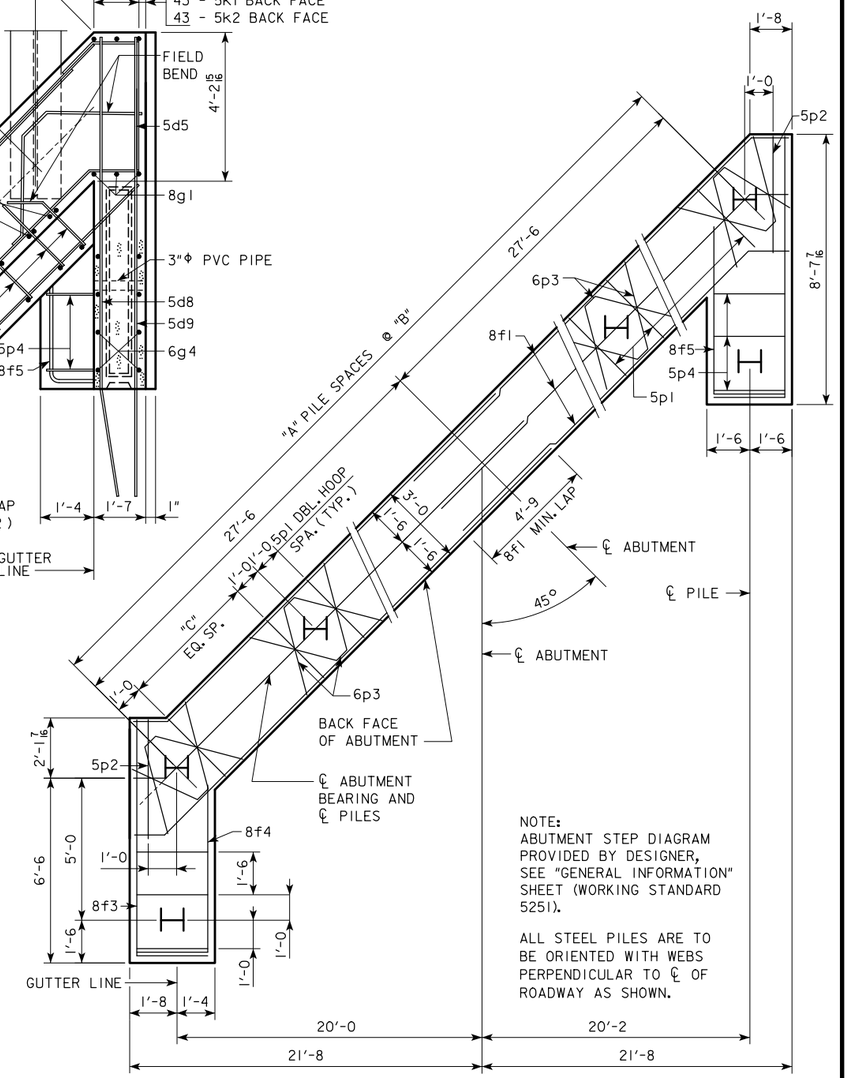

NOTE:
ABUTMENT STEP DIAGRAM PROVIDED BY DESIGNER, SEE "GENERAL INFORMATION" SHEET (WORKING STANDARD 5251).

ALL STEEL PILES ARE TO BE ORIENTED WITH WEBS PERPENDICULAR TO ℄ OF ROADWAY AS SHOWN.

ABUTMENT PILE PLAN

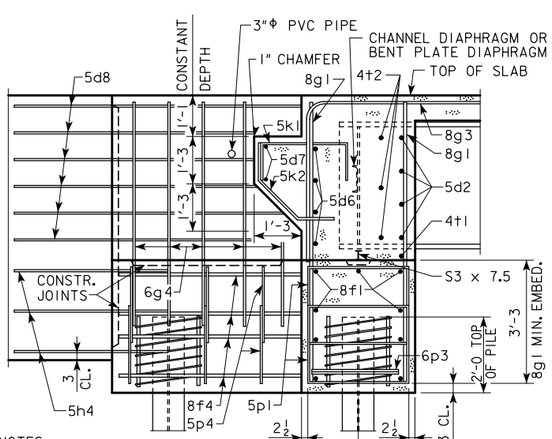

NOTES:
1. HOLES DRILLED THROUGH BEAM WEB FOR 5d2 AND 4t2 BARS.
2. THE SPIRAL AT THE TOP OF EACH PILE TO BE 7 TURNS OF No. 2 BAR, 21" DIAMETER, 3" PITCH WITH 3 - L 7/8 x 7/8 x 1/8 SPACERS PUNCHED TO HOLD SPIRAL.

FIELD BEND 5h4 BAR AS NECESSARY TO AVOID PILE IN ABUTMENT WING.

PART SECTION B-B

ABUTMENT NOTES:

MINIMUM CLEAR DISTANCE FROM FACE OF CONCRETE TO NEAR REINFORCING BAR IS TO BE 2" UNLESS OTHERWISE NOTED OR SHOWN.

IF NECESSARY TO PREVENT DAMAGE TO THE END OF THE BRIDGE DECK OR BACKWALL FROM CONSTRUCTION EQUIPMENT, AN APPROPRIATE METHOD OF PROTECTION APPROVED BY THE ENGINEER SHALL BE PROVIDED BY THE BRIDGE CONTRACTOR AT NO EXTRA COST TO THE COUNTY OR STATE. ABUTMENT PILES SHALL BE DRIVEN TO VALUES SHOWN IN DESIGN PLANS.

BARRIER RAIL NOT SHOWN IN DETAILS.

IF ROCK IS CLOSER THAN 15' BELOW ABUTMENT FOOTING, SPECIAL ANALYSIS MAY BE REQUIRED.

LATEST REVISION DATE

APPROVED BY BRIDGE ENGINEER

IOWA DOT Highway Division

STANDARD DESIGN - 40' ROADWAY, 3 SPAN BRIDGES

ROLLED STEEL BEAM BRIDGES

OCTOBER, 2014

ABUTMENT DETAILS 45° SKEW

RS40-016-14

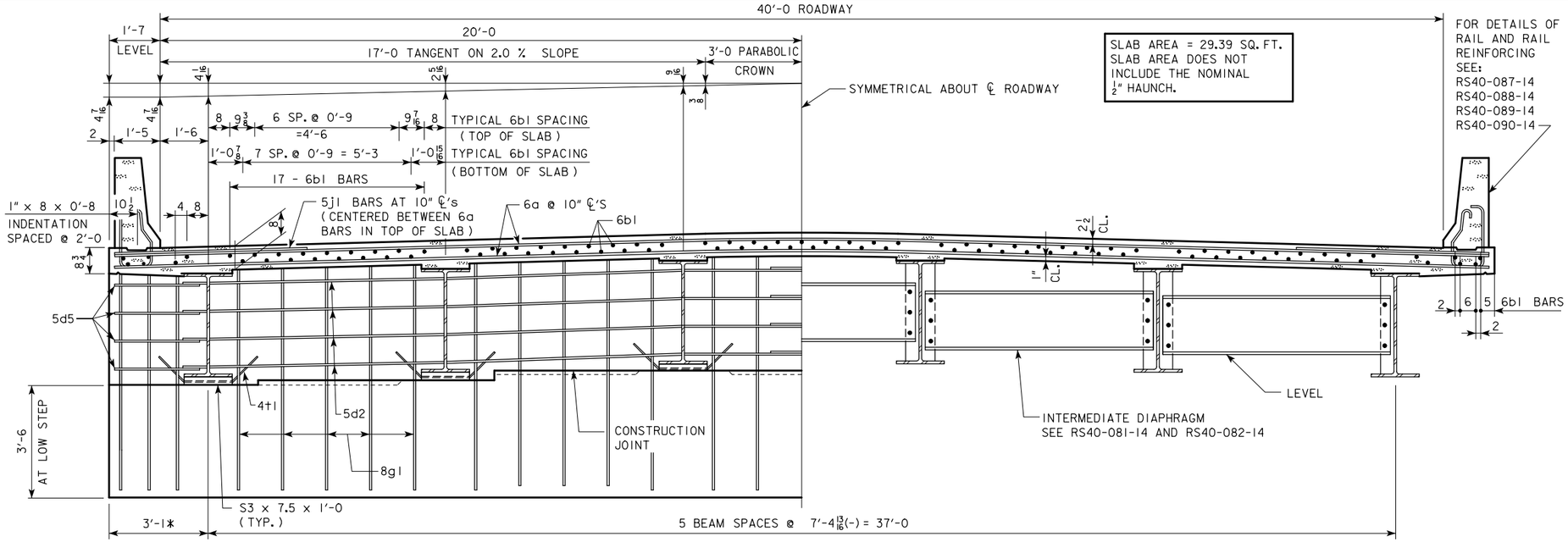

SLAB AREA = 29.39 SQ. FT.
SLAB AREA DOES NOT INCLUDE THE NOMINAL 1/2" HAUNCH.

FOR DETAILS OF RAIL AND RAIL REINFORCING SEE:
RS40-087-14
RS40-088-14
RS40-089-14
RS40-090-14

SUPERSTRUCTURE NOTES:

THE FLOOR SLAB AS SHOWN INCLUDES 1/2" INTEGRAL WEARING SURFACE.

FORMS FOR THE SLAB AND BARRIER RAIL ARE TO BE SUPPORTED BY THE BEAMS.

CLEAR DISTANCE FROM FACE OF CONCRETE TO NEAR REINFORCING BAR SHALL BE 2 INCHES UNLESS OTHERWISE NOTED OR SHOWN.

TOP TRANSVERSE REINFORCING STEEL IS TO BE PARALLEL TO AND 2 1/2" CLEAR BELOW TOP OF SLAB. BOTTOM TRANSVERSE REINFORCING STEEL IS TO BE PARALLEL TO AND 1" CLEAR ABOVE BOTTOM OF SLAB. TOP AND BOTTOM REINFORCING STEEL IS TO BE SUPPORTED BY INDIVIDUAL BAR CHAIRS SPACED AT NOT MORE THAN 3'-0 CENTERS LONGITUDINALLY AND TRANSVERSELY, OR BY CONTINUOUS ROWS OF BAR HIGH CHAIRS OR SLAB BOLSTERS SPACED 4'-0 APART. I.M. 451.01 REQUIREMENTS SHALL APPLY FOR BAR CHAIRS, BAR HIGH CHAIRS, AND SLAB BOLSTERS.

TRANSVERSE SLAB REINFORCING MAY BE SPLICED WITH ONE LAP LOCATED AS FOLLOWS: TOP BARS - LAP MIDWAY BETWEEM BEAMS (MIN. LAP = 1'-10). BOTTOM BARS - LAP OVER GIRDERS (MIN. LAP = 1'-10). PAYMENT FOR REINFORCING BARS SHALL BE BASED ON NO SPLICES, AND NO ALLOWANCE SHALL BE MADE FOR THE ADDITIONAL LENGTH OF BAR REQUIRED FOR THE USE OF SPLICES.

THE ABUTMENT DIAPHRAGM CONCRETE IS TO BE PLACED MONOLITHICALLY WITH THE FLOOR SLAB.

*3'-2 FOR 340'-0 BRIDGE

HALF SECTION NEAR ABUTMENT

NOTE:
STEEL ABUTMENT DIAPHRAGMS OMITTED FOR CLARITY. SEE RS40-081-14 AND RS40-082-14

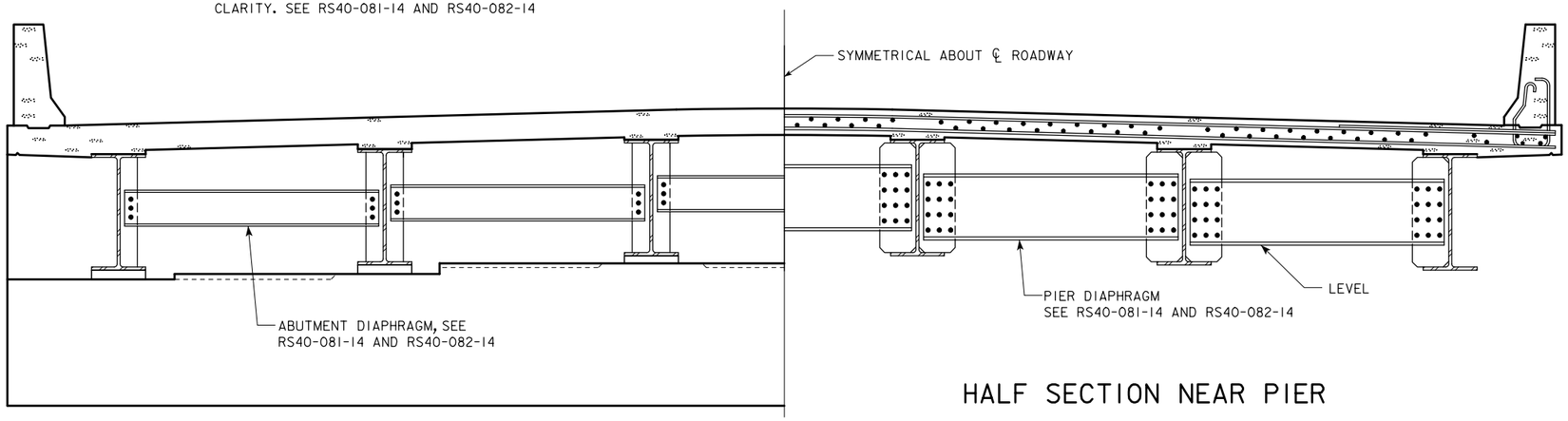

HALF SECTION NEAR INTERMEDIATE DIAPHRAGM

HALF SECTION NEAR PIER

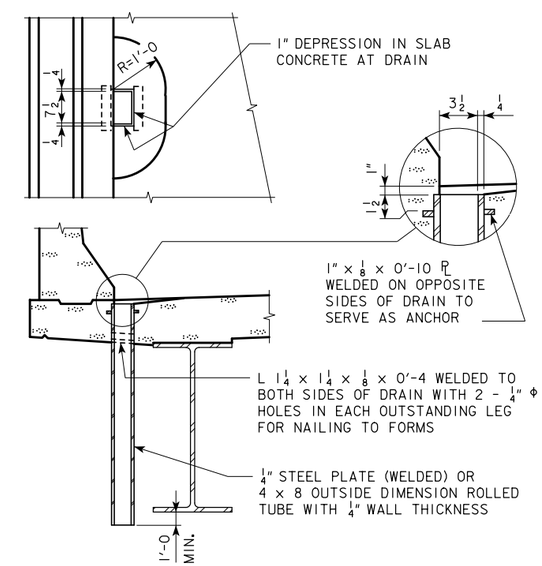

HALF SECTION NEAR ABUTMENT

NOTE:
REINFORCING OMITTED FOR CLARITY. FOR BEAM CAMBER AND THEORETICAL CONCRETE HAUNCH DIAGRAM, SEE MISC. DETAILS WORK SHEET FOR APPROPRIATE LENGTH BRIDGE.

DRAIN DETAIL NOTE:
DRAINS ARE TO BE GALVANIZED. FOR NUMBER OF DRAINS REQUIRED AND LOCATION SEE "GENERAL INFORMATION SHEET" (WORKING STANDARD 5251). WEIGHT OF DRAINS IS SHOWN ON THE SUMMARY QUANTITIES SHEET IN THE BRIDGE PLANS

DATA FOR ONE DRAIN

BEAM SIZE	W30	W33	W36	W40	W44
WT. LBS.	82	87	92	96	105
LENGTH FT.	4'-3	4'-7	4'-9	5'-0	5'-5

LATEST REVISION DATE

APPROVED BY BRIDGE ENGINEER

IOWADOT Highway Division

STANDARD DESIGN - 40' ROADWAY, 3 SPAN BRIDGES

ROLLED STEEL BEAM BRIDGES

OCTOBER, 2014

SYMMETRICAL CROSS SECTIONS 160'-0-340'-0 SPANS

RS40-017-14

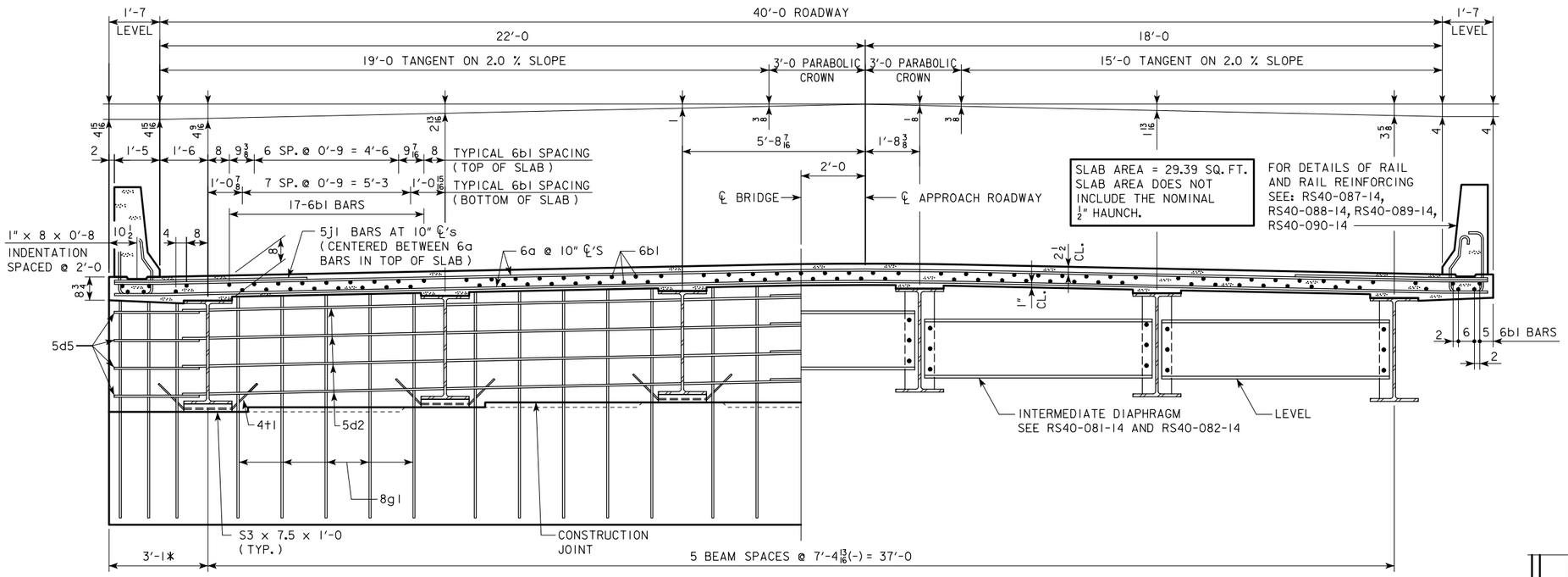

*3'-2 FOR 340'-0 BRIDGE

HALF SECTION NEAR ABUTMENT

NOTE:
STEEL ABUTMENT DIAPHRAGMS OMITTED FOR CLARITY. SEE RS40-081-14 AND RS40-082-14

HALF SECTION NEAR INTERMEDIATE DIAPHRAGM

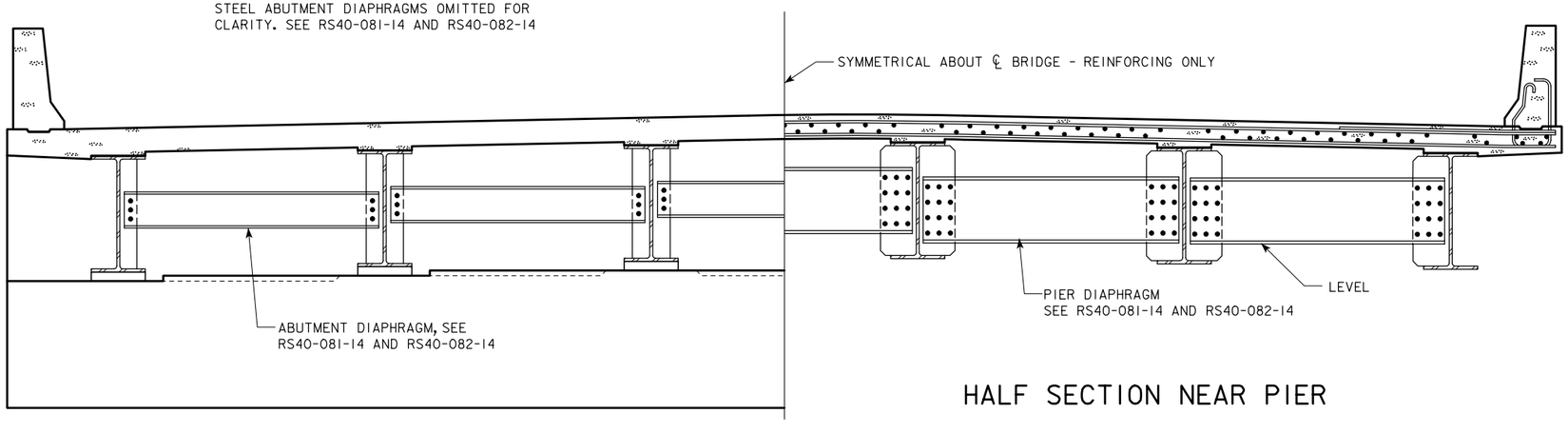

HALF SECTION NEAR PIER

HALF SECTION NEAR ABUTMENT

NOTE:
REINFORCING OMITTED FOR CLARITY. FOR BEAM CAMBER AND THEORETICAL CONCRETE HAUNCH DIAGRAM, SEE MISC. DETAILS WORK SHEET FOR APPROPRIATE LENGTH BRIDGE.

SUPERSTRUCTURE NOTES:

THE FLOOR SLAB AS SHOWN INCLUDES 1/2" INTEGRAL WEARING SURFACE.

FORMS FOR THE SLAB AND BARRIER RAIL ARE TO BE SUPPORTED BY THE BEAMS.

CLEAR DISTANCE FROM FACE OF CONCRETE TO NEAR REINFORCING BAR SHALL BE 2 INCHES UNLESS OTHERWISE NOTED OR SHOWN.

TOP TRANSVERSE REINFORCING STEEL IS TO BE PARALLEL TO AND 2 1/2" CLEAR BELOW TOP OF SLAB. BOTTOM TRANSVERSE REINFORCING STEEL IS TO BE PARALLEL TO AND 1" CLEAR ABOVE BOTTOM OF SLAB. TOP AND BOTTOM REINFORCING STEEL IS TO BE SUPPORTED BY INDIVIDUAL BAR CHAIRS SPACED AT NOT MORE THAN 3'-0 CENTERS LONGITUDINALLY AND TRANSVERSELY, OR BY CONTINUOUS ROWS OF BAR HIGH CHAIRS OR SLAB BOLSTERS SPACED 4'-0 APART. I.M. 451.01 REQUIREMENTS SHALL APPLY FOR BAR CHAIRS, BAR HIGH CHAIRS, AND SLAB BOLSTERS.

TRANSVERSE SLAB REINFORCING MAY BE SPLICED WITH ONE LAP LOCATED AS FOLLOWS: TOP BARS - LAP MIDWAY BETWEEM BEAMS (MIN. LAP = 1'-10). BOTTOM BARS - LAP OVER GIRDERS (MIN. LAP = 1'-10). PAYMENT FOR REINFORCING BARS SHALL BE BASED ON NO SPLICES, AND NO ALLOWANCE SHALL BE MADE FOR THE ADDITIONAL LENGTH OF BAR REQUIRED FOR THE USE OF SPLICES.

THE ABUTMENT DIAPHRAGM CONCRETE IS TO BE PLACED MONOLITHICALLY WITH THE FLOOR SLAB.

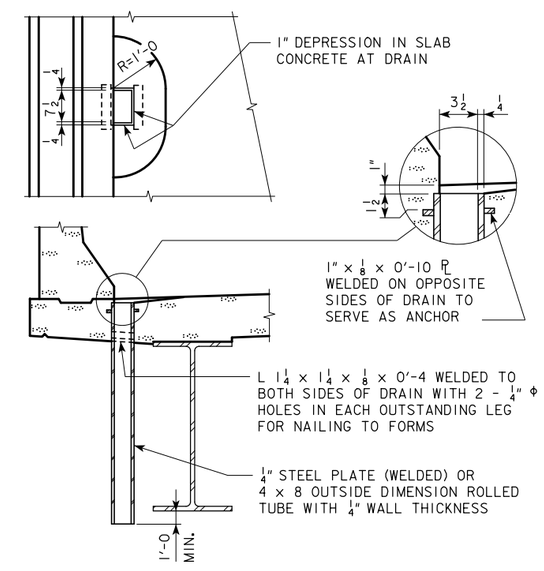

DRAIN DETAIL NOTE:
DRAINS ARE TO BE GALVANIZED. FOR NUMBER OF DRAINS REQUIRED AND LOCATION SEE "GENERAL INFORMATION SHEET" (WORKING STANDARD 5251). WEIGHT OF DRAINS IS SHOWN ON THE SUMMARY QUANTITIES SHEET IN THE BRIDGE PLANS

DATA FOR ONE DRAIN

BEAM SIZE	W30	W33	W36	W40	W44
WT. LBS.	82	87	92	96	105
LENGTH FT.	4'-3	4'-7	4'-9	5'-0	5'-5

LATEST REVISION DATE

APPROVED BY BRIDGE ENGINEER

IOWADOT Highway Division

STANDARD DESIGN - 40' ROADWAY, 3 SPAN BRIDGES

ROLLED STEEL BEAM BRIDGES

OCTOBER, 2014

UNSYMMETRICAL CROSS SECTIONS 160'-0-340'-0 SPANS

RS40-018-14

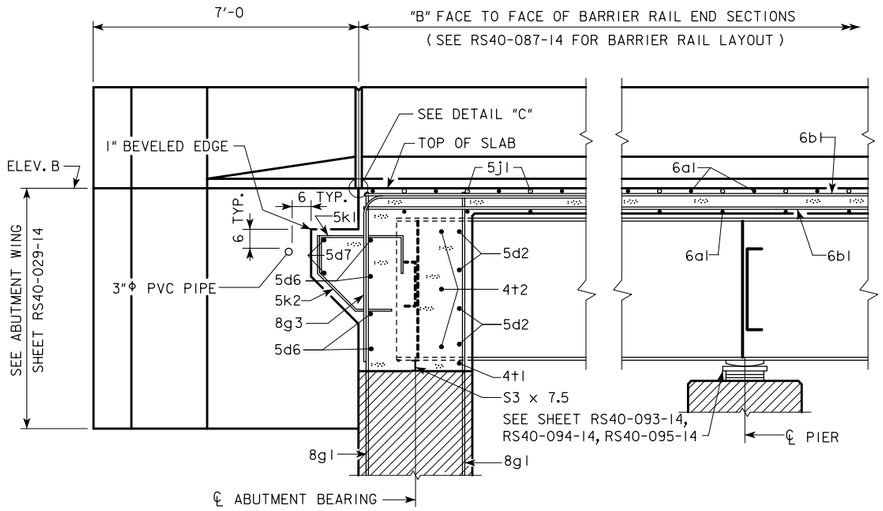

PART LONGITUDINAL SECTION NEAR GUTTER

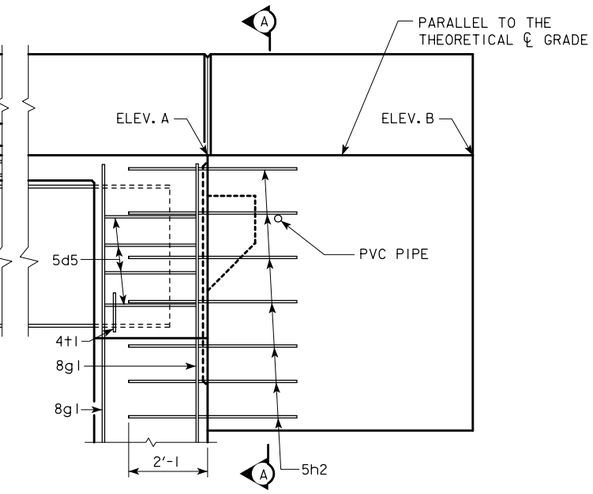

PART END VIEW AT ABUTMENT

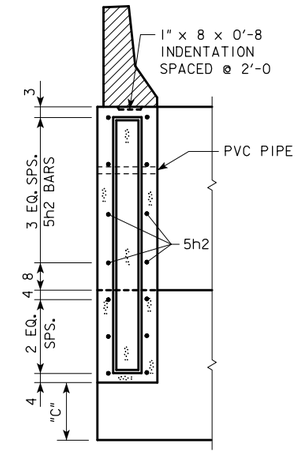

SECTION A-A

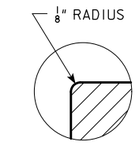

DETAIL "C"

NOTE:
PLUG 3"Φ PVC PIPE WITH EXPANDING FOAM PRIOR TO BACKFILLING BEHIND ABUTMENTS.

NOTE:
FOR ELEVATION A, ELEVATION B AND DIMENSION C SEE "MISCELLANEOUS DETAILS" FOR THE APPROPRIATE LENGTH BRIDGE.

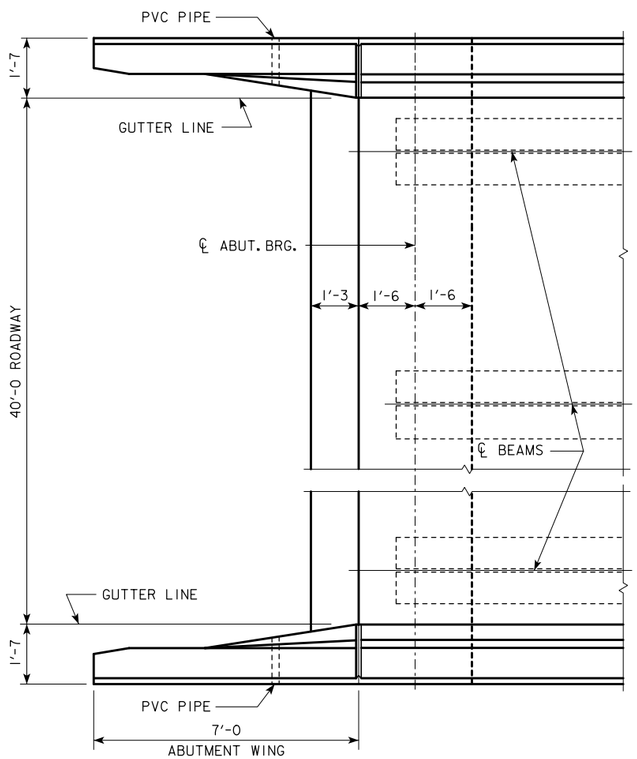

PART PLAN
(STEEL DIAPHRAGMS NOT SHOWN)

LATEST REVISION DATE	APPROVED BY BRIDGE ENGINEER	IOWA DOT Highway Division	
		STANDARD DESIGN - 40' ROADWAY, 3 SPAN BRIDGES ROLLED STEEL BEAM BRIDGES OCTOBER, 2014	
		LONGITUDINAL SECTION 0° SKEW	RS40-019-14

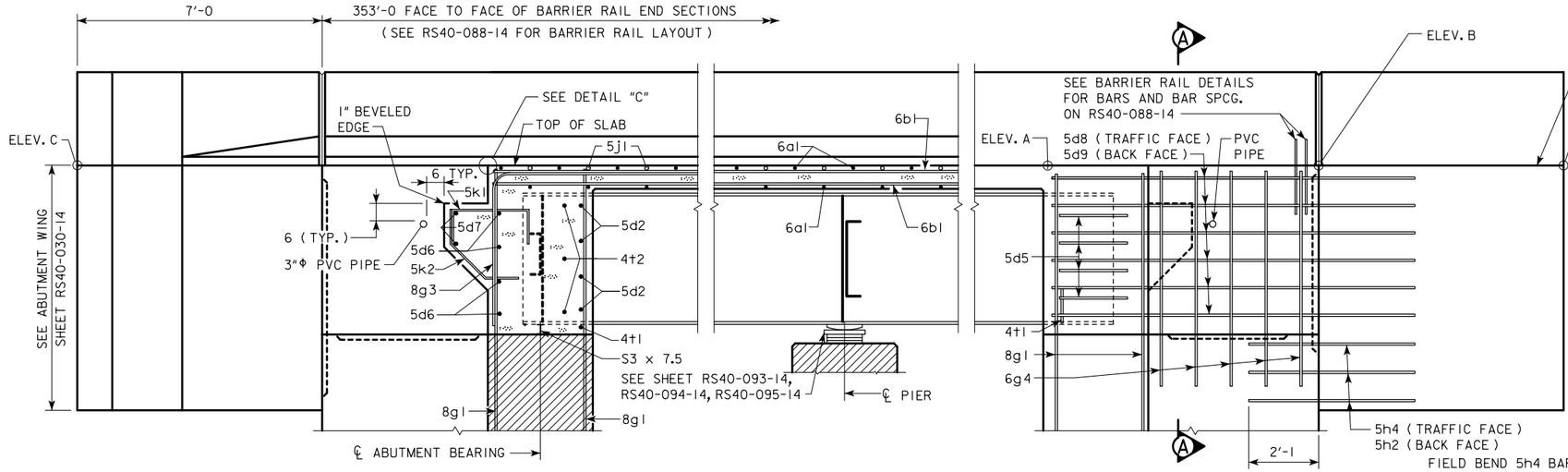

PART LONGITUDINAL SECTION NEAR GUTTER

PART END VIEW AT ABUTMENT

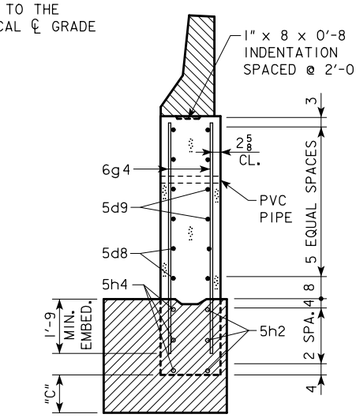

SECTION A-A

NOTE:
PLUG 3"Φ PVC PIPE WITH EXPANDING FOAM PRIOR TO BACKFILLING BEHIND ABUTMENTS.

NOTE:
FOR ELEVATION A, ELEVATION B, ELEVATION C AND DIMENSION C SEE "MISCELLANEOUS DETAILS" FOR THE APPROPRIATE LENGTH BRIDGE.

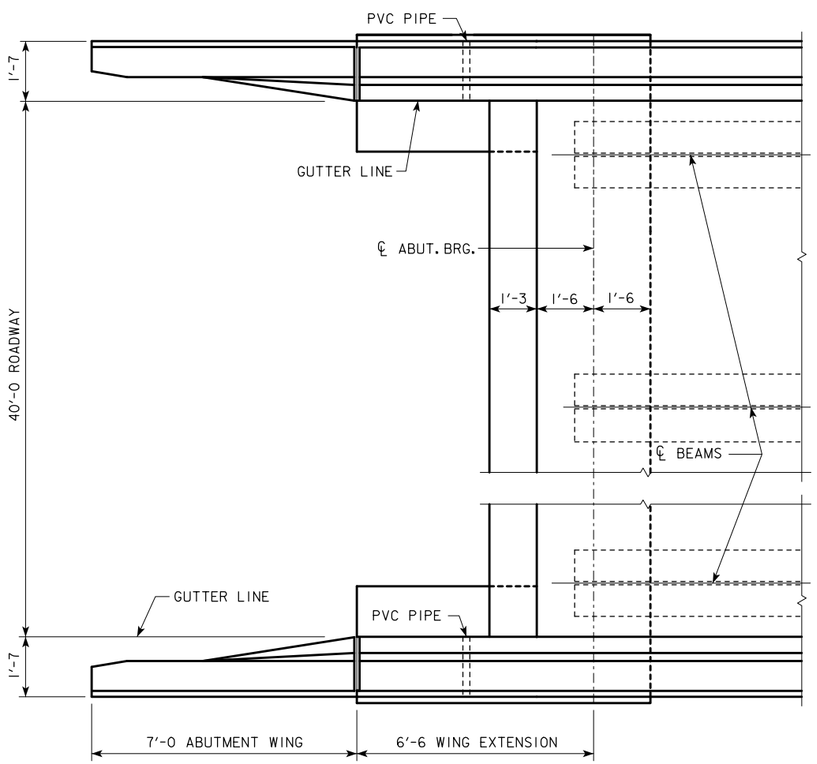

PART PLAN
(STEEL DIAPHRAGMS NOT SHOWN)

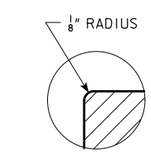

DETAIL "C"

LATEST REVISION DATE

APPROVED BY BRIDGE ENGINEER

IOWA DOT Highway Division

STANDARD DESIGN - 40' ROADWAY, 3 SPAN BRIDGES

ROLLED STEEL BEAM BRIDGES

OCTOBER, 2014

LONGITUDINAL SECTION 0° SKEW

RS40-020-14

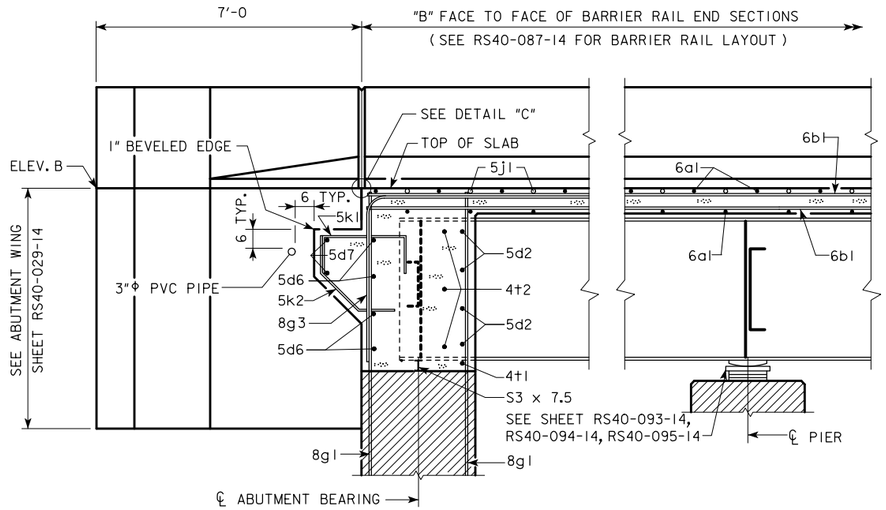

PART LONGITUDINAL SECTION NEAR GUTTER

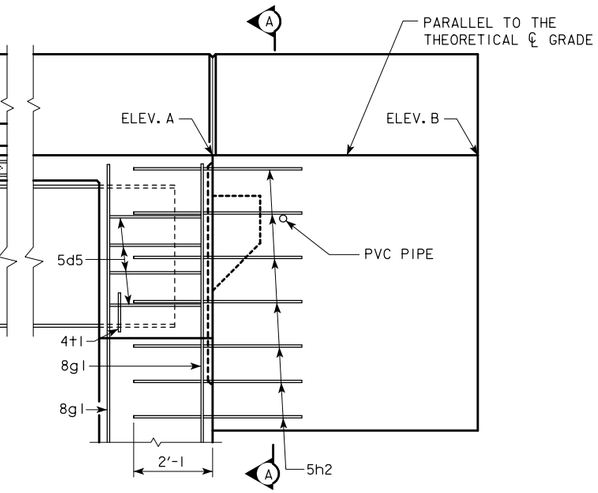

PART END VIEW AT ABUTMENT

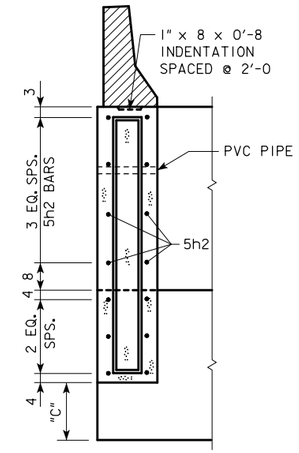

SECTION A-A

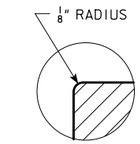

DETAIL "C"

NOTE:
PLUG 3"Φ PVC PIPE WITH EXPANDING FOAM PRIOR TO BACKFILLING BEHIND ABUTMENTS.

NOTE:
FOR ELEVATION A, ELEVATION B AND DIMENSION C SEE "MISCELLANEOUS DETAILS" FOR THE APPROPRIATE LENGTH BRIDGE.

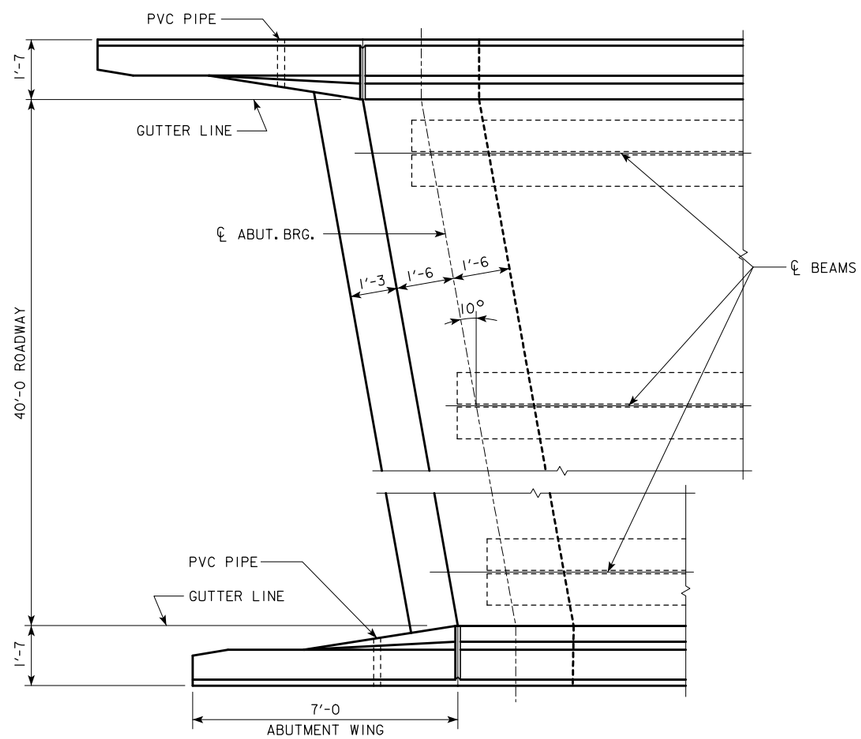

PART PLAN
(STEEL DIAPHRAGMS NOT SHOWN)

LATEST REVISION DATE

APPROVED BY BRIDGE ENGINEER

IOWA DOT Highway Division

STANDARD DESIGN - 40' ROADWAY, 3 SPAN BRIDGES

ROLLED STEEL BEAM BRIDGES

OCTOBER, 2014

LONGITUDINAL SECTION
10° SKEW

RS40-021-14

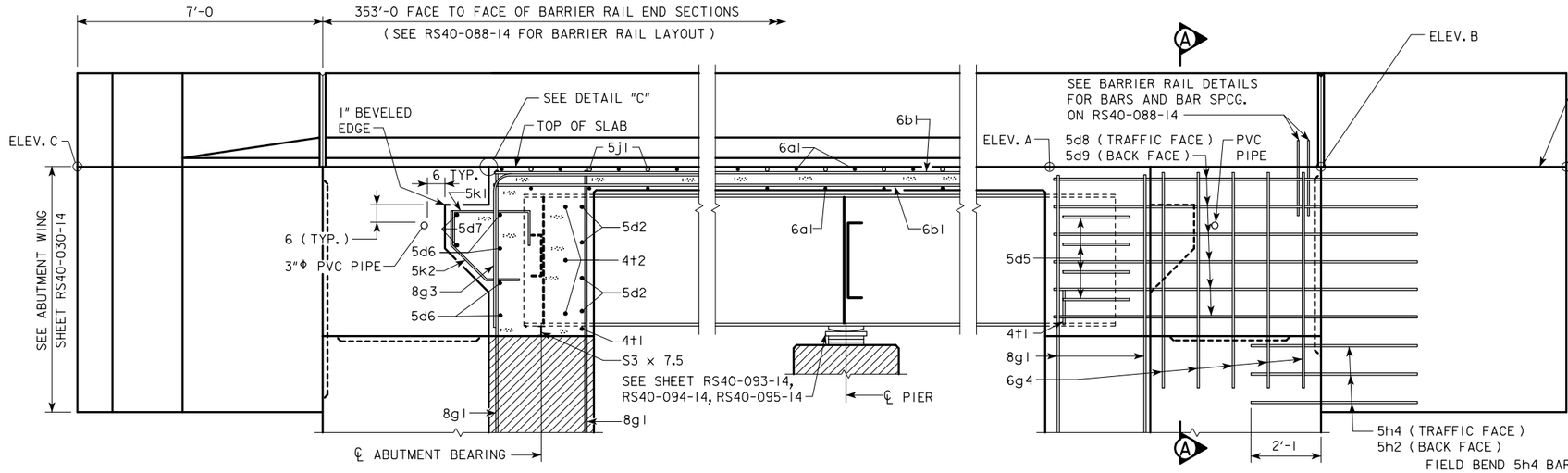

PART LONGITUDINAL SECTION NEAR GUTTER

PART END VIEW AT ABUTMENT

NOTE:
PLUG 3"Φ PVC PIPE WITH EXPANDING FOAM PRIOR TO BACKFILLING BEHIND ABUTMENTS.

NOTE:
FOR ELEVATION A, ELEVATION B, ELEVATION C AND DIMENSION C SEE "MISCELLANEOUS DETAILS" FOR THE APPROPRIATE LENGTH BRIDGE.

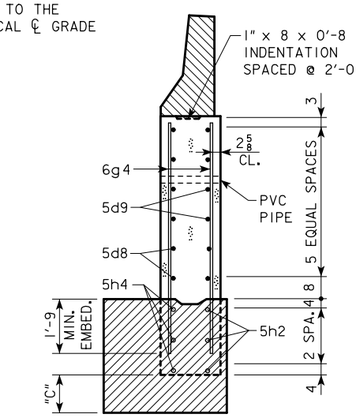

SECTION A-A

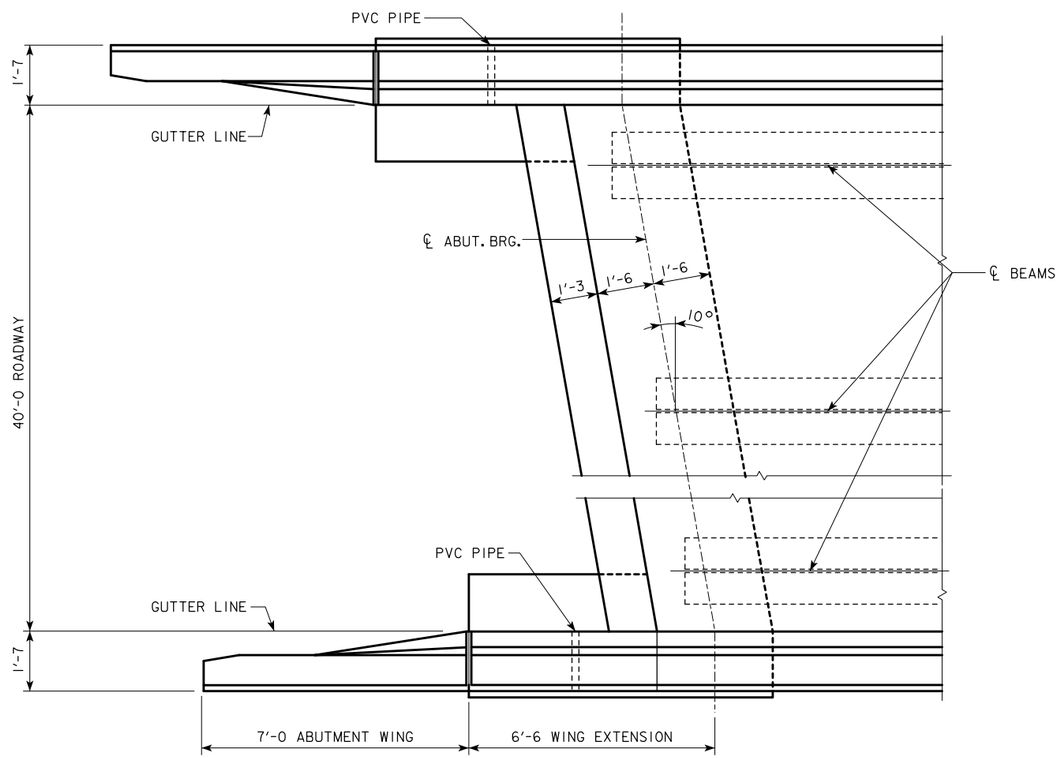

PART PLAN
(STEEL DIAPHRAGMS NOT SHOWN)

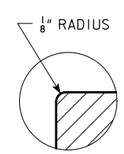

DETAIL "C"

LATEST REVISION DATE

APPROVED BY BRIDGE ENGINEER

IOWA DOT Highway Division

STANDARD DESIGN - 40' ROADWAY, 3 SPAN BRIDGES

ROLLED STEEL BEAM BRIDGES

OCTOBER, 2014

LONGITUDINAL SECTION
10° SKEW

RS40-022-14

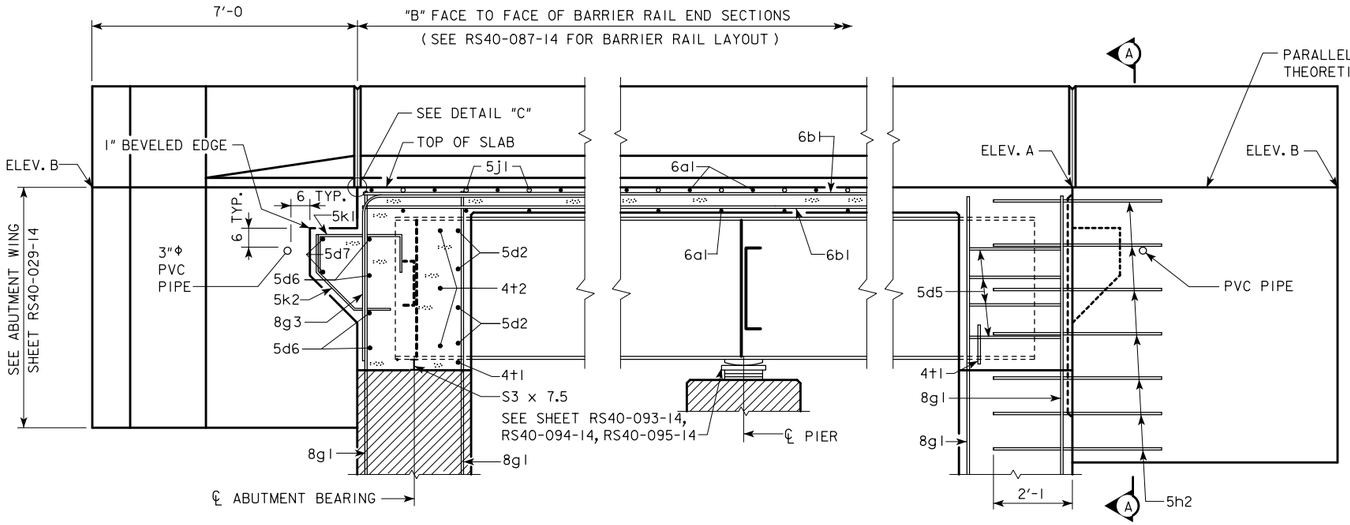

PART LONGITUDINAL SECTION NEAR GUTTER

PART END VIEW AT ABUTMENT

NOTE:
PLUG 3"Φ PVC PIPE WITH EXPANDING FOAM PRIOR TO BACKFILLING BEHIND ABUTMENTS.

NOTE:
FOR ELEVATION A, ELEVATION B AND DIMENSION C SEE "MISCELLANEOUS DETAILS" FOR THE APPROPRIATE LENGTH BRIDGE.

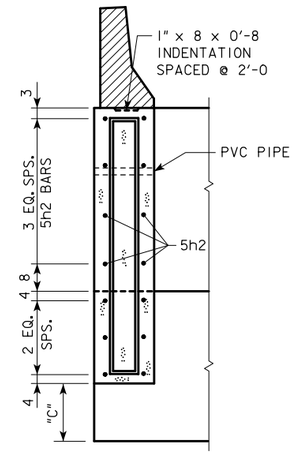

SECTION A-A

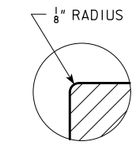

DETAIL "C"

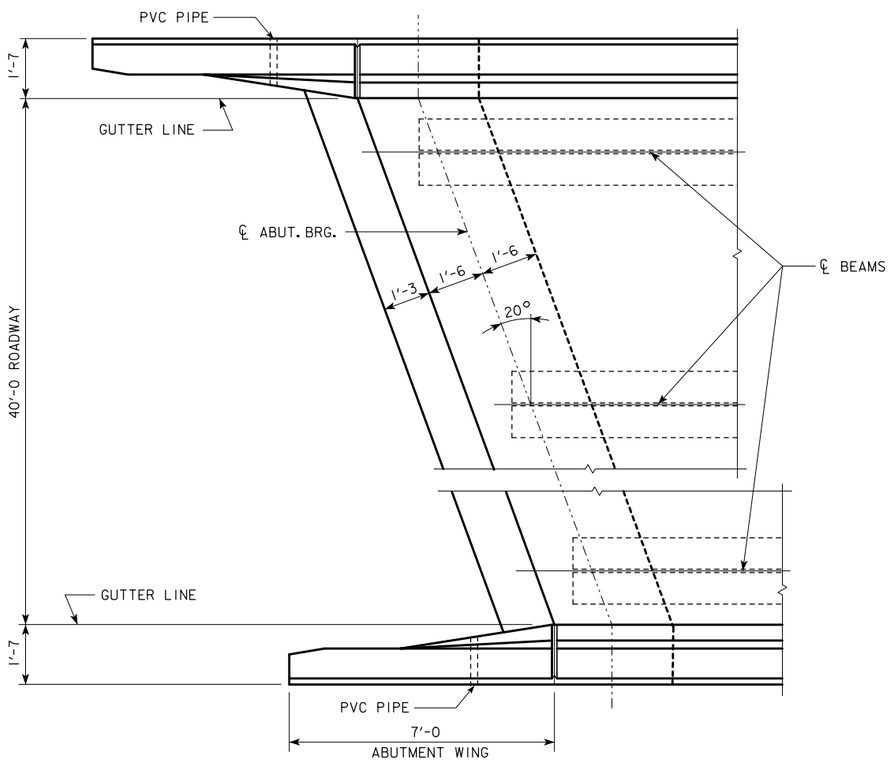

PART PLAN
(STEEL DIAPHRAGMS NOT SHOWN)

LATEST REVISION DATE

APPROVED BY BRIDGE ENGINEER

IOWA DOT Highway Division

STANDARD DESIGN - 40' ROADWAY, 3 SPAN BRIDGES

ROLLED STEEL BEAM BRIDGES

OCTOBER, 2014

LONGITUDINAL SECTION
20° SKEW

RS40-023-14

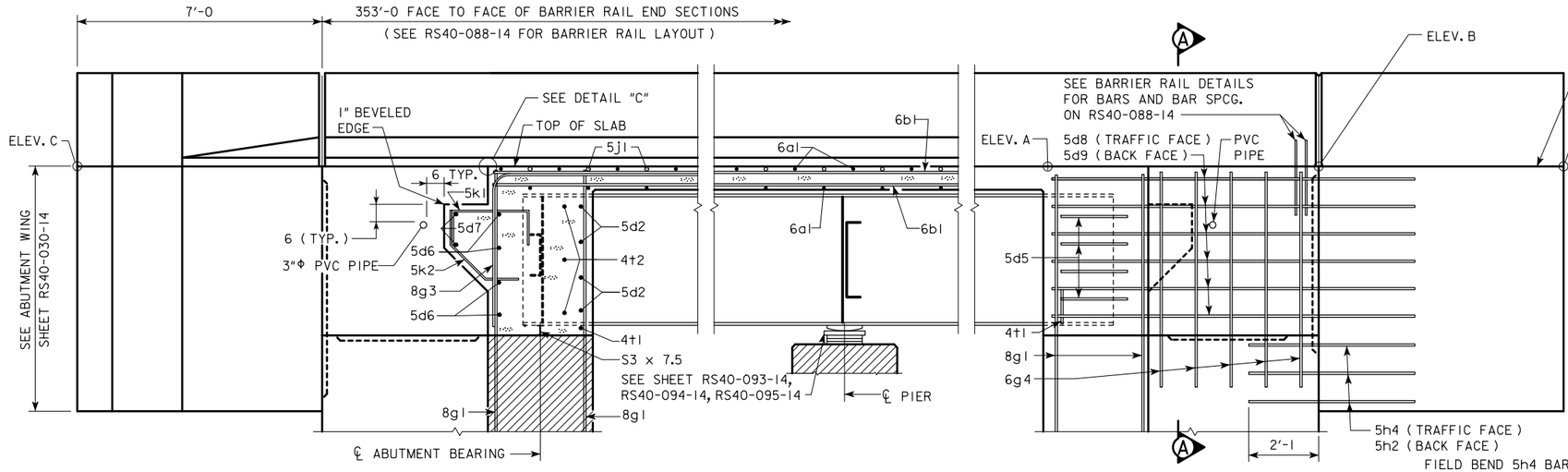

PART LONGITUDINAL SECTION NEAR GUTTER

NOTE:
PLUG 3"Φ PVC PIPE WITH EXPANDING FOAM PRIOR TO BACKFILLING BEHIND ABUTMENTS.

PART END VIEW AT ABUTMENT

NOTE:
FOR ELEVATION A, ELEVATION B, ELEVATION C AND DIMENSION C SEE "MISCELLANEOUS DETAILS" FOR THE APPROPRIATE LENGTH BRIDGE.

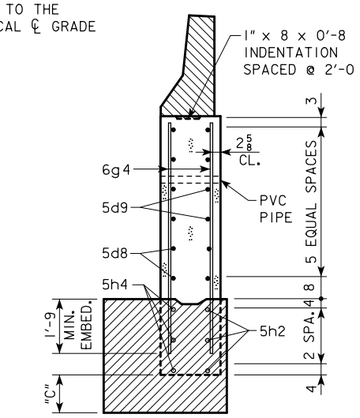

SECTION A-A

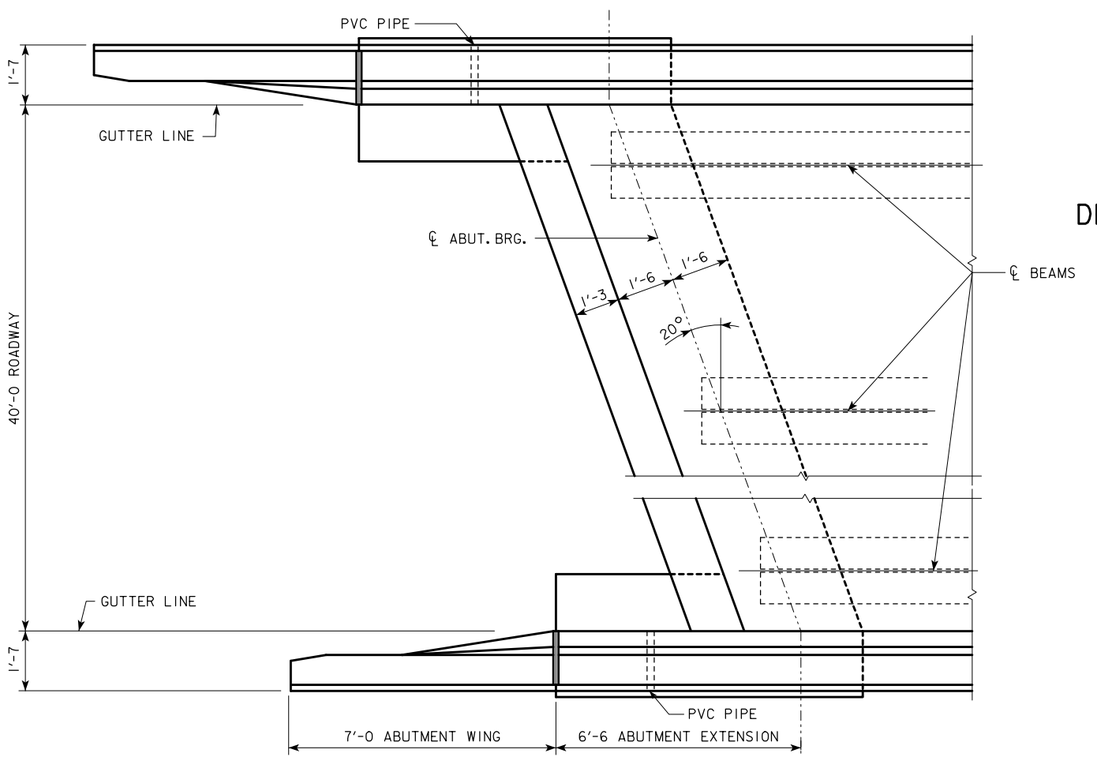

PART PLAN

(STEEL DIAPHRAGMS NOT SHOWN)

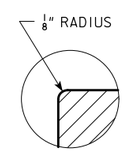

DETAIL "C"

LATEST REVISION DATE

APPROVED BY BRIDGE ENGINEER

IOWA DOT Highway Division

STANDARD DESIGN - 40' ROADWAY, 3 SPAN BRIDGES

ROLLED STEEL BEAM BRIDGES

OCTOBER, 2014

LONGITUDINAL SECTION 20° SKEW

RS40-024-14

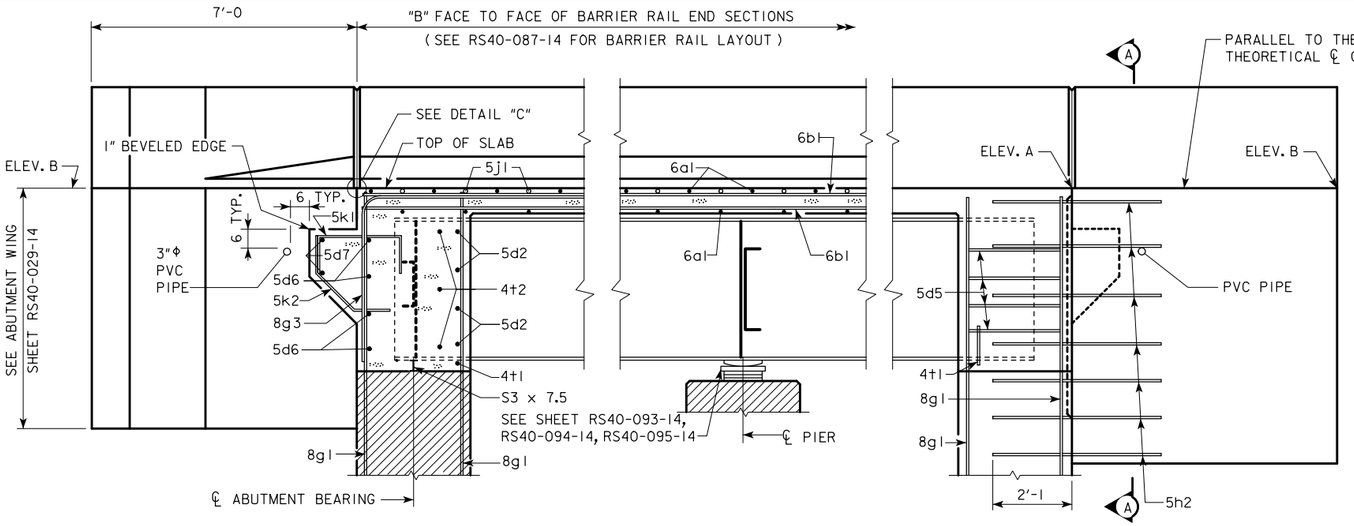

PART LONGITUDINAL SECTION NEAR GUTTER

PART END VIEW AT ABUTMENT

NOTE:
PLUG 3"Φ PVC PIPE WITH EXPANDING FOAM PRIOR TO BACKFILLING BEHIND ABUTMENTS.

NOTE:
FOR ELEVATION A, ELEVATION B AND DIMENSION C SEE "MISCELLANEOUS DETAILS" FOR THE APPROPRIATE LENGTH BRIDGE.

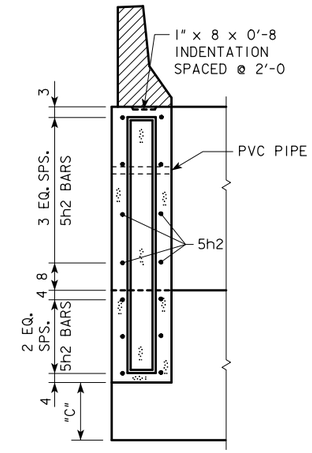

SECTION A-A

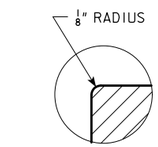

DETAIL "C"

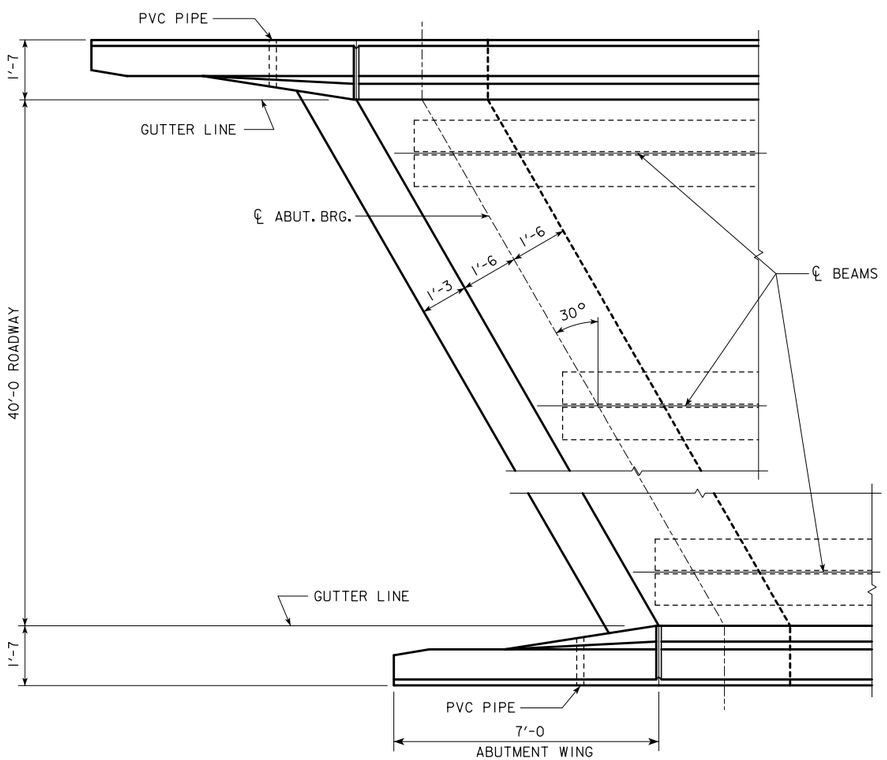

PART PLAN
(STEEL DIAPHRAGMS NOT SHOWN)

LATEST REVISION DATE	APPROVED BY BRIDGE ENGINEER	IOWA DOT Highway Division
		STANDARD DESIGN - 40' ROADWAY, 3 SPAN BRIDGES ROLLED STEEL BEAM BRIDGES OCTOBER, 2014
		LONGITUDINAL SECTION 30° SKEW — RS40-025-14

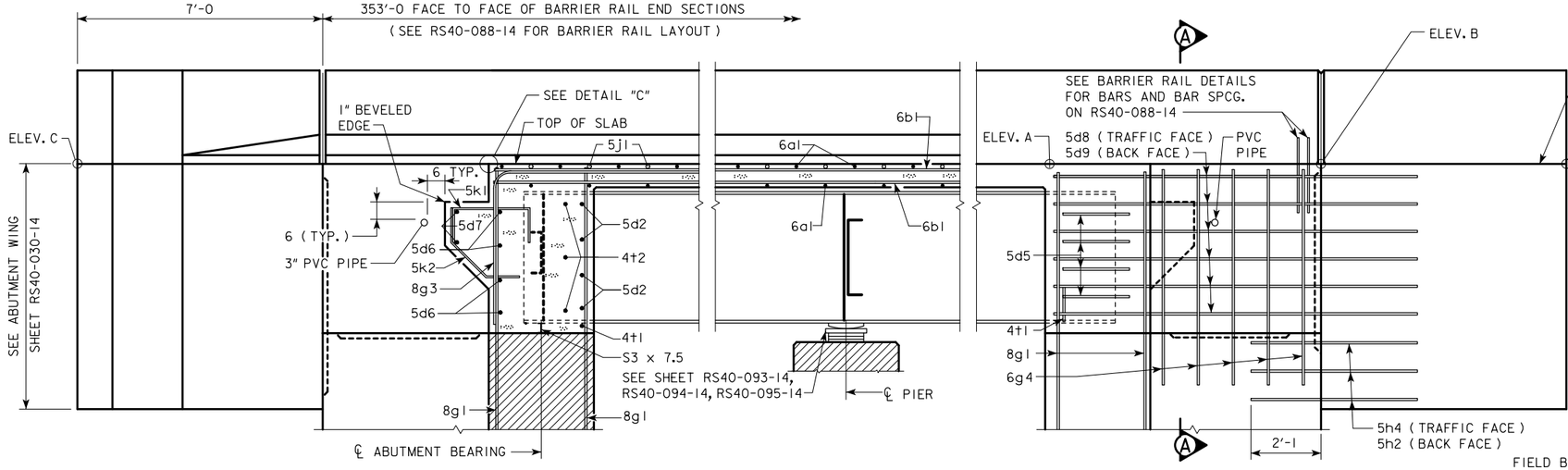

PART LONGITUDINAL SECTION NEAR GUTTER

NOTE:
PLUG 3"Φ PVC PIPE WITH EXPANDING FOAM PRIOR TO BACKFILLING BEHIND ABUTMENTS.

NOTE:
FOR ELEVATION A, ELEVATION B, ELEVATION C AND DIMENSION C SEE "MISCELLANEOUS DETAILS" FOR THE APPROPRIATE LENGTH BRIDGE.

PART END VIEW AT ABUTMENT

FIELD BEND 5h4 BAR AS NECESSARY TO AVOID PILE IN ABUTMENT WING.

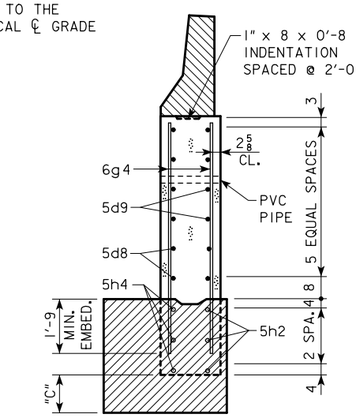

SECTION A-A

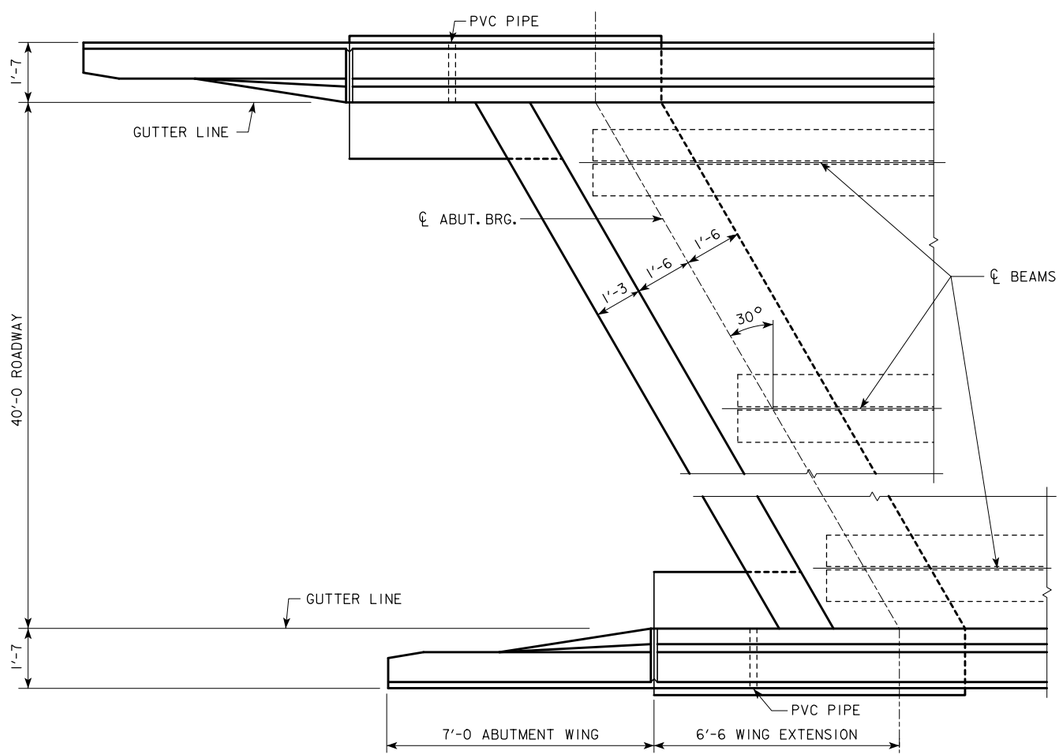

PART PLAN
(STEEL DIAPHRAGMS NOT SHOWN)

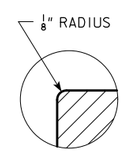

DETAIL "C"

LATEST REVISION DATE

APPROVED BY BRIDGE ENGINEER

IOWA DOT Highway Division

STANDARD DESIGN - 40' ROADWAY, 3 SPAN BRIDGES

ROLLED STEEL BEAM BRIDGES

OCTOBER, 2014

LONGITUDINAL SECTION 30° SKEW

RS40-026-14

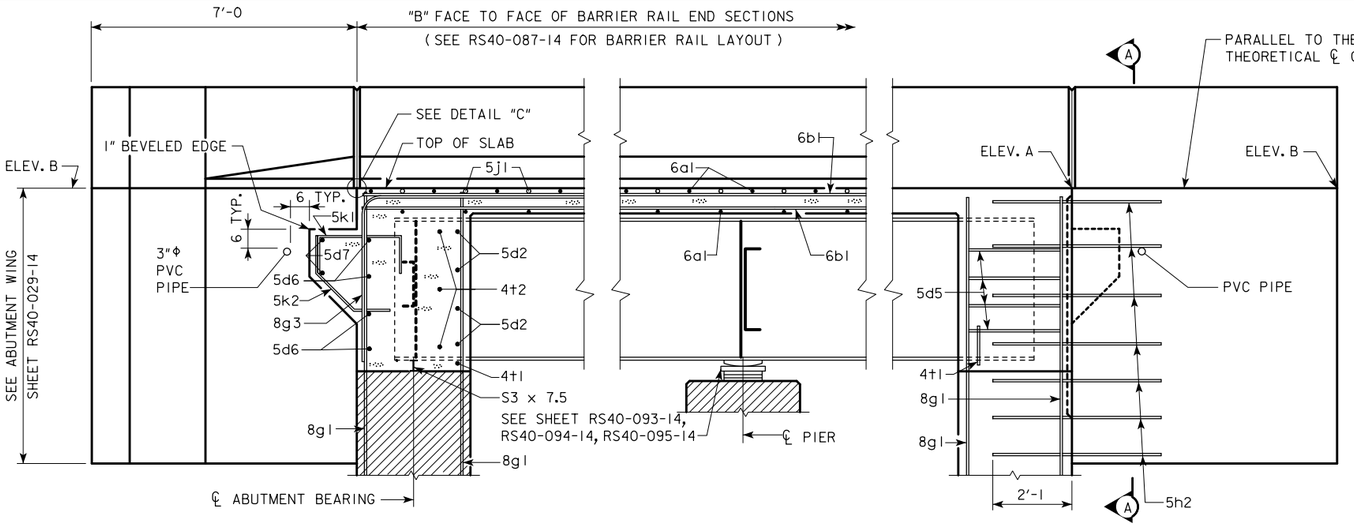

PART LONGITUDINAL SECTION NEAR GUTTER

PART END VIEW AT ABUTMENT

NOTE:
PLUG 3"Φ PVC PIPE WITH EXPANDING FOAM PRIOR TO BACKFILLING BEHIND ABUTMENTS.

NOTE:
FOR ELEVATION A, ELEVATION B AND DIMENSION C SEE "MISCELLANEOUS DETAILS" FOR THE APPROPRIATE LENGTH BRIDGE.

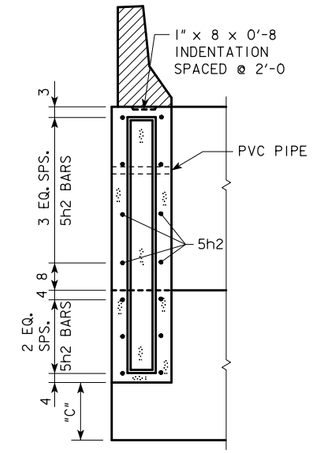

SECTION A-A

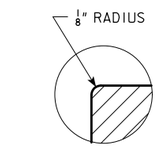

DETAIL "C"

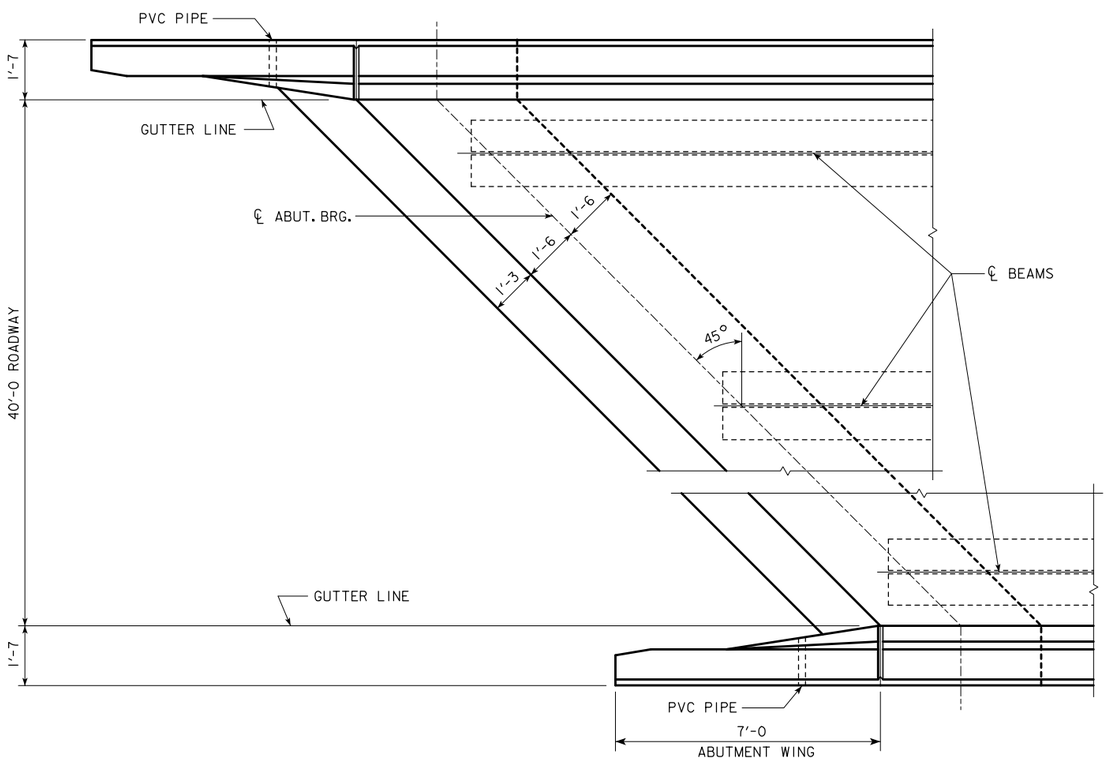

PART PLAN
(STEEL DIAPHRAGMS NOT SHOWN)

LATEST REVISION DATE

APPROVED BY BRIDGE ENGINEER

IOWA DOT Highway Division

STANDARD DESIGN - 40' ROADWAY, 3 SPAN BRIDGES

ROLLED STEEL BEAM BRIDGES

OCTOBER, 2014

LONGITUDINAL SECTION
45° SKEW

RS40-027-14

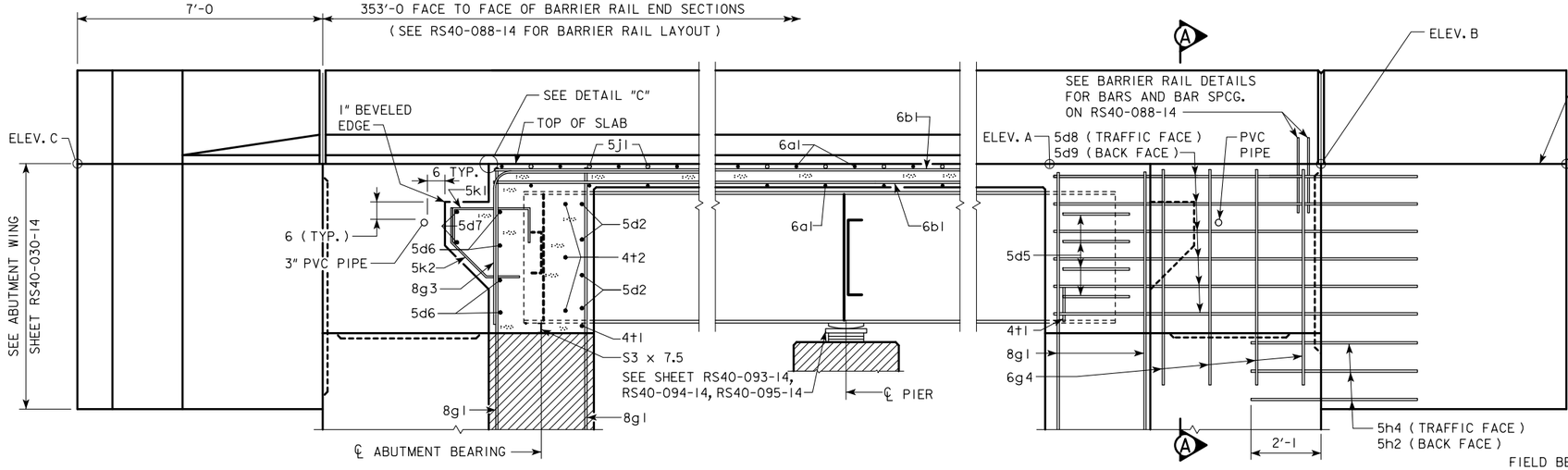

PART LONGITUDINAL SECTION NEAR GUTTER

NOTE:
PLUG 3"Φ PVC PIPE WITH EXPANDING FOAM PRIOR TO BACKFILLING BEHIND ABUTMENTS.

NOTE:
FOR ELEVATION A, ELEVATION B, ELEVATION C AND DIMENSION C SEE "MISCELLANEOUS DETAILS" FOR THE APPROPRIATE LENGTH BRIDGE.

PART END VIEW AT ABUTMENT

FIELD BEND 5h4 BAR AS NECESSARY TO AVOID PILE IN ABUTMENT WING.

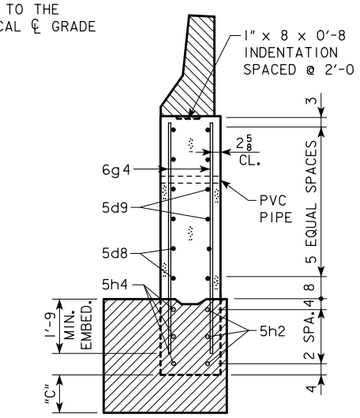

SECTION A-A

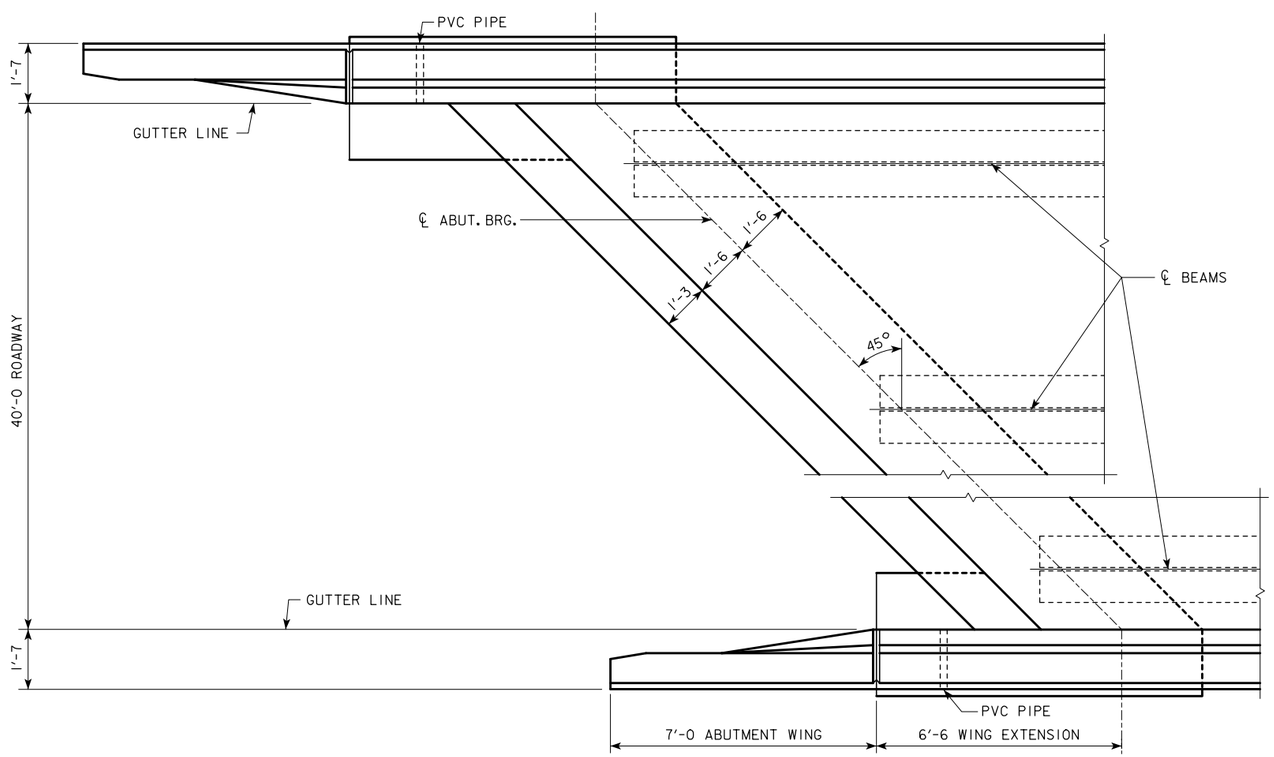

PART PLAN

(STEEL DIAPHRAGMS NOT SHOWN)

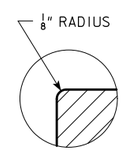

DETAIL "C"

LATEST REVISION DATE

APPROVED BY BRIDGE ENGINEER

IOWA DOT Highway Division

STANDARD DESIGN - 40' ROADWAY, 3 SPAN BRIDGES

ROLLED STEEL BEAM BRIDGES

OCTOBER, 2014

LONGITUDINAL SECTION 45° SKEW

RS40-028-14

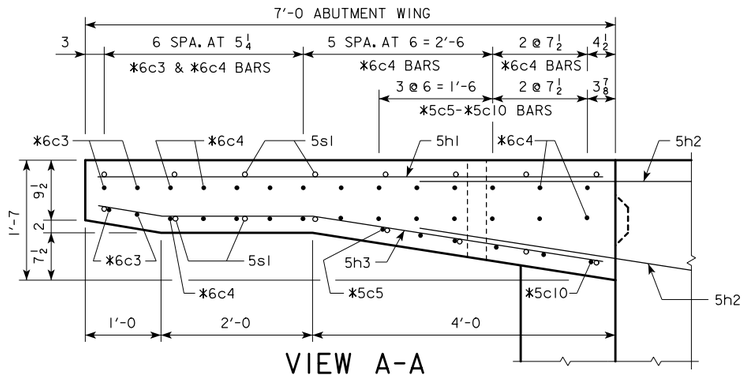

VIEW A-A

NOTE:
PLUG 3"Φ PVC PIPE WITH EXPANDING FOAM PRIOR TO BACKFILLING BEHIND ABUTMENTS.

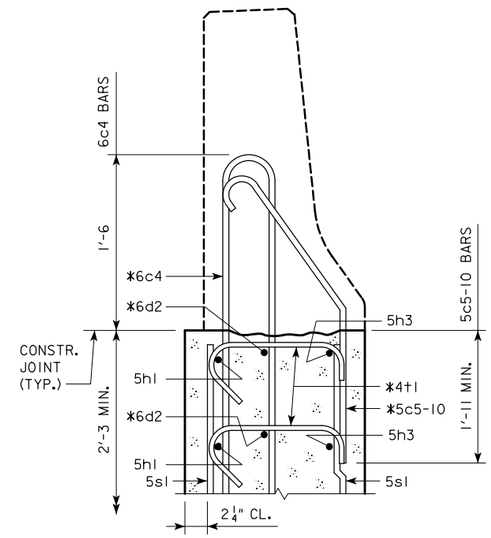

SECTION B-B

* BARRIER RAIL END SECTION BARS TO BE PLACED WITH ABUTMENT WING.

SEE END SECTION DETAILS ON SHEET RS40-089-14 FOR DETAILS OF BARRIER RAIL END SECTION. REINFORCING BARS 6c3, 6c4, 5c5-10, 6d2 & 4t1 ARE INCLUDED IN THE BARRIER RAIL QUANTITIES.

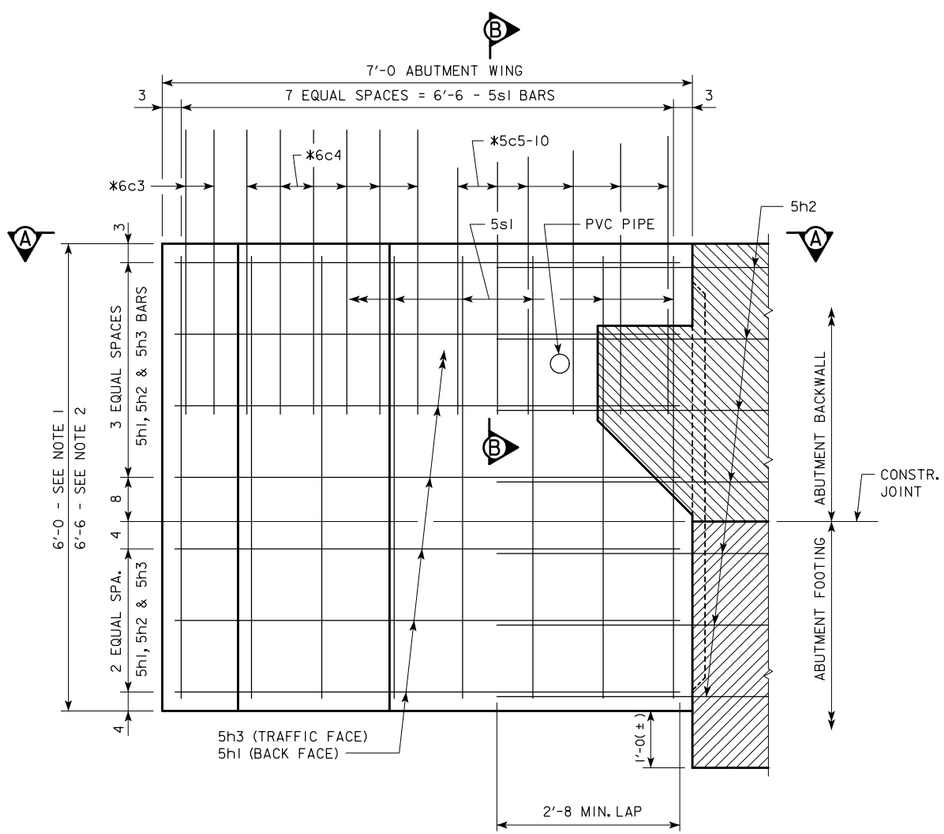

ABUTMENT WING - ELEVATION VIEW

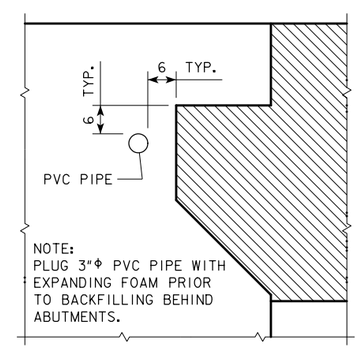

NOTE:
PLUG 3"Φ PVC PIPE WITH EXPANDING FOAM PRIOR TO BACKFILLING BEHIND ABUTMENTS.

PVC PIPE LOCATION

NOTE:

1. USE FOR BRIDGES 160'-0 THRU 200'-0.
2. USE FOR BRIDGES 220'-0 THRU 320'-0.
3. REINFORCING STEEL QUANTITY IS INCLUDED IN THE DECK AND ABUTMENT REINFORCEMENT QUANTITIES.
4. SEE CONCRETE PLACEMENT QUANTITIES TABLE FOR VALUES.

LATEST REVISION DATE

APPROVED BY BRIDGE ENGINEER

IOWADOT Highway Division

STANDARD DESIGN - 40' ROADWAY, 3 SPAN BRIDGES

ROLLED STEEL BEAM BRIDGES

OCTOBER, 2014

ABUTMENT WING DETAILS
BRIDGES 160'-0 - 320'-0

RS40-029-14

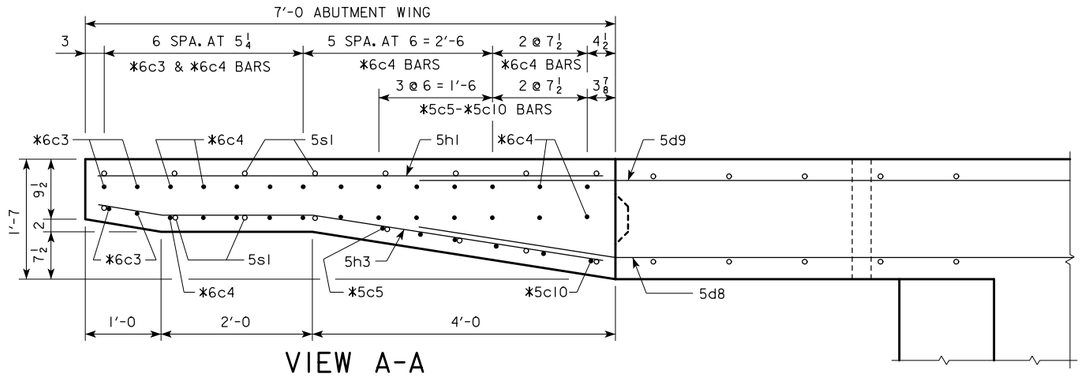

VIEW A-A

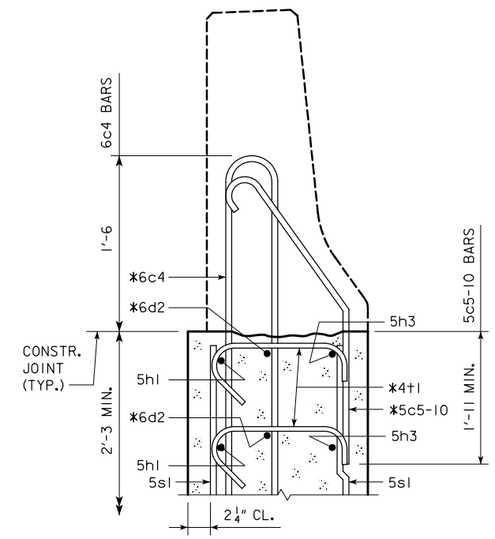

SECTION B-B

* BARRIER RAIL END SECTION BARS TO BE PLACED WITH ABUTMENT WING.

SEE END SECTION DETAILS ON SHEET RS40-089-14 FOR DETAILS OF BARRIER RAIL END SECTION. REINFORCING BARS 6c3, 6c4, 5c5-10, 6d2 & 4t1 ARE INCLUDED IN THE BARRIER RAIL QUANTITIES.

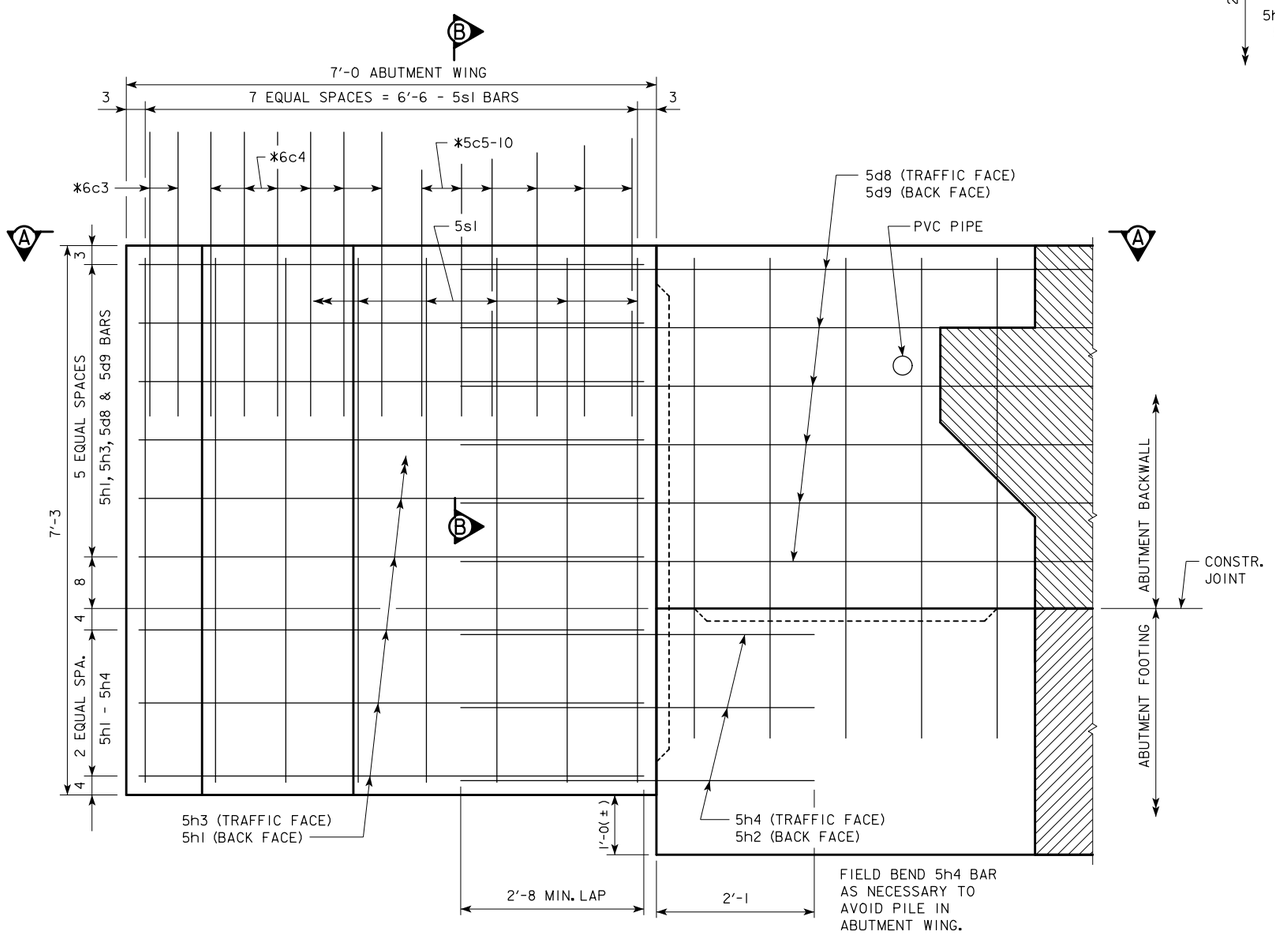

ABUTMENT WING - ELEVATION VIEW

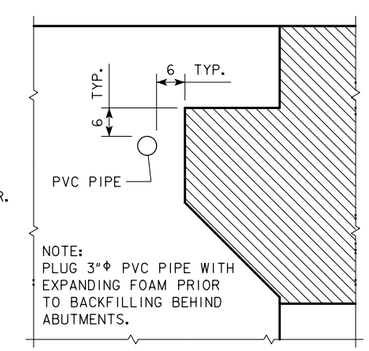

NOTE:
PLUG 3"Φ PVC PIPE WITH EXPANDING FOAM PRIOR TO BACKFILLING BEHIND ABUTMENTS.

PVC PIPE LOCATION

NOTE:

1. USE FOR 340'-0 BRIDGES.
2. REINFORCING STEEL QUANTITY IS INCLUDED IN THE DECK AND ABUTMENT REINFORCEMENT QUANTITIES.
3. SEE CONCRETE PLACEMENT QUANTITIES TABLE FOR VALUES.

LATEST REVISION DATE

APPROVED BY BRIDGE ENGINEER

IOWA DOT Highway Division

STANDARD DESIGN - 40' ROADWAY, 3 SPAN BRIDGES

ROLLED STEEL BEAM BRIDGES

OCTOBER, 2014

ABUTMENT WING DETAILS
BRIDGE 340'-0

RS40-030-14

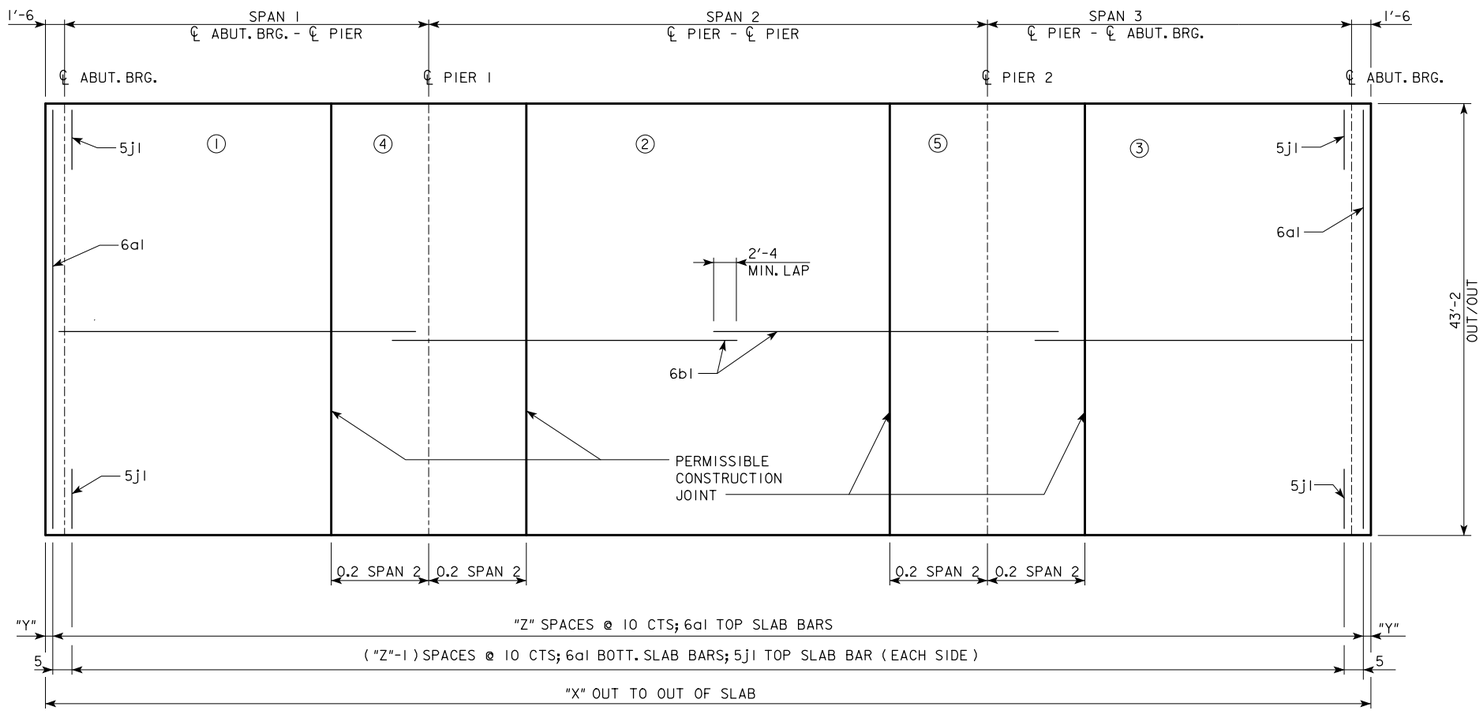

CONCRETE PLACEMENT DIAGRAM SHOWING SLAB REINFORCING

SPAN LENGTHS			
BRIDGE LENGTH	SPAN 1	SPAN 2	SPAN 3
160'-0	48'-0	64'-0	48'-0
180'-0	54'-0	72'-0	54'-0
200'-0	60'-0	80'-0	60'-0
220'-0	66'-0	88'-0	66'-0
240'-0	72'-0	96'-0	72'-0
260'-0	78'-0	104'-0	78'-0
280'-0	84'-0	112'-0	84'-0
300'-0	90'-0	120'-0	90'-0
320'-0	96'-0	128'-0	96'-0
340'-0	102'-0	136'-0	102'-0

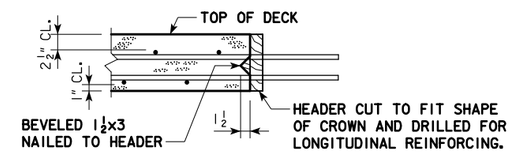

TRANSVERSE SLAB CONSTRUCTION JOINT

NOTES:

1. CONCRETE DECK SHALL BE PLACED IN SECTIONS AND SEQUENCES INDICATED. ALTERNATE PROCEDURES FOR PLACING DECK CONCRETE MAY BE SUBMITTED FOR APPROVAL TOGETHER WITH A STATEMENT OF THE PROPOSED METHOD AND EVIDENCE THAT THE CONTRACTOR POSSESSES THE NECESSARY EQUIPMENT AND FACILITIES TO ACCOMPLISH THE REQUIRED RESULTS. FOR APPROVED ALTERNATE PROCEDURES THE ENGINEER SHALL DETERMINE IF A RETARDING ADMIXTURE IS REQUIRED TO MAINTAIN PLASTICITY OF THE CONCRETE DECK DURING PLACEMENT.

REINFORCEMENT DIMENSIONS ℄-℄ ABUTMENT BEARINGS	160'-0	180'-0	200'-0	220'-0	240'-0	260'-0	280'-0	300'-0	320'-0	340'-0
X (F.T-IN.)	163'-0	183'-0	203'-0	223'-0	243'-0	263'-0	283'-0	303'-0	323'-0	343'-0
Y (IN.)	3	3	3	3	3	3	3	3	3	3
Z (SPACES)	195	219	243	267	291	315	339	363	387	411

Δ NOTE:
CONCRETE QUANTITIES SHALL BE LISTED ON THE SUMMARY QUANTITIES SHEET.

Δ CONCRETE PLACEMENT QTYS. (SUPERSTRUCTURE PLUS INTEGRAL ABUTMENTS)		160'-0	180'-0	200'-0	220'-0	240'-0	260'-0	280'-0	300'-0	320'-0	340'-0
SLAB, AND ABUT DIAPHRAGM, SECTION 1 & 3	CY	113.8	123.8	136.0	147.9	157.8	169.7	179.6	189.6	199.7	212.4
SLAB, SECTION 2	CY	42.1	47.4	52.7	58.0	63.2	68.7	74.0	79.2	84.5	89.8
SLAB, SECTION 4 & 5	CY	56.1	63.2	70.2	77.3	84.3	91.6	98.6	105.7	112.7	119.8
ABUTMENT WINGS	CY	7.2	7.2	7.2	7.6	7.6	7.6	7.6	7.6	7.6	13.9
TWO ABUTMENT FOOTINGS	CY	35.0	35.0	35.0	35.0	35.0	35.0	35.0	35.0	35.0	42.8
TOTAL	CY	254.2	276.6	301.1	325.8	347.9	372.6	394.8	417.1	439.5	478.7

ESTIMATED QTYS. (SUPERSTRUCTURE PLUS INTEGRAL ABUTMENTS)		160'-0	180'-0	200'-0	220'-0	240'-0	260'-0	280'-0	300'-0	320'-0	340'-0
NO. OF STEEL H-PILES FOR TWO ABUTMENTS (HP 10 X 57)	NO.	16	16	16	18	18	18	20	20	20	24
BARRIER RAILS	LF	354.0	394.0	434.0	474.0	514.0	554.0	594.0	634.0	674.0	734.0
WING ARMORING - MACADAM STONE	SY	3.5	3.5	3.5	3.5	3.5	3.5	3.5	3.5	3.5	5.7
PREBORED HOLES	LF	160	160	160	180	180	180	200	200	200	240

NOTE:
FOR QUANTITIES OF STRUCTURAL CONCRETE, REINFORCING STEEL AND STRUCTURAL STEEL REFER TO THE SUMMARY QUANTITIES SHEET IN THE BRIDGE PLANS.

07-15
LATEST REVISION DATE

APPROVED BY BRIDGE ENGINEER

IOWADOT Highway Division

STANDARD DESIGN - 40' ROADWAY, 3 SPAN BRIDGES

ROLLED STEEL BEAM BRIDGES

OCTOBER, 2014

SUPERSTRUCTURE QUANTITIES 0° SKEW

RS40-031-14

REVISED 07-2015 - CHANGED NOTE 1, CONCRETE PLACEMENT NOTE TO ACCOUNT FOR THE POSSIBLE ADDITION OF A RETARDING ADMIXTURE TO THE CONCRETE.

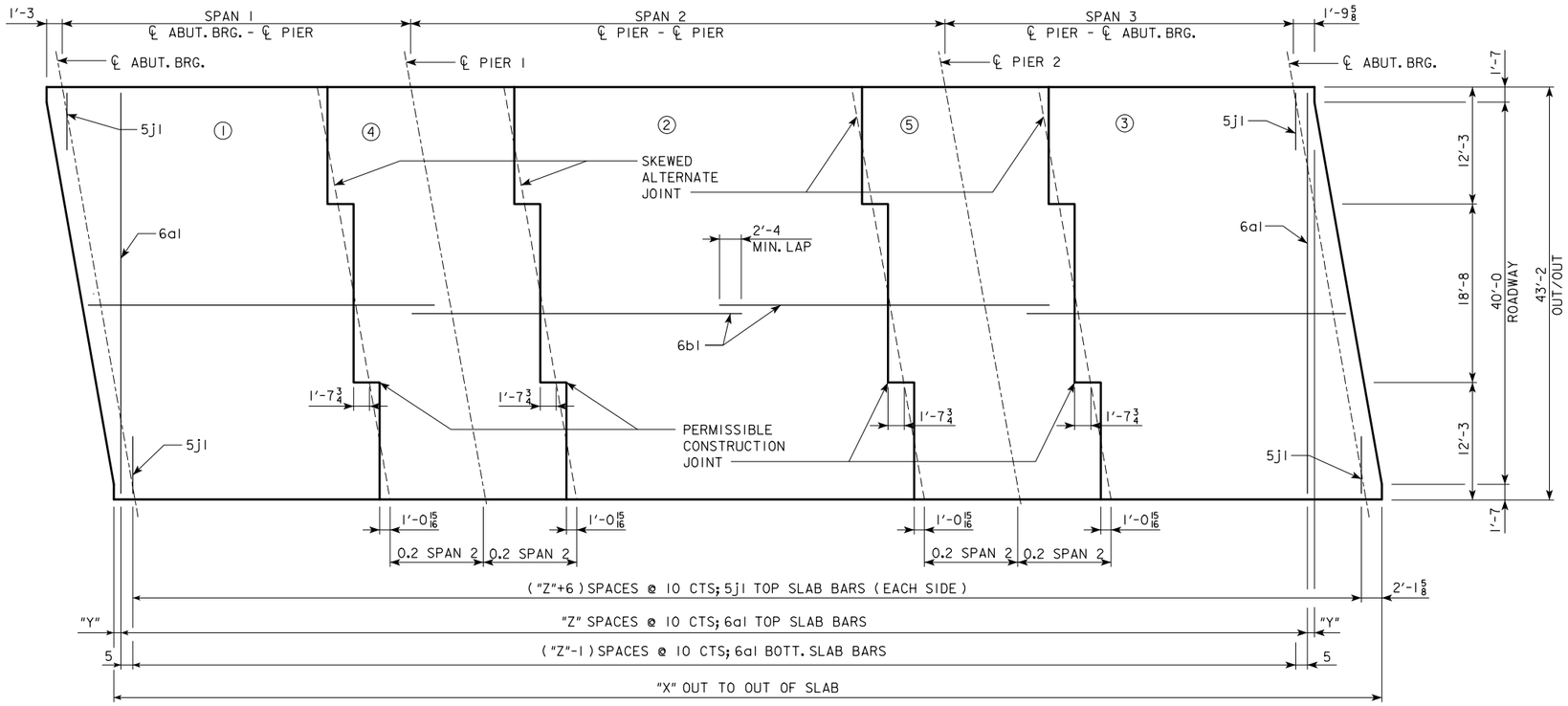

CONCRETE PLACEMENT DIAGRAM SHOWING SLAB REINFORCING (RIGHT AHEAD SKEW SHOWN, LEFT AHEAD SKEW SIMILAR)

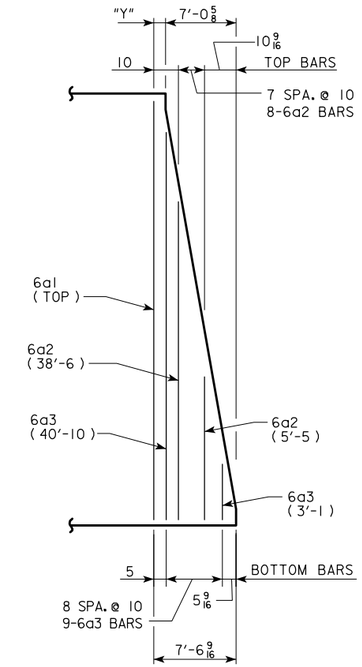

END OF SLAB REINFORCING

(TYPICAL EACH END OF DECK)

REINFORCEMENT DIMENSIONS ℄-℄ ABUTMENT BEARINGS	160'-0	180'-0	200'-0	220'-0	240'-0	260'-0	280'-0	300'-0	320'-0	340'-0
X (FT.-IN.)	163'-0 5/8	183'-0 5/8	203'-0 5/8	223'-0 5/8	243'-0 5/8	263'-0 5/8	283'-0 5/8	303'-0 5/8	323'-0 5/8	343'-0 5/8
Y (IN.)	5 15/16	5 15/16	5 15/16	5 15/16	5 15/16	5 15/16	5 15/16	5 15/16	5 15/16	5 15/16
Z (SPACES)	186	210	234	258	282	306	330	354	378	402

Δ NOTE:
CONCRETE QUANTITIES SHALL BE LISTED ON THE SUMMARY QUANTITIES SHEET.

Δ CONCRETE PLACEMENT QTYS. (SUPERSTRUCTURE PLUS INTEGRAL ABUTMENTS)		160'-0	180'-0	200'-0	220'-0	240'-0	260'-0	280'-0	300'-0	320'-0	340'-0
SLAB, AND ABUT DIAPHRAGM, SECTION 1 & 3	CY	114.4	124.4	136.7	148.5	158.5	170.3	180.3	190.3	200.4	213.1
SLAB, SECTION 2	CY	42.1	47.4	52.7	58.0	63.2	68.7	74.0	79.2	84.5	89.8
SLAB, SECTION 4 & 5	CY	56.1	63.2	70.2	77.3	84.3	91.6	98.6	105.7	112.7	119.8
ABUTMENT WINGS	CY	7.2	7.2	7.2	7.6	7.6	7.6	7.6	7.6	7.6	13.9
TWO ABUTMENT FOOTINGS	CY	35.5	35.5	35.5	35.5	35.5	35.5	35.5	35.5	35.5	43.3
TOTAL	CY	255.3	277.7	302.3	326.9	349.1	373.7	396.0	418.3	440.7	479.9

ESTIMATED QTYS. (SUPERSTRUCTURE PLUS INTEGRAL ABUTMENTS)		160'-0	180'-0	200'-0	220'-0	240'-0	260'-0	280'-0	300'-0	320'-0	340'-0
NO. OF STEEL H-PILES FOR TWO ABUTMENTS (HP 10 X 57) AND DESIGN BEARING REQUIRED PER PILE	NO.	16	16	16	18	18	18	20	20	20	24
BARRIER RAILS	LF	354.1	394.1	434.1	474.1	514.1	554.1	594.1	634.1	674.1	734.0
WING ARMORING - MACADAM STONE	SY	3.5	3.5	3.5	3.5	3.5	3.5	3.5	3.5	3.5	5.7
PREBORED HOLES	LF	160	160	160	180	180	180	200	200	200	240

NOTE:
FOR QUANTITIES OF STRUCTURAL CONCRETE, REINFORCING STEEL AND STRUCTURAL STEEL REFER TO THE SUMMARY QUANTITIES SHEET IN THE BRIDGE PLANS.

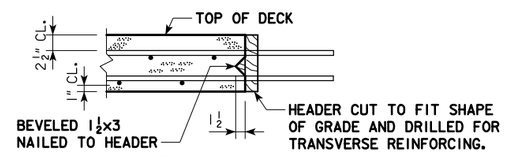

LONGITUDINAL SLAB CONSTRUCTION JOINT

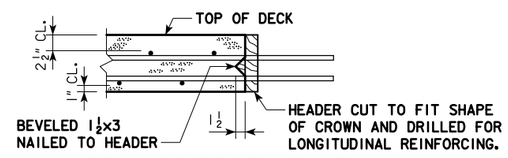

TRANSVERSE SLAB CONSTRUCTION JOINT

SPAN LENGTHS			
BRIDGE LENGTH	SPAN 1	SPAN 2	SPAN 3
160'-0	48'-0	64'-0	48'-0
180'-0	54'-0	72'-0	54'-0
200'-0	60'-0	80'-0	60'-0
220'-0	66'-0	88'-0	66'-0
240'-0	72'-0	96'-0	72'-0
260'-0	78'-0	104'-0	78'-0
280'-0	84'-0	112'-0	84'-0
300'-0	90'-0	120'-0	90'-0
320'-0	96'-0	128'-0	96'-0
340'-0	102'-0	136'-0	102'-0

NOTES:

1. CONCRETE DECK SHALL BE PLACED IN SECTIONS AND SEQUENCES INDICATED. ALTERNATE PROCEDURES FOR PLACING DECK CONCRETE MAY BE SUBMITTED FOR APPROVAL TOGETHER WITH A STATEMENT OF THE PROPOSED METHOD AND EVIDENCE THAT THE CONTRACTOR POSSESSES THE NECESSARY EQUIPMENT AND FACILITIES TO ACCOMPLISH THE REQUIRED RESULTS. FOR APPROVED ALTERNATE PROCEDURES THE ENGINEER SHALL DETERMINE IF A RETARDING ADMIXTURE IS REQUIRED TO MAINTAIN PLASTICITY OF THE CONCRETE DECK DURING PLACEMENT.

07-15
LATEST REVISION DATE

APPROVED BY BRIDGE ENGINEER

IOWA DOT Highway Division

STANDARD DESIGN - 40' ROADWAY, 3 SPAN BRIDGES

ROLLED STEEL BEAM BRIDGES

OCTOBER, 2014

SUPERSTRUCTURE QUANTITIES 10° SKEW

RS40-032-14

REVISED 07-2015 - CHANGED NOTE 1, CONCRETE PLACEMENT NOTE TO ACCOUNT FOR THE POSSIBLE ADDITION OF A RETARDING ADMIXTURE TO THE CONCRETE.

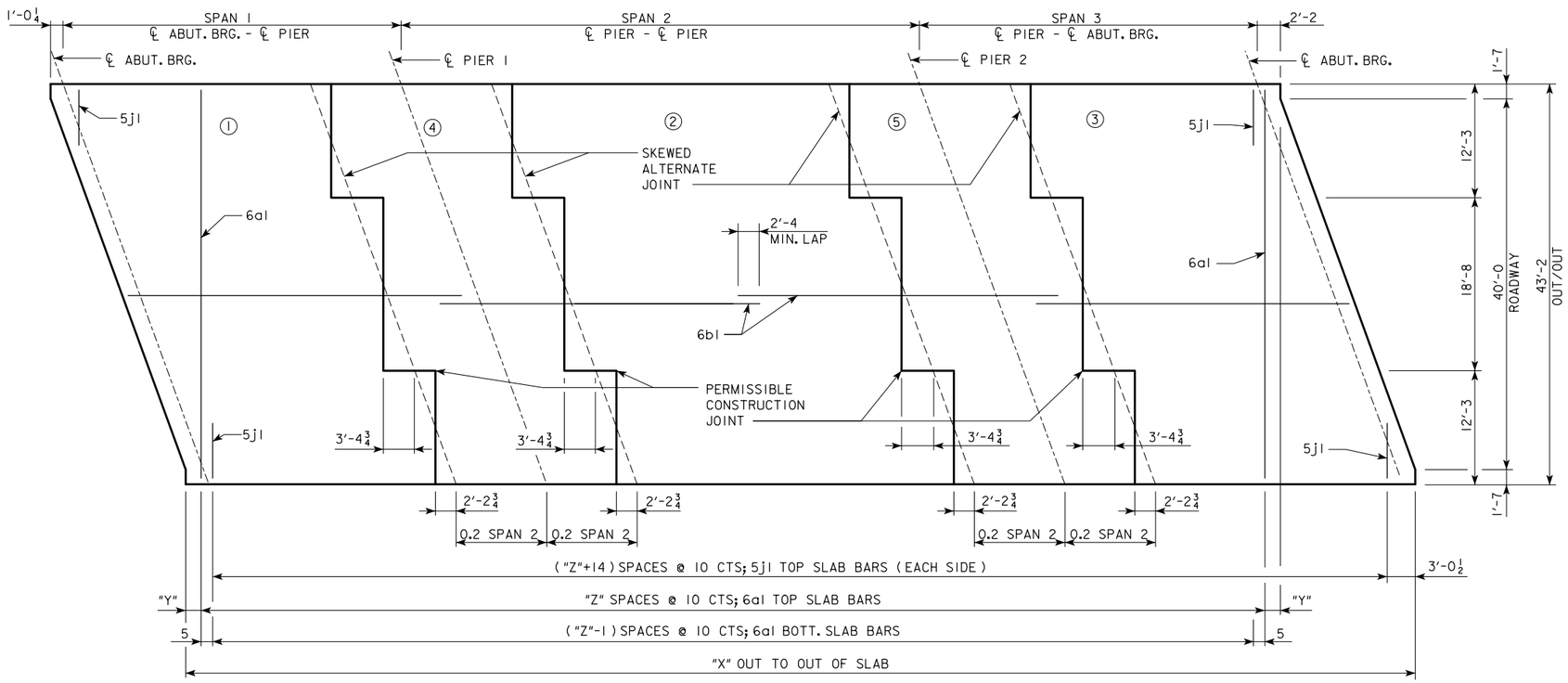

CONCRETE PLACEMENT DIAGRAM SHOWING SLAB REINFORCING (RIGHT AHEAD SKEW SHOWN, LEFT AHEAD SKEW SIMILAR)

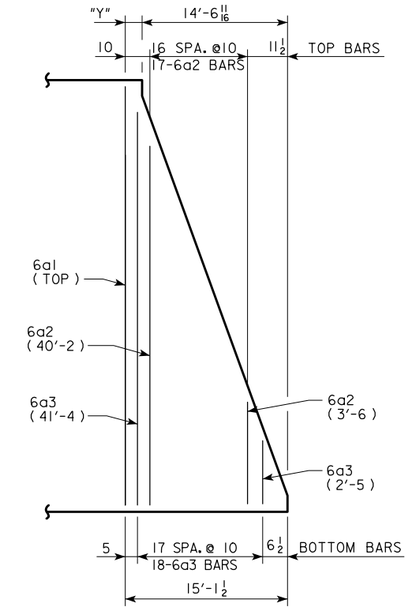

END OF SLAB REINFORCING
(TYPICAL EACH END OF DECK)

REINFORCEMENT DIMENSIONS ℄-℄ ABUTMENT BEARINGS	160'-0	180'-0	200'-0	220'-0	240'-0	260'-0	280'-0	300'-0	320'-0	340'-0
X (FT.-IN.)	163'-2 1/4	183'-2 1/4	203'-2 1/4	223'-2 1/4	243'-2 1/4	263'-2 1/4	283'-2 1/4	303'-2 1/4	323'-2 1/4	343'-2 1/4
Y (IN.)	6 13/16	6 13/16	6 13/16	6 13/16	6 13/16	6 13/16	6 13/16	6 13/16	6 13/16	6 13/16
Z (SPACES)	177	201	225	249	273	297	321	345	369	393

Δ NOTE:
CONCRETE QUANTITIES SHALL BE LISTED ON THE SUMMARY QUANTITIES SHEET.

Δ CONCRETE PLACEMENT QTYS. (SUPERSTRUCTURE PLUS INTEGRAL ABUTMENTS)		160'-0	180'-0	200'-0	220'-0	240'-0	260'-0	280'-0	300'-0	320'-0	340'-0
SLAB, AND ABUT DIAPHRAGM, SECTION 1 & 3	CY	116.2	126.2	138.6	150.6	160.6	172.5	182.5	192.5	202.6	215.4
SLAB, SECTION 2	CY	42.1	47.4	52.7	58.0	63.2	68.7	74.0	79.2	84.5	89.8
SLAB, SECTION 4 & 5	CY	56.1	63.2	70.2	77.3	84.3	91.6	98.6	105.7	112.7	119.8
ABUTMENT WINGS	CY	7.2	7.2	7.2	7.6	7.6	7.6	7.6	7.6	7.6	13.9
TWO ABUTMENT FOOTINGS	CY	37.2	37.2	37.2	37.2	37.2	37.2	37.2	37.2	37.2	45.0
TOTAL	CY	258.8	281.2	305.9	330.7	352.9	377.6	399.9	422.2	444.6	483.9

ESTIMATED QTYS. (SUPERSTRUCTURE PLUS INTEGRAL ABUTMENTS)		160'-0	180'-0	200'-0	220'-0	240'-0	260'-0	280'-0	300'-0	320'-0	340'-0
NO. OF STEEL H-PILES FOR TWO ABUTMENTS (HP 10 X 57)	NO.	16	16	16	18	18	18	20	20	20	24
BARRIER RAILS	LF	354.4	394.4	434.4	474.4	514.4	554.4	594.4	634.4	674.4	734.0
WING ARMORING - MACADAM STONE	SY	3.5	3.5	3.5	3.5	3.5	3.5	3.5	3.5	3.5	5.7
PREBORED HOLES	LF	160	160	160	180	180	180	200	200	200	240

NOTE:
FOR QUANTITIES OF STRUCTURAL CONCRETE, REINFORCING STEEL AND STRUCTURAL STEEL REFER TO THE SUMMARY QUANTITIES SHEET IN THE BRIDGE PLANS.

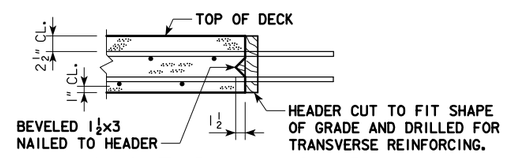

LONGITUDINAL SLAB CONSTRUCTION JOINT

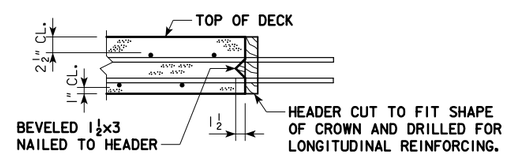

TRANSVERSE SLAB CONSTRUCTION JOINT

SPAN LENGTHS			
BRIDGE LENGTH	SPAN 1	SPAN 2	SPAN 3
160'-0	48'-0	64'-0	48'-0
180'-0	54'-0	72'-0	54'-0
200'-0	60'-0	80'-0	60'-0
220'-0	66'-0	88'-0	66'-0
240'-0	72'-0	96'-0	72'-0
260'-0	78'-0	104'-0	78'-0
280'-0	84'-0	112'-0	84'-0
300'-0	90'-0	120'-0	90'-0
320'-0	96'-0	128'-0	96'-0
340'-0	102'-0	136'-0	102'-0

NOTES:

1. CONCRETE DECK SHALL BE PLACED IN SECTIONS AND SEQUENCES INDICATED. ALTERNATE PROCEDURES FOR PLACING DECK CONCRETE MAY BE SUBMITTED FOR APPROVAL TOGETHER WITH A STATEMENT OF THE PROPOSED METHOD AND EVIDENCE THAT THE CONTRACTOR POSSESSES THE NECESSARY EQUIPMENT AND FACILITIES TO ACCOMPLISH THE REQUIRED RESULTS. FOR APPROVED ALTERNATE PROCEDURES THE ENGINEER SHALL DETERMINE IF A RETARDING ADMIXTURE IS REQUIRED TO MAINTAIN PLASTICITY OF THE CONCRETE DECK DURING PLACEMENT.

07-15
LATEST REVISION DATE

APPROVED BY BRIDGE ENGINEER

IOWA DOT Highway Division

STANDARD DESIGN - 40' ROADWAY, 3 SPAN BRIDGES

ROLLED STEEL BEAM BRIDGES

OCTOBER, 2014

SUPERSTRUCTURE QUANTITIES 20° SKEW

RS40-033-14

REVISED 07-2015 - CHANGED NOTE 1, CONCRETE PLACEMENT NOTE TO ACCOUNT FOR THE POSSIBLE ADDITION OF A RETARDING ADMIXTURE TO THE CONCRETE.

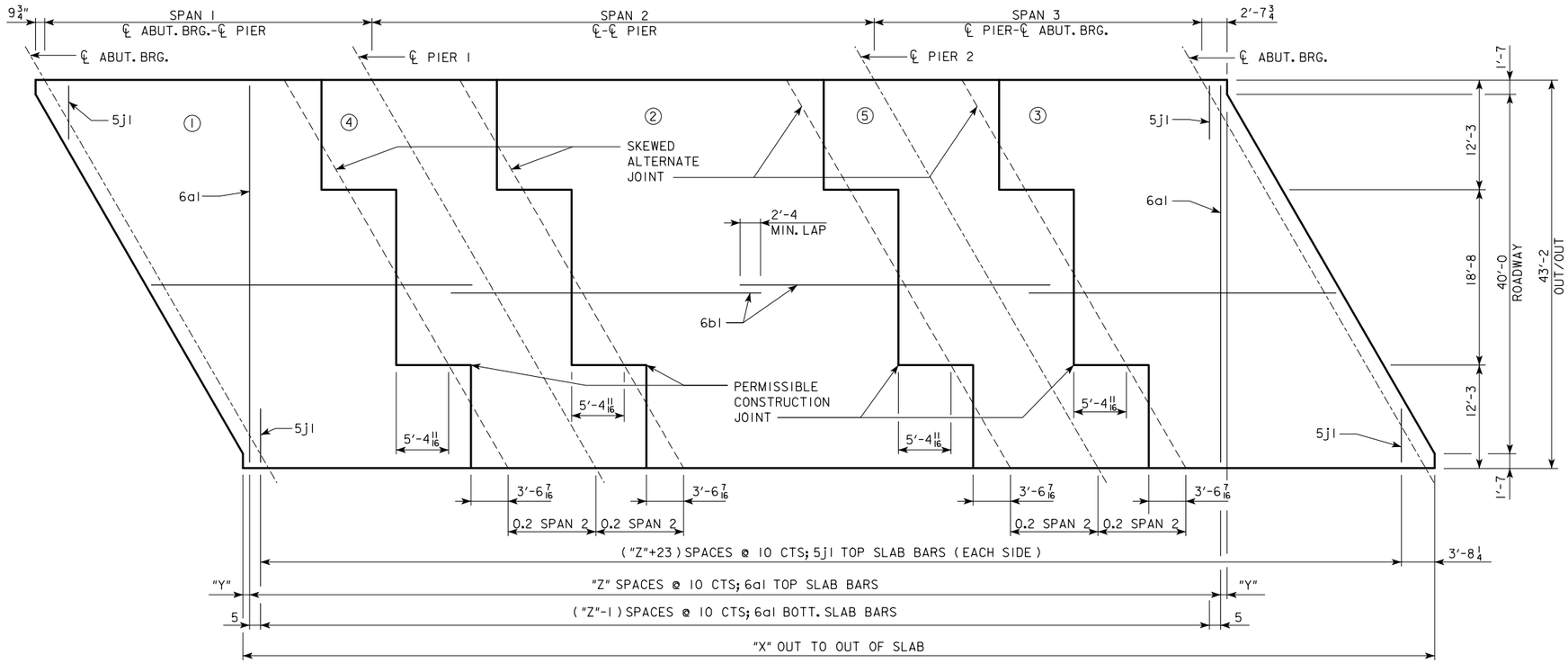

CONCRETE PLACEMENT DIAGRAM SHOWING SLAB REINFORCING (RIGHT AHEAD SKEW SHOWN, LEFT AHEAD SKEW SIMILAR)

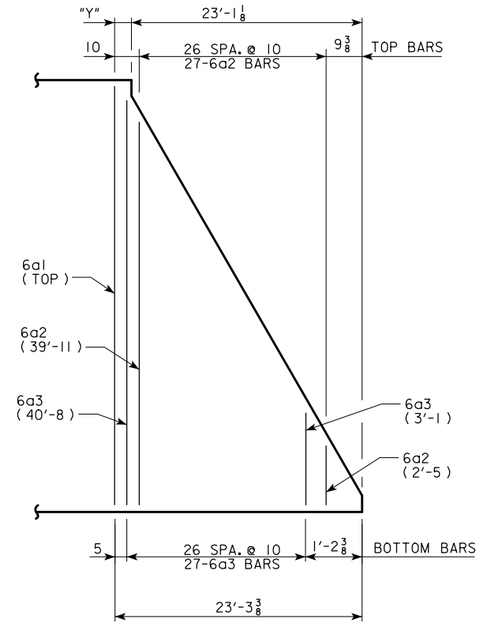

END OF SLAB REINFORCING
(TYPICAL EACH END OF DECK)

REINFORCEMENT DIMENSIONS ℄-℄ ABUTMENT BEARINGS	160'-0	180'-0	200'-0	220'-0	240'-0	260'-0	280'-0	300'-0	320'-0	340'-0
X (FT.-IN.)	163'-5 1/2	183'-5 1/2	203'-5 1/2	223'-5 1/2	243'-5 1/2	263'-5 1/2	283'-5 1/2	303'-5 1/2	323'-5 1/2	343'-5 1/2
Y (IN.)	2 1/4	2 1/4	2 1/4	2 1/4	2 1/4	2 1/4	2 1/4	2 1/4	2 1/4	2 1/4
Z (SPACES)	168	192	216	240	264	288	312	336	360	384

Δ NOTE:
CONCRETE QUANTITIES SHALL BE LISTED ON THE SUMMARY QUANTITIES SHEET.

Δ CONCRETE PLACEMENT QTYS. (SUPERSTRUCTURE PLUS INTEGRAL ABUTMENTS)		160'-0	180'-0	200'-0	220'-0	240'-0	260'-0	280'-0	300'-0	320'-0	340'-0
SLAB, AND ABUT DIAPHRAGM, SECTION 1 & 3	CY	119.4	129.5	142.2	154.3	164.3	176.5	186.4	196.5	206.6	219.8
SLAB, SECTION 2	CY	42.1	47.4	52.7	58.0	63.2	68.7	74.0	79.2	84.5	89.8
SLAB, SECTION 4 & 5	CY	56.1	63.2	70.2	77.3	84.3	91.6	98.6	105.7	112.7	119.8
ABUTMENT WINGS	CY	7.2	7.2	7.2	7.6	7.6	7.6	7.6	7.6	7.6	13.9
TWO ABUTMENT FOOTINGS	CY	40.4	40.4	40.4	40.4	40.4	40.4	40.4	40.4	40.4	48.2
TOTAL	CY	265.2	287.7	312.7	337.6	359.8	384.8	407.0	429.4	451.8	491.5

ESTIMATED QTYS. (SUPERSTRUCTURE PLUS INTEGRAL ABUTMENTS)		160'-0	180'-0	200'-0	220'-0	240'-0	260'-0	280'-0	300'-0	320'-0	340'-0
NO. OF STEEL H-PILES FOR TWO ABUTMENTS (HP 10 X 57)	NO.	16	16	18	18	18	20	20	20	20	26
BARRIER RAILS	LF	354.9	394.9	434.9	474.9	514.9	554.9	594.9	634.9	674.9	734.0
WING ARMORING - MACADAM STONE	SY	3.6	3.6	3.6	3.6	3.6	3.6	3.6	3.6	3.6	5.7
PREBORED HOLES	LF	160	160	180	180	180	200	200	200	200	260

NOTE:
FOR QUANTITIES OF STRUCTURAL CONCRETE, REINFORCING STEEL AND STRUCTURAL STEEL REFER TO THE SUMMARY QUANTITIES SHEET IN THE BRIDGE PLANS.

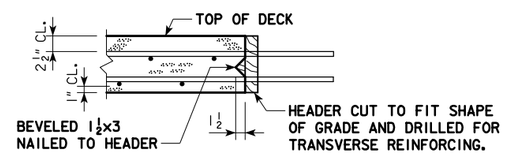

LONGITUDINAL SLAB CONSTRUCTION JOINT

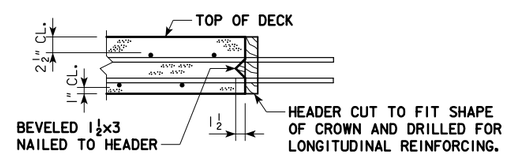

TRANSVERSE SLAB CONSTRUCTION JOINT

NOTES:

1. CONCRETE DECK SHALL BE PLACED IN SECTIONS AND SEQUENCES INDICATED. ALTERNATE PROCEDURES FOR PLACING DECK CONCRETE MAY BE SUBMITTED FOR APPROVAL TOGETHER WITH A STATEMENT OF THE PROPOSED METHOD AND EVIDENCE THAT THE CONTRACTOR POSSESSES THE NECESSARY EQUIPMENT AND FACILITIES TO ACCOMPLISH THE REQUIRED RESULTS. FOR APPROVED ALTERNATE PROCEDURES THE ENGINEER SHALL DETERMINE IF A RETARDING ADMIXTURE IS REQUIRED TO MAINTAIN PLASTICITY OF THE CONCRETE DECK DURING PLACEMENT.

SPAN LENGTHS			
BRIDGE LENGTH	SPAN 1	SPAN 2	SPAN 3
160'-0	48'-0	64'-0	48'-0
180'-0	54'-0	72'-0	54'-0
200'-0	60'-0	80'-0	60'-0
220'-0	66'-0	88'-0	66'-0
240'-0	72'-0	96'-0	72'-0
260'-0	78'-0	104'-0	78'-0
280'-0	84'-0	112'-0	84'-0
300'-0	90'-0	120'-0	90'-0
320'-0	96'-0	128'-0	96'-0
340'-0	102'-0	136'-0	102'-0

07-15
LATEST REVISION DATE

APPROVED BY BRIDGE ENGINEER

IOWA DOT Highway Division

STANDARD DESIGN - 40' ROADWAY, 3 SPAN BRIDGES

ROLLED STEEL BEAM BRIDGES

OCTOBER, 2014

SUPERSTRUCTURE QUANTITIES 30° SKEW

RS40-034-14

REVISED 07-2015 - CHANGED NOTE 1, CONCRETE PLACEMENT NOTE TO ACCOUNT FOR THE POSSIBLE ADDITION OF A RETARDING ADMIXTURE TO THE CONCRETE.

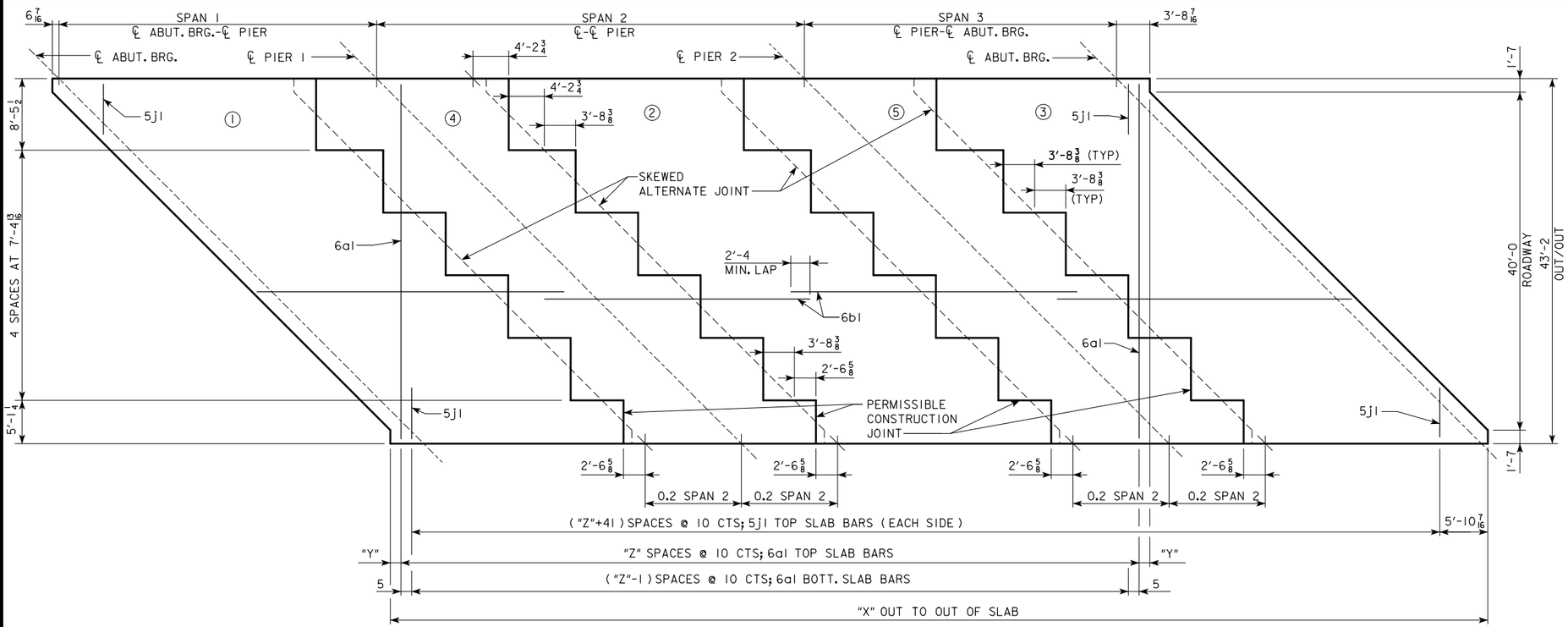

CONCRETE PLACEMENT DIAGRAM SHOWING SLAB REINFORCING (RIGHT AHEAD SKEW SHOWN, LEFT AHEAD SKEW SIMILAR)

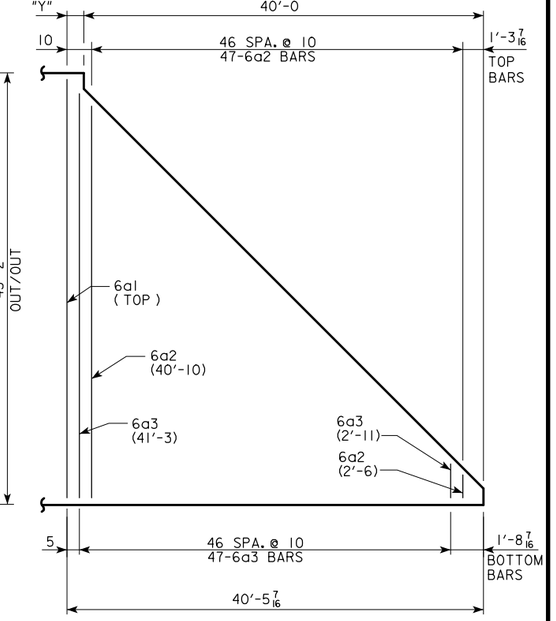

END OF SLAB REINFORCING
(TYPICAL EACH END OF DECK)

REINFORCEMENT DIMENSIONS ℄-℄ ABUTMENT BEARINGS	160'-0	180'-0	200'-0	220'-0	240'-0	260'-0	280'-0	300'-0	320'-0	340'-0
X (FT.-IN.)	164'-2 7/8	184'-2 7/8	204'-2 7/8	224'-2 7/8	244'-2 7/8	264'-2 7/8	284'-2 7/8	304'-2 7/8	324'-2 7/8	344'-2 7/8
Y (IN.)	5 7/16	5 7/16	5 7/16	5 7/16	5 7/16	5 7/16	5 7/16	5 7/16	5 7/16	5 7/16
Z (SPACES)	148	172	196	220	244	268	292	316	340	364

Δ NOTE:
CONCRETE QUANTITIES SHALL BE LISTED ON THE SUMMARY QUANTITIES SHEET.

Δ CONCRETE PLACEMENT QTYS. (SUPERSTRUCTURE PLUS INTEGRAL ABUTMENTS)		160'-0	180'-0	200'-0	220'-0	240'-0	260'-0	280'-0	300'-0	320'-0	340'-0
SLAB, AND ABUT DIAPHRAGM, SECTION 1 & 3	CY	129.1	139.4	152.6	165.4	175.4	188.0	198.1	208.2	218.4	232.4
SLAB, SECTION 2	CY	42.1	47.4	52.7	58.0	63.2	68.7	74.0	79.2	84.5	89.8
SLAB, SECTION 4 & 5	CY	56.1	63.2	70.2	77.3	84.3	91.6	98.6	105.7	112.7	119.8
ABUTMENT WINGS	CY	7.2	7.2	7.2	7.6	7.6	7.6	7.6	7.6	7.6	13.9
TWO ABUTMENT FOOTINGS	CY	49.5	49.5	49.5	49.5	49.5	49.5	49.5	49.5	49.5	57.2
TOTAL	CY	284.0	306.7	332.2	357.8	380.0	405.4	427.8	450.2	472.7	513.1

ESTIMATED QTYS. (SUPERSTRUCTURE PLUS INTEGRAL ABUTMENTS)		160'-0	180'-0	200'-0	220'-0	240'-0	260'-0	280'-0	300'-0	320'-0	340'-0
NO. OF STEEL H-PILES FOR TWO ABUTMENTS (HP 10 x 57)	NO.	18	18	18	18	20	20	20	20	22	26
BARRIER RAILS	LF	356.5	396.5	436.5	476.5	516.5	556.5	596.5	636.5	676.5	734.0
WING ARMORING - MACADAM STONE	SY	3.7	3.7	3.7	3.7	3.7	3.7	3.7	3.7	3.7	5.9
PREBORED HOLES	LF	180	180	180	180	200	200	200	200	220	260

NOTE:
FOR QUANTITIES OF STRUCTURAL CONCRETE, REINFORCING STEEL AND STRUCTURAL STEEL REFER TO THE SUMMARY QUANTITIES SHEET IN THE BRIDGE PLANS.

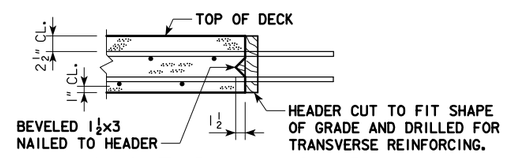

LONGITUDINAL SLAB CONSTRUCTION JOINT

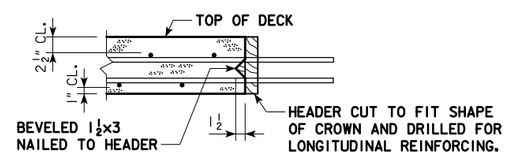

TRANSVERSE SLAB CONSTRUCTION JOINT

SPAN LENGTHS			
BRIDGE LENGTH	SPAN 1	SPAN 2	SPAN 3
160'-0	48'-0	64'-0	48'-0
180'-0	54'-0	72'-0	54'-0
200'-0	60'-0	80'-0	60'-0
220'-0	66'-0	88'-0	66'-0
240'-0	72'-0	96'-0	72'-0
260'-0	78'-0	104'-0	78'-0
280'-0	84'-0	112'-0	84'-0
300'-0	90'-0	120'-0	90'-0
320'-0	96'-0	128'-0	96'-0
340'-0	102'-0	136'-0	102'-0

NOTES:

1. CONCRETE DECK SHALL BE PLACED IN SECTIONS AND SEQUENCES INDICATED. ALTERNATE PROCEDURES FOR PLACING DECK CONCRETE MAY BE SUBMITTED FOR APPROVAL TOGETHER WITH A STATEMENT OF THE PROPOSED METHOD AND EVIDENCE THAT THE CONTRACTOR POSSESSES THE NECESSARY EQUIPMENT AND FACILITIES TO ACCOMPLISH THE REQUIRED RESULTS. FOR APPROVED ALTERNATE PROCEDURES THE ENGINEER SHALL DETERMINE IF A RETARDING ADMIXTURE IS REQUIRED TO MAINTAIN PLASTICITY OF THE CONCRETE DECK DURING PLACEMENT.

07-15
LATEST REVISION DATE

APPROVED BY BRIDGE ENGINEER

IOWA DOT Highway Division

STANDARD DESIGN - 40' ROADWAY, 3 SPAN BRIDGES

ROLLED STEEL BEAM BRIDGES

OCTOBER, 2014

SUPERSTRUCTURE QUANTITIES 45° SKEW

RS40-035-14

REVISED 07-2015 - CHANGED NOTE 1, CONCRETE PLACEMENT NOTE TO ACCOUNT FOR THE POSSIBLE ADDITION OF A RETARDING ADMIXTURE TO THE CONCRETE.

EPOXY COATED REINFORCING BAR LIST

ONE SUPERSTRUCTURE AND TWO ABUTMENTS

BRIDGE LENGTH

BAR	LOCATION	SHAPE	160'-0 NO.	160'-0 LENGTH	160'-0 WEIGHT	180'-0 NO.	180'-0 LENGTH	180'-0 WEIGHT	200'-0 NO.	200'-0 LENGTH	200'-0 WEIGHT	220'-0 NO.	220'-0 LENGTH	220'-0 WEIGHT
6a1	SLAB TRANSVERSE, TOP & BOTTOM		391	42'-10	25,156	439	42'-10	28,244	487	42'-10	31,332	535	42'-10	34,420
6b1	SLAB LONGITUDINAL TOP & BOTTOM		485	34'-6	25,133	485	38'-6	28,047	582	35'-10	31,325	582	39'-2	34,239
5d2	ABUTMENT DIAPHRAGM, LONGITUDINAL		16	21'-5	358	16	21'-5	358	16	21'-5	358	16	21'-5	358
5d5	ABUTMENT DIAPHRAGM, LONGITUDINAL - END		16	5'-0	84	16	5'-0	84	16	5'-0	84	16	5'-0	84
5d6	ABUTMENT DIAPHRAGM, LONGITUDINAL - B.F.		16	22'-6	376	16	22'-6	376	16	22'-6	376	16	22'-6	376
5d7	PAVING NOTCH, LONGITUDINAL		8	22'-3	186	8	22'-3	186	8	22'-3	186	8	22'-3	186
5d8	ABUT. DIAPHRAGM WING EXT. LONGIT.		-	-	-	-	-	-	-	-	-	-	-	-
5d9	ABUT. DIAPHRAGM WING EXT. LONGIT.		-	-	-	-	-	-	-	-	-	-	-	-
8f1	ABUTMENT FOOTING LONGITUDINAL - B.F.		36	23'-10	2291	36	23'-10	2291	36	23'-10	2291	36	23'-10	2291
8f3	ABUTMENT EXTENSION LONGITUDINAL		-	-	-	-	-	-	-	-	-	-	-	-
8f4	ABUTMENT EXTENSION LONGITUDINAL		-	-	-	-	-	-	-	-	-	-	-	-
8g1	ABUTMENT VERTICAL - B.F.		136	6'-5	2331	136	6'-5	2331	136	6'-8	2421	136	6'-11	2512
8g3	ABUTMENT DIAPHRAGM VERTICAL - B.F.		62	15'-3	2525	62	15'-3	2525	62	15'-3	2525	62	15'-3	2525
6g4	ABUTMENT DIAPHRAGM WING EXT. VERT.		-	-	-	-	-	-	-	-	-	-	-	-
5h1	WING HORIZONTAL BACK FACE		28	6'-8	195	28	6'-8	195	28	6'-8	195	28	6'-8	195
5h2	WING HORIZONTAL BACK FACE		56	4'-11	288	56	4'-11	288	56	4'-11	288	56	4'-11	288
5h3	WING HORIZONTAL TRAFFIC FACE		28	6'-9	198	28	6'-9	198	28	6'-9	198	28	6'-9	198
5h4	WING HORIZONTAL TRAFFIC FACE		-	-	-	-	-	-	-	-	-	-	-	-
5j1	TOP OF SLAB, TRANSVERSE, AT RAIL		390	6'-3	2543	438	6'-3	2856	486	6'-3	3169	534	6'-3	3482
5k1	PAVING NOTCH, TRANSVERSE		66	4'-3	293	66	4'-3	293	66	4'-3	293	66	4'-3	293
5k2	PAVING NOTCH, TRANSVERSE		66	3'-5	236	66	3'-5	236	66	3'-5	236	66	3'-5	236
5p1	ABUTMENT HOOPS		148	10'-6	1621	148	10'-6	1621	148	10'-6	1621	136	10'-6	1490
6p3	ABUTMENT BOTTOM AT PILES		32	6'-8	321	32	6'-8	321	32	6'-8	321	36	6'-8	361
5p4	ABUTMENT EXTENSION HOOPS		-	-	-	-	-	-	-	-	-	-	-	-
5s1	WING, VERTICAL		64	5'-7	373	64	5'-7	373	64	5'-7	373	64	6'-2	412
4t1	UNDER BEAMS AT ABUTMENTS		12	4'-7	37	12	4'-7	37	12	4'-7	37	12	4'-7	37
4t2	ABUTMENT DIAPHRAGM, LONGITUDINAL F.F.		36	7'-6	181	36	7'-6	181	36	7'-6	181	36	7'-6	181
	* PILE SPIRAL - NO. 2 BAR		16	38'-6	103	16	38'-6	103	16	38'-6	103	18	38'-6	116
	* SPIRAL SPACER $L\frac{7}{8}\times\frac{7}{8}\times$ 0.70		48	1'-10	62	48	1'-10	62	48	1'-10	62	54	1'-10	70
	** REINFORCING STEEL EPOXY COATED (LBS.)				64,891			71,206			77,975			84,350

BAR	240'-0 NO.	240'-0 LENGTH	240'-0 WEIGHT	260'-0 NO.	260'-0 LENGTH	260'-0 WEIGHT	280'-0 NO.	280'-0 LENGTH	280'-0 WEIGHT	300'-0 NO.	300'-0 LENGTH	300'-0 WEIGHT	320'-0 NO.	320'-0 LENGTH	320'-0 WEIGHT	340'-0 NO.	340'-0 LENGTH	340'-0 WEIGHT
6a1	583	42'-10	37,508	631	42'-10	40,596	679	42'-10	43,684	727	42'-10	46,773	775	42'-10	49,861	823	42'-10	52,949
6b1	679	36'-9	37,480	679	39'-8	40,455	776	37'-6	43,709	776	40'-0	46,623	873	38'-0	49,828	970	36'-6	53,179
5d2	16	21'-5	358	16	21'-5	358	16	21'-5	358	16	21'-5	358	16	21'-5	358	16	21'-5	358
5d5	16	5'-0	84	16	5'-0	84	16	5'-0	84	16	5'-0	84	16	5'-0	84	16	5'-0	84
5d6	16	22'-6	376	16	22'-6	376	16	22'-6	376	16	22'-6	376	16	22'-6	376	16	22'-6	376
5d7	8	22'-3	186	8	22'-3	186	8	22'-3	186	8	22'-3	186	8	22'-3	186	8	22'-3	186
5d8	-	-	-	-	-	-	-	-	-	-	-	-	-	-	-	24	10'-9	269
5d9	-	-	-	-	-	-	-	-	-	-	-	-	-	-	-	24	10'-8	267
8f1	36	23'-10	2291	36	23'-10	2291	36	26'-11	2291	36	23'-10	2291	36	23'-10	2291	36	23'-10	2291
8f3	-	-	-	-	-	-	-	-	-	-	-	-	-	-	-	16	10'-2	435
8f4	-	-	-	-	-	-	-	-	-	-	-	-	-	-	-	16	8'-8	371
8g1	136	6'-11	2512	136	7'-1	2573	136	7'-2	2603	136	7'-2	2603	136	7'-2	2603	136	7'-6	2724
8g3	62	15'-3	2525	62	15'-3	2525	62	15'-3	2525	62	15'-3	2525	62	15'-3	2525	62	15'-3	2525
6g4	-	-	-	-	-	-	-	-	-	-	-	-	-	-	-	40	6'-0	361
5h1	28	6'-8	195	28	6'-8	195	28	6'-8	195	28	6'-8	195	28	6'-8	195	36	6'-8	251
5h2	56	4'-11	288	56	4'-11	288	56	4'-11	288	56	4'-11	288	56	4'-11	288	12	4'-11	62
5h3	28	6'-9	198	28	6'-9	198	28	6'-9	198	28	6'-9	198	28	6'-9	198	36	6'-9	254
5h4	-	-	-	-	-	-	-	-	-	-	-	-	-	-	-	12	4'-11	62
5j1	582	6'-3	3794	630	6'-3	4107	678	6'-3	4420	726	6'-3	4733	774	6'-3	5046	822	6'-3	5359
5k1	66	4'-3	293	66	4'-3	293	66	4'-3	293	66	4'-3	293	66	4'-3	293	66	4'-3	293
5k2	66	3'-5	236	66	3'-5	236	66	3'-5	236	66	3'-5	236	66	3'-5	236	66	3'-5	236
5p1	136	10'-6	1490	136	10'-6	1490	152	10'-6	1665	152	10'-6	1665	152	10'-6	1665	152	10'-6	1665
6p3	36	6'-8	361	36	6'-8	361	40	6'-8	401	40	6'-8	401	40	6'-8	401	40	6'-8	401
5p4	-	-	-	-	-	-	-	-	-	-	-	-	-	-	-	24	10'-8	267
5s1	64	6'-2	412	64	6'-2	412	64	6'-2	412	64	6'-2	412	64	6'-2	412	64	6'-11	462
4t1	12	4'-7	37	12	4'-7	37	12	4'-7	37	12	4'-7	37	12	4'-7	37	12	4'-7	37
4t2	36	7'-6	181	36	7'-6	181	36	7'-6	181	36	7'-6	181	36	7'-6	181	36	7'-6	181
* PILE SPIRAL - NO. 2 BAR	18	38'-6	116	18	38'-6	116	20	38'-6	129	20	38'-6	129	20	38'-6	129	24	38'-6	155
* SPIRAL SPACER $L\frac{7}{8}\times\frac{7}{8}\times$ 0.70	54	1'-10	70	54	1'-10	70	60	1'-10	77	60	1'-10	77	60	1'-10	77	72	1'-10	93
** REINFORCING STEEL EPOXY COATED (LBS.)			90,991			97,428			104,348			110,664			117,270			126,153

* EPOXY COATING NOT REQUIRED
** BARRIER RAIL REINFORCING NOT INCLUDED

BENT BAR DETAILS

NOTE: ALL DIMENSIONS ARE OUT TO OUT.
D= PIN DIAMETER

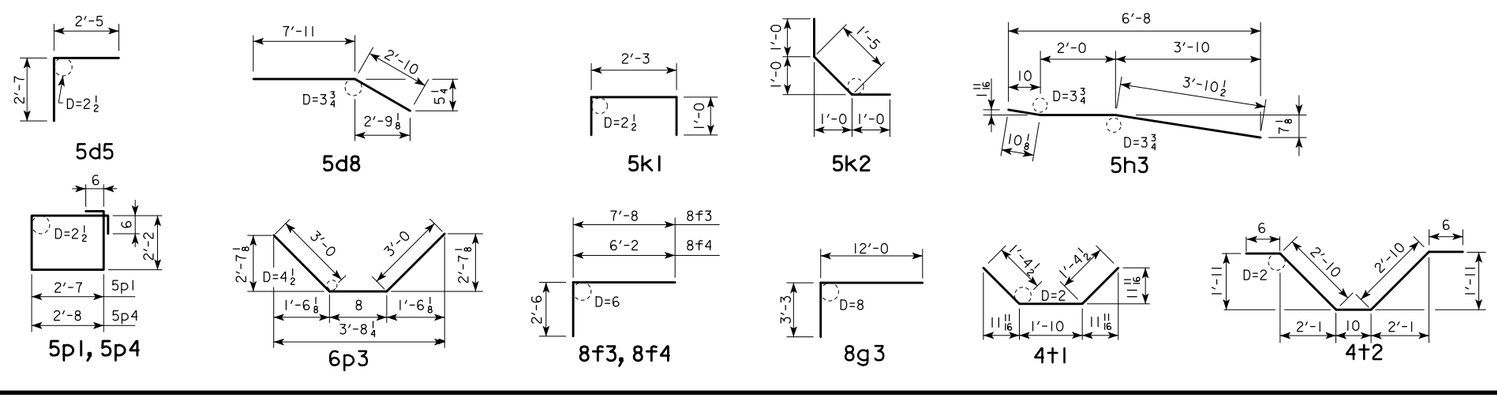

NOTE: THE REINFORCING STEEL QUANTITY IS TO BE INCLUDED ON THE SUMMARY QUANTITIES SHEET IN THE PLAN.

LATEST REVISION DATE

APPROVED BY BRIDGE ENGINEER

IOWADOT Highway Division

STANDARD DESIGN - 40' ROADWAY, 3 SPAN BRIDGES

ROLLED STEEL BEAM BRIDGES

OCTOBER, 2014

DECK AND ABUTMENT REINFORCEMENT 0° SKEW

RS40-036-14

EPOXY COATED REINFORCING BAR LIST

ONE SUPERSTRUCTURE AND TWO ABUTMENTS

BRIDGE LENGTH

BAR	LOCATION	SHAPE	160'-0 NO.	160'-0 LENGTH	160'-0 WEIGHT	180'-0 NO.	180'-0 LENGTH	180'-0 WEIGHT	200'-0 NO.	200'-0 LENGTH	200'-0 WEIGHT	220'-0 NO.	220'-0 LENGTH	220'-0 WEIGHT
6a1	SLAB TRANSVERSE, TOP & BOTTOM		373	42'-10	23,998	421	42'-10	27,086	469	42'-10	30,174	517	42'-10	33,262
6a2	SLAB TRANSVERSE, TOP-ENDS		16	VARIES	528	16	VARIES	528	16	VARIES	528	16	VARIES	528
6a3	SLAB TRANSVERSE, BOTTOM-ENDS		18	VARIES	594	18	VARIES	594	18	VARIES	594	18	VARIES	594
6b1	SLAB LONGITUDINAL TOP & BOTTOM		485	34'-6	25,133	485	38'-6	28,047	582	35'-10	31,325	582	39'-2	34,239
5d2	ABUTMENT DIAPHRAGM, LONGITUDINAL		16	21'-5	358	16	21'-5	358	16	21'-5	358	16	21'-5	358
5d5	ABUTMENT DIAPHRAGM, LONGITUDINAL - END		16	5'-0	84	16	5'-0	84	16	5'-0	84	16	5'-0	84
5d6	ABUTMENT DIAPHRAGM, LONGITUDINAL - B.F.		16	22'-10	382	16	22'-10	382	16	22'-10	382	16	22'-10	382
5d7	PAVING NOTCH, LONGITUDINAL		8	22'-9	190	8	22'-9	190	8	22'-9	190	8	22'-9	190
5d8	ABUT. DIAPHRAGM WING EXT. LONGIT.		-	-	-	-	-	-	-	-	-	-	-	-
5d9	ABUT. DIAPHRAGM WING EXT. LONGIT.		-	-	-	-	-	-	-	-	-	-	-	-
8f1	ABUTMENT FOOTING LONGITUDINAL - B.F.		36	24'-2	2323	36	24'-2	2323	36	24'-2	2323	36	24'-2	2323
8f3	ABUTMENT EXTENSION LONGITUDINAL		-	-	-	-	-	-	-	-	-	-	-	-
8f4	ABUTMENT EXTENSION LONGITUDINAL		-	-	-	-	-	-	-	-	-	-	-	-
8g1	ABUTMENT VERTICAL - B.F.		136	6'-5	2331	136	6'-5	2331	136	6'-8	2421	136	6'-11	2512
8g3	ABUTMENT DIAPHRAGM VERTICAL - B.F.		62	15'-3	2525	62	15'-3	2525	62	15'-3	2525	62	15'-3	2525
6g4	ABUTMENT DIAPHRAGM WING EXT. VERT.		-	-	-	-	-	-	-	-	-	-	-	-
5h1	WING HORIZONTAL BACK FACE		28	6'-8	195	28	6'-8	195	28	6'-8	195	28	6'-8	195
5h2	WING HORIZONTAL BACK FACE		56	4'-11	288	56	4'-11	288	56	4'-11	288	56	4'-11	288
5h3	WING HORIZONTAL TRAFFIC FACE		28	6'-9	198	28	6'-9	198	28	6'-9	198	28	6'-9	198
5h4	WING HORIZONTAL TRAFFIC FACE		-	-	-	-	-	-	-	-	-	-	-	-
5j1	TOP OF SLAB, TRANSVERSE, AT RAIL		386	6'-3	2517	434	6'-3	2830	482	6'-3	3143	530	6'-3	3455
5k1	PAVING NOTCH, TRANSVERSE		64	4'-3	284	64	4'-3	284	64	4'-3	284	64	4'-3	284
5k2	PAVING NOTCH, TRANSVERSE		64	3'-5	229	64	3'-5	229	64	3'-5	229	64	3'-5	229
5p1	ABUTMENT HOOPS		140	10'-6	1534	140	10'-6	1534	140	10'-6	1534	128	10'-6	1402
5p2	ABUTMENT HOOPS AT ENDS		8	10'-8	90	8	10'-8	90	8	10'-8	90	8	10'-8	90
6p3	ABUTMENT BOTTOM AT PILES		32	6'-8	321	32	6'-8	321	32	6'-8	321	36	6'-8	361
5p4	ABUTMENT EXTENSION HOOPS		-	-	-	-	-	-	-	-	-	-	-	-
5s1	WING, VERTICAL		64	5'-7	373	64	5'-7	373	64	5'-7	373	64	6'-2	412
4t1	UNDER BEAMS AT ABUTMENTS		12	4'-7	37	12	4'-7	37	12	4'-7	37	12	4'-7	37
4t2	ABUTMENT DIAPHRAGM, LONGITUDINAL F.F.		36	7'-6	181	36	7'-6	181	36	7'-6	181	36	7'-6	181
	* PILE SPIRAL - NO. 2 BAR		16	38'-6	103	16	38'-6	103	16	38'-6	103	18	38'-6	116
	* SPIRAL SPACER $L\frac{7}{8}\times\frac{7}{8}\times\frac{1}{8}\times$ 0.70		48	1'-10	62	48	1'-10	62	48	1'-10	62	54	1'-10	70
	** REINFORCING STEEL EPOXY COATED (LBS.)				64,858			71,173			77,942			84,315

BAR	LOCATION	240'-0 NO.	240'-0 LENGTH	240'-0 WEIGHT	260'-0 NO.	260'-0 LENGTH	260'-0 WEIGHT	280'-0 NO.	280'-0 LENGTH	280'-0 WEIGHT	300'-0 NO.	300'-0 LENGTH	300'-0 WEIGHT	320'-0 NO.	320'-0 LENGTH	320'-0 WEIGHT	340'-0 NO.	340'-0 LENGTH	340'-0 WEIGHT
6a1	SLAB TRANSVERSE, TOP & BOTTOM	565	42'-10	36,350	613	42'-10	39,438	661	42'-10	42,526	709	42'-10	45,614	757	42'-10	48,703	805	42'-10	51,791
6a2	SLAB TRANSVERSE, TOP-ENDS	16	VARIES	528	16	VARIES	528	16	VARIES	528	16	VARIES	528	16	VARIES	528	16	VARIES	528
6a3	SLAB TRANSVERSE, BOTTOM-ENDS	18	VARIES	594	18	VARIES	594	18	VARIES	594	18	VARIES	594	18	VARIES	594	18	VARIES	594
6b1	SLAB LONGITUDINAL TOP & BOTTOM	679	36'-9	37,480	679	39'-8	40,455	776	37'-6	43,709	776	40'-0	46,623	873	38'-0	49,828	970	36'-6	53,179
5d2	ABUTMENT DIAPHRAGM, LONGITUDINAL	16	21'-5	358	16	21'-5	358	16	21'-5	358	16	21'-5	358	16	21'-5	358	16	21'-5	358
5d5	ABUTMENT DIAPHRAGM, LONGITUDINAL - END	16	5'-0	84	16	5'-0	84	16	5'-0	84	16	5'-0	84	16	5'-0	84	16	5'-0	84
5d6	ABUTMENT DIAPHRAGM, LONGITUDINAL - B.F.	16	22'-10	382	16	22'-10	382	16	22'-10	382	16	22'-10	382	16	22'-10	382	16	22'-10	382
5d7	PAVING NOTCH, LONGITUDINAL	8	22'-9	190	8	22'-9	190	8	22'-9	190	8	22'-9	190	8	22'-9	190	8	22'-9	190
5d8	ABUT. DIAPHRAGM WING EXT. LONGIT.	-	-	-	-	-	-	-	-	-	-	-	-	-	-	-	24	10'-9	269
5d9	ABUT. DIAPHRAGM WING EXT. LONGIT.	-	-	-	-	-	-	-	-	-	-	-	-	-	-	-	24	10'-8	267
8f1	ABUTMENT FOOTING LONGITUDINAL - B.F.	36	24'-2	2323	36	24'-2	2323	36	24'-2	2323	36	24'-2	2323	36	24'-2	2323	36	24'-2	2323
8f3	ABUTMENT EXTENSION LONGITUDINAL	-	-	-	-	-	-	-	-	-	-	-	-	-	-	-	16	10'-2	435
8f4	ABUTMENT EXTENSION LONGITUDINAL	-	-	-	-	-	-	-	-	-	-	-	-	-	-	-	16	8'-8	371
8g1	ABUTMENT VERTICAL - B.F.	136	6'-11	2512	136	7'-1	2573	136	7'-2	2603	136	7'-2	2603	136	7'-2	2603	136	7'-6	2724
8g3	ABUTMENT DIAPHRAGM VERTICAL - B.F.	62	15'-3	2525	62	15'-3	2525	62	15'-3	2525	62	15'-3	2525	62	15'-3	2525	62	15'-3	2525
6g4	ABUTMENT DIAPHRAGM WING EXT. VERT.	-	-	-	-	-	-	-	-	-	-	-	-	-	-	-	40	6'-0	361
5h1	WING HORIZONTAL BACK FACE	28	6'-8	195	28	6'-8	195	28	6'-8	195	28	6'-8	195	28	6'-8	195	36	6'-8	251
5h2	WING HORIZONTAL BACK FACE	56	4'-11	288	56	4'-11	288	56	4'-11	288	56	4'-11	288	56	4'-11	288	12	4'-11	62
5h3	WING HORIZONTAL TRAFFIC FACE	28	6'-9	198	28	6'-9	198	28	6'-9	198	28	6'-9	198	28	6'-9	198	36	6'-9	254
5h4	WING HORIZONTAL TRAFFIC FACE	-	-	-	-	-	-	-	-	-	-	-	-	-	-	-	12	4'-11	62
5j1	TOP OF SLAB, TRANSVERSE, AT RAIL	578	6'-3	3768	626	6'-3	4081	674	6'-3	4394	722	6'-3	4707	770	6'-3	5020	818	6'-3	5333
5k1	PAVING NOTCH, TRANSVERSE	64	4'-3	284	64	4'-3	284	64	4'-3	284	64	4'-3	284	64	4'-3	284	64	4'-3	284
5k2	PAVING NOTCH, TRANSVERSE	64	3'-5	229	64	3'-5	229	64	3'-5	229	64	3'-5	229	64	3'-5	229	64	3'-5	229
5p1	ABUTMENT HOOPS	128	10'-6	1402	128	10'-6	1402	144	10'-6	1578	144	10'-6	1578	144	10'-6	1578	144	10'-6	1578
5p2	ABUTMENT HOOPS AT ENDS	8	10'-8	90	8	10'-8	90	8	10'-8	90	8	10'-8	90	8	10'-8	90	8	10'-8	90
6p3	ABUTMENT BOTTOM AT PILES	36	6'-8	361	36	6'-8	361	40	6'-8	401	40	6'-8	401	40	6'-8	401	40	6'-8	401
5p4	ABUTMENT EXTENSION HOOPS	-	-	-	-	-	-	-	-	-	-	-	-	-	-	-	24	10'-8	267
5s1	WING, VERTICAL	64	6'-2	412	64	6'-2	412	64	6'-2	412	64	6'-2	412	64	6'-2	412	64	6'-11	462
4t1	UNDER BEAMS AT ABUTMENTS	12	4'-7	37	12	4'-7	37	12	4'-7	37	12	4'-7	37	12	4'-7	37	12	4'-7	37
4t2	ABUTMENT DIAPHRAGM, LONGITUDINAL F.F.	36	7'-6	181	36	7'-6	181	36	7'-6	181	36	7'-6	181	36	7'-6	181	36	7'-6	181
	* PILE SPIRAL - NO. 2 BAR	18	38'-6	116	18	38'-6	116	20	38'-6	129	20	38'-6	129	20	38'-6	129	24	38'-6	155
	* SPIRAL SPACER $L\frac{7}{8}\times\frac{7}{8}\times\frac{1}{8}\times$ 0.70	54	1'-10	70	54	1'-10	70	60	1'-10	77	60	1'-10	77	60	1'-10	77	72	1'-10	93
	** REINFORCING STEEL EPOXY COATED (LBS.)			90,957			97,394			104,315			110,630			117,237			126,120

* EPOXY COATING NOT REQUIRED
** BARRIER RAIL REINFORCING NOT INCLUDED

BENT BAR DETAILS

NOTE: ALL DIMENSIONS ARE OUT TO OUT.
D= PIN DIAMETER

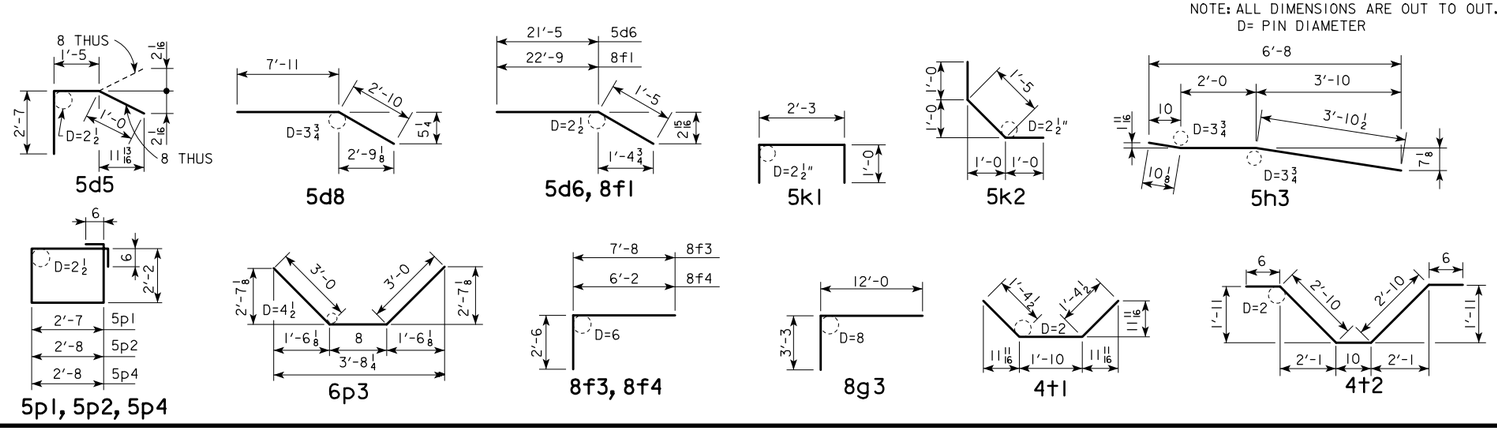

NOTE: THE REINFORCING STEEL QUANTITY IS TO BE INCLUDED ON THE SUMMARY QUANTITIES SHEET IN THE PLAN.

LATEST REVISION DATE

APPROVED BY BRIDGE ENGINEER

IOWA DOT Highway Division

STANDARD DESIGN - 40' ROADWAY, 3 SPAN BRIDGES

ROLLED STEEL BEAM BRIDGES

OCTOBER, 2014

DECK AND ABUTMENT REINFORCEMENT 10° SKEW

RS40-037-14

EPOXY COATED REINFORCING BAR LIST

ONE SUPERSTRUCTURE AND TWO ABUTMENTS

BRIDGE LENGTH

BAR	LOCATION	SHAPE	160'-0 NO.	160'-0 LENGTH	160'-0 WEIGHT	180'-0 NO.	180'-0 LENGTH	180'-0 WEIGHT	200'-0 NO.	200'-0 LENGTH	200'-0 WEIGHT	220'-0 NO.	220'-0 LENGTH	220'-0 WEIGHT
6a1	SLAB TRANSVERSE, TOP & BOTTOM		355	42'-10	22,840	403	42'-10	25,928	451	42'-10	29,016	499	42'-10	32,104
6a2	SLAB TRANSVERSE, TOP-ENDS		34	VARIES	1116	34	VARIES	1116	34	VARIES	1116	34	VARIES	1116
6a3	SLAB TRANSVERSE, BOTTOM-ENDS		36	VARIES	1181	36	VARIES	1181	36	VARIES	1181	36	VARIES	1181
6b1	SLAB LONGITUDINAL TOP & BOTTOM		485	34'-6	25,133	485	38'-6	28,047	582	35'-10	31,325	582	39'-2	34,239
5d2	ABUTMENT DIAPHRAGM, LONGITUDINAL		16	22'-5	375	16	22'-5	375	16	22'-5	375	16	22'-5	375
5d5	ABUTMENT DIAPHRAGM, LONGITUDINAL - END		16	5'-0	84	16	5'-0	84	16	5'-0	84	16	5'-0	84
5d6	ABUTMENT DIAPHRAGM, LONGITUDINAL - B.F.		16	23'-10	398	16	23'-10	398	16	23'-10	398	16	23'-10	398
5d7	PAVING NOTCH, LONGITUDINAL		8	23'-8	197	8	23'-8	197	8	23'-8	197	8	23'-8	197
5d8	ABUT. DIAPHRAGM WING EXT. LONGIT.		-	-	-	-	-	-	-	-	-	-	-	-
5d9	ABUT. DIAPHRAGM WING EXT. LONGIT.		-	-	-	-	-	-	-	-	-	-	-	-
8f1	ABUTMENT FOOTING LONGITUDINAL - B.F.		36	25'-1	2412	36	25'-1	2412	36	25'-1	2412	36	25'-1	2412
8f3	ABUTMENT EXTENSION LONGITUDINAL		-	-	-	-	-	-	-	-	-	-	-	-
8f4	ABUTMENT EXTENSION LONGITUDINAL		-	-	-	-	-	-	-	-	-	-	-	-
8f5	ABUTMENT EXTENSION LONGITUDINAL		-	-	-	-	-	-	-	-	-	-	-	-
8g1	ABUTMENT VERTICAL - B.F.		136	6'-5	2331	136	6'-5	2331	136	6'-8	2421	136	6'-11	2512
8g3	ABUTMENT DIAPHRAGM VERTICAL - B.F.		62	15'-3	2525	62	15'-3	2525	62	15'-3	2525	62	15'-3	2525
6g4	ABUTMENT DIAPHRAGM WING EXT. VERT.		-	-	-	-	-	-	-	-	-	-	-	-
5h1	WING HORIZONTAL BACK FACE		28	6'-8	195	28	6'-8	195	28	6'-8	195	28	6'-8	195
5h2	WING HORIZONTAL BACK FACE		56	4'-11	288	56	4'-11	288	56	4'-11	288	56	4'-11	288
5h3	WING HORIZONTAL TRAFFIC FACE		28	6'-9	198	28	6'-9	198	28	6'-9	198	28	6'-9	198
5h4	WING HORIZONTAL TRAFFIC FACE		-	-	-	-	-	-	-	-	-	-	-	-
5j1	TOP OF SLAB, TRANSVERSE, AT RAIL		384	6'-3	2504	432	6'-3	2817	480	6'-3	3129	528	6'-3	3442
5k1	PAVING NOTCH, TRANSVERSE		64	4'-3	284	64	4'-3	284	64	4'-3	284	64	4'-3	284
5k2	PAVING NOTCH, TRANSVERSE		64	3'-5	229	64	3'-5	229	64	3'-5	229	64	3'-5	229
5p1	ABUTMENT HOOPS		140	10'-6	1534	140	10'-6	1534	140	10'-6	1534	128	10'-6	1402
5p2	ABUTMENT HOOPS AT ENDS		8	11'-0	92	8	11'-0	92	8	11'-0	92	8	11'-0	92
6p3	ABUTMENT BOTTOM AT PILES		32	6'-8	321	32	6'-8	321	32	6'-8	321	36	6'-8	361
5p4	ABUTMENT EXTENSION HOOPS		-	-	-	-	-	-	-	-	-	-	-	-
5s1	WING, VERTICAL		64	5'-7	373	64	5'-7	373	64	5'-7	373	64	6'-2	412
4t1	UNDER BEAMS AT ABUTMENTS		12	4'-7	37	12	4'-7	37	12	4'-7	37	12	4'-7	37
4t2	ABUTMENT DIAPHRAGM, LONGITUDINAL F.F.		36	7'-6	181	36	7'-6	181	36	7'-6	181	36	7'-6	181
	* PILE SPIRAL - NO. 2 BAR		16	38'-6	103	16	38'-6	103	16	38'-6	103	18	38'-6	116
	* SPIRAL SPACER L 7/8 x 7/8 x 0.70		48	1'-10	62	48	1'-10	62	48	1'-10	62	54	1'-10	70
	** REINFORCING STEEL EPOXY COATED (LBS.)				64,993			71,308			78,076			84,450

BAR	240'-0 NO.	240'-0 LENGTH	240'-0 WEIGHT	260'-0 NO.	260'-0 LENGTH	260'-0 WEIGHT	280'-0 NO.	280'-0 LENGTH	280'-0 WEIGHT	300'-0 NO.	300'-0 LENGTH	300'-0 WEIGHT	320'-0 NO.	320'-0 LENGTH	320'-0 WEIGHT	340'-0 NO.	340'-0 LENGTH	340'-0 WEIGHT
6a1	547	42'-10	35,192	595	42'-10	38,280	643	42'-10	41,368	691	42'-10	44,456	739	42'-10	47,545	787	42'-10	50,633
6a2	34	VARIES	1116	34	VARIES	1116	34	VARIES	1116	34	VARIES	1116	34	VARIES	1116	34	VARIES	1116
6a3	36	VARIES	1181	36	VARIES	1181	36	VARIES	1181	36	VARIES	1181	36	VARIES	1181	36	VARIES	1181
6b1	679	36'-9	37,480	679	39'-8	40,455	776	37'-6	43,709	776	40'-0	46,623	873	38'-0	49,828	970	36'-6	53,179
5d2	16	22'-5	375	16	22'-5	375	16	22'-5	375	16	22'-5	375	16	22'-5	375	16	22'-5	375
5d5	16	5'-0	84	16	5'-0	84	16	5'-0	84	16	5'-0	84	16	5'-0	84	16	5'-0	84
5d6	16	23'-10	398	16	23'-10	398	16	23'-10	398	16	23'-10	398	16	23'-10	398	16	23'-10	398
5d7	8	23'-8	197	8	23'-8	197	8	23'-8	197	8	23'-8	197	8	23'-8	197	8	23'-8	197
5d8	-	-	-	-	-	-	-	-	-	-	-	-	-	-	-	24	10'-9	269
5d9	-	-	-	-	-	-	-	-	-	-	-	-	-	-	-	24	10'-8	267
8f1	36	25'-1	2412	36	25'-1	2412	36	25'-1	2412	36	25'-1	2412	36	25'-1	2412	36	25'-1	2412
8f3	-	-	-	-	-	-	-	-	-	-	-	-	-	-	-	16	10'-3	438
8f4	-	-	-	-	-	-	-	-	-	-	-	-	-	-	-	8	8'-9	187
8f5	-	-	-	-	-	-	-	-	-	-	-	-	-	-	-	8	8'-7	184
8g1	136	6'-11	2512	136	7'-1	2573	136	7'-2	2603	136	7'-2	2603	136	7'-2	2603	136	7'-6	2724
8g3	62	15'-3	2525	62	15'-3	2525	62	15'-3	2525	62	15'-3	2525	62	15'-3	2525	62	15'-3	2525
6g4	-	-	-	-	-	-	-	-	-	-	-	-	-	-	-	40	6'-0	361
5h1	28	6'-8	195	28	6'-8	195	28	6'-8	195	28	6'-8	195	28	6'-8	195	36	6'-8	251
5h2	56	4'-11	288	56	4'-11	288	56	4'-11	288	56	4'-11	288	56	4'-11	288	12	4'-11	62
5h3	28	6'-9	198	28	6'-9	198	28	6'-9	198	28	6'-9	198	28	6'-9	198	36	6'-9	254
5h4	-	-	-	-	-	-	-	-	-	-	-	-	-	-	-	12	4'-11	62
5j1	576	6'-3	3755	624	6'-3	4068	672	6'-3	4381	720	6'-3	4694	768	6'-3	5007	816	6'-3	5320
5k1	64	4'-3	284	64	4'-3	284	64	4'-3	284	64	4'-3	284	64	4'-3	284	64	4'-3	284
5k2	64	3'-5	229	64	3'-5	229	64	3'-5	229	64	3'-5	229	64	3'-5	229	64	3'-5	229
5p1	128	10'-6	1402	128	10'-6	1402	144	10'-6	1578	144	10'-6	1578	144	10'-6	1578	144	10'-6	1578
5p2	8	11'-0	92	8	11'-0	92	8	11'-0	92	8	11'-0	92	8	11'-0	92	8	11'-0	92
6p3	36	6'-8	361	36	6'-8	361	40	6'-8	401	40	6'-8	401	40	6'-8	401	40	6'-8	401
5p4	-	-	-	-	-	-	-	-	-	-	-	-	-	-	-	24	10'-8	267
5s1	64	6'-2	412	64	6'-2	412	64	6'-2	412	64	6'-2	412	64	6'-2	412	64	6'-11	462
4t1	12	4'-7	37	12	4'-7	37	12	4'-7	37	12	4'-7	37	12	4'-7	37	12	4'-7	37
4t2	36	7'-6	181	36	7'-6	181	36	7'-6	181	36	7'-6	181	36	7'-6	181	36	7'-6	181
* PILE SPIRAL - NO. 2 BAR	18	38'-6	116	18	38'-6	116	20	38'-6	129	20	38'-6	129	20	38'-6	129	24	38'-6	155
* SPIRAL SPACER L 7/8 x 7/8 x 0.70	54	1'-10	70	54	1'-10	70	60	1'-10	77	60	1'-10	77	60	1'-10	77	72	1'-10	93
** REINFORCING STEEL EPOXY COATED (LBS.)			91,092			97,529			104,450			110,765			117,372			126,258

* EPOXY COATING NOT REQUIRED ** BARRIER RAIL REINFORCING NOT INCLUDED

BENT BAR DETAILS

NOTE: ALL DIMENSIONS ARE OUT TO OUT.
D= PIN DIAMETER

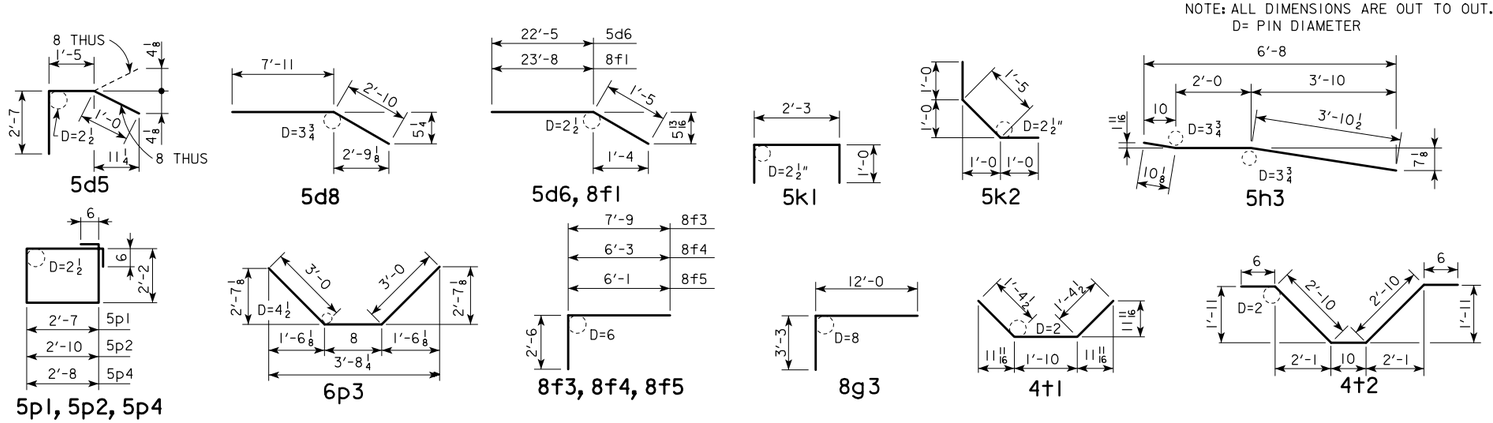

NOTE: THE REINFORCING STEEL QUANTITY IS TO BE INCLUDED ON THE SUMMARY QUANTITIES SHEET IN THE PLAN.

LATEST REVISION DATE

APPROVED BY BRIDGE ENGINEER

IOWA DOT Highway Division

STANDARD DESIGN - 40' ROADWAY, 3 SPAN BRIDGES

ROLLED STEEL BEAM BRIDGES

OCTOBER, 2014

DECK AND ABUTMENT REINFORCEMENT 20° SKEW

RS40-038-14

EPOXY COATED REINFORCING BAR LIST

ONE SUPERSTRUCTURE AND TWO ABUTMENTS

BRIDGE LENGTH

BAR	LOCATION	SHAPE	160'-0 NO.	160'-0 LENGTH	160'-0 WEIGHT	180'-0 NO.	180'-0 LENGTH	180'-0 WEIGHT	200'-0 NO.	200'-0 LENGTH	200'-0 WEIGHT	220'-0 NO.	220'-0 LENGTH	220'-0 WEIGHT
6a1	SLAB TRANSVERSE, TOP & BOTTOM		337	42'-10	21,682	385	42'-10	24,770	433	42'-10	27,858	481	42'-10	30,946
6a2	SLAB TRANSVERSE, TOP-ENDS		54	VARIES	1717	54	VARIES	1717	54	VARIES	1717	54	VARIES	1717
6a3	SLAB TRANSVERSE, BOTTOM-ENDS		54	VARIES	1775	54	VARIES	1775	54	VARIES	1775	54	VARIES	1775
6b1	SLAB LONGITUDINAL TOP & BOTTOM		485	34'-6	25,133	485	38'-6	28,047	582	35'-10	31,325	582	39'-2	34,239
5d2	ABUTMENT DIAPHRAGM, LONGITUDINAL		16	24'-2	404	16	24'-2	404	16	24'-2	404	16	24'-2	404
5d5	ABUTMENT DIAPHRAGM, LONGITUDINAL - END		16	5'-0	84	16	5'-0	84	16	5'-0	84	16	5'-0	84
5d6	ABUTMENT DIAPHRAGM, LONGITUDINAL - B.F.		16	25'-8	429	16	25'-8	429	16	25'-8	429	16	25'-8	429
5d7	PAVING NOTCH, LONGITUDINAL		8	25'-7	214	8	25'-7	214	8	25'-7	214	8	25'-7	214
5d8	ABUT. DIAPHRAGM WING EXT. LONGIT.		-	-	-	-	-	-	-	-	-	-	-	-
5d9	ABUT. DIAPHRAGM WING EXT. LONGIT.		-	-	-	-	-	-	-	-	-	-	-	-
8f1	ABUTMENT FOOTING LONGITUDINAL - B.F.		36	26'-11	2588	36	26'-11	2588	36	26'-11	2588	36	26'-11	2588
8f3	ABUTMENT EXTENSION LONGITUDINAL		-	-	-	-	-	-	-	-	-	-	-	-
8f4	ABUTMENT EXTENSION LONGITUDINAL		-	-	-	-	-	-	-	-	-	-	-	-
8f5	ABUTMENT EXTENSION LONGITUDINAL		-	-	-	-	-	-	-	-	-	-	-	-
8g1	ABUTMENT VERTICAL - B.F.		136	6'-5	2331	136	6'-5	2331	136	6'-8	2421	136	6'-11	2512
8g3	ABUTMENT DIAPHRAGM VERTICAL - B.F.		62	15'-3	2525	62	15'-3	2525	62	15'-3	2525	62	15-3	2525
6g4	ABUTMENT DIAPHRAGM WING EXT. VERT.		-	-	-	-	-	-	-	-	-	-	-	-
5h1	WING HORIZONTAL BACK FACE		28	6'-8	195	28	6'-8	195	28	6'-8	195	28	6'-8	195
5h2	WING HORIZONTAL BACK FACE		56	4'-11	288	56	4'-11	288	56	4'-11	288	56	4'-11	288
5h3	WING HORIZONTAL TRAFFIC FACE		28	6'-9	198	28	6'-9	198	28	6'-9	198	28	6'-9	198
5h4	WING HORIZONTAL TRAFFIC FACE		-	-	-	-	-	-	-	-	-	-	-	-
5j1	TOP OF SLAB, TRANSVERSE, AT RAIL		384	6'-3	2504	432	6'-3	2817	480	6'-3	3129	528	6'-3	3442
5k1	PAVING NOTCH, TRANSVERSE		64	4'-3	284	64	4'-3	284	64	4'-3	284	64	4'-3	284
5k2	PAVING NOTCH, TRANSVERSE		64	3'-5	229	64	3'-5	229	64	3'-5	229	64	3'-5	229
5p1	ABUTMENT HOOPS		168	10'-6	1840	168	10'-6	1840	160	10'-6	1753	160	10'-6	1753
5p2	ABUTMENT HOOPS AT ENDS		8	11'-4	95	8	11'-4	95	8	11'-4	95	8	11'-4	95
6p3	ABUTMENT BOTTOM AT PILES		32	6'-8	321	32	6'-8	321	36	6'-8	361	36	6'-8	361
5p4	ABUTMENT EXTENSION HOOPS		-	-	-	-	-	-	-	-	-	-	-	-
5s1	WING, VERTICAL		64	5'-7	373	64	5'-7	373	64	5'-7	373	64	6'-2	412
4t1	UNDER BEAMS AT ABUTMENTS		12	4'-7	37	12	4'-7	37	12	4'-7	37	12	4'-7	37
4t2	ABUTMENT DIAPHRAGM, LONGITUDINAL F.F.		36	7'-6	181	36	7'-6	181	36	7'-6	181	36	7'-6	181
	* PILE SPIRAL - NO. 2 BAR		16	38'-6	103	16	38'-6	103	18	38'-6	116	18	38'-6	116
	* SPIRAL SPACER L $\frac{7}{8}\times\frac{7}{8}\times$ 0.70		48	1'-10	62	48	1'-10	62	54	1'-10	70	54	1'-10	70
	** REINFORCING STEEL EPOXY COATED (LBS.)				65,592			71,907			78,649			85,094

BAR	LOCATION	240'-0 NO.	240'-0 LENGTH	240'-0 WEIGHT	260'-0 NO.	260'-0 LENGTH	260'-0 WEIGHT	280'-0 NO.	280'-0 LENGTH	280'-0 WEIGHT	300'-0 NO.	300'-0 LENGTH	300'-0 WEIGHT	320'-0 NO.	320'-0 LENGTH	320'-0 WEIGHT	340'-0 NO.	340'-0 LENGTH	340'-0 WEIGHT
6a1	SLAB TRANSVERSE, TOP & BOTTOM	529	42'-10	34,034	577	42'-10	37,122	625	42'-10	40,210	673	42'-10	43,298	721	42'-10	46,387	769	42'-10	49,475
6a2	SLAB TRANSVERSE, TOP-ENDS	54	VARIES	1717	54	VARIES	1717	54	VARIES	1717	54	VARIES	1717	54	VARIES	1717	54	VARIES	1717
6a3	SLAB TRANSVERSE, BOTTOM-ENDS	54	VARIES	1775	54	VARIES	1775	54	VARIES	1775	54	VARIES	1775	54	VARIES	1775	54	VARIES	1775
6b1	SLAB LONGITUDINAL TOP & BOTTOM	679	36'-9	37,480	679	39'-8	40,455	776	37'-6	43,709	776	40'-0	46,623	873	38'-0	49,828	970	36'-6	53,179
5d2	ABUTMENT DIAPHRAGM, LONGITUDINAL	16	24'-2	404	16	24'-2	404	16	24'-2	404	16	24'-2	404	16	24'-2	404	16	24'-2	404
5d5	ABUTMENT DIAPHRAGM, LONGITUDINAL - END	16	5'-0	84	16	5'-0	84	16	5'-0	84	16	5'-0	84	16	5'-0	84	16	5'-0	84
5d6	ABUTMENT DIAPHRAGM, LONGITUDINAL - B.F.	16	25'-8	429	16	25'-8	429	16	25'-8	429	16	25'-8	429	16	25'-8	429	16	25'-8	429
5d7	PAVING NOTCH, LONGITUDINAL	8	25'-7	214	8	25'-7	214	8	25'-7	214	8	25'-7	214	8	25'-7	214	8	25'-7	214
5d8	ABUT. DIAPHRAGM WING EXT. LONGIT.	-	-	-	-	-	-	-	-	-	-	-	-	-	-	-	24	10'-9	269
5d9	ABUT. DIAPHRAGM WING EXT. LONGIT.	-	-	-	-	-	-	-	-	-	-	-	-	-	-	-	24	10'-8	267
8f1	ABUTMENT FOOTING LONGITUDINAL - B.F.	36	26'-11	2588	36	26'-11	2588	36	26'-11	2588	36	26'-11	2588	36	26'-11	2588	36	26'-11	2588
8f3	ABUTMENT EXTENSION LONGITUDINAL	-	-	-	-	-	-	-	-	-	-	-	-	-	-	-	16	10'-4	442
8f4	ABUTMENT EXTENSION LONGITUDINAL	-	-	-	-	-	-	-	-	-	-	-	-	-	-	-	8	8'-10	189
8f5	ABUTMENT EXTENSION LONGITUDINAL	-	-	-	-	-	-	-	-	-	-	-	-	-	-	-	8	8'-6	182
8g1	ABUTMENT VERTICAL - B.F.	136	6'-11	2512	136	7'-1	2573	136	7'-2	2603	136	7'-2	2603	136	7'-2	2603	136	7'-6	2724
8g3	ABUTMENT DIAPHRAGM VERTICAL - B.F.	62	15'-3	2525	62	15'-3	2525	62	15'-3	2525	62	15'-3	2525	62	15'-3	2525	62	15'-3	2525
6g4	ABUTMENT DIAPHRAGM WING EXT. VERT.	-	-	-	-	-	-	-	-	-	-	-	-	-	-	-	40	6'-0	361
5h1	WING HORIZONTAL BACK FACE	28	6'-8	195	28	6'-8	195	28	6'-8	195	28	6'-8	195	28	6'-8	195	36	6'-8	251
5h2	WING HORIZONTAL BACK FACE	56	4'-11	288	56	4'-11	288	56	4'-11	288	56	4'-11	288	56	4'-11	288	12	4'-11	62
5h3	WING HORIZONTAL TRAFFIC FACE	28	6'-9	198	28	6'-9	198	28	6'-9	198	28	6'-9	198	28	6'-9	198	36	6'-9	254
5h4	WING HORIZONTAL TRAFFIC FACE	-	-	-	-	-	-	-	-	-	-	-	-	-	-	-	12	4'-11	62
5j1	TOP OF SLAB, TRANSVERSE, AT RAIL	576	6'-3	3755	624	6'-3	4068	672	6'-3	4381	720	6'-3	4694	768	6'-3	5007	816	6'-3	5320
5k1	PAVING NOTCH, TRANSVERSE	64	4'-3	284	64	4'-3	284	64	4'-3	284	64	4'-3	284	64	4'-3	284	64	4'-3	284
5k2	PAVING NOTCH, TRANSVERSE	64	3'-5	229	64	3'-5	229	64	3'-5	229	64	3'-5	229	64	3'-5	229	64	3'-5	229
5p1	ABUTMENT HOOPS	160	10'-6	1753	144	10'-6	1578	144	10'-6	1578	144	10'-6	1578	144	10'-6	1578	160	10'-6	1753
5p2	ABUTMENT HOOPS AT ENDS	8	11'-4	95	8	11'-4	95	8	11'-4	95	8	11'-4	95	8	11'-4	95	8	11'-4	95
6p3	ABUTMENT BOTTOM AT PILES	36	6'-8	361	40	6'-8	401	40	6'-8	401	40	6'-8	401	40	6'-8	401	44	6'-8	441
5p4	ABUTMENT EXTENSION HOOPS	-	-	-	-	-	-	-	-	-	-	-	-	-	-	-	24	10'-8	267
5s1	WING, VERTICAL	64	6'-2	412	64	6'-2	412	64	6'-2	412	64	6'-2	412	64	6'-2	412	64	6'-11	462
4t1	UNDER BEAMS AT ABUTMENTS	12	4'-7	37	12	4'-7	37	12	4'-7	37	12	4'-7	37	12	4'-7	37	12	4'-7	37
4t2	ABUTMENT DIAPHRAGM, LONGITUDINAL F.F.	36	7'-6	181	36	7'-6	181	36	7'-6	181	36	7'-6	181	36	7'-6	181	36	7'-6	181
	* PILE SPIRAL - NO. 2 BAR	18	38'-6	116	20	38'-6	129	20	38'-6	129	20	38'-6	129	20	38'-6	129	26	38'-6	168
	* SPIRAL SPACER L $\frac{7}{8}\times\frac{7}{8}\times$ 0.70	54	1'-10	70	60	1'-10	77	60	1'-10	77	60	1'-10	77	60	1'-10	77	78	1'-10	101
	** REINFORCING STEEL EPOXY COATED (LBS.)			91,736			98,058			104,743			111,058			117,665			126,791

* EPOXY COATING NOT REQUIRED ** BARRIER RAIL REINFORCING NOT INCLUDED

BENT BAR DETAILS

NOTE: ALL DIMENSIONS ARE OUT TO OUT.
D= PIN DIAMETER

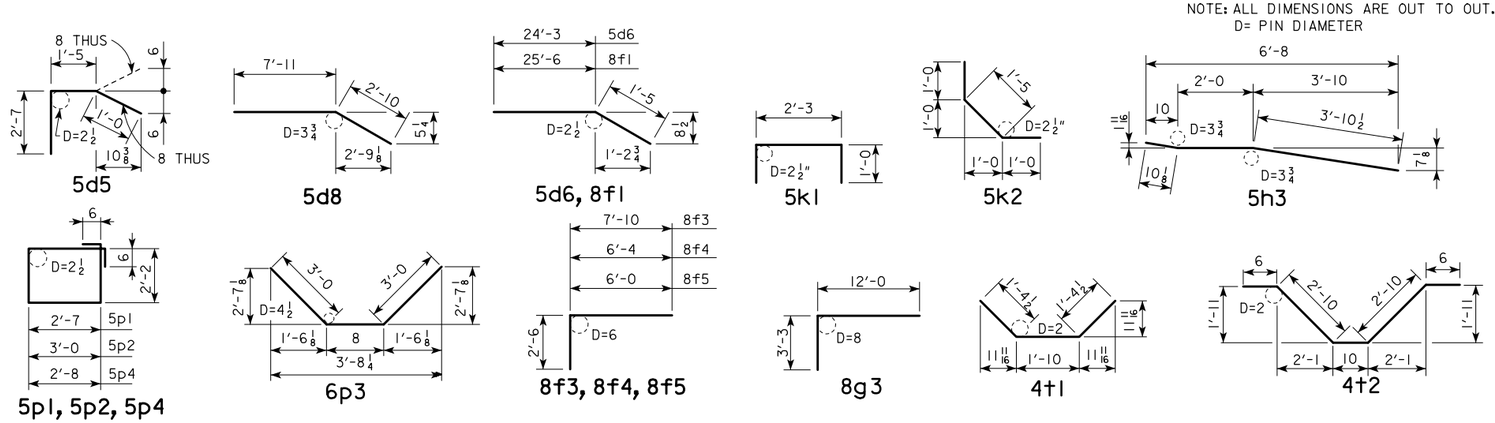

NOTE: THE REINFORCING STEEL QUANTITY IS TO BE INCLUDED ON THE SUMMARY QUANTITIES SHEET IN THE PLAN.

LATEST REVISION DATE

APPROVED BY BRIDGE ENGINEER

IOWA DOT Highway Division

STANDARD DESIGN - 40' ROADWAY, 3 SPAN BRIDGES

ROLLED STEEL BEAM BRIDGES

OCTOBER, 2014

DECK AND ABUTMENT REINFORCEMENT 30° SKEW

RS40-039-14

EPOXY COATED REINFORCING BAR LIST

ONE SUPERSTRUCTURE AND TWO ABUTMENTS

BRIDGE LENGTH

BAR	LOCATION	SHAPE	160'-0 NO.	160'-0 LENGTH	160'-0 WEIGHT	180'-0 NO.	180'-0 LENGTH	180'-0 WEIGHT	200'-0 NO.	200'-0 LENGTH	200'-0 WEIGHT	220'-0 NO.	220'-0 LENGTH	220'-0 WEIGHT
6a1	SLAB TRANSVERSE, TOP & BOTTOM		297	42'-10	19,108	345	42'-10	22,196	393	42'-10	25,284	441	42'-10	28,373
6a2	SLAB TRANSVERSE, TOP-ENDS		94	VARIES	3060	94	VARIES	3060	94	VARIES	3060	94	VARIES	3060
6a3	SLAB TRANSVERSE, BOTTOM-ENDS		94	VARIES	3118	94	VARIES	3118	94	VARIES	3118	94	VARIES	3118
6b1	SLAB LONGITUDINAL TOP & BOTTOM		485	34'-8	25,254	485	38'-8	28,168	582	36'-0	31,470	582	39'-4	34,384
5d2	ABUTMENT DIAPHRAGM, LONGITUDINAL		16	29'-6	493	16	29'-6	493	16	29'-6	493	16	29'-6	493
5d5	ABUTMENT DIAPHRAGM, LONGITUDINAL - END		16	6'-2	103	16	6'-2	103	16	6'-2	103	16	6'-2	103
5d6	ABUTMENT DIAPHRAGM, LONGITUDINAL - B.F.		16	30'-11	516	16	30'-11	516	16	30'-11	516	16	30'-11	516
5d7	PAVING NOTCH, LONGITUDINAL		8	31'-3	261	8	31'-3	261	8	31'-3	261	8	31'-3	261
5d8	ABUT. DIAPHRAGM WING EXT. LONGIT.		-	-	-	-	-	-	-	-	-	-	-	-
5d9	ABUT. DIAPHRAGM WING EXT. LONGIT.		-	-	-	-	-	-	-	-	-	-	-	-
8f1	ABUTMENT FOOTING LONGITUDINAL - B.F.		36	32'-2	3092	36	32'-2	3092	36	32'-2	3092	36	32'-2	3092
8f3	ABUTMENT EXTENSION LONGITUDINAL		-	-	-	-	-	-	-	-	-	-	-	-
8f4	ABUTMENT EXTENSION LONGITUDINAL		-	-	-	-	-	-	-	-	-	-	-	-
8f5	ABUTMENT EXTENSION LONGITUDINAL		-	-	-	-	-	-	-	-	-	-	-	-
8g1	ABUTMENT VERTICAL - B.F.		168	6'-5	2879	168	6'-5	2879	168	6'-8	2991	168	6'-11	3103
8g3	ABUTMENT DIAPHRAGM VERTICAL - B.F.		84	15'-3	3421	84	15'-3	3421	84	15'-3	3421	84	15'-3	3421
6g4	ABUTMENT DIAPHRAGM WING EXT. VERT.		-	-	-	-	-	-	-	-	-	-	-	-
5h1	WING HORIZONTAL BACK FACE		28	6'-8	195	28	6'-8	195	28	6'-8	195	28	6'-8	195
5h2	WING HORIZONTAL BACK FACE		56	4'-11	288	56	4'-11	288	56	4'-11	288	56	4'-11	288
5h3	WING HORIZONTAL TRAFFIC FACE		28	6'-9	198	28	6'-9	198	28	6'-9	198	28	6'-9	198
5h4	WING HORIZONTAL TRAFFIC FACE		-	-	-	-	-	-	-	-	-	-	-	-
5j1	TOP OF SLAB, TRANSVERSE, AT RAIL		380	6'-3	2478	428	6'-3	2791	476	6'-3	3103	524	6'-3	3416
5k1	PAVING NOTCH, TRANSVERSE		86	4'-3	382	86	4'-3	382	86	4'-3	382	86	4'-3	382
5k2	PAVING NOTCH, TRANSVERSE		86	3'-5	307	86	3'-5	307	86	3'-5	307	86	3'-5	307
5p1	ABUTMENT HOOPS		192	10'-6	2103	192	10'-6	2103	192	10'-6	2103	192	10'-6	2103
5p2	ABUTMENT HOOPS AT ENDS		8	12'-8	106	8	12'-8	106	8	12'-8	106	8	12'-8	106
6p3	ABUTMENT BOTTOM AT PILES		36	6'-8	361	36	6'-8	361	36	6'-8	361	36	6'-8	361
5p4	ABUTMENT EXTENSION HOOPS		-	-	-	-	-	-	-	-	-	-	-	-
5s1	WING, VERTICAL		64	5'-7	373	64	5'-7	373	64	5'-7	373	64	6'-2	412
4t1	UNDER BEAMS AT ABUTMENTS		12	4'-7	37	12	4'-7	37	12	4'-7	37	12	4'-7	37
4t2	ABUTMENT DIAPHRAGM, LONGITUDINAL F.F.		36	7'-6	181	36	7'-6	181	36	7'-6	181	36	7'-6	181
	* PILE SPIRAL - NO. 2 BAR		18	38'-6	116	18	38'-6	116	18	38'-6	116	18	38'-6	116
	* SPIRAL SPACER $L\frac{7}{8}\times\frac{7}{8}\times$ 0.70		54	1'-10	70	54	1'-10	70	54	1'-10	70	54	1'-10	70
	** REINFORCING STEEL EPOXY COATED (LBS.)				68,500			74,815			81,629			88,096

BAR	240'-0 NO.	240'-0 LENGTH	240'-0 WEIGHT	260'-0 NO.	260'-0 LENGTH	260'-0 WEIGHT	280'-0 NO.	280'-0 LENGTH	280'-0 WEIGHT	300'-0 NO.	300'-0 LENGTH	300'-0 WEIGHT	320'-0 NO.	320'-0 LENGTH	320'-0 WEIGHT	340'-0 NO.	340'-0 LENGTH	340'-0 WEIGHT
6a1	489	42'-10	31,461	537	42'-10	34,549	585	42'-10	37,637	633	42'-10	40,725	681	42'-10	43,813	729	42'-10	46,901
6a2	94	VARIES	3060	94	VARIES	3060	94	VARIES	3060	94	VARIES	3060	94	VARIES	3060	94	VARIES	3060
6a3	94	VARIES	3118	94	VARIES	3118	94	VARIES	3118	94	VARIES	3118	94	VARIES	3118	94	VARIES	3118
6b1	679	36'-11	37,650	679	39'-9	40,540	776	37'-7	43,806	873	35'-11	47,096	873	38'-1	49,937	970	36'-6	53,179
5d2	16	29'-6	493	16	29'-6	493	16	29'-6	493	16	29'-6	493	16	29'-6	493	16	29'-6	493
5d5	16	6'-2	103	16	6'-2	103	16	6'-2	103	16	6'-2	103	16	6'-2	103	16	6'-2	103
5d6	16	30'-11	516	16	30'-11	516	16	30'-11	516	16	30'-11	516	16	30'-11	516	16	30'-11	516
5d7	8	31'-3	261	8	31'-3	261	8	31'-3	261	8	31'-3	261	8	31'-3	261	8	31'-3	261
5d8	-	-	-	-	-	-	-	-	-	-	-	-	-	-	-	24	11'-4	284
5d9	-	-	-	-	-	-	-	-	-	-	-	-	-	-	-	24	11'-3	282
8f1	36	32'-2	3092	36	32'-2	3092	36	32'-2	3092	36	32'-2	3092	36	32'-2	3092	36	32'-2	3092
8f3	-	-	-	-	-	-	-	-	-	-	-	-	-	-	-	16	10'-8	456
8f4	-	-	-	-	-	-	-	-	-	-	-	-	-	-	-	8	9'-2	196
8f5	-	-	-	-	-	-	-	-	-	-	-	-	-	-	-	8	8'-2	175
8g1	168	6'-11	3103	168	7'-1	3178	168	7'-2	3215	168	7'-2	3215	168	7'-2	3215	168	7'-6	3365
8g3	84	15'-3	3421	84	15'-3	3421	84	15'-3	3421	84	15'-3	3421	84	15'-3	3421	84	15'-3	3421
6g4	-	-	-	-	-	-	-	-	-	-	-	-	-	-	-	32	6'-0	289
5h1	28	6'-8	195	28	6'-8	195	28	6'-8	195	28	6'-8	195	28	6'-8	195	36	6'-8	251
5h2	56	4'-11	288	56	4'-11	288	56	4'-11	288	56	4'-11	288	56	4'-11	288	12	4'-11	62
5h3	28	6'-9	198	28	6'-9	198	28	6'-9	198	28	6'-9	198	28	6'-9	198	36	6'-9	254
5h4	-	-	-	-	-	-	-	-	-	-	-	-	-	-	-	12	4'-11	62
5j1	572	6'-3	3729	620	6'-3	4042	668	6'-3	4355	716	6'-3	4668	764	6'-3	4981	812	6'-3	5294
5k1	86	4'-3	382	86	4'-3	382	86	4'-3	382	86	4'-3	382	86	4'-3	382	86	4'-3	382
5k2	86	3'-5	307	86	3'-5	307	86	3'-5	307	86	3'-5	307	86	3'-5	307	86	3'-5	307
5p1	216	10'-6	2366	216	10'-6	2366	216	10'-6	2366	216	10'-6	2366	200	10'-6	2191	200	10'-6	2191
5p2	8	12'-8	106	8	12'-8	106	8	12'-8	106	8	12'-8	106	8	12'-8	106	8	12'-8	106
6p3	40	6'-8	401	40	6'-8	401	40	6'-8	401	40	6'-8	401	44	6'-8	441	44	6'-8	441
5p4	-	-	-	-	-	-	-	-	-	-	-	-	-	-	-	24	10'-8	267
5s1	64	6'-2	412	64	6'-2	412	64	6'-2	412	64	6'-2	412	64	6'-2	412	64	6'-11	462
4t1	12	4'-7	37	12	4'-7	37	12	4'-7	37	12	4'-7	37	12	4'-7	37	12	4'-7	37
4t2	36	7'-6	181	36	7'-6	181	36	7'-6	181	36	7'-6	181	36	7'-6	181	36	7'-6	181
* PILE SPIRAL - NO. 2 BAR	20	38'-6	129	20	38'-6	129	20	38'-6	129	20	38'-6	129	22	38'-6	142	26	38'-6	168
* SPIRAL SPACER $L\frac{7}{8}\times\frac{7}{8}\times$ 0.70	60	1'-10	77	60	1'-10	77	60	1'-10	77	60	1'-10	77	66	1'-10	85	78	1'-10	101
** REINFORCING STEEL EPOXY COATED (LBS.)			95,086			101,452			108,156			114,847			120,975			129,757

* EPOXY COATING NOT REQUIRED ** BARRIER RAIL REINFORCING NOT INCLUDED

NOTE: THE REINFORCING STEEL QUANTITY IS TO BE INCLUDED ON THE SUMMARY QUANTITIES SHEET IN THE PLAN.

BENT BAR DETAILS

NOTE: ALL DIMENSIONS ARE OUT TO OUT.
D= PIN DIAMETER

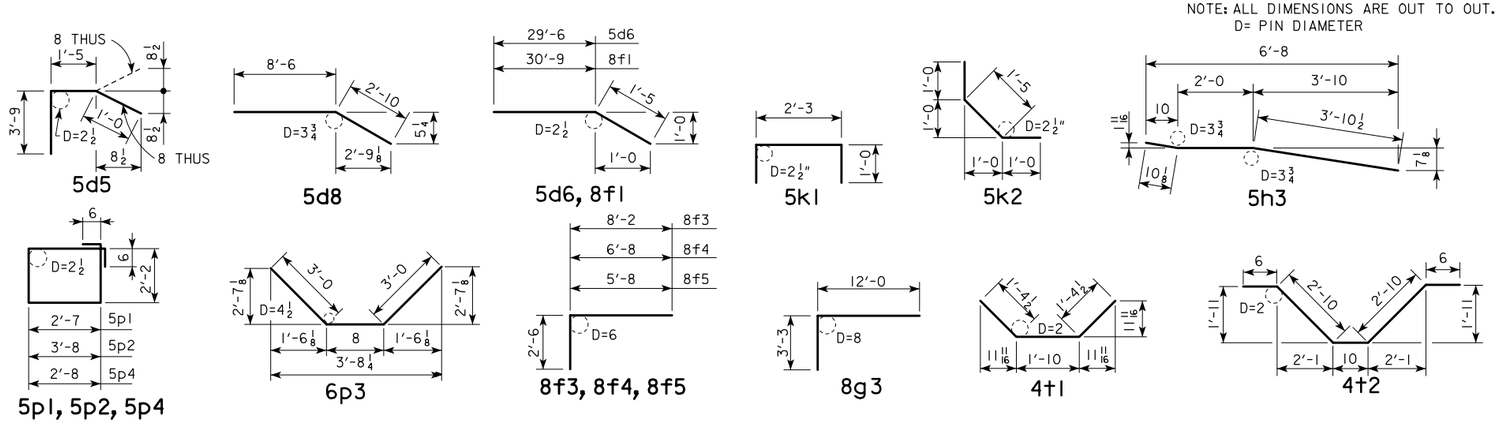

LATEST REVISION DATE

APPROVED BY BRIDGE ENGINEER

IOWA DOT Highway Division

STANDARD DESIGN - 40' ROADWAY, 3 SPAN BRIDGES

ROLLED STEEL BEAM BRIDGES

OCTOBER, 2014

DECK AND ABUTMENT REINFORCEMENT 45° SKEW

RS40-040-14

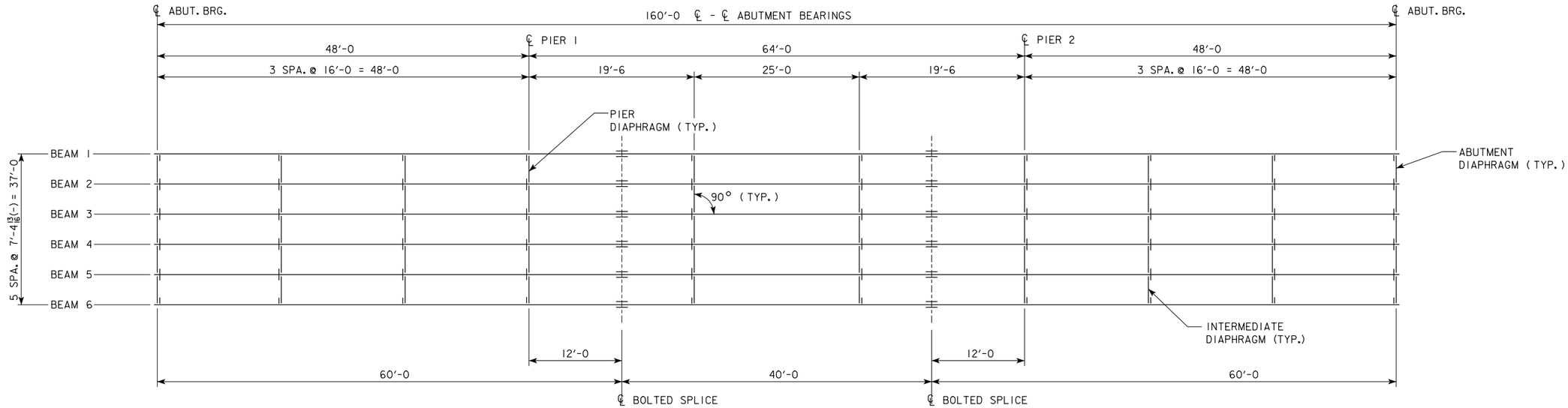

0° SKEW FRAMING PLAN

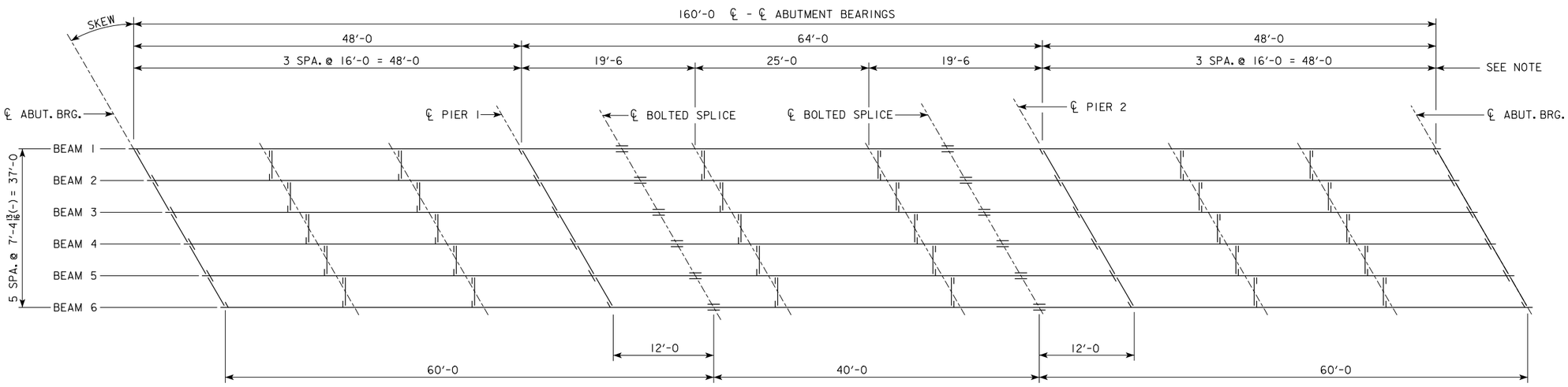

SKEWED FRAMING PLAN

(R.A. SHOWN, L.A. SIMILAR)

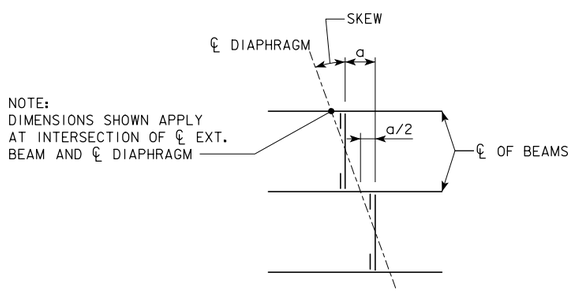

NOTE:
DIMENSIONS SHOWN APPLY AT INTERSECTION OF ℄ EXT. BEAM AND ℄ DIAPHRAGM

SKEW	a (FT.-IN.)
10°	1'-3 11/16
20°	2'-8 5/16
30°	4'-3 1/4

LATEST REVISION DATE

APPROVED BY BRIDGE ENGINEER

IOWA DOT Highway Division

STANDARD DESIGN - 40' ROADWAY, 3 SPAN BRIDGES

ROLLED STEEL BEAM BRIDGES

OCTOBER, 2014

FRAMING PLAN
160'-0 BRIDGE

RS40-041-14

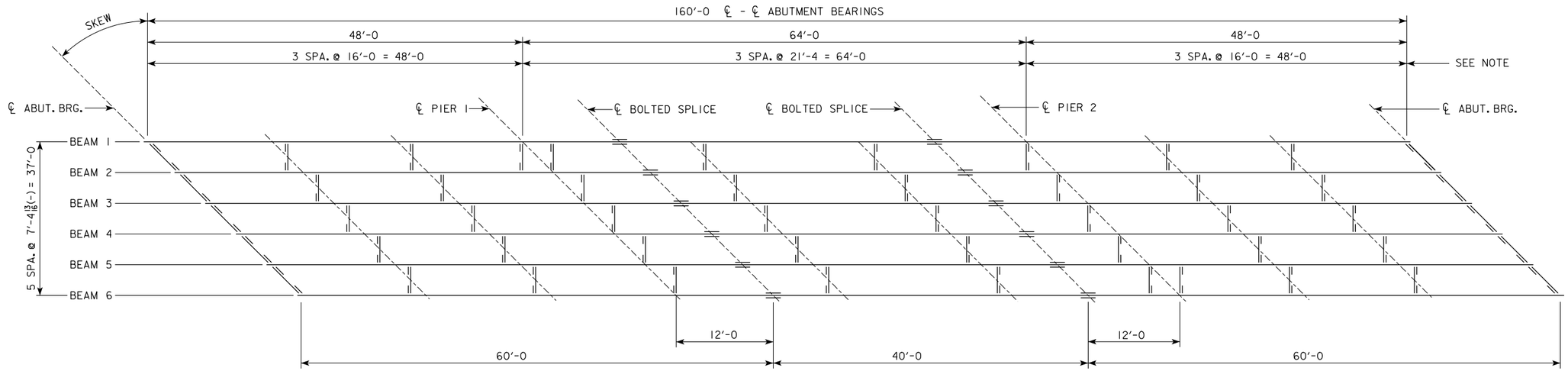

45° SKEWED FRAMING PLAN

(R.A. SHOWN, L.A. SIMILAR)

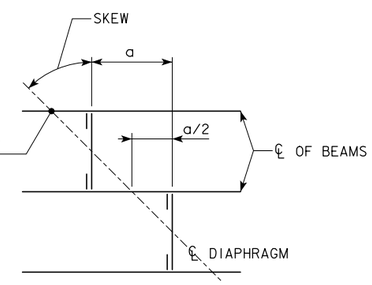

NOTE:
DIMENSIONS SHOWN APPLY AT INTERSECTION OF ℄ EXT. BEAM AND ℄ DIAPHRAGM

SKEW	a (FT.-IN.)
45°	7'-4 13/16

LATEST REVISION DATE

APPROVED BY BRIDGE ENGINEER

IOWA DOT Highway Division

STANDARD DESIGN - 40' ROADWAY, 3 SPAN BRIDGES

ROLLED STEEL BEAM BRIDGES

OCTOBER, 2014

FRAMING PLAN
160'-0 BRIDGE

RS40-042-14

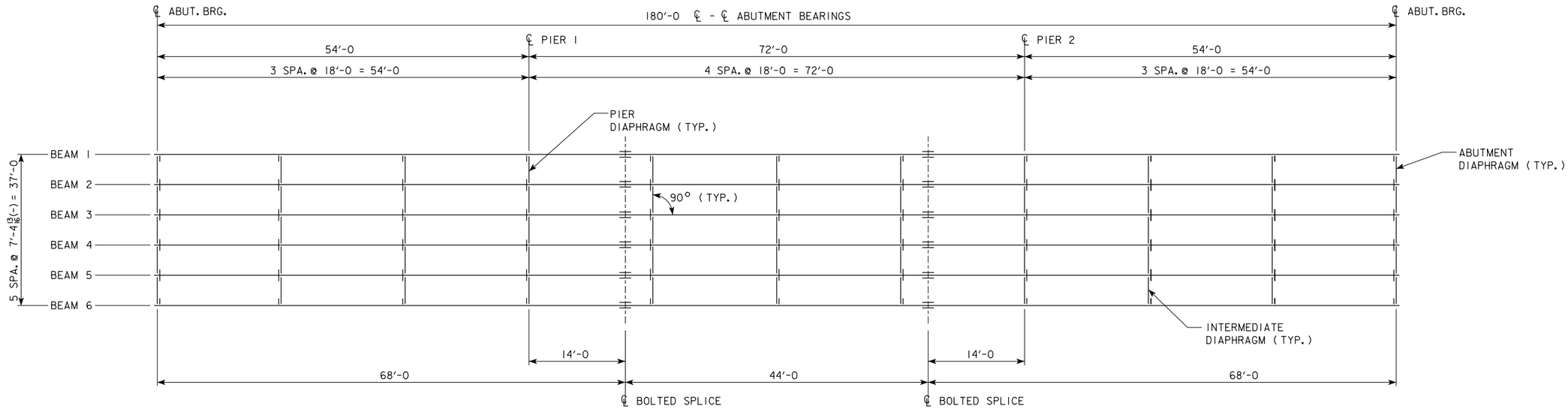

0° SKEW FRAMING PLAN

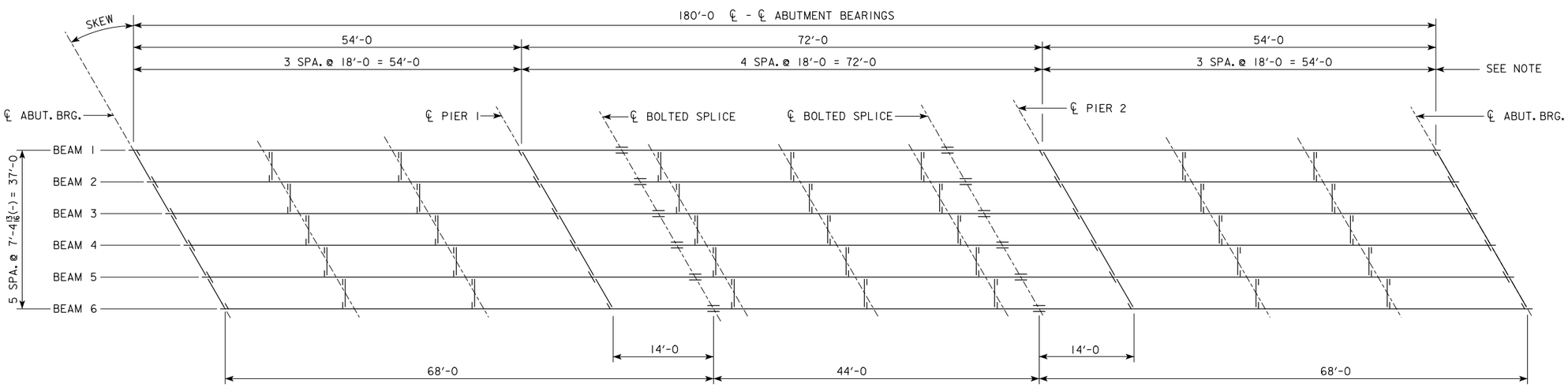

SKEWED FRAMING PLAN

(R.A. SHOWN, L.A. SIMILAR)

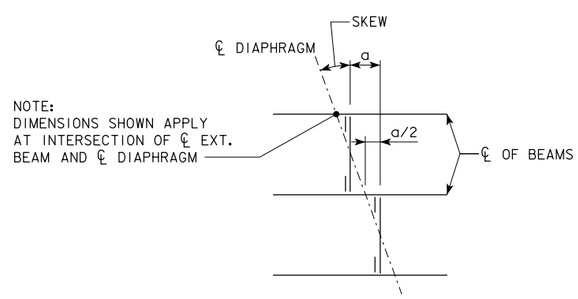

NOTE:
DIMENSIONS SHOWN APPLY AT INTERSECTION OF ℄ EXT. BEAM AND ℄ DIAPHRAGM

SKEW	a (FT.-IN.)
10°	1'-3 11/16
20°	2'-8 5/16
30°	4'-3 1/4

LATEST REVISION DATE

APPROVED BY BRIDGE ENGINEER

IOWA DOT Highway Division

STANDARD DESIGN - 40' ROADWAY, 3 SPAN BRIDGES

ROLLED STEEL BEAM BRIDGES

OCTOBER, 2014

FRAMING PLAN
180'-0 BRIDGE

RS40-043-14

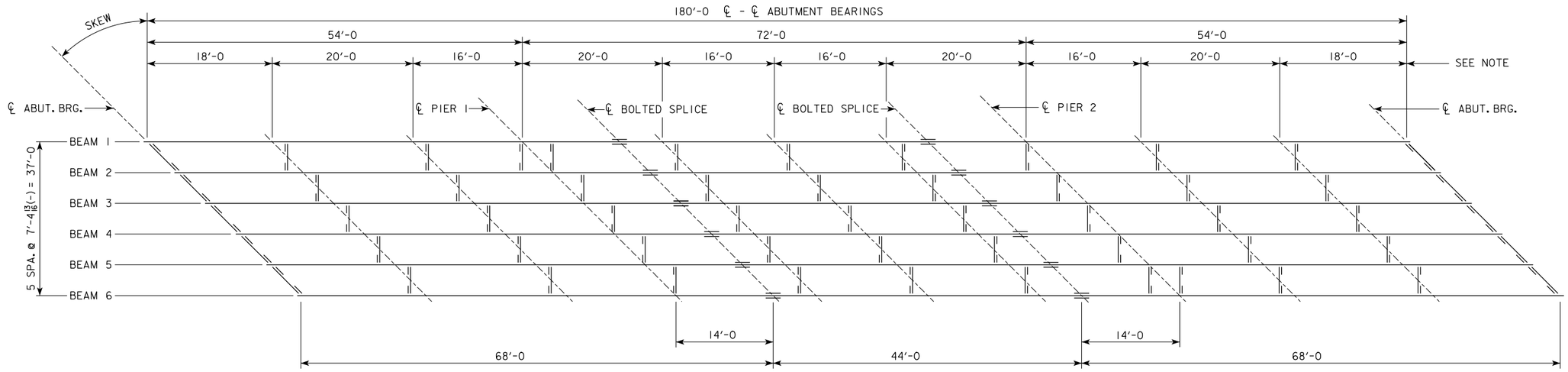

45° SKEWED FRAMING PLAN

(R.A. SHOWN, L.A. SIMILAR)

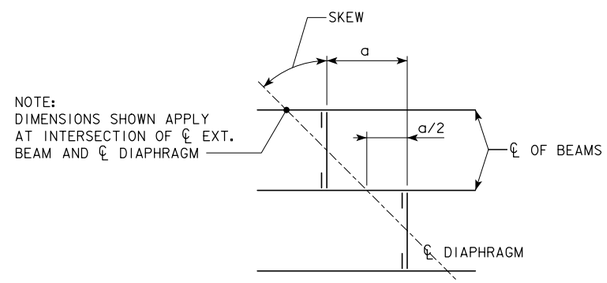

NOTE:
DIMENSIONS SHOWN APPLY AT INTERSECTION OF ℄ EXT. BEAM AND ℄ DIAPHRAGM

SKEW	a (FT.-IN.)
45°	7'-4 13/16

LATEST REVISION DATE

APPROVED BY BRIDGE ENGINEER

IOWA DOT Highway Division

STANDARD DESIGN - 40' ROADWAY, 3 SPAN BRIDGES

ROLLED STEEL BEAM BRIDGES

OCTOBER, 2014

FRAMING PLAN
180'-0 BRIDGE

RS40-044-14

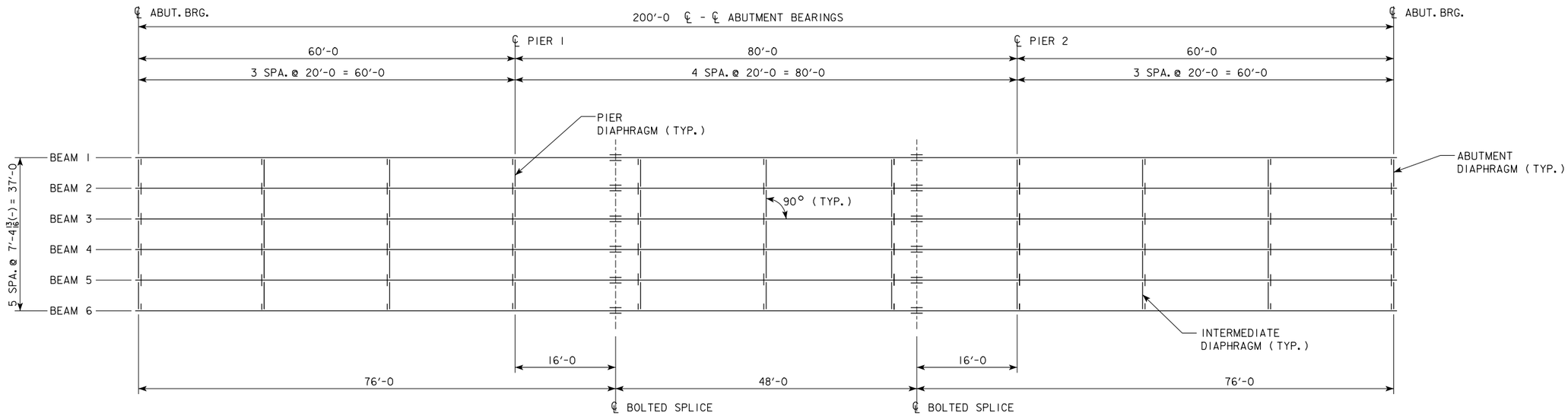

0° SKEW FRAMING PLAN

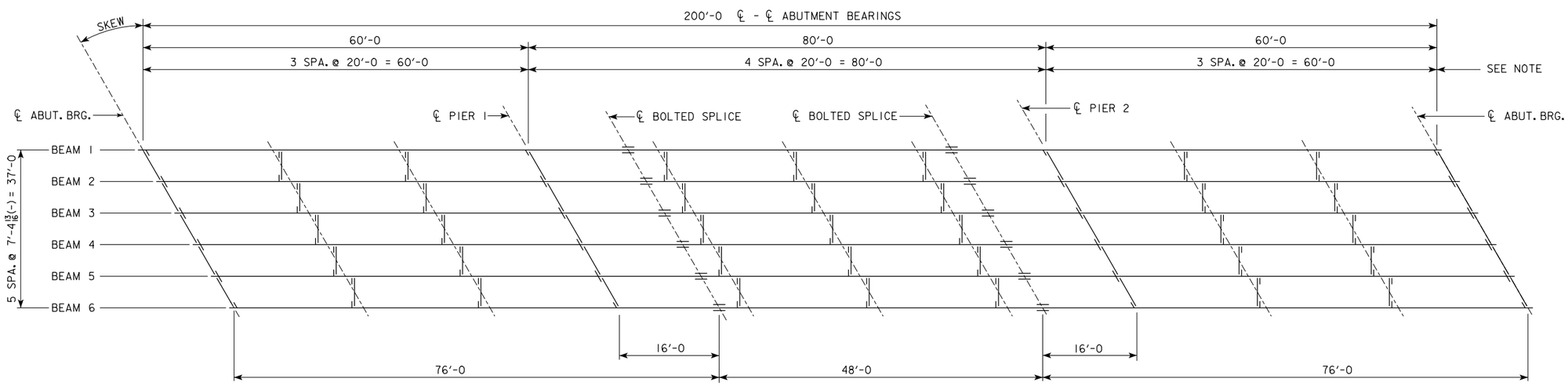

SKEWED FRAMING PLAN

(R.A. SHOWN, L.A. SIMILAR)

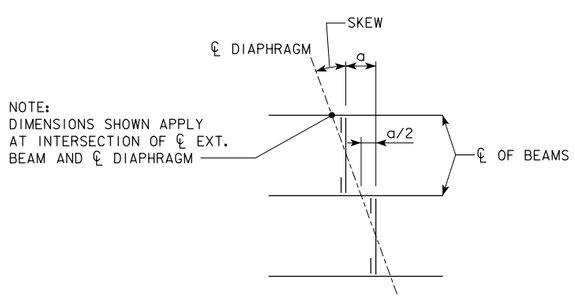

NOTE:
DIMENSIONS SHOWN APPLY AT INTERSECTION OF ℄ EXT. BEAM AND ℄ DIAPHRAGM

SKEW	a (FT.-IN.)
10°	1'-3 11/16
20°	2'-8 5/16
30°	4'-3 1/4

LATEST REVISION DATE

APPROVED BY BRIDGE ENGINEER

IOWADOT Highway Division

STANDARD DESIGN - 40' ROADWAY, 3 SPAN BRIDGES

ROLLED STEEL BEAM BRIDGES

OCTOBER, 2014

FRAMING PLAN
200'-0 BRIDGE

RS40-045-14

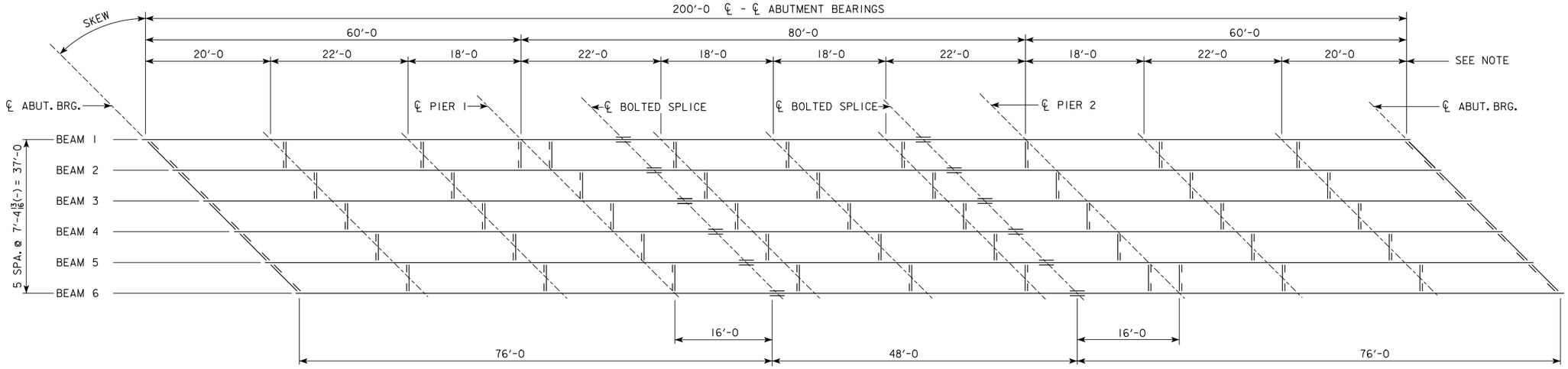

45° SKEWED FRAMING PLAN

(R.A. SHOWN, L.A. SIMILAR)

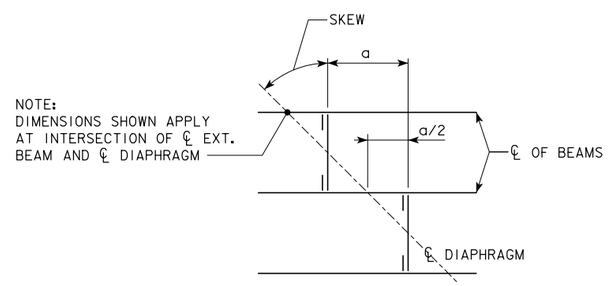

SKEW	a (FT.-IN.)
45°	7'-4 13/16

LATEST REVISION DATE

APPROVED BY BRIDGE ENGINEER

IOWA DOT Highway Division

STANDARD DESIGN - 40' ROADWAY, 3 SPAN BRIDGES

ROLLED STEEL BEAM BRIDGES

OCTOBER, 2014

FRAMING PLAN
200'-0 BRIDGE

RS40-046-14

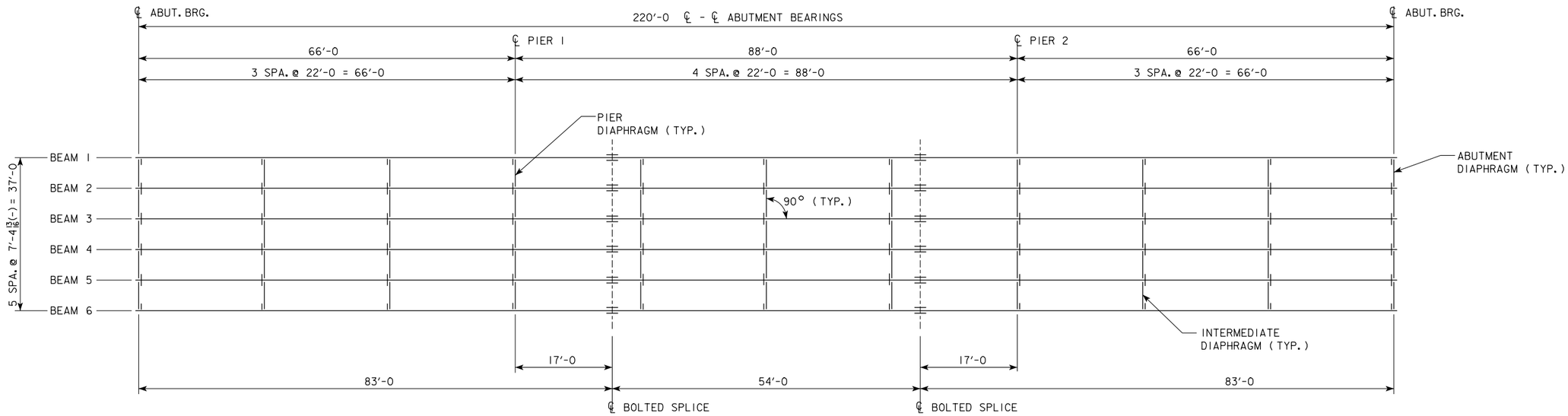

0° SKEW FRAMING PLAN

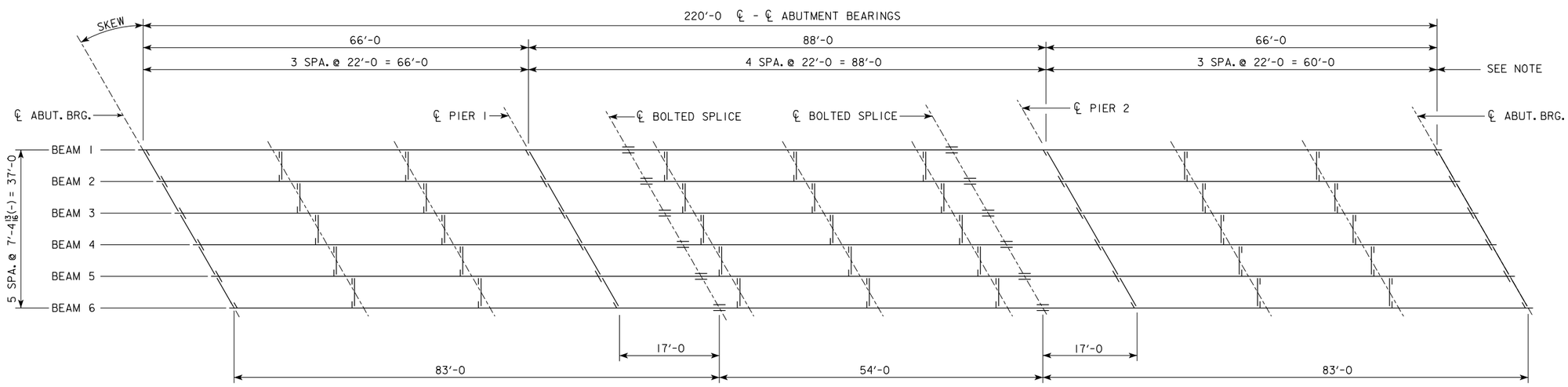

SKEWED FRAMING PLAN

(R.A. SHOWN, L.A. SIMILAR)

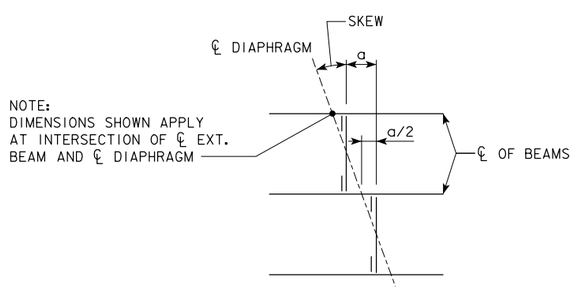

NOTE:
DIMENSIONS SHOWN APPLY AT INTERSECTION OF ℄ EXT. BEAM AND ℄ DIAPHRAGM

SKEW	a (FT.-IN.)
10°	1'-3 11/16
20°	2'-8 5/16
30°	4'-3 1/4

LATEST REVISION DATE

APPROVED BY BRIDGE ENGINEER

IOWA DOT Highway Division

STANDARD DESIGN - 40' ROADWAY, 3 SPAN BRIDGES

ROLLED STEEL BEAM BRIDGES

OCTOBER, 2014

FRAMING PLAN
220'-0 BRIDGE

RS40-047-14

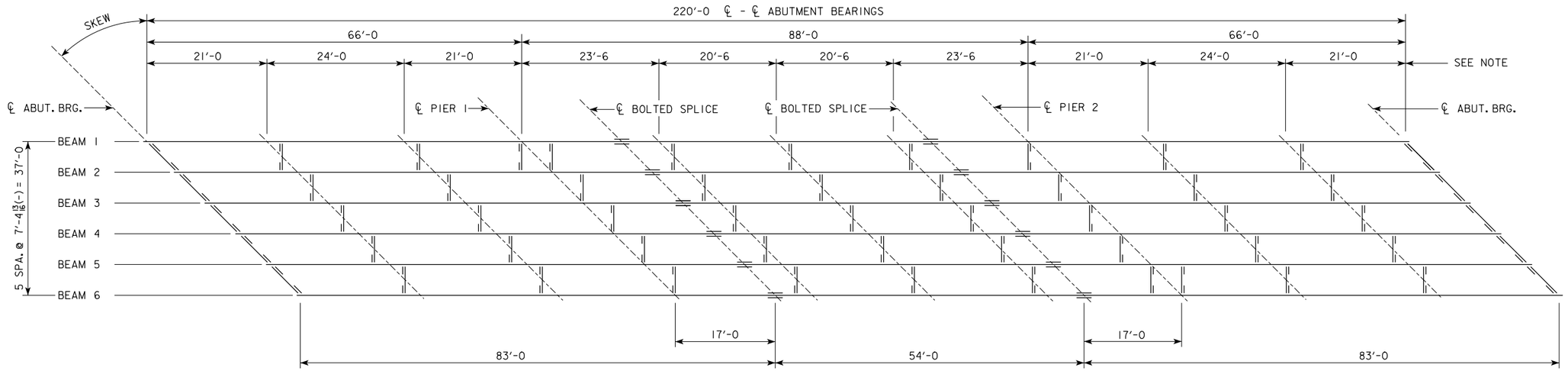

45° SKEWED FRAMING PLAN

(R.A. SHOWN, L.A. SIMILAR)

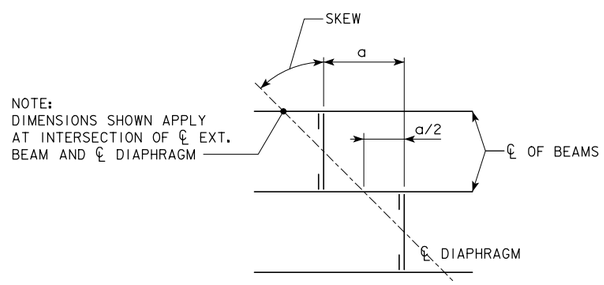

NOTE:
DIMENSIONS SHOWN APPLY AT INTERSECTION OF ℄ EXT. BEAM AND ℄ DIAPHRAGM

SKEW	a (FT.-IN.)
45°	7'-4 13/16

LATEST REVISION DATE

APPROVED BY BRIDGE ENGINEER

IOWA DOT Highway Division

STANDARD DESIGN - 40' ROADWAY, 3 SPAN BRIDGES

ROLLED STEEL BEAM BRIDGES

OCTOBER, 2014

FRAMING PLAN
220'-0 BRIDGE

RS40-048-14

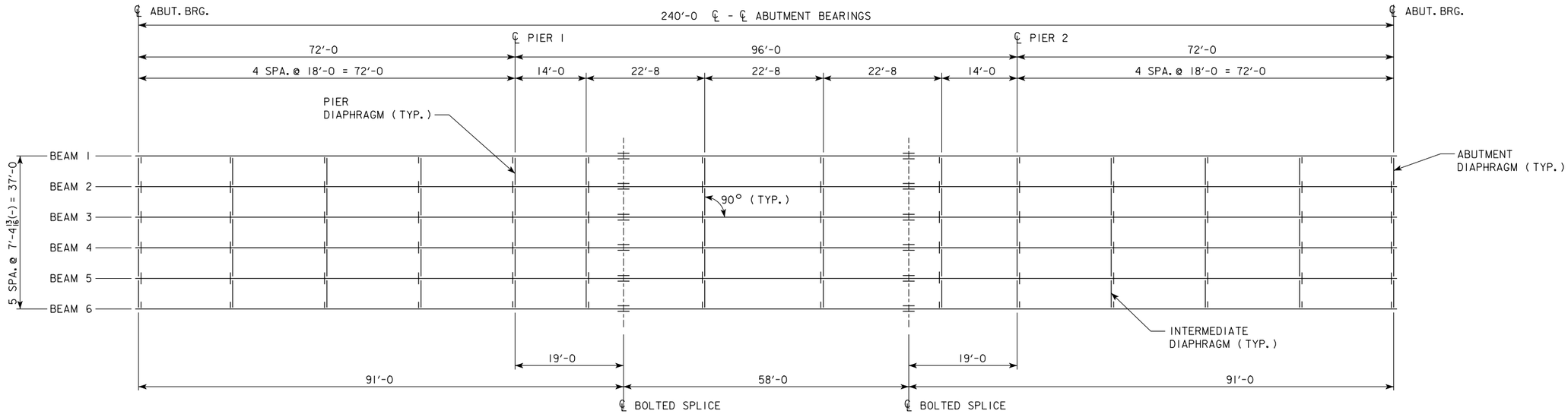

0° SKEW FRAMING PLAN

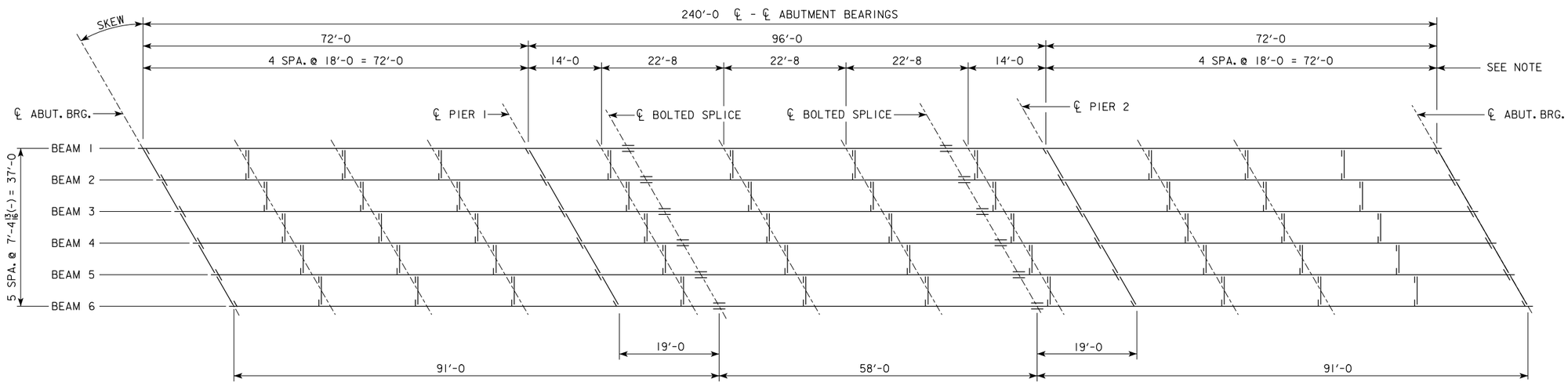

SKEWED FRAMING PLAN

(R.A. SHOWN, L.A. SIMILAR)

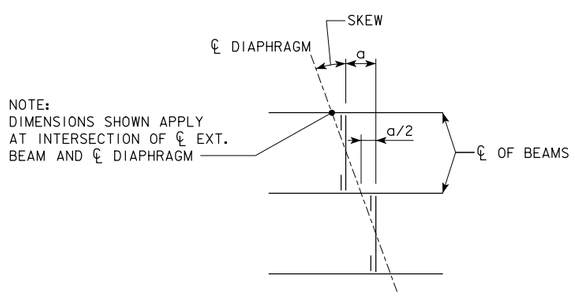

NOTE:
DIMENSIONS SHOWN APPLY AT INTERSECTION OF ℄ EXT. BEAM AND ℄ DIAPHRAGM

SKEW	a (FT.-IN.)
10°	1'-3 11/16
20°	2'-8 5/16
30°	4'-3 1/4

LATEST REVISION DATE

APPROVED BY BRIDGE ENGINEER

IOWA DOT Highway Division

STANDARD DESIGN - 40' ROADWAY, 3 SPAN BRIDGES

ROLLED STEEL BEAM BRIDGES

OCTOBER, 2014

FRAMING PLAN
240'-0 BRIDGE

RS40-049-14

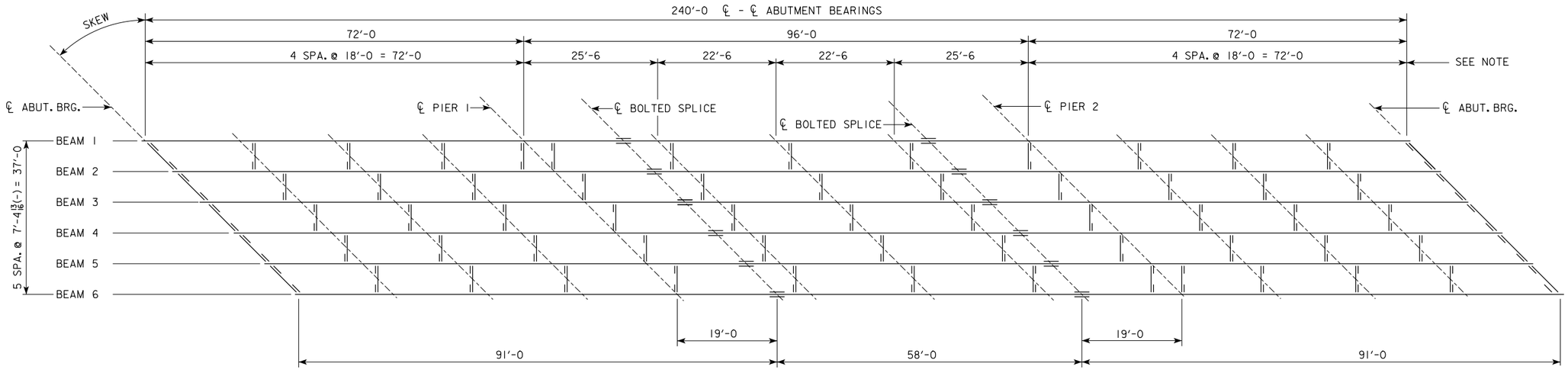

45° SKEWED FRAMING PLAN

(R.A. SHOWN, L.A. SIMILAR)

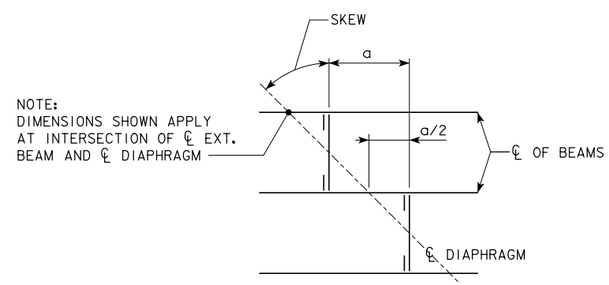

NOTE:
DIMENSIONS SHOWN APPLY AT INTERSECTION OF ℄ EXT. BEAM AND ℄ DIAPHRAGM

SKEW	a (FT.-IN.)
45°	7'-4 13/16

LATEST REVISION DATE

APPROVED BY BRIDGE ENGINEER

IOWADOT Highway Division

STANDARD DESIGN - 40' ROADWAY, 3 SPAN BRIDGES

ROLLED STEEL BEAM BRIDGES

OCTOBER, 2014

FRAMING PLAN
240'-0 BRIDGE

RS40-050-14

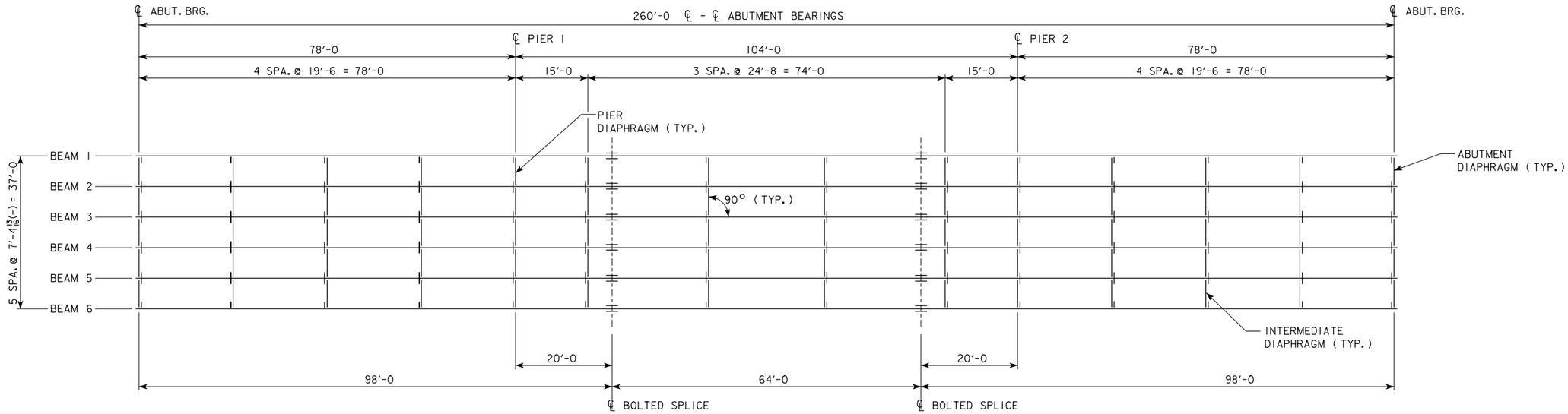

0° SKEW FRAMING PLAN

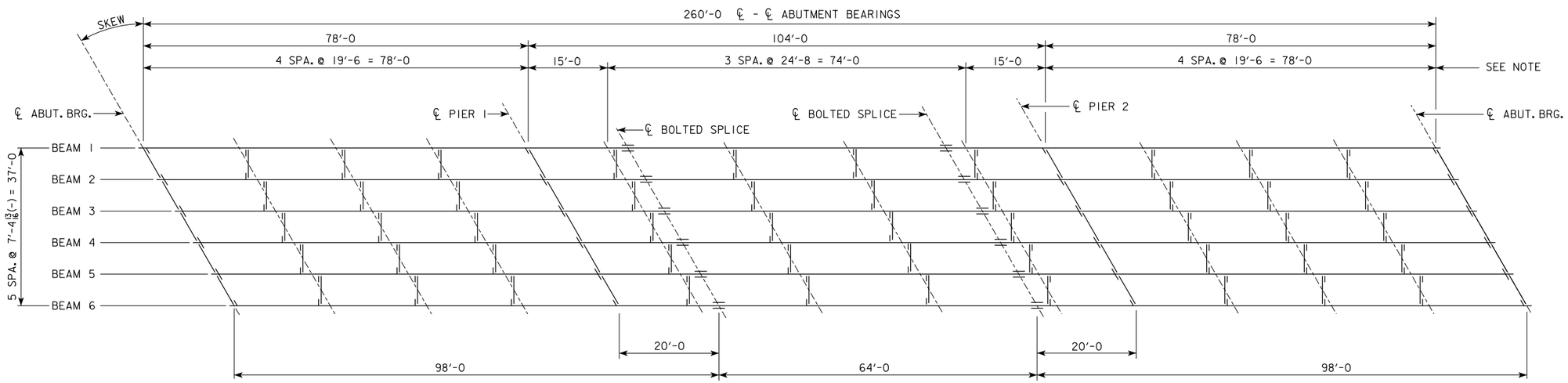

SKEWED FRAMING PLAN

(R.A. SHOWN, L.A. SIMILAR)

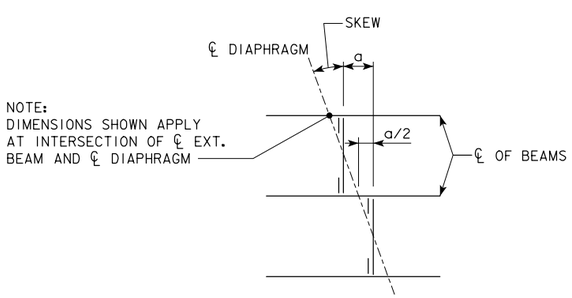

NOTE:
DIMENSIONS SHOWN APPLY AT INTERSECTION OF ℄ EXT. BEAM AND ℄ DIAPHRAGM

SKEW	a (FT.-IN.)
10°	1'-3 11/16
20°	2'-8 5/16
30°	4'-3 1/4

LATEST REVISION DATE

APPROVED BY BRIDGE ENGINEER

IOWA DOT Highway Division

STANDARD DESIGN - 40' ROADWAY, 3 SPAN BRIDGES

ROLLED STEEL BEAM BRIDGES

OCTOBER, 2014

FRAMING PLAN
260'-0 BRIDGE

RS40-051-14

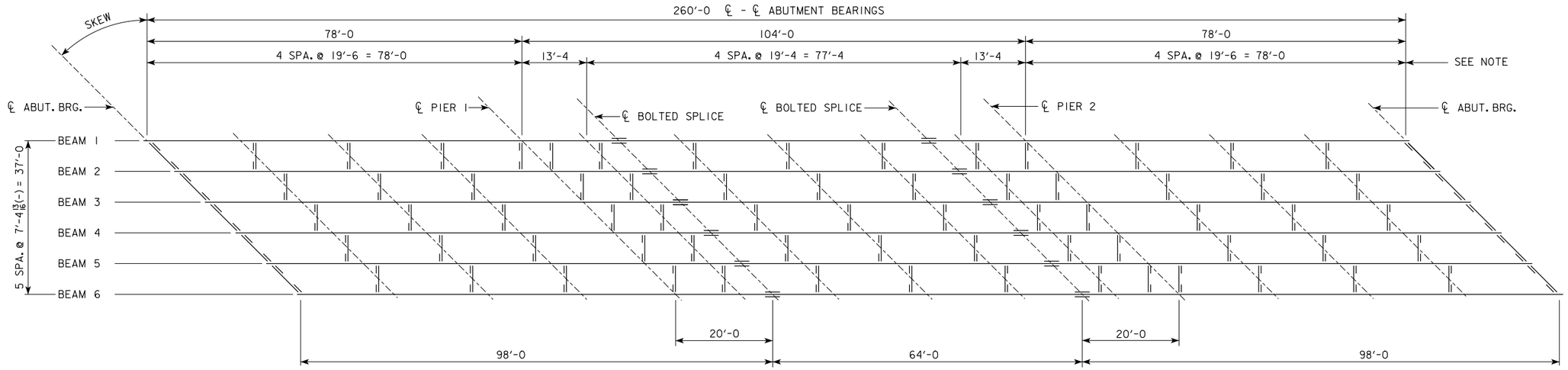

45° SKEWED FRAMING PLAN

(R.A. SHOWN, L.A. SIMILAR)

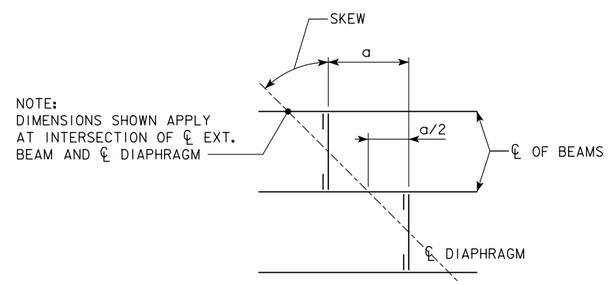

NOTE:
DIMENSIONS SHOWN APPLY AT INTERSECTION OF ℄ EXT. BEAM AND ℄ DIAPHRAGM

SKEW	a (FT.-IN.)
45°	7'-4 13/16

LATEST REVISION DATE

APPROVED BY BRIDGE ENGINEER

IOWA DOT Highway Division

STANDARD DESIGN - 40' ROADWAY, 3 SPAN BRIDGES

ROLLED STEEL BEAM BRIDGES

OCTOBER, 2014

FRAMING PLAN
260'-0 BRIDGE

RS40-052-14

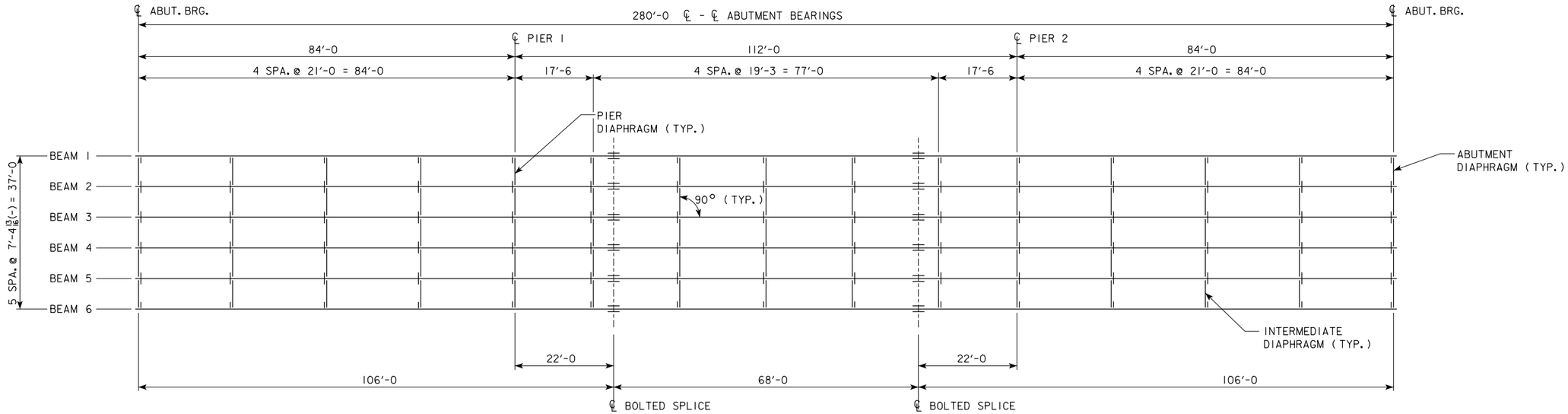

0° SKEW FRAMING PLAN

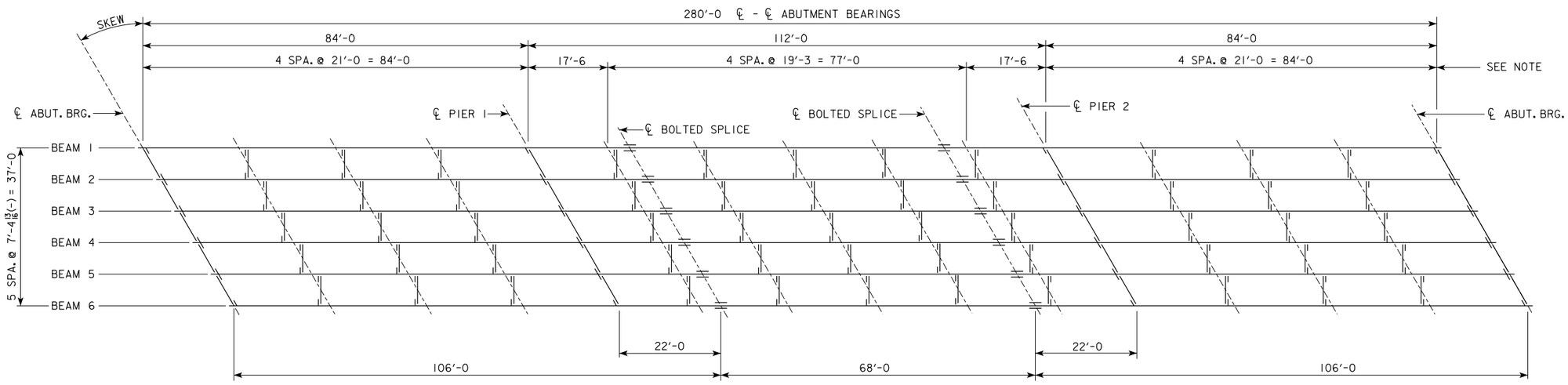

SKEWED FRAMING PLAN

(R.A. SHOWN, L.A. SIMILAR)

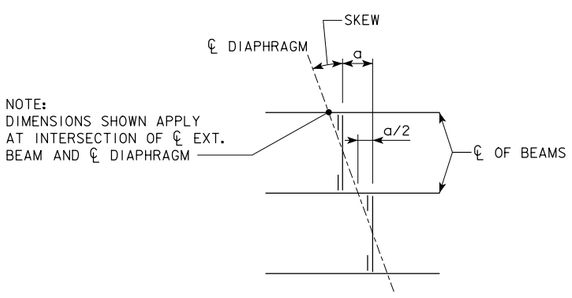

NOTE:
DIMENSIONS SHOWN APPLY AT INTERSECTION OF ℄ EXT. BEAM AND ℄ DIAPHRAGM

SKEW	a (FT.-IN.)
10°	1'-3 11/16
20°	2'-8 5/16
30°	4'-3 1/4

LATEST REVISION DATE

APPROVED BY BRIDGE ENGINEER

IOWA DOT Highway Division

STANDARD DESIGN - 40' ROADWAY, 3 SPAN BRIDGES

ROLLED STEEL BEAM BRIDGES

OCTOBER, 2014

FRAMING PLAN
280'-0 BRIDGE

RS40-053-14

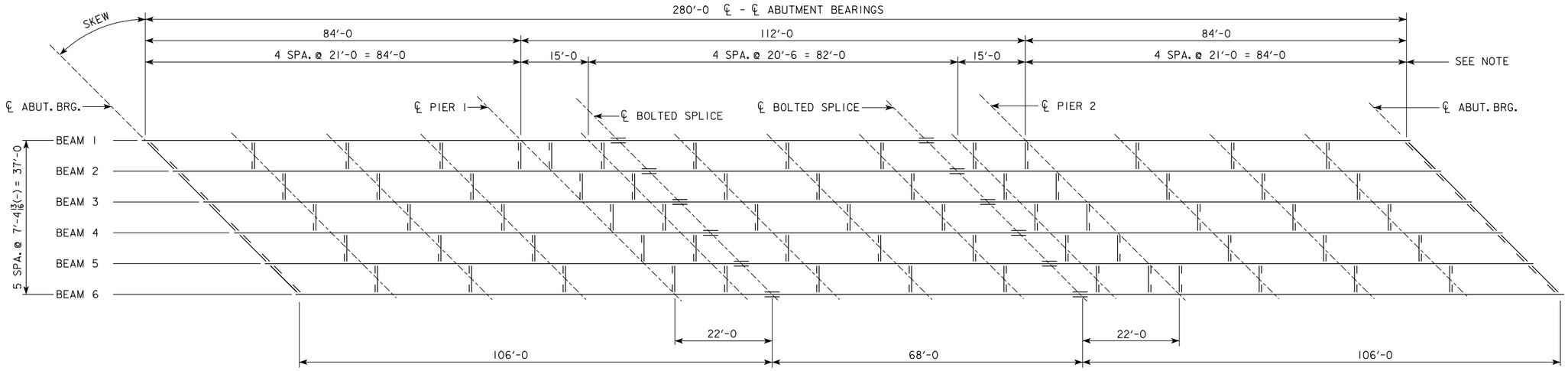

45° SKEWED FRAMING PLAN

(R.A. SHOWN, L.A. SIMILAR)

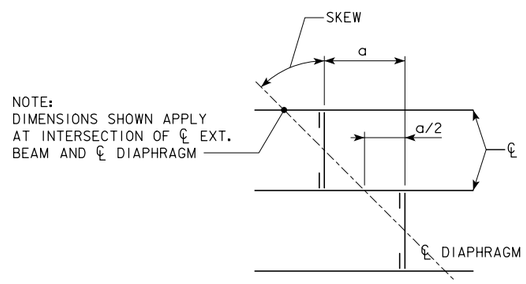

NOTE:
DIMENSIONS SHOWN APPLY AT INTERSECTION OF ℄ EXT. BEAM AND ℄ DIAPHRAGM

SKEW	a (FT.-IN.)
45°	7'-4 13/16

LATEST REVISION DATE

APPROVED BY BRIDGE ENGINEER

IOWA DOT Highway Division

STANDARD DESIGN - 40' ROADWAY, 3 SPAN BRIDGES

ROLLED STEEL BEAM BRIDGES

OCTOBER, 2014

FRAMING PLAN
280'-0 BRIDGE

RS40-054-14

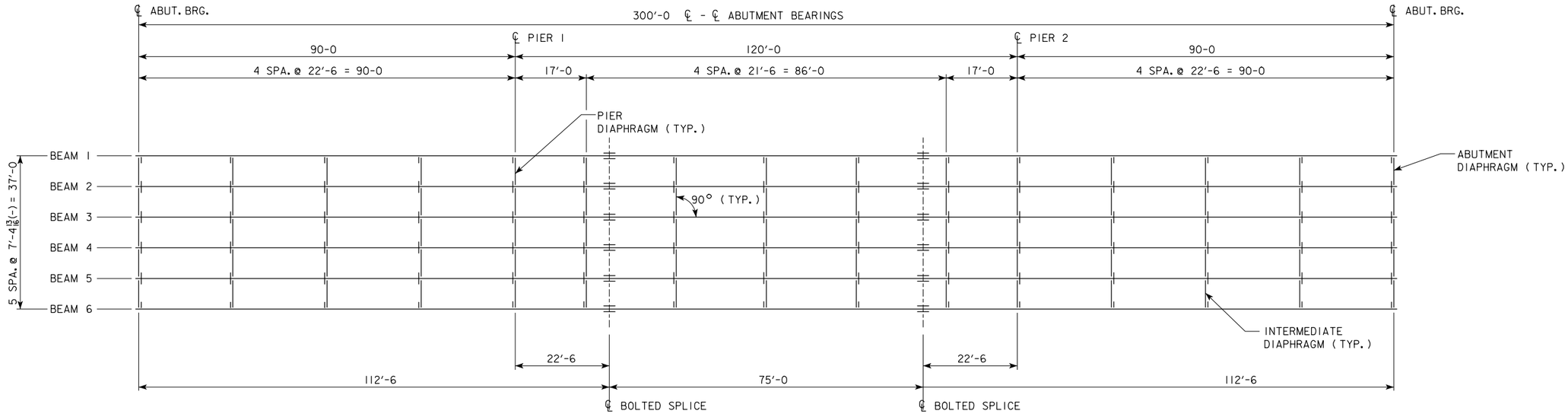

0° SKEW FRAMING PLAN

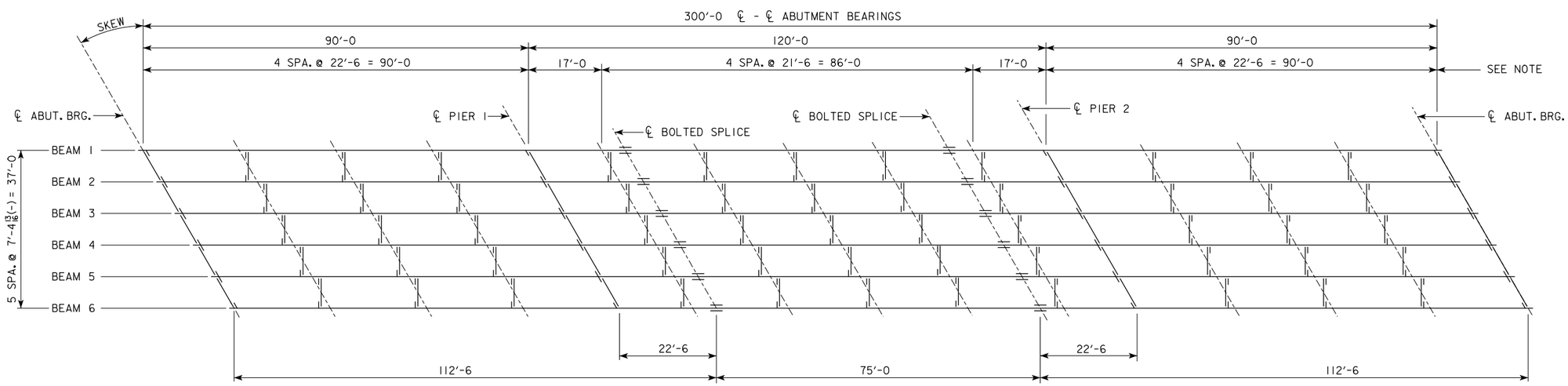

SKEWED FRAMING PLAN

(R.A. SHOWN, L.A. SIMILAR)

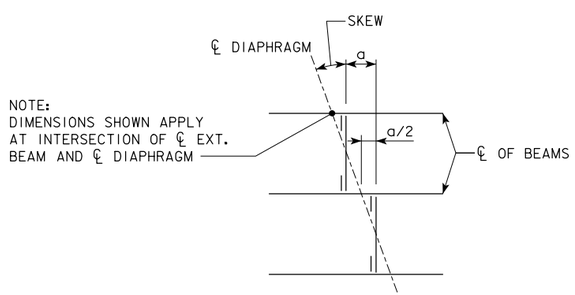

NOTE:
DIMENSIONS SHOWN APPLY AT INTERSECTION OF ℄ EXT. BEAM AND ℄ DIAPHRAGM

SKEW	a (FT.-IN.)
10°	1'-3 11/16
20°	2'-8 5/16
30°	4'-3 1/4

LATEST REVISION DATE

APPROVED BY BRIDGE ENGINEER

IOWA DOT Highway Division

STANDARD DESIGN - 40' ROADWAY, 3 SPAN BRIDGES

ROLLED STEEL BEAM BRIDGES

OCTOBER, 2014

FRAMING PLAN
300'-0 BRIDGE

RS40-055-14

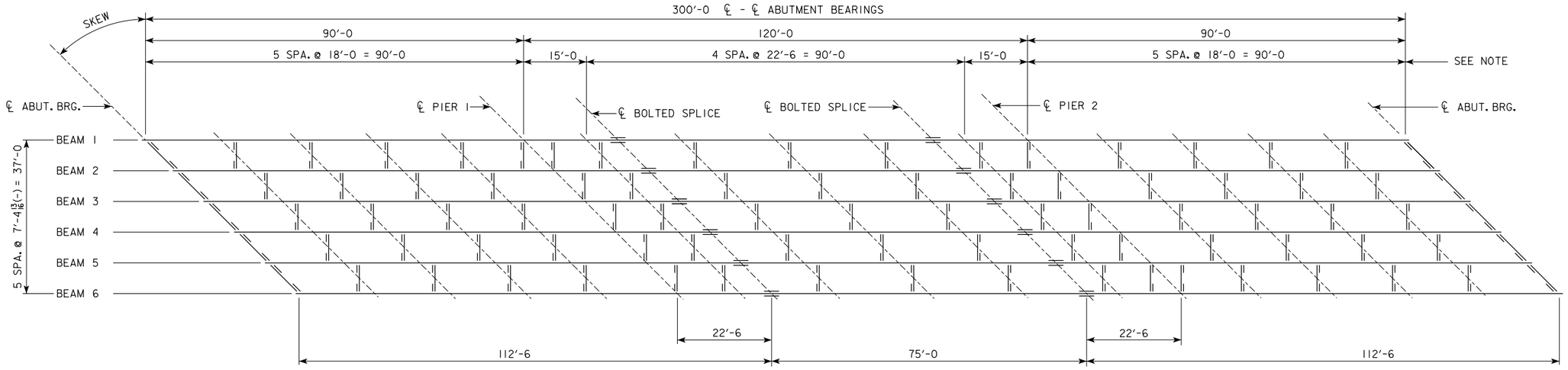

45° SKEWED FRAMING PLAN

(R.A. SHOWN, L.A. SIMILAR)

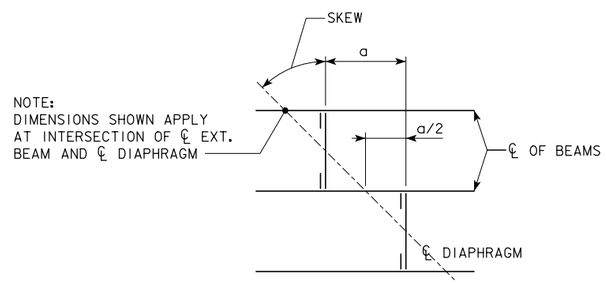

NOTE:
DIMENSIONS SHOWN APPLY AT INTERSECTION OF ℄ EXT. BEAM AND ℄ DIAPHRAGM

SKEW	a (FT.-IN.)
45°	7'-4 13/16

LATEST REVISION DATE

APPROVED BY BRIDGE ENGINEER

IOWA DOT Highway Division

STANDARD DESIGN - 40' ROADWAY, 3 SPAN BRIDGES

ROLLED STEEL BEAM BRIDGES

OCTOBER, 2014

FRAMING PLAN
300'-0 BRIDGE

RS40-056-14

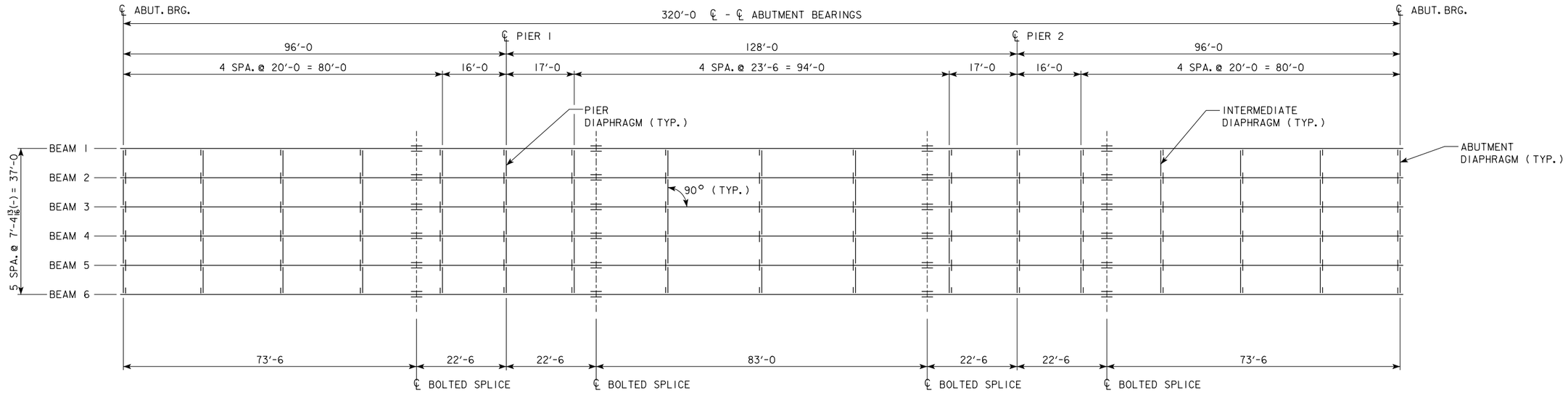

0° SKEW FRAMING PLAN

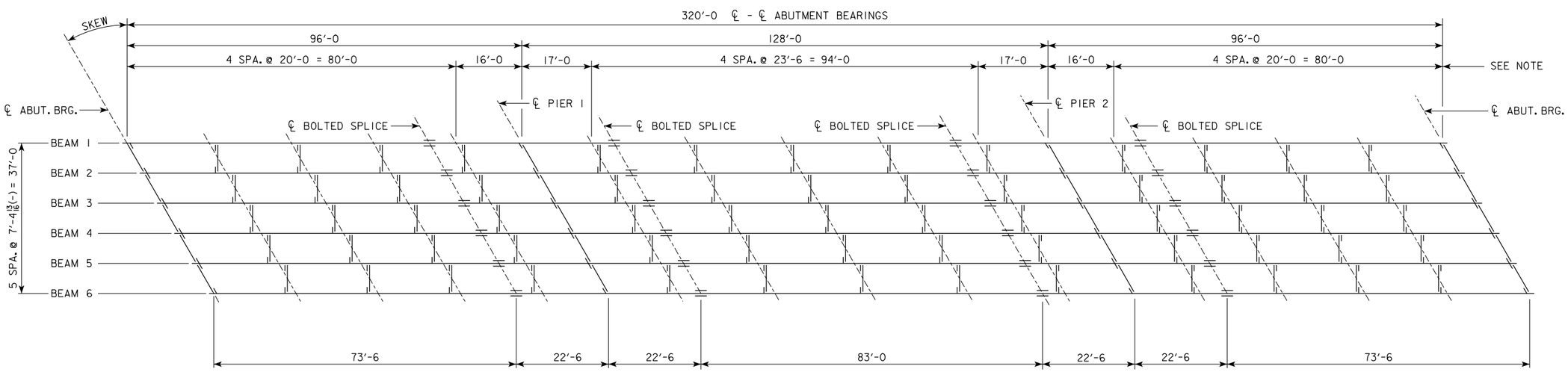

SKEWED FRAMING PLAN

(R.A. SHOWN, L.A. SIMILAR)

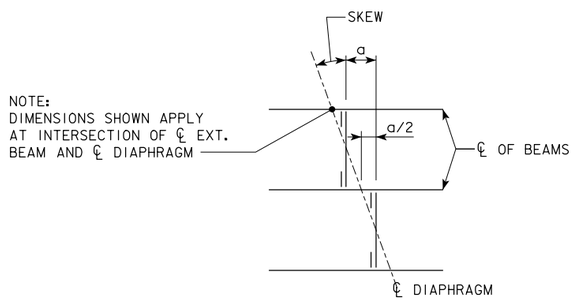

NOTE:
DIMENSIONS SHOWN APPLY AT INTERSECTION OF ℄ EXT. BEAM AND ℄ DIAPHRAGM

SKEW	a (FT.-IN.)
10°	1'-3 11/16
20°	2'-8 5/16
30°	4'-3 1/4

LATEST REVISION DATE

APPROVED BY BRIDGE ENGINEER

IOWA DOT Highway Division

STANDARD DESIGN - 40' ROADWAY, 3 SPAN BRIDGES

ROLLED STEEL BEAM BRIDGES

OCTOBER, 2014

FRAMING PLAN
320'-0 BRIDGE

RS40-057-14

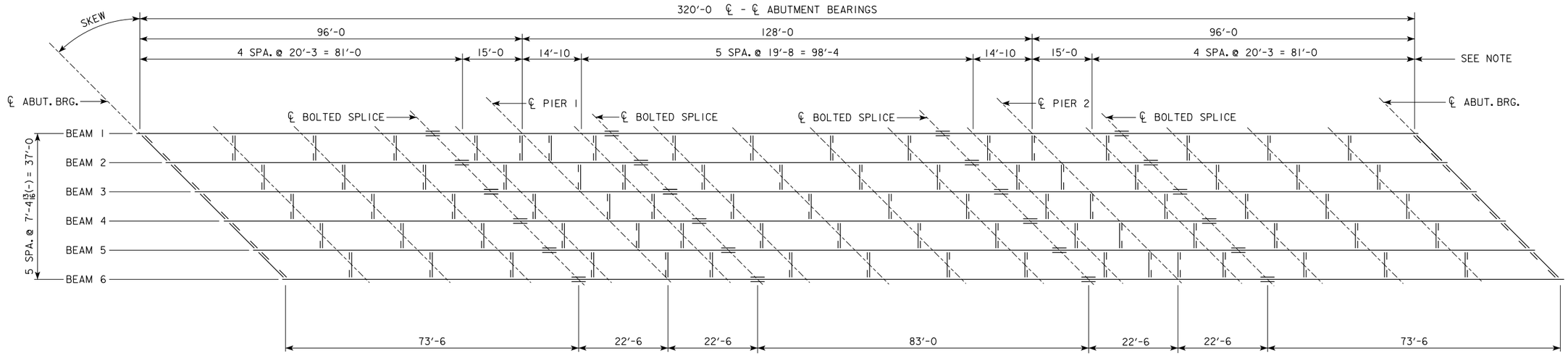

45° SKEWED FRAMING PLAN

(R.A. SHOWN, L.A. SIMILAR)

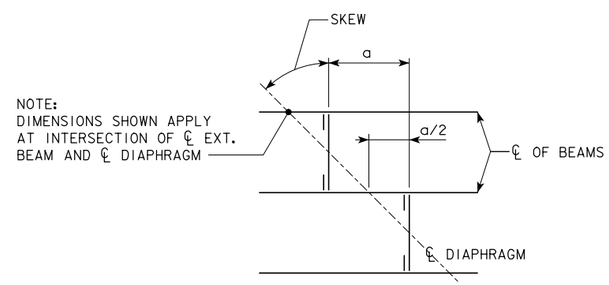

NOTE:
DIMENSIONS SHOWN APPLY AT INTERSECTION OF ℄ EXT. BEAM AND ℄ DIAPHRAGM

SKEW	a (FT.-IN.)
45°	7'-4 13/16

LATEST REVISION DATE

APPROVED BY BRIDGE ENGINEER

IOWA DOT Highway Division

STANDARD DESIGN - 40' ROADWAY, 3 SPAN BRIDGES

ROLLED STEEL BEAM BRIDGES

OCTOBER, 2014

FRAMING PLAN
320'-0 BRIDGE

RS40-058-14

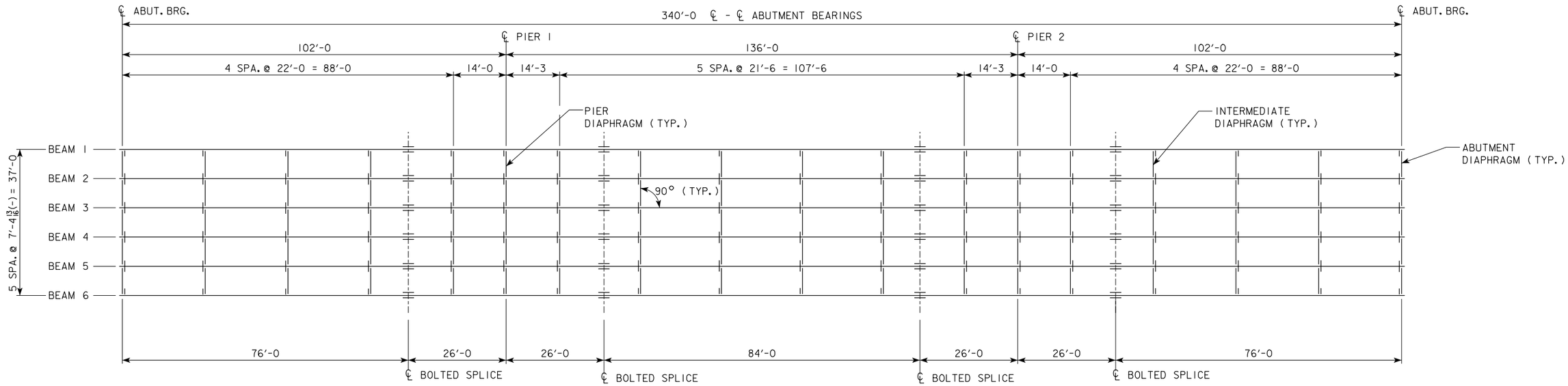

0° SKEW FRAMING PLAN

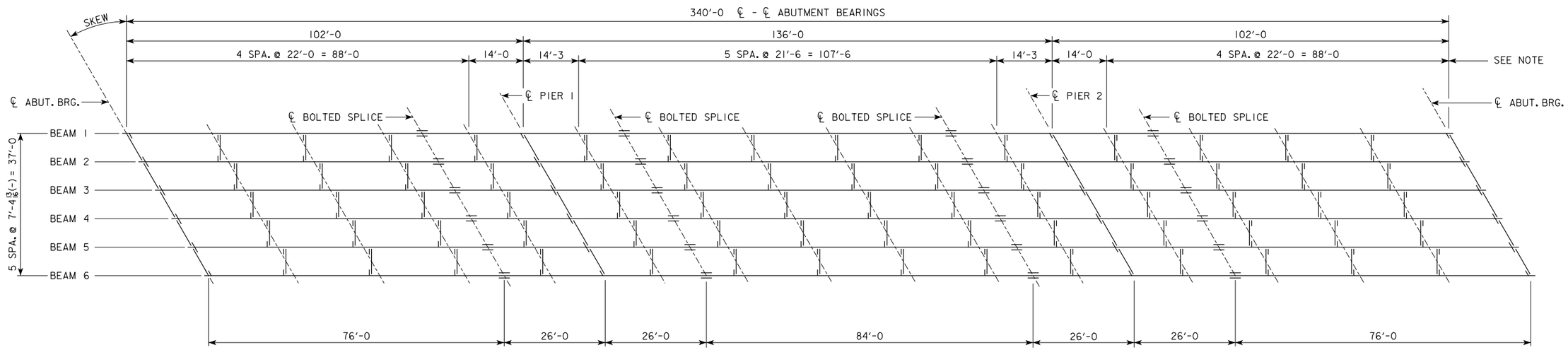

SKEWED FRAMING PLAN

(R.A. SHOWN, L.A. SIMILAR)

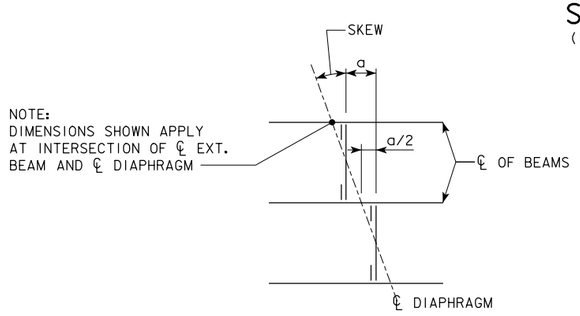

NOTE:
DIMENSIONS SHOWN APPLY AT INTERSECTION OF ℄ EXT. BEAM AND ℄ DIAPHRAGM

SKEW	a (FT.-IN.)
10°	1'-3 11/16
20°	2'-8 5/16
30°	4'-3 1/4

LATEST REVISION DATE

APPROVED BY BRIDGE ENGINEER

IOWA DOT Highway Division

STANDARD DESIGN - 40' ROADWAY, 3 SPAN BRIDGES

ROLLED STEEL BEAM BRIDGES

OCTOBER, 2014

FRAMING PLAN
340'-0 BRIDGE

RS40-059-14

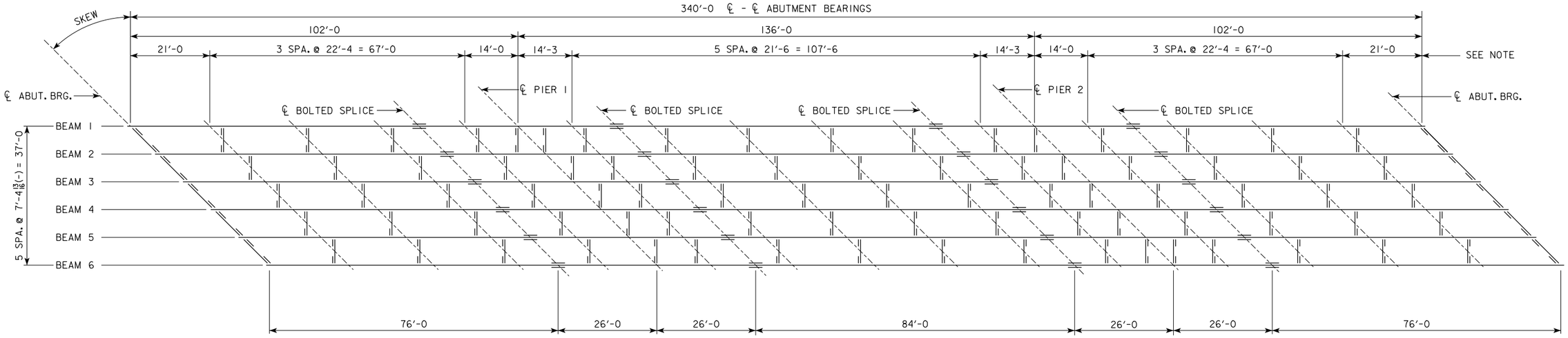

45° SKEWED FRAMING PLAN

(R.A. SHOWN, L.A. SIMILAR)

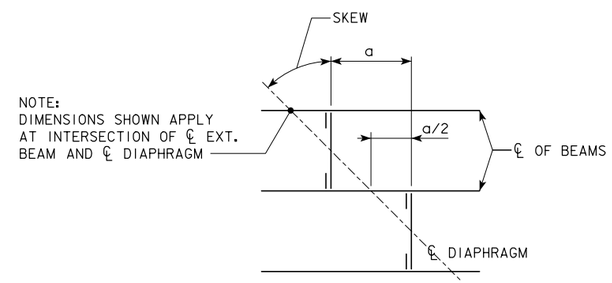

NOTE:
DIMENSIONS SHOWN APPLY AT INTERSECTION OF ℄ EXT. BEAM AND ℄ DIAPHRAGM

SKEW	a (FT.-IN.)
45°	7'-4 13/16

LATEST REVISION DATE

APPROVED BY BRIDGE ENGINEER

IOWADOT Highway Division

STANDARD DESIGN - 40' ROADWAY, 3 SPAN BRIDGES

ROLLED STEEL BEAM BRIDGES

OCTOBER, 2014

FRAMING PLAN
340'-0 BRIDGE

RS40-060-14

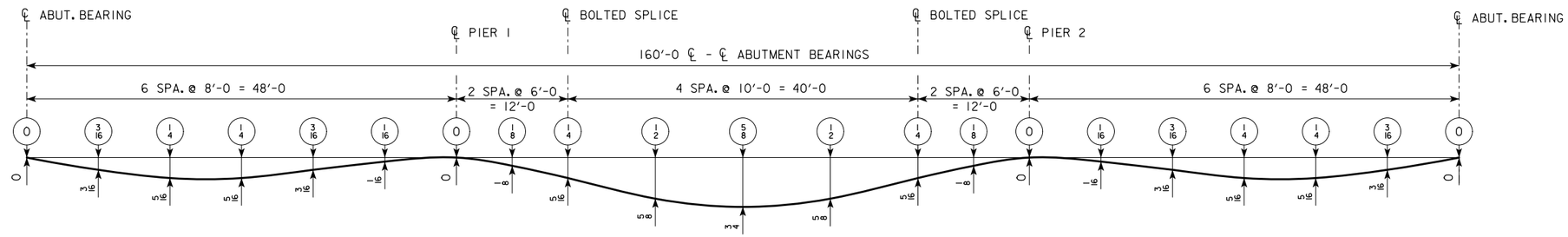

DEAD LOAD DEFLECTION DIAGRAM

NOTES:

1. ENCIRCLED NUMBERS INDICATE ANTICIPATED DEFLECTION DUE TO CONCRETE ONLY.

2. DEFLECTIONS ARE IN INCHES.

MOMENT AND REACTION TABLE

MOMENT - foot-kips | REACTION - kips

LOAD NAME		LOAD - k/ft		POSITIVE MOMENT				NEGATIVE MOMENT		REACTION			
				0.4 PT. END SPAN		0.5 PT. CENTER SPAN		PIER	PIER	ABUTMENT	ABUTMENT	PIER	PIER
		INTERIOR	EXTERIOR	INTERIOR	EXTERIOR	INTERIOR	EXTERIOR	INTERIOR	EXTERIOR	INTERIOR	EXTERIOR	INTERIOR	EXTERIOR
DC1		0.74*	0.72*	129	120	167	155	279	259	16	15	55	51
DC2		0.14	0.14	24	24	35	35	38	38	3	3	9	9
DW		0.15	0.15	25	25	37	36	39	39	3	3	9	9
LIVE LOAD +IMPACT HL-93	DISTRIBUTION FACTOR	MOMENT	MOMENT	538	577	606	699	339	380	-	-	-	-
		0.635	0.681										
		REACTION	REACTION	-	-	-	-	-	-	69	61	101	89
		0.772	0.681										
TOTAL				-	-	-	-	695	716	91	82	174	158

* LOAD VALUES DO NOT INCLUDE GIRDER WEIGHT.
MOMENT AND REACTION VALUES DO INCLUDE GIRDER WEIGHT.
MOMENTS AND REACTIONS SHOWN ARE UNFACTORED.

LATEST REVISION DATE

APPROVED BY BRIDGE ENGINEER

IOWA DOT Highway Division

STANDARD DESIGN - 40' ROADWAY, 3 SPAN BRIDGES

ROLLED STEEL BEAM BRIDGES

OCTOBER, 2014

BEAM DEFLECTIONS 160'-0 BRIDGE

RS40-061-14

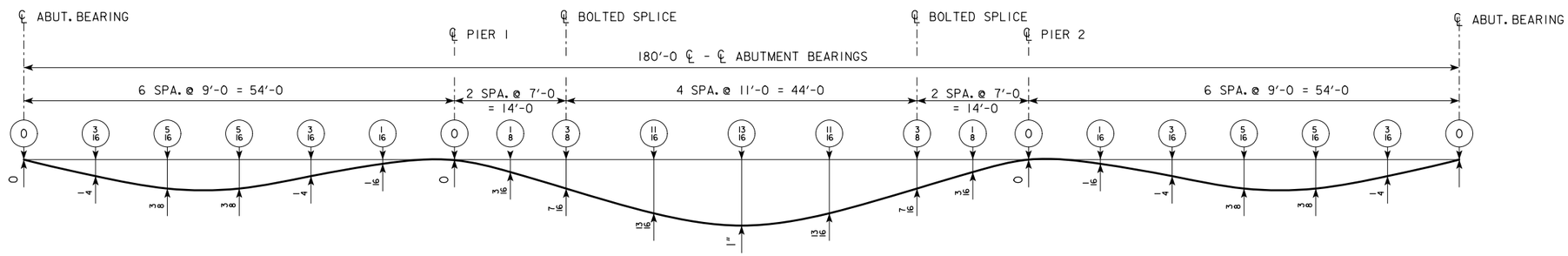

DEAD LOAD DEFLECTION DIAGRAM

NOTES:

1. ENCIRCLED NUMBERS INDICATE ANTICIPATED DEFLECTION DUE TO CONCRETE ONLY.

2. DEFLECTIONS ARE IN INCHES.

MOMENT AND REACTION TABLE

MOMENT - foot-kips | REACTION - kips

LOAD NAME		LOAD - k/ft		POSITIVE MOMENT				NEGATIVE MOMENT		REACTION			
				0.4 PT. END SPAN		0.5 PT. CENTER SPAN		PIER	PIER	ABUTMENT	ABUTMENT	PIER	PIER
		INTERIOR	EXTERIOR	INTERIOR	EXTERIOR	INTERIOR	EXTERIOR	INTERIOR	EXTERIOR	INTERIOR	EXTERIOR	INTERIOR	EXTERIOR
DC1		0.74*	0.72*	166	155	202	187	370	344	18	17	63	59
DC2		0.14	0.14	30	30	42	42	50	50	3	3	10	10
DW		0.15	0.15	31	31	44	44	52	52	3	3	10	10
LIVE LOAD +IMPACT HL-93	DISTRIBUTION FACTOR	MOMENT	MOMENT	639	690	691	812	429	485	-	-	-	-
		0.630	0.681										
		REACTION	REACTION	-	-	-	-	-	-	72	64	106	94
		0.772	0.681										
TOTAL				-	-	-	-	901	931	96	87	189	173

* LOAD VALUES DO NOT INCLUDE GIRDER WEIGHT.
MOMENT AND REACTION VALUES DO INCLUDE GIRDER WEIGHT.
MOMENTS AND REACTIONS SHOWN ARE UNFACTORED.

LATEST REVISION DATE

APPROVED BY BRIDGE ENGINEER

IOWA DOT Highway Division

STANDARD DESIGN - 40' ROADWAY, 3 SPAN BRIDGES

ROLLED STEEL BEAM BRIDGES

OCTOBER, 2014

BEAM DEFLECTIONS
180'-0 BRIDGE

RS40-062-14

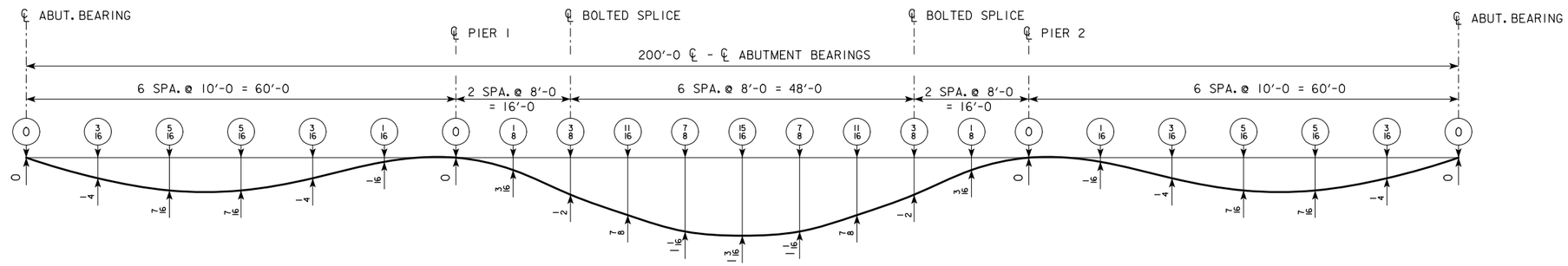

DEAD LOAD DEFLECTION DIAGRAM

NOTES:

1. ENCIRCLED NUMBERS INDICATE ANTICIPATED DEFLECTION DUE TO CONCRETE ONLY.

2. DEFLECTIONS ARE IN INCHES.

MOMENT AND REACTION TABLE

MOMENT - foot-kips | REACTION - kips

LOAD NAME		LOAD - k/ft		POSITIVE MOMENT				NEGATIVE MOMENT		REACTION			
				0.4 PT. END SPAN		0.5 PT. CENTER SPAN		PIER	PIER	ABUTMENT	ABUTMENT	PIER	PIER
		INTERIOR	EXTERIOR	INTERIOR	EXTERIOR	INTERIOR	EXTERIOR	INTERIOR	EXTERIOR	INTERIOR	EXTERIOR	INTERIOR	EXTERIOR
DC1		0.74*	0.72*	209	196	249	231	470	438	21	20	72	67
DC2		0.14	0.14	36	36	51	51	63	63	3	3	11	11
DW		0.15	0.15	38	38	53	53	65	66	3	3	11	11
LIVE LOAD +IMPACT HL-93	DISTRIBUTION FACTOR	MOMENT	MOMENT	745	806	792	935	549	623	-	-	-	-
		0.629	0.681										
		REACTION	REACTION	-	-	-	-	-	-	75	66	111	98
		0.772	0.681										
TOTAL				-	-	-	-	1147	1190	102	92	205	187

* LOAD VALUES DO NOT INCLUDE GIRDER WEIGHT.
MOMENT AND REACTION VALUES DO INCLUDE GIRDER WEIGHT.
MOMENTS AND REACTIONS SHOWN ARE UNFACTORED.

LATEST REVISION DATE

APPROVED BY BRIDGE ENGINEER

IOWA DOT Highway Division

STANDARD DESIGN - 40' ROADWAY, 3 SPAN BRIDGES

ROLLED STEEL BEAM BRIDGES

OCTOBER, 2014

BEAM DEFLECTIONS 200'-0 BRIDGE

RS40-063-14

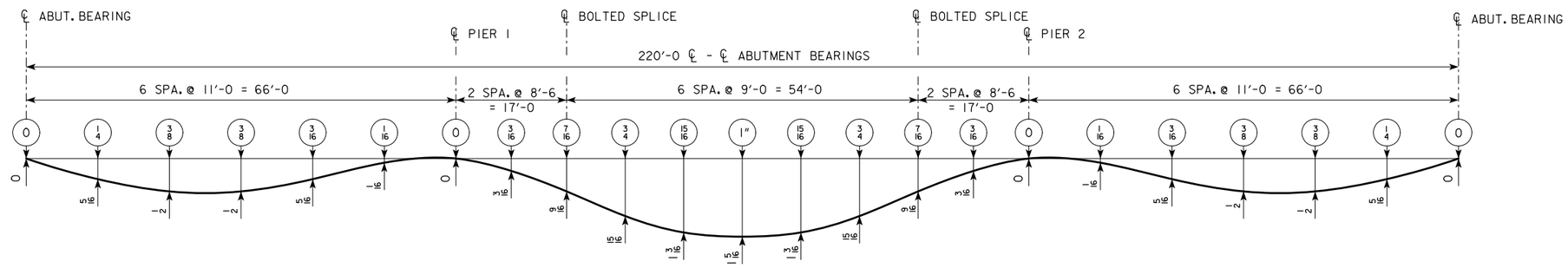

DEAD LOAD DEFLECTION DIAGRAM

NOTES:

1. ENCIRCLED NUMBERS INDICATE ANTICIPATED DEFLECTION DUE TO CONCRETE ONLY.

2. DEFLECTIONS ARE IN INCHES.

MOMENT AND REACTION TABLE

MOMENT - foot-kips | REACTION - kips

LOAD NAME		LOAD - k/ft		POSITIVE MOMENT				NEGATIVE MOMENT		REACTION			
				0.4 PT. END SPAN		0.5 PT. CENTER SPAN		PIER	PIER	ABUTMENT	ABUTMENT	PIER	PIER
		INTERIOR	EXTERIOR	INTERIOR	EXTERIOR	INTERIOR	EXTERIOR	INTERIOR	EXTERIOR	INTERIOR	EXTERIOR	INTERIOR	EXTERIOR
DC1		0.74*	0.72*	260	243	307	286	579	541	23	22	80	75
DC2		0.14	0.14	44	44	62	62	75	76	4	4	12	12
DW		0.15	0.15	46	46	65	64	79	79	4	4	13	13
LIVE LOAD +IMPACT HL-93	DISTRIBUTION FACTOR	MOMENT	MOMENT	841	913	943	1115	648	738	-	-	-	-
		0.626	0.681										
		REACTION	REACTION	-	-	-	-	-	-	77	68	118	104
		0.772	0.681										
TOTAL				-	-	-	-	1381	1434	108	98	223	204

* LOAD VALUES DO NOT INCLUDE GIRDER WEIGHT.
MOMENT AND REACTION VALUES DO INCLUDE GIRDER WEIGHT.
MOMENTS AND REACTIONS SHOWN ARE UNFACTORED.

LATEST REVISION DATE

APPROVED BY BRIDGE ENGINEER

IOWA DOT Highway Division

STANDARD DESIGN - 40' ROADWAY, 3 SPAN BRIDGES

ROLLED STEEL BEAM BRIDGES

OCTOBER, 2014

BEAM DEFLECTIONS 220'-0 BRIDGE

RS40-064-14

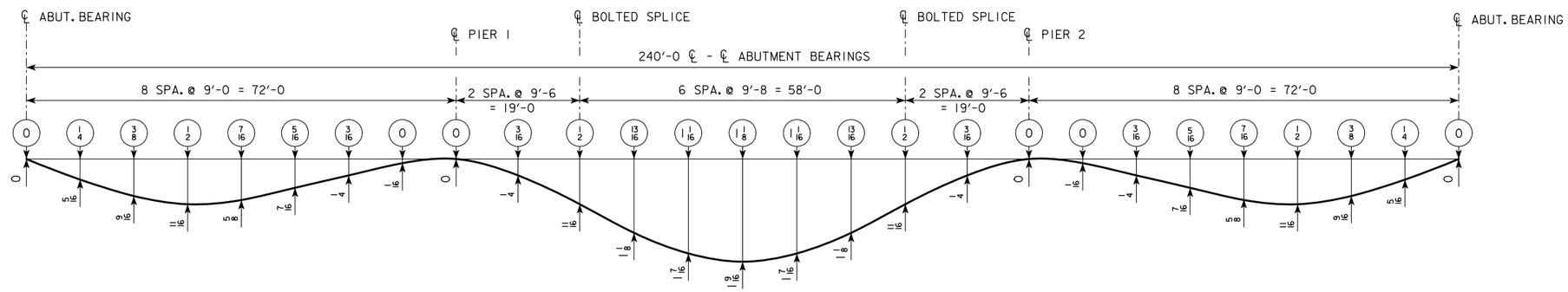

DEAD LOAD DEFLECTION DIAGRAM

NOTES:

1. ENCIRCLED NUMBERS INDICATE ANTICIPATED DEFLECTION DUE TO CONCRETE ONLY.

2. DEFLECTIONS ARE IN INCHES.

MOMENT AND REACTION TABLE

MOMENT - foot-kips | REACTION - kips

LOAD NAME		LOAD - k/ft		POSITIVE MOMENT				NEGATIVE MOMENT		REACTION			
				0.4 PT. END SPAN		0.5 PT. CENTER SPAN		PIER	PIER	ABUTMENT	ABUTMENT	PIER	PIER
		INTERIOR	EXTERIOR	INTERIOR	EXTERIOR	INTERIOR	EXTERIOR	INTERIOR	EXTERIOR	INTERIOR	EXTERIOR	INTERIOR	EXTERIOR
DC1		0.74*	0.72*	322	301	401	374	698	653	26	24	90	85
DC2		0.14	0.14	53	52	75	74	89	90	4	4	13	13
DW		0.15	0.15	55	55	78	77	93	93	4	4	14	14
LIVE LOAD +IMPACT HL-93	DISTRIBUTION FACTOR	MOMENT	MOMENT	943	1035	1077	1277	735	847	-	-	-	-
		0.620	0.681										
		REACTION	REACTION	-	-	-	-	-	-	79	70	128	113
		0.772	0.681										
TOTAL				-	-	-	-	1615	1683	113	102	245	225

* LOAD VALUES DO NOT INCLUDE GIRDER WEIGHT.
MOMENT AND REACTION VALUES DO INCLUDE GIRDER WEIGHT.
MOMENTS AND REACTIONS SHOWN ARE UNFACTORED.

LATEST REVISION DATE

APPROVED BY BRIDGE ENGINEER

IOWA DOT Highway Division

STANDARD DESIGN - 40' ROADWAY, 3 SPAN BRIDGES

ROLLED STEEL BEAM BRIDGES

OCTOBER, 2014

BEAM DEFLECTIONS 240'-0 BRIDGE

RS40-065-14

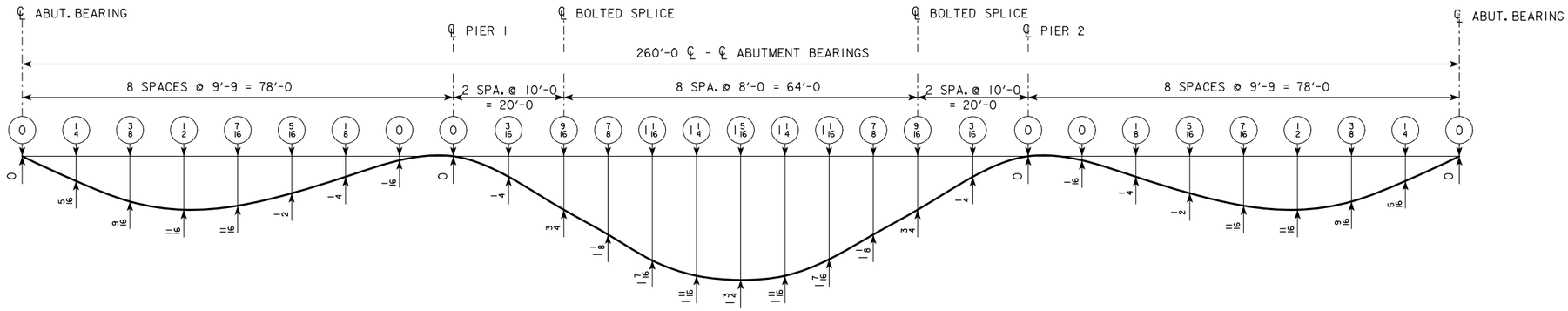

DEAD LOAD DEFLECTION DIAGRAM

NOTES:

1. ENCIRCLED NUMBERS INDICATE ANTICIPATED DEFLECTION DUE TO CONCRETE ONLY.

2. DEFLECTIONS ARE IN INCHES.

MOMENT AND REACTION TABLE

MOMENT - foot-kips | REACTION - kips

LOAD NAME		LOAD - k/ft		POSITIVE MOMENT				NEGATIVE MOMENT		REACTION			
				0.4 PT. END SPAN		0.5 PT. CENTER SPAN		PIER	PIER	ABUTMENT	ABUTMENT	PIER	PIER
		INTERIOR	EXTERIOR	INTERIOR	EXTERIOR	INTERIOR	EXTERIOR	INTERIOR	EXTERIOR	INTERIOR	EXTERIOR	INTERIOR	EXTERIOR
DC1		0.74*	0.72*	385	362	440	411	848	794	29	27	100	94
DC2		0.14	0.14	60	60	83	83	109	109	4	4	14	14
DW		0.15	0.15	63	62	87	86	113	114	4	4	15	15
LIVE LOAD +IMPACT HL-93	DISTRIBUTION FACTOR	MOMENT	MOMENT	1053	1159	1163	1391	870	1004	-	-	-	-
		0.618	0.681										
		REACTION	REACTION	-	-	-	-	-	-	82	72	138	122
		0.772	0.681										
TOTAL				-	-	-	-	1940	2021	119	107	267	245

* LOAD VALUES DO NOT INCLUDE GIRDER WEIGHT.
MOMENT AND REACTION VALUES DO INCLUDE GIRDER WEIGHT.
MOMENTS AND REACTIONS SHOWN ARE UNFACTORED.

LATEST REVISION DATE

APPROVED BY BRIDGE ENGINEER

IOWA DOT Highway Division

STANDARD DESIGN - 40' ROADWAY, 3 SPAN BRIDGES

ROLLED STEEL BEAM BRIDGES

OCTOBER, 2014

BEAM DEFLECTIONS 260'-0 BRIDGE

RS40-066-14

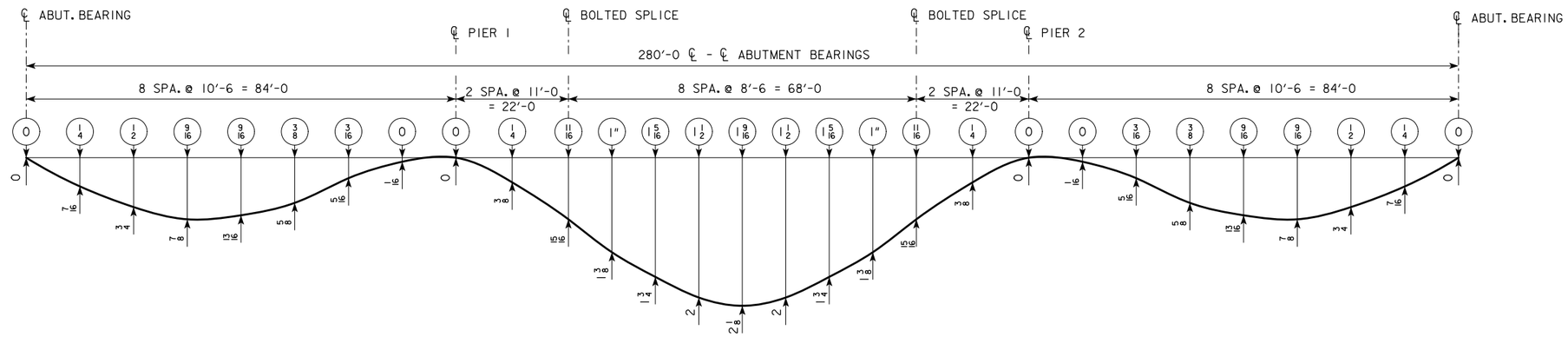

DEAD LOAD DEFLECTION DIAGRAM

NOTES:

1. ENCIRCLED NUMBERS INDICATE ANTICIPATED DEFLECTION DUE TO CONCRETE ONLY.

2. DEFLECTIONS ARE IN INCHES.

MOMENT AND REACTION TABLE

MOMENT - foot-kips | REACTION - kips

LOAD NAME		LOAD - k/ft		POSITIVE MOMENT				NEGATIVE MOMENT		REACTION			
				0.4 PT. END SPAN		0.5 PT. CENTER SPAN		PIER	PIER	ABUTMENT	ABUTMENT	PIER	PIER
		INTERIOR	EXTERIOR	INTERIOR	EXTERIOR	INTERIOR	EXTERIOR	INTERIOR	EXTERIOR	INTERIOR	EXTERIOR	INTERIOR	EXTERIOR
DC1		0.74*	0.72*	456	429	523	489	998	935	31	30	109	103
DC2		0.14	0.14	70	69	96	95	127	127	4	4	15	15
DW		0.15	0.15	73	72	100	99	132	133	5	5	16	16
LIVE LOAD +IMPACT HL-93	DISTRIBUTION FACTOR	MOMENT	MOMENT	1159	1288	1273	1538	962	1122	-	-	-	-
		0.612	0.681										
		REACTION	REACTION	-	-	-	-	-	-	84	74	146	129
		0.772	0.681										
TOTAL				-	-	-	-	2219	2317	124	113	286	263

* LOAD VALUES DO NOT INCLUDE GIRDER WEIGHT.
MOMENT AND REACTION VALUES DO INCLUDE GIRDER WEIGHT.
MOMENTS AND REACTIONS SHOWN ARE UNFACTORED.

LATEST REVISION DATE

APPROVED BY BRIDGE ENGINEER

IOWA DOT Highway Division

STANDARD DESIGN - 40' ROADWAY, 3 SPAN BRIDGES

ROLLED STEEL BEAM BRIDGES

OCTOBER, 2014

BEAM DEFLECTIONS
280'-0 BRIDGE

RS40-067-14

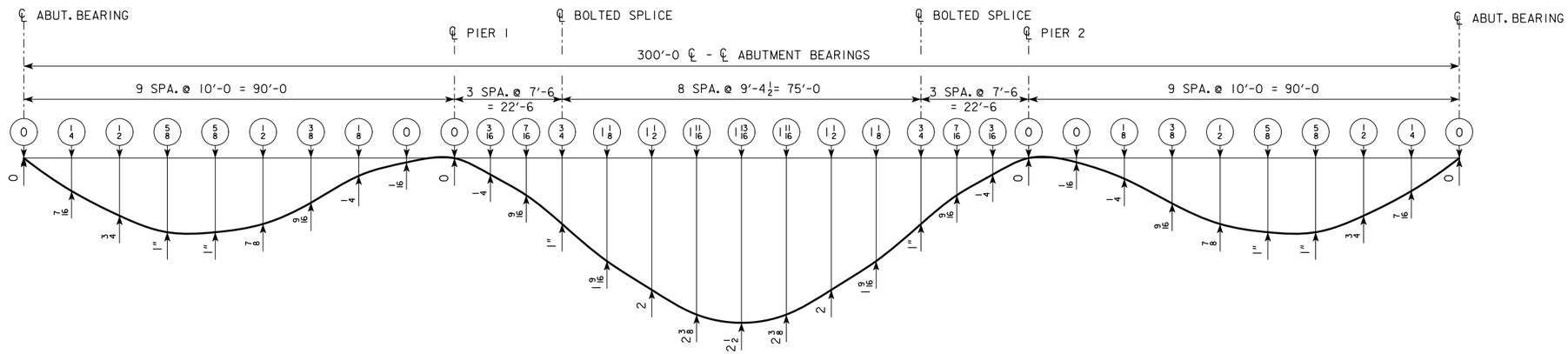

DEAD LOAD DEFLECTION DIAGRAM

NOTES:

1. ENCIRCLED NUMBERS INDICATE ANTICIPATED DEFLECTION DUE TO CONCRETE ONLY.

2. DEFLECTIONS ARE IN INCHES.

MOMENT AND REACTION TABLE

MOMENT - foot-kips REACTION - kips

LOAD NAME		LOAD - k/ft		POSITIVE MOMENT				NEGATIVE MOMENT		REACTION			
				0.4 PT. END SPAN		0.5 PT. CENTER SPAN		PIER	PIER	ABUTMENT	ABUTMENT	PIER	PIER
		INTERIOR	EXTERIOR	INTERIOR	EXTERIOR	INTERIOR	EXTERIOR	INTERIOR	EXTERIOR	INTERIOR	EXTERIOR	INTERIOR	EXTERIOR
DC1		0.74*	0.72*	542	511	606	567	1189	1117	35	33	121	114
DC2		0.14	0.14	79	78	107	106	148	149	5	5	17	17
DW		0.15	0.15	82	82	112	111	155	156	5	5	17	17
LIVE LOAD +IMPACT HL-93	DISTRIBUTION FACTOR	MOMENT	MOMENT	1272	1420	1370	1669	1083	1269	-	-	-	-
		0.609	0.681										
		REACTION	REACTION	-	-	-	-	-	-	86	76	154	135
		0.772	0.681										
TOTAL				-	-	-	-	2575	2691	131	119	309	283

* LOAD VALUES DO NOT INCLUDE GIRDER WEIGHT.
MOMENT AND REACTION VALUES DO INCLUDE GIRDER WEIGHT.
MOMENTS AND REACTIONS SHOWN ARE UNFACTORED.

LATEST REVISION DATE

APPROVED BY BRIDGE ENGINEER

IOWA DOT Highway Division

STANDARD DESIGN - 40' ROADWAY, 3 SPAN BRIDGES

ROLLED STEEL BEAM BRIDGES

OCTOBER, 2014

BEAM DEFLECTIONS 300'-0 BRIDGE

RS40-068-14

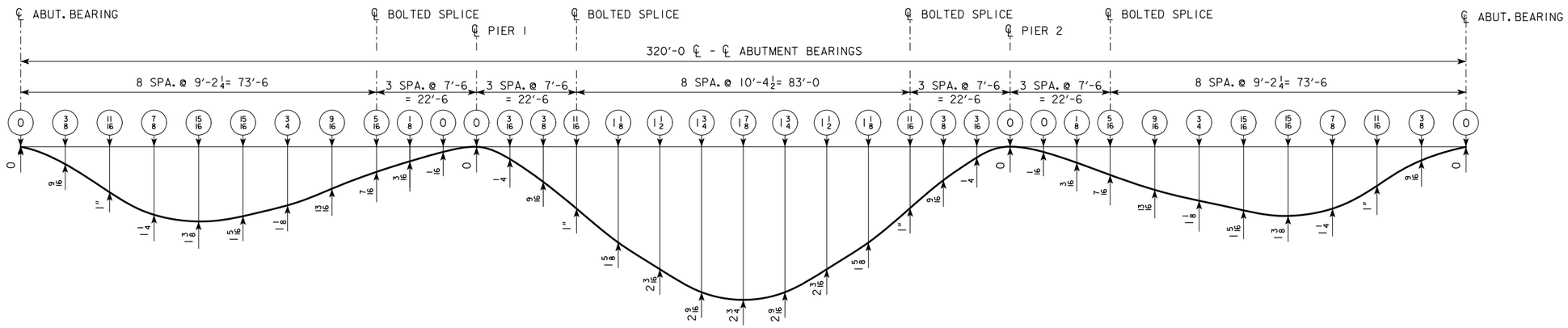

DEAD LOAD DEFLECTION DIAGRAM

NOTES:

1. ENCIRCLED NUMBERS INDICATE ANTICIPATED DEFLECTION DUE TO CONCRETE ONLY.

2. DEFLECTIONS ARE IN INCHES.

MOMENT AND REACTION TABLE

MOMENT - foot-kips | REACTION - kips

LOAD NAME		LOAD - k/ft		POSITIVE MOMENT				NEGATIVE MOMENT		REACTION			
				0.4 PT. END SPAN		0.5 PT. CENTER SPAN		PIER	PIER	ABUTMENT	ABUTMENT	PIER	PIER
		INTERIOR	EXTERIOR	INTERIOR	EXTERIOR	INTERIOR	EXTERIOR	INTERIOR	EXTERIOR	INTERIOR	EXTERIOR	INTERIOR	EXTERIOR
DC1		0.74*	0.72*	565	531	680	639	1406	1321	35	33	132	124
DC2		0.14	0.14	87	86	115	114	175	176	5	5	18	18
DW		0.15	0.15	91	90	120	119	183	184	5	5	18	18
LIVE LOAD +IMPACT HL-93	DISTRIBUTION FACTOR	MOMENT	MOMENT	1302	1500	1511	1869	1260	1488	-	-	-	-
		0.591	0.681										
		REACTION	REACTION	-	-	-	-	-	-	87	77	163	143
		0.772	0.681										
TOTAL				-	-	-	-	3024	3169	132	120	331	303

* LOAD VALUES DO NOT INCLUDE GIRDER WEIGHT.
MOMENT AND REACTION VALUES DO INCLUDE GIRDER WEIGHT.
MOMENTS AND REACTIONS SHOWN ARE UNFACTORED.

LATEST REVISION DATE

APPROVED BY BRIDGE ENGINEER

IOWA DOT Highway Division

STANDARD DESIGN - 40' ROADWAY, 3 SPAN BRIDGES

ROLLED STEEL BEAM BRIDGES

OCTOBER, 2014

BEAM DEFLECTIONS 320'-0 BRIDGE

RS40-069-14

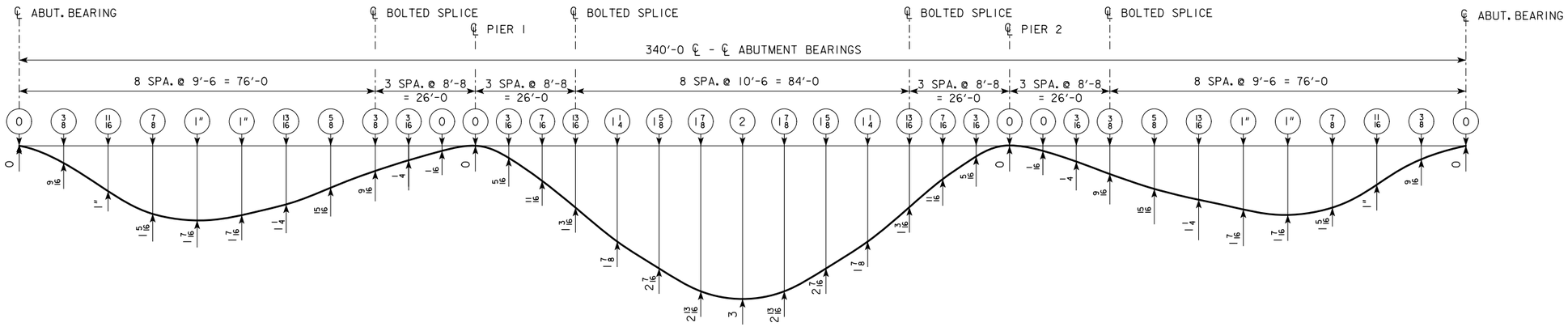

DEAD LOAD DEFLECTION DIAGRAM

NOTES:

1. ENCIRCLED NUMBERS INDICATE ANTICIPATED DEFLECTION DUE TO CONCRETE ONLY.

2. DEFLECTIONS ARE IN INCHES.

MOMENT AND REACTION TABLE

MOMENT - foot-kips | REACTION - kips

LOAD NAME		LOAD - k/ft		POSITIVE MOMENT				NEGATIVE MOMENT		REACTION			
				0.4 PT. END SPAN		0.5 PT. CENTER SPAN		PIER	PIER	ABUTMENT	ABUTMENT	PIER	PIER
		INTERIOR	EXTERIOR	INTERIOR	EXTERIOR	INTERIOR	EXTERIOR	INTERIOR	EXTERIOR	INTERIOR	EXTERIOR	INTERIOR	EXTERIOR
DC1		0.74*	0.72*	655	615	798	750	1589	1494	38	36	141	132
DC2		0.14	0.14	99	99	133	132	195	197	5	5	19	19
DW		0.15	0.15	103	103	139	137	204	205	6	6	20	20
LIVE LOAD +IMPACT HL-93	DISTRIBUTION FACTOR	MOMENT	MOMENT	1459	1675	1611	1988	1316	1560	-	-	-	-
		0.592	0.681										
		REACTION	REACTION	-	-	-	-	-	-	89	79	167	148
		0.772	0.681										
TOTAL				-	-	-	-	3304	3456	138	126	347	319

* LOAD VALUES DO NOT INCLUDE GIRDER WEIGHT.
MOMENT AND REACTION VALUES DO INCLUDE GIRDER WEIGHT.
MOMENTS AND REACTIONS SHOWN ARE UNFACTORED.

LATEST REVISION DATE

APPROVED BY BRIDGE ENGINEER

IOWA DOT Highway Division

STANDARD DESIGN - 40' ROADWAY, 3 SPAN BRIDGES

ROLLED STEEL BEAM BRIDGES

OCTOBER, 2014

BEAM DEFLECTIONS 340'-0 BRIDGE

RS40-070-14

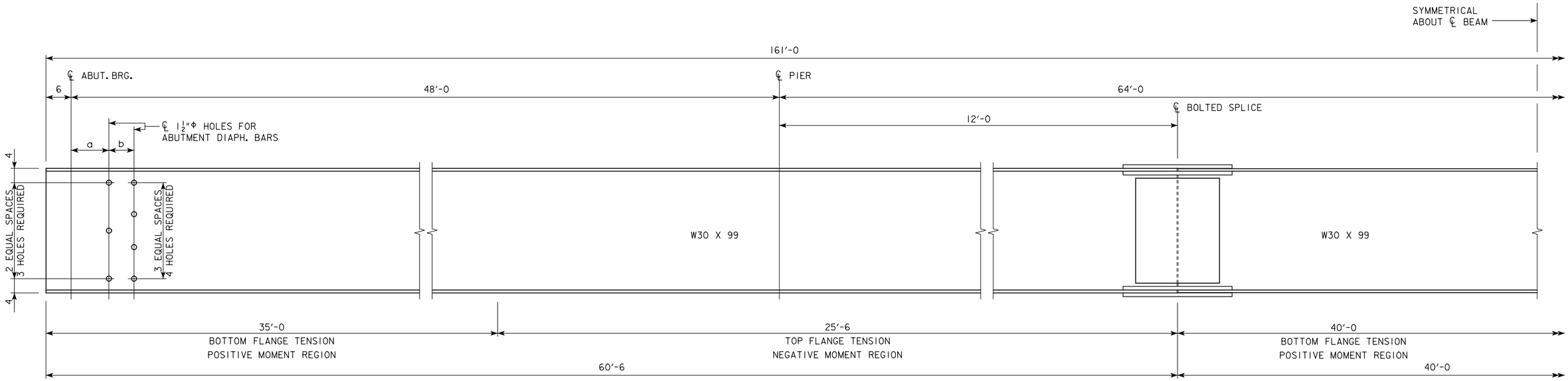

BEAM ELEVATION

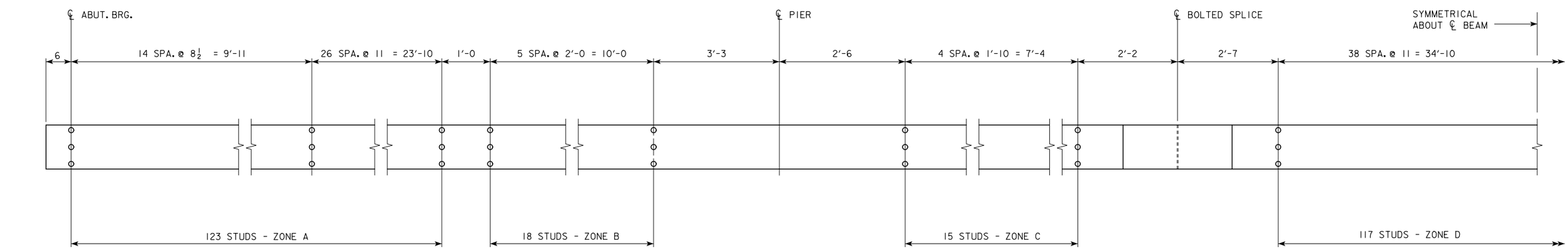

SHEAR STUD SPACING

* NOTE: STUD HEIGHTS (3½", 4" OR 5") FOR THE LOCATIONS SHOWN SHALL BE DETERMINED BY THE DESIGNER. ON "MISCELLANEOUS DETAILS 160'-0 BRIDGE" SHEET, STUD HEIGHTS CAN BE IDENTIFIED BY THE DESIGNER IN A TABLE CORRESPONDING TO THE ZONES LISTED ON THIS SHEET.

Δ WEIGHT OF SHEAR STUDS ARE NOT INCLUDED, SEE MISC. DETAILS - STANDARDS 5252 TO 5261.

STRUCTURAL STEEL
Δ BEAM WEIGHT
15,939 LBS.

NOTE: STRUCTURAL STEEL WEIGHT IS INCLUDED ON THE SUMMARY QUANTITIES SHEET.

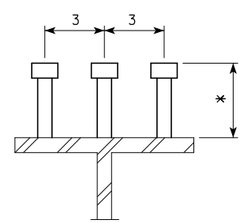

3 STUDS PER ROW

SHEAR STUD DETAILS

NOTE : ALL STUDS TO BE ⅞"Φ

SKEW	a (IN)	b (IN)
0°	9	6
10°	9⅛	6⅛
20°	9⅝	6⅜
30°	10⅜	6⅞
45°	12¾	8½

LATEST REVISION DATE

APPROVED BY BRIDGE ENGINEER

IOWA DOT Highway Division

STANDARD DESIGN - 40' ROADWAY, 3 SPAN BRIDGES

ROLLED STEEL BEAM BRIDGES

OCTOBER, 2014

BEAM PLAN AND ELEVATION 160'-0 BRIDGE

RS40-071-14

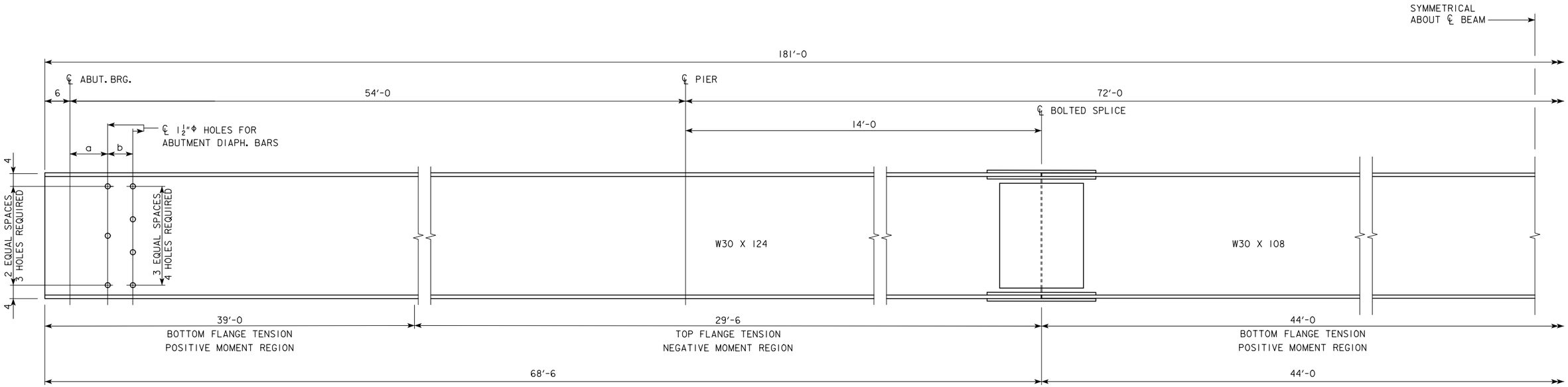

BEAM ELEVATION

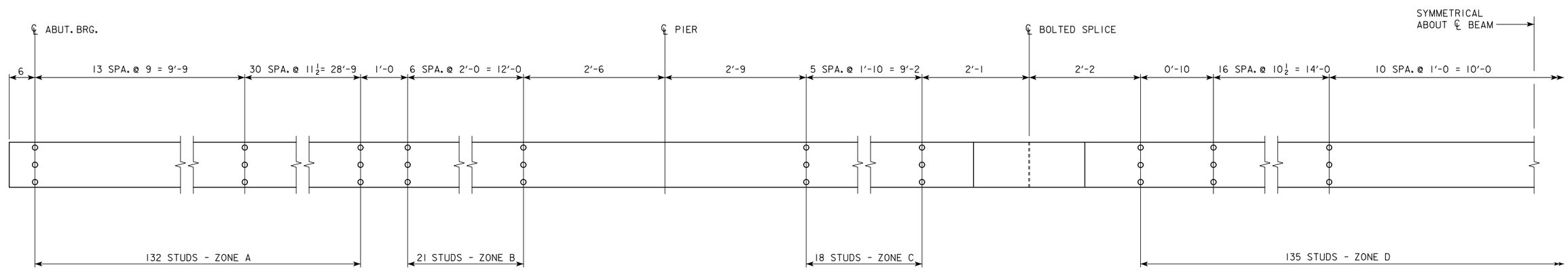

SHEAR STUD SPACING

* NOTE: STUD HEIGHTS (3½", 4" OR 5") FOR THE LOCATIONS SHOWN SHALL BE DETERMINED BY THE DESIGNER. ON "MISCELLANEOUS DETAILS 160'-0 BRIDGE" SHEET, STUD HEIGHTS CAN BE IDENTIFIED BY THE DESIGNER IN A TABLE CORRESPONDING TO THE ZONES LISTED ON THIS SHEET.

Δ WEIGHT OF SHEAR STUDS ARE NOT INCLUDED, SEE MISC. DETAILS - STANDARDS 5252 TO 5261.

STRUCTURAL STEEL
Δ BEAM WEIGHT
21,740 LBS.

NOTE: STRUCTURAL STEEL WEIGHT IS INCLUDED ON THE SUMMARY QUANTITIES SHEET.

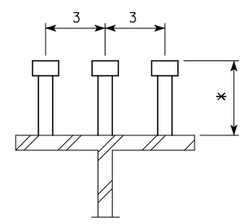

3 STUDS PER ROW

SHEAR STUD DETAILS

NOTE : ALL STUDS TO BE ⅞"Φ

SKEW	a (IN)	b (IN)
0°	9	6
10°	9⅛	6⅛
20°	9⅝	6⅜
30°	10⅜	6⅞
45°	12¾	8½

LATEST REVISION DATE

APPROVED BY BRIDGE ENGINEER

IOWA DOT Highway Division

STANDARD DESIGN - 40' ROADWAY, 3 SPAN BRIDGES

ROLLED STEEL BEAM BRIDGES

OCTOBER, 2014

BEAM PLAN AND ELEVATION 180'-0 BRIDGE

RS40-072-14

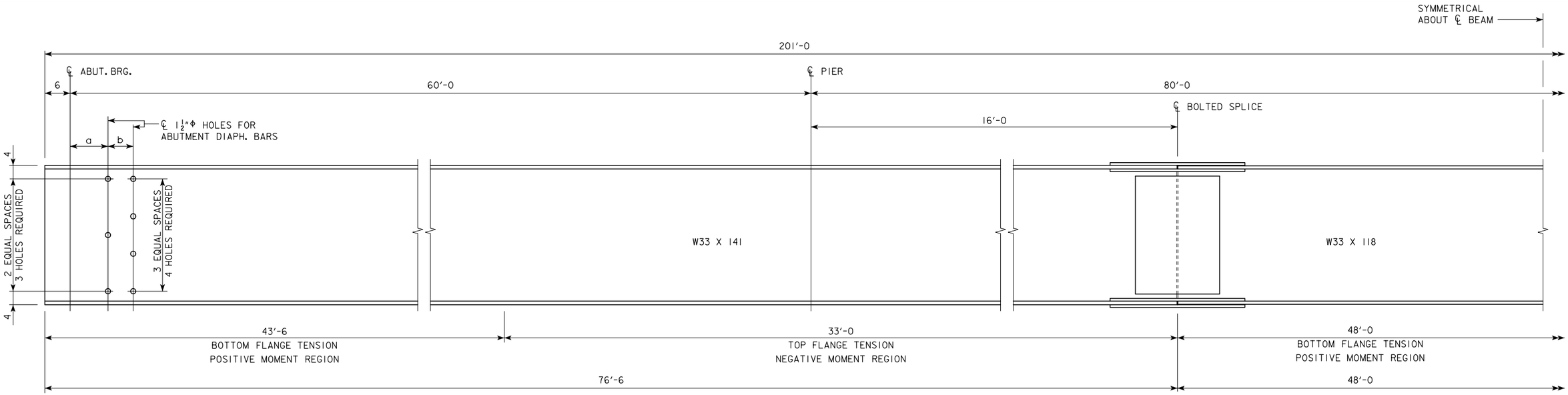

BEAM ELEVATION

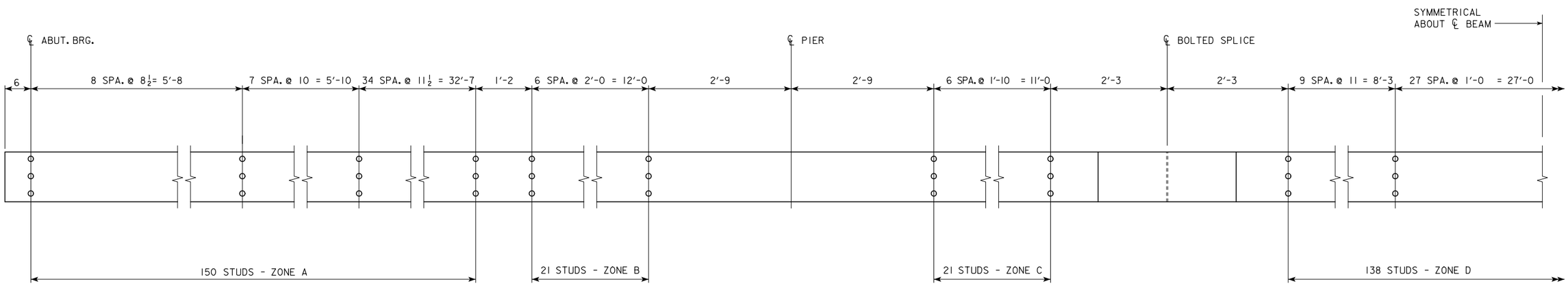

SHEAR STUD SPACING

* NOTE: STUD HEIGHTS (3½", 4" OR 5") FOR THE LOCATIONS SHOWN SHALL BE DETERMINED BY THE DESIGNER. ON "MISCELLANEOUS DETAILS 160'-0 BRIDGE" SHEET, STUD HEIGHTS CAN BE IDENTIFIED BY THE DESIGNER IN A TABLE CORRESPONDING TO THE ZONES LISTED ON THIS SHEET.

Δ WEIGHT OF SHEAR STUDS ARE NOT INCLUDED, SEE MISC. DETAILS - STANDARDS 5252 TO 5261.

STRUCTURAL STEEL
Δ BEAM WEIGHT
27,237 LBS.

NOTE: STRUCTURAL STEEL WEIGHT IS INCLUDED ON THE SUMMARY QUANTITIES SHEET.

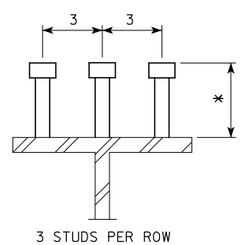

3 STUDS PER ROW

SHEAR STUD DETAILS

NOTE : ALL STUDS TO BE ⅞"Φ

SKEW	a (IN)	b (IN)
0°	9	6
10°	9⅛	6⅛
20°	9⅝	6⅜
30°	10⅜	6⅞
45°	12¾	8½

LATEST REVISION DATE

APPROVED BY BRIDGE ENGINEER

IOWADOT Highway Division

STANDARD DESIGN - 40' ROADWAY, 3 SPAN BRIDGES

ROLLED STEEL BEAM BRIDGES

OCTOBER, 2014

BEAM PLAN AND ELEVATION 200'-0 BRIDGE

RS40-073-14

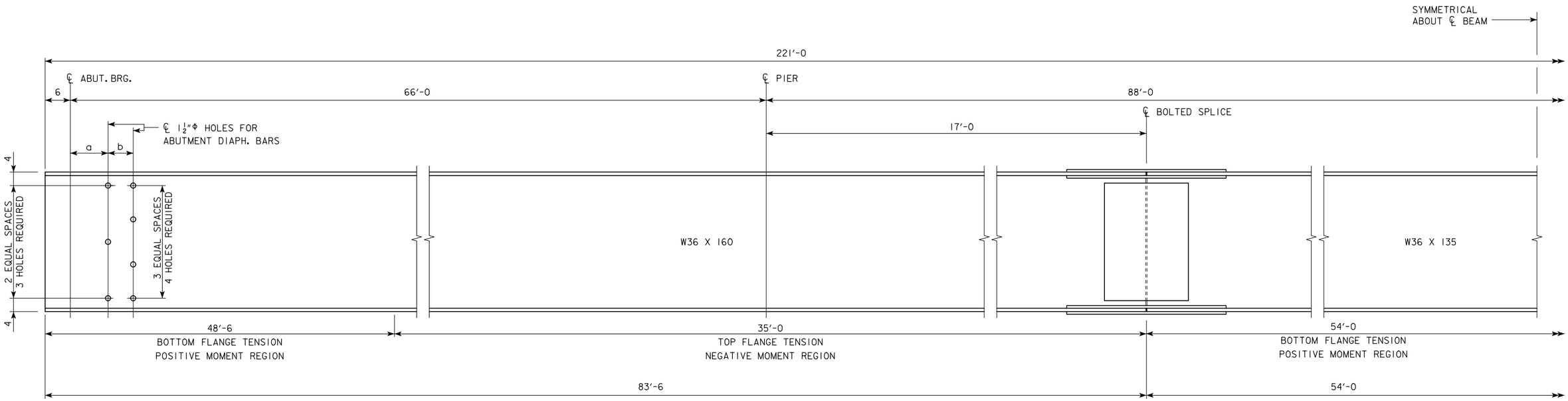

BEAM ELEVATION

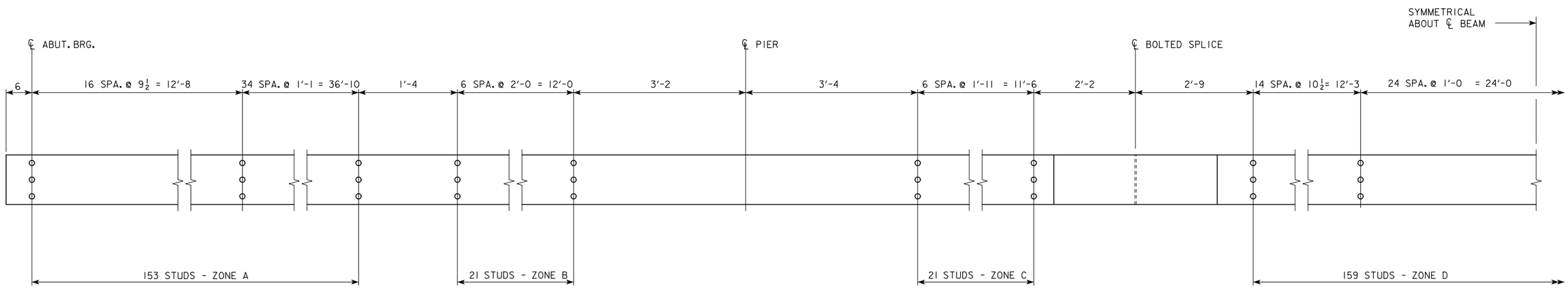

SHEAR STUD SPACING

* NOTE: STUD HEIGHTS (3½", 4" OR 5") FOR THE LOCATIONS SHOWN SHALL BE DETERMINED BY THE DESIGNER. ON "MISCELLANEOUS DETAILS 160'-0 BRIDGE" SHEET, STUD HEIGHTS CAN BE IDENTIFIED BY THE DESIGNER IN A TABLE CORRESPONDING TO THE ZONES LISTED ON THIS SHEET.

Δ WEIGHT OF SHEAR STUDS ARE NOT INCLUDED, SEE MISC. DETAILS - STANDARDS 5252 TO 5261.

STRUCTURAL STEEL
Δ BEAM WEIGHT
34,010 LBS.

NOTE: STRUCTURAL STEEL WEIGHT IS INCLUDED ON THE SUMMARY QUANTITIES SHEET.

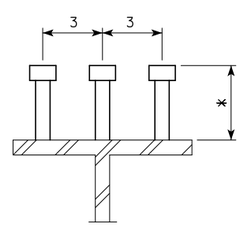

3 STUDS PER ROW

SHEAR STUD DETAILS

NOTE : ALL STUDS TO BE ⅞"Φ

SKEW	a (IN)	b (IN)
0°	9	6
10°	9⅛	6⅛
20°	9⅝	6⅜
30°	10⅜	6⅞
45°	12¾	8½

LATEST REVISION DATE

APPROVED BY BRIDGE ENGINEER

IOWA DOT Highway Division

STANDARD DESIGN - 40' ROADWAY, 3 SPAN BRIDGES

ROLLED STEEL BEAM BRIDGES

OCTOBER, 2014

BEAM PLAN AND ELEVATION 220'-0 BRIDGE

RS40-074-14

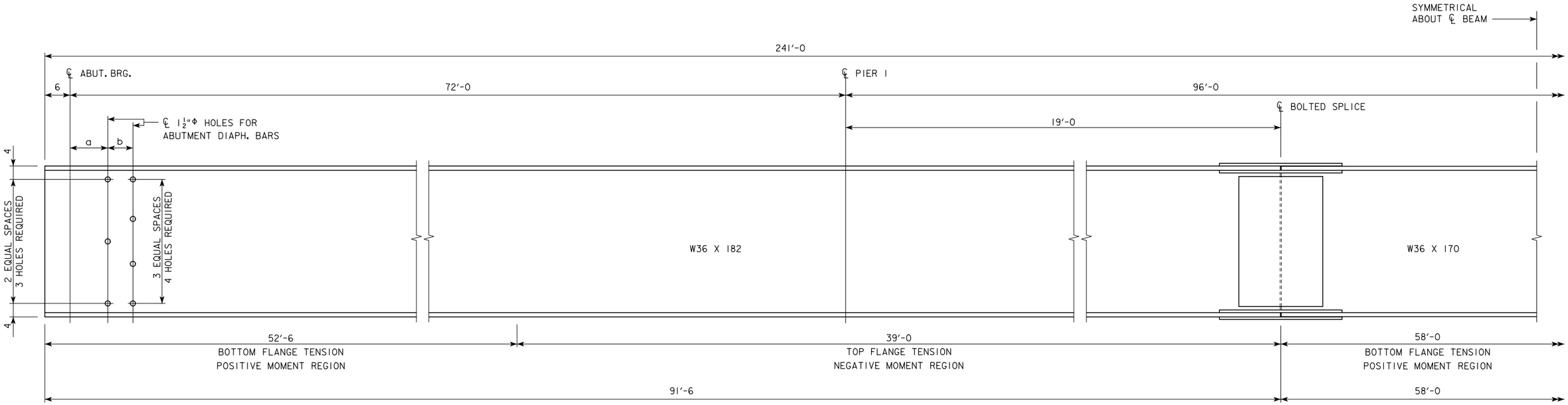

BEAM ELEVATION

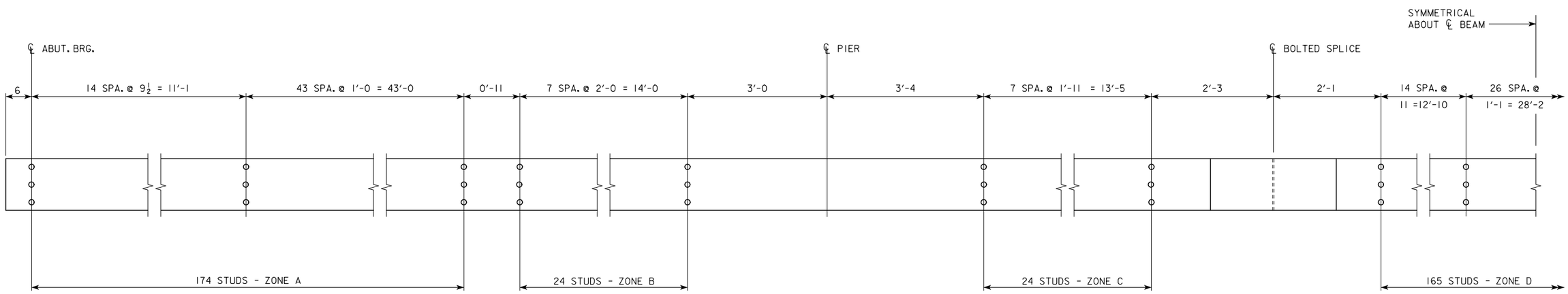

SHEAR STUD SPACING

* NOTE: STUD HEIGHTS (3½", 4" OR 5") FOR THE LOCATIONS SHOWN SHALL BE DETERMINED BY THE DESIGNER. ON "MISCELLANEOUS DETAILS 160'-0 BRIDGE" SHEET, STUD HEIGHTS CAN BE IDENTIFIED BY THE DESIGNER IN A TABLE CORRESPONDING TO THE ZONES LISTED ON THIS SHEET.

Δ WEIGHT OF SHEAR STUDS ARE NOT INCLUDED, SEE MISC. DETAILS - STANDARDS 5252 TO 5261.

STRUCTURAL STEEL
Δ BEAM WEIGHT
43,166 LBS.

NOTE: STRUCTURAL STEEL WEIGHT IS INCLUDED ON THE SUMMARY QUANTITIES SHEET.

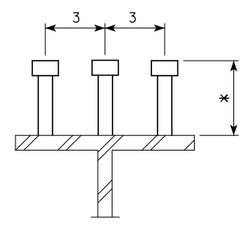

3 STUDS PER ROW

SHEAR STUD DETAILS

NOTE : ALL STUDS TO BE ⅞"Φ

SKEW	a (IN)	b (IN)
0°	9	6
10°	9⅛	6⅛
20°	9⅝	6⅜
30°	10⅜	6⅞
45°	12¾	8½

LATEST REVISION DATE

APPROVED BY BRIDGE ENGINEER

IOWA DOT Highway Division

STANDARD DESIGN - 40' ROADWAY, 3 SPAN BRIDGES

ROLLED STEEL BEAM BRIDGES

OCTOBER, 2014

BEAM PLAN AND ELEVATION 240'-0 BRIDGE

RS40-075-14

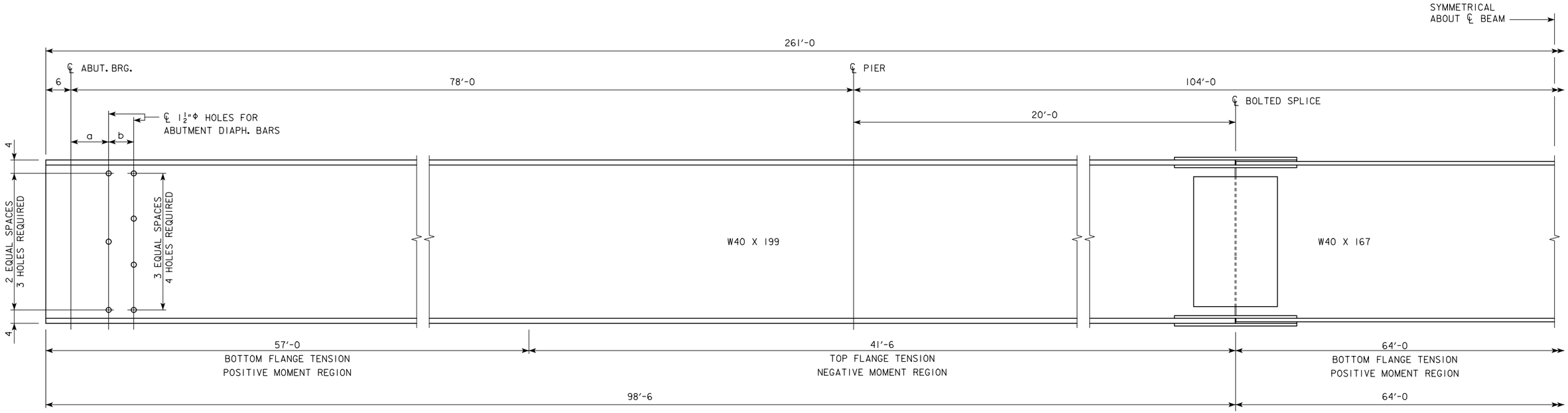

BEAM ELEVATION

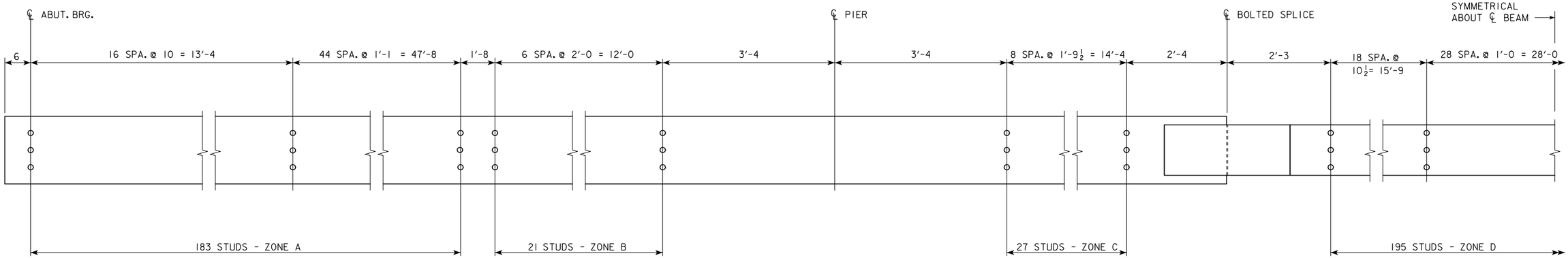

SHEAR STUD SPACING

* NOTE: STUD HEIGHTS (3½", 4" OR 5") FOR THE LOCATIONS SHOWN SHALL BE DETERMINED BY THE DESIGNER. ON "MISCELLANEOUS DETAILS 160'-0 BRIDGE" SHEET, STUD HEIGHTS CAN BE IDENTIFIED BY THE DESIGNER IN A TABLE CORRESPONDING TO THE ZONES LISTED ON THIS SHEET.

Δ WEIGHT OF SHEAR STUDS ARE NOT INCLUDED, SEE MISC. DETAILS - STANDARDS 5252 TO 5261.

STRUCTURAL STEEL
Δ BEAM WEIGHT
49,891 LBS.

NOTE: STRUCTURAL STEEL WEIGHT IS INCLUDED ON THE SUMMARY QUANTITIES SHEET.

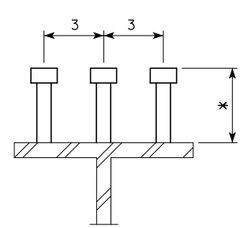

3 STUDS PER ROW

SHEAR STUD DETAILS

NOTE : ALL STUDS TO BE ⅞"Φ

SKEW	a (IN)	b (IN)
0°	9	6
10°	9⅛	6⅛
20°	9⅝	6⅜
30°	10⅜	6⅞
45°	12¾	8½

LATEST REVISION DATE

APPROVED BY BRIDGE ENGINEER

IOWADOT Highway Division

STANDARD DESIGN - 40' ROADWAY, 3 SPAN BRIDGES

ROLLED STEEL BEAM BRIDGES

OCTOBER, 2014

BEAM PLAN AND ELEVATION 260'-0 BRIDGE

RS40-076-14

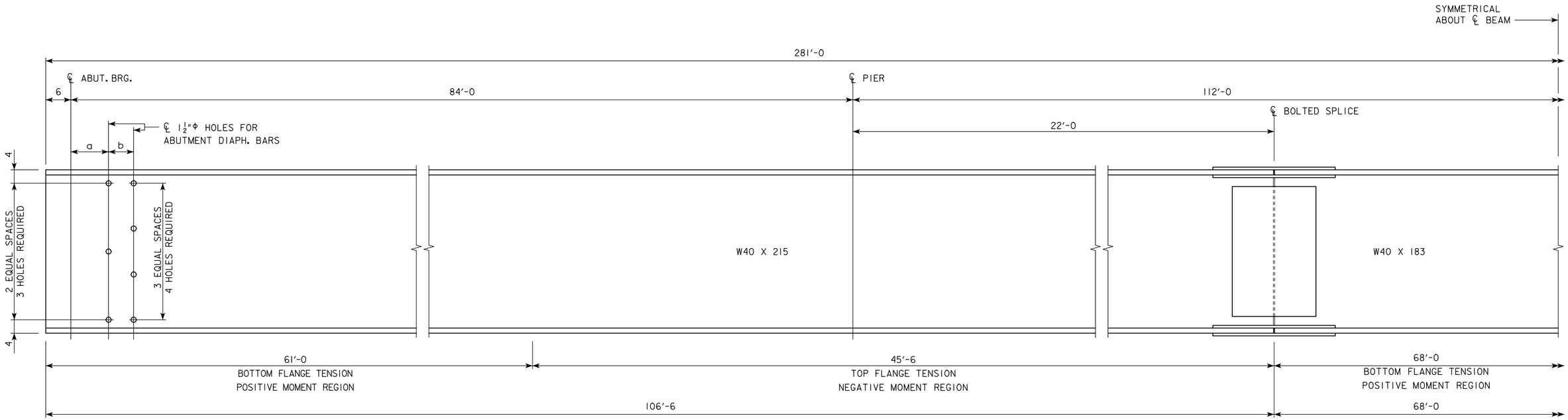

BEAM ELEVATION

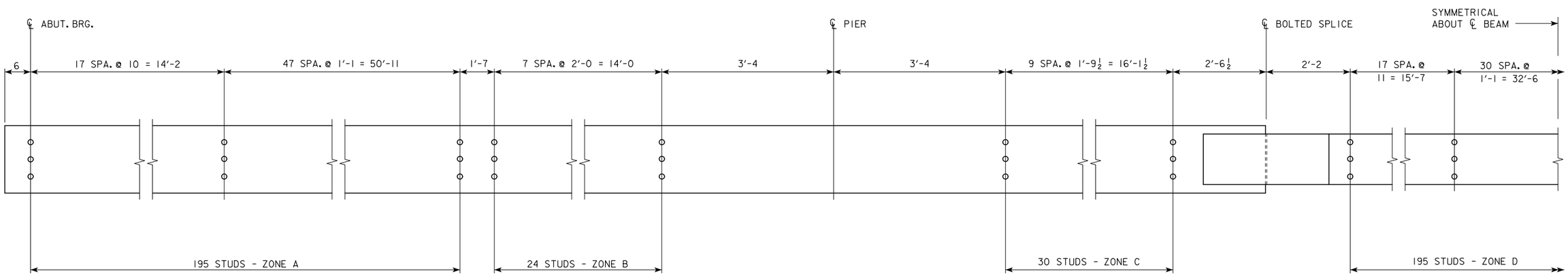

SHEAR STUD SPACING

* NOTE: STUD HEIGHTS (3½", 4" OR 5") FOR THE LOCATIONS SHOWN SHALL BE DETERMINED BY THE DESIGNER. ON "MISCELLANEOUS DETAILS 160'-0 BRIDGE" SHEET, STUD HEIGHTS CAN BE IDENTIFIED BY THE DESIGNER IN A TABLE CORRESPONDING TO THE ZONES LISTED ON THIS SHEET.

Δ WEIGHT OF SHEAR STUDS ARE NOT INCLUDED, SEE MISC. DETAILS - STANDARDS 5252 TO 5261.

STRUCTURAL STEEL
Δ BEAM WEIGHT
58,239 LBS.

NOTE: STRUCTURAL STEEL WEIGHT IS INCLUDED ON THE SUMMARY QUANTITIES SHEET.

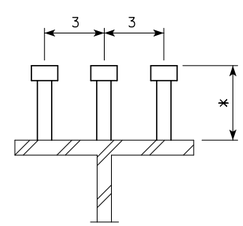

3 STUDS PER ROW

SHEAR STUD DETAILS

NOTE : ALL STUDS TO BE ⅞"Φ

SKEW	a (IN)	b (IN)
0°	9	6
10°	9⅛	6⅛
20°	9⅝	6⅜
30°	10⅜	6⅞
45°	12¾	8½

LATEST REVISION DATE

APPROVED BY BRIDGE ENGINEER

IOWADOT Highway Division

STANDARD DESIGN - 40' ROADWAY, 3 SPAN BRIDGES

ROLLED STEEL BEAM BRIDGES

OCTOBER, 2014

BEAM PLAN AND ELEVATION 280'-0 BRIDGE

RS40-077-14

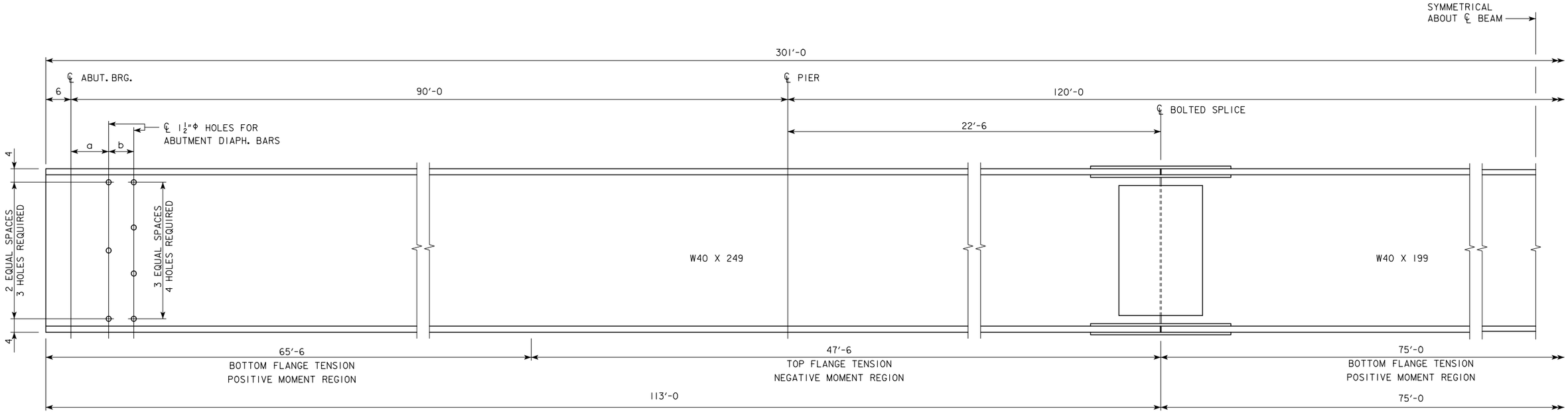

BEAM ELEVATION

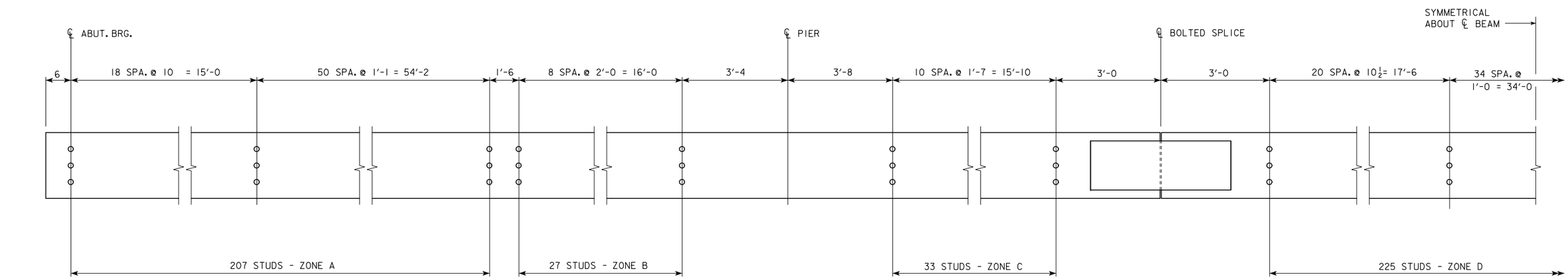

SHEAR STUD SPACING

* NOTE: STUD HEIGHTS (3½", 4" OR 5") FOR THE LOCATIONS SHOWN SHALL BE DETERMINED BY THE DESIGNER. ON "MISCELLANEOUS DETAILS 160'-0 BRIDGE" SHEET, STUD HEIGHTS CAN BE IDENTIFIED BY THE DESIGNER IN A TABLE CORRESPONDING TO THE ZONES LISTED ON THIS SHEET.

Δ WEIGHT OF SHEAR STUDS ARE NOT INCLUDED, SEE MISC. DETAILS - STANDARDS 5252 TO 5261.

STRUCTURAL STEEL
Δ BEAM WEIGHT
71,199 LBS.

NOTE: STRUCTURAL STEEL WEIGHT IS INCLUDED ON THE SUMMARY QUANTITIES SHEET.

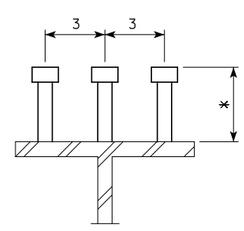

3 STUDS PER ROW

SHEAR STUD DETAILS

NOTE : ALL STUDS TO BE ⅞"Φ

SKEW	a (IN)	b (IN)
0°	9	6
10°	9⅛	6⅛
20°	9⅝	6⅜
30°	10⅜	6⅞
45°	12¾	8½

LATEST REVISION DATE

APPROVED BY BRIDGE ENGINEER

IOWA DOT Highway Division

STANDARD DESIGN - 40' ROADWAY, 3 SPAN BRIDGES

ROLLED STEEL BEAM BRIDGES

OCTOBER, 2014

BEAM PLAN AND ELEVATION 300'-0 BRIDGE

RS40-078-14

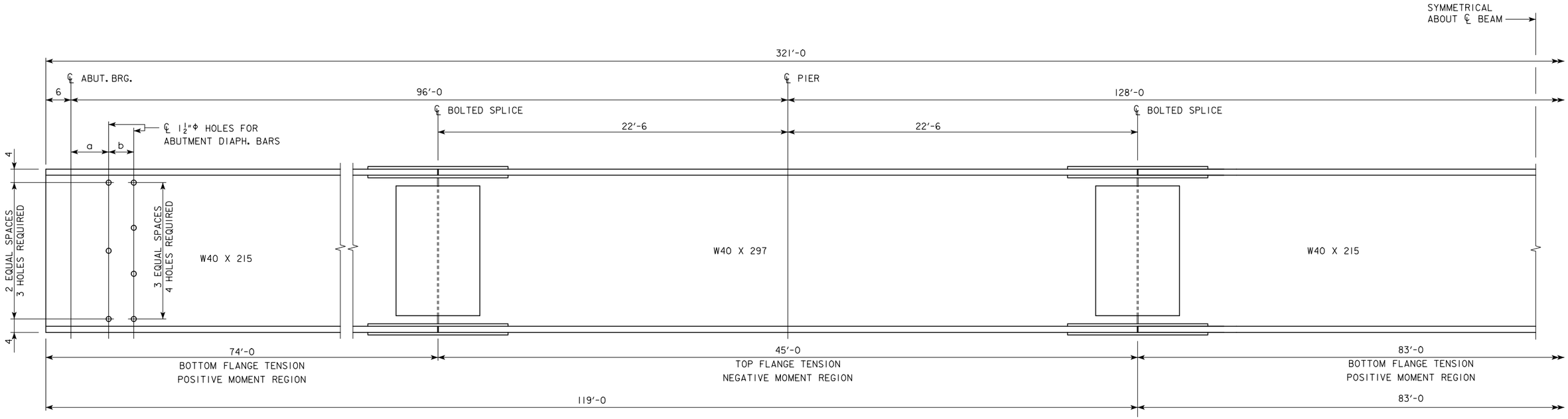

BEAM ELEVATION

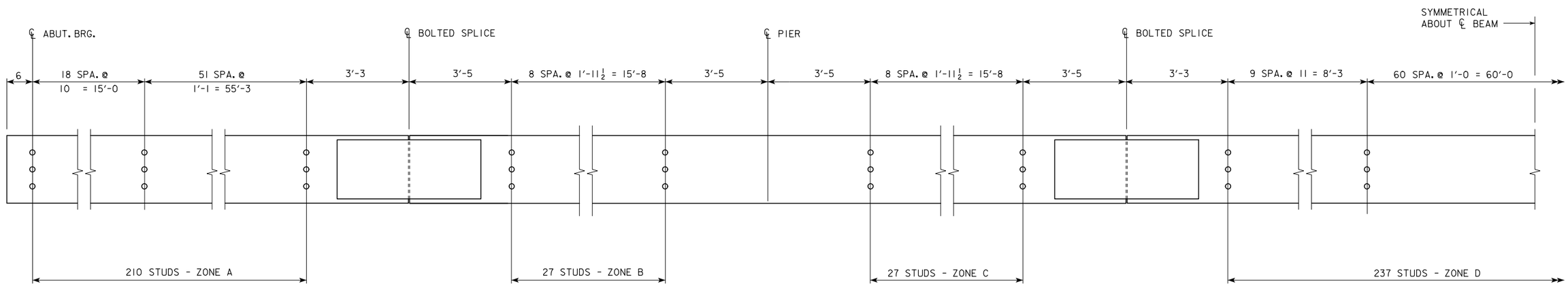

SHEAR STUD SPACING

* NOTE: STUD HEIGHTS (3½", 4" OR 5") FOR THE LOCATIONS SHOWN SHALL BE DETERMINED BY THE DESIGNER. ON "MISCELLANEOUS DETAILS 160'-0 BRIDGE" SHEET, STUD HEIGHTS CAN BE IDENTIFIED BY THE DESIGNER IN A TABLE CORRESPONDING TO THE ZONES LISTED ON THIS SHEET.

Δ WEIGHT OF SHEAR STUDS ARE NOT INCLUDED, SEE MISC. DETAILS - STANDARDS 5252 TO 5261.

STRUCTURAL STEEL
Δ BEAM WEIGHT
76,395 LBS.

NOTE: STRUCTURAL STEEL WEIGHT IS INCLUDED ON THE SUMMARY QUANTITIES SHEET.

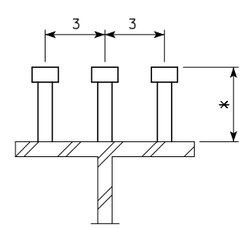

3 STUDS PER ROW

SHEAR STUD DETAILS

NOTE : ALL STUDS TO BE ⅞"Φ

SKEW	a (IN)	b (IN)
0°	9	6
10°	9⅛	6⅛
20°	9⅝	6⅜
30°	10⅜	6⅞
45°	12¾	8½

LATEST REVISION DATE

APPROVED BY BRIDGE ENGINEER

IOWA DOT Highway Division

STANDARD DESIGN - 40' ROADWAY, 3 SPAN BRIDGES

ROLLED STEEL BEAM BRIDGES

OCTOBER, 2014

BEAM PLAN AND ELEVATION 320'-0 BRIDGE

RS40-079-14

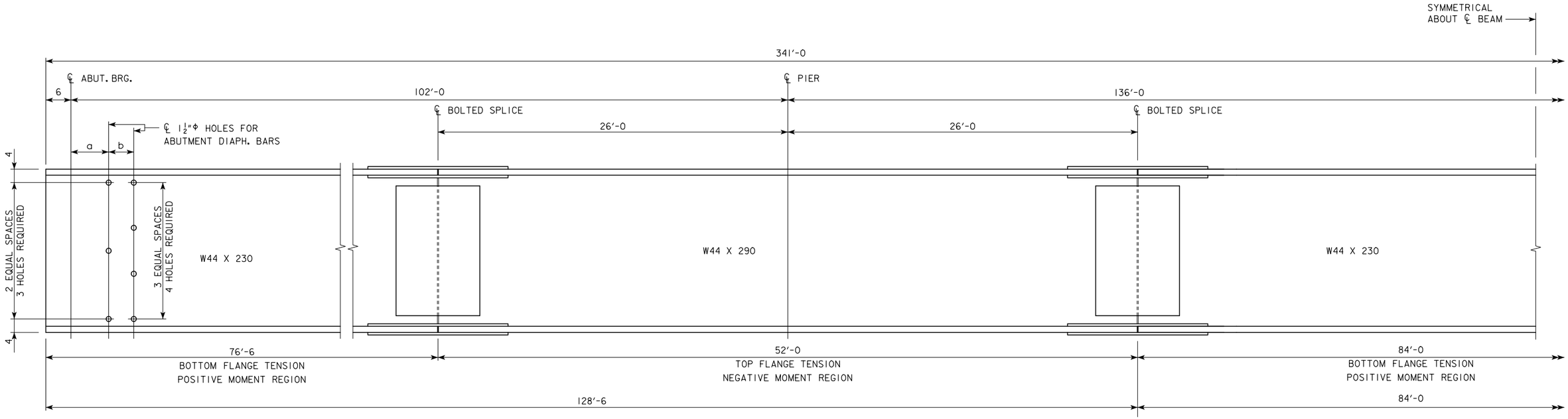

BEAM ELEVATION

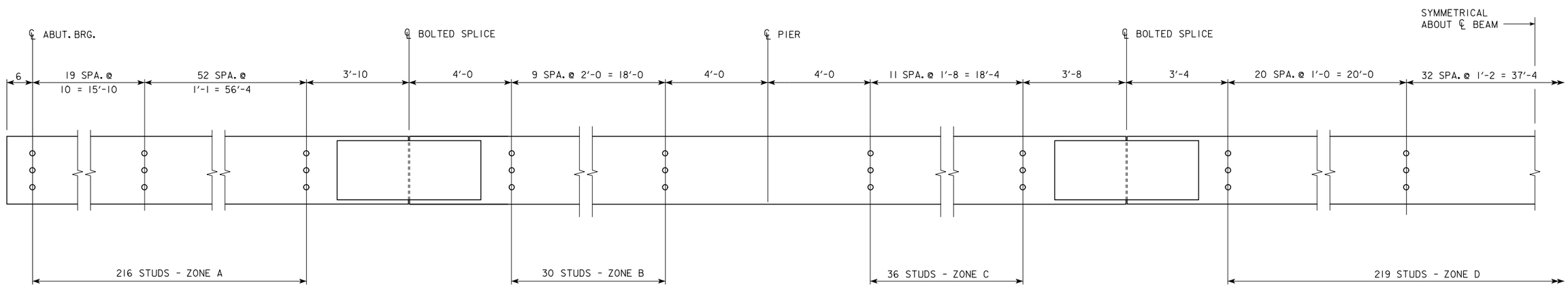

SHEAR STUD SPACING

* NOTE: STUD HEIGHTS (3½", 4" OR 5") FOR THE LOCATIONS SHOWN SHALL BE DETERMINED BY THE DESIGNER. ON "MISCELLANEOUS DETAILS 160'-0 BRIDGE" SHEET, STUD HEIGHTS CAN BE IDENTIFIED BY THE DESIGNER IN A TABLE CORRESPONDING TO THE ZONES LISTED ON THIS SHEET.

Δ WEIGHT OF SHEAR STUDS ARE NOT INCLUDED, SEE MISC. DETAILS - STANDARDS 5252 TO 5261.

STRUCTURAL STEEL
Δ BEAM WEIGHT
84,670 LBS.

NOTE: STRUCTURAL STEEL WEIGHT IS INCLUDED ON THE SUMMARY QUANTITIES SHEET.

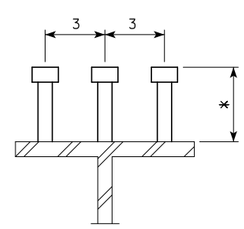

3 STUDS PER ROW

SHEAR STUD DETAILS

NOTE : ALL STUDS TO BE ⅞"Φ

SKEW	a (IN)	b (IN)
0°	9	6
10°	9⅛	6⅛
20°	9⅝	6⅜
30°	10⅜	6⅞
45°	12¾	8½

LATEST REVISION DATE

APPROVED BY BRIDGE ENGINEER

IOWA DOT Highway Division

STANDARD DESIGN - 40' ROADWAY, 3 SPAN BRIDGES

ROLLED STEEL BEAM BRIDGES

OCTOBER, 2014

BEAM PLAN AND ELEVATION 340'-0 BRIDGE

RS40-080-14

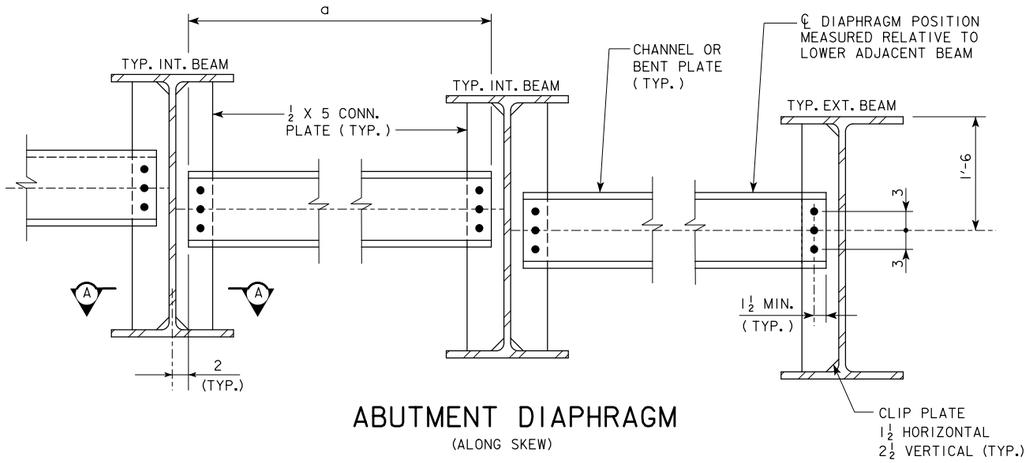

ABUTMENT DIAPHRAGM

(ALONG SKEW)

SKEW	a (FT-IN)
0°	7'-0¾
10°	7'-2 1/16
20°	7'-6 3/16
30°	8'-1⅞
45°	9'-11⅞

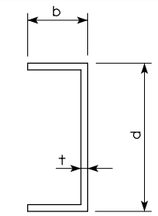

BENT PLATE DIAPHRAGM OPTION

DIAPHRAGM MEMBER OPTIONS

DIAPHRAGM LOCATION	BEAM SIZE	CHANNEL OPTION		BENT PLATE OPTION			
		DESIGNATION	CONN. BOLTS	d (IN)	b (IN)	t (IN)	CONN. BOLTS
INTERMEDIATE	W30 & W33	C15x33.9	3 -⅞"Φ	15	4	⅜	3 -⅞"Φ
INTERMEDIATE	W36, W40 & W44	MC18x42.7	3 -⅞"Φ	18	4	⅜	3 -⅞"Φ
ABUTMENT	ALL	C12x20.7	3 -⅞"Φ	12	4	⅜	3 -⅞"Φ
PIER	W30 & W33	C15x33.9	12 -⅞"Φ	15	4	⅜	12 -⅞"Φ
PIER	W36, W40 & W44	MC18x42.7	12 -⅞"Φ	18	4	⅜	12 -⅞"Φ

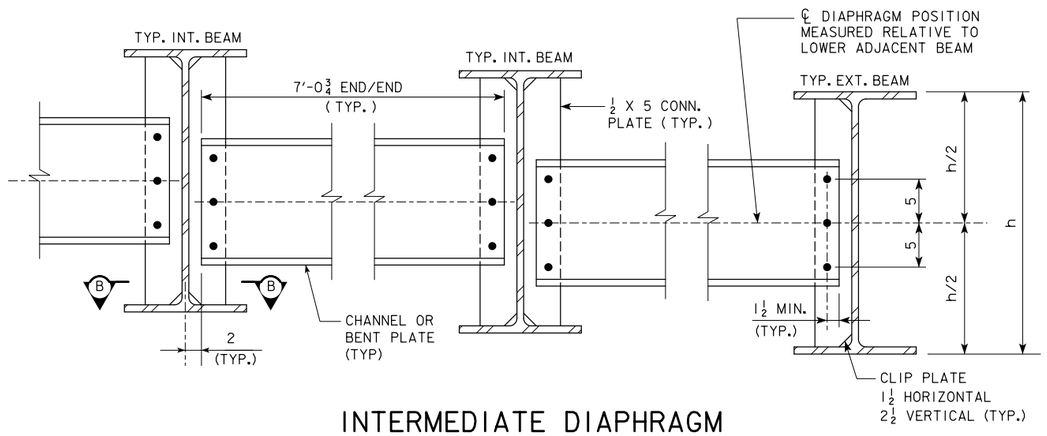

INTERMEDIATE DIAPHRAGM

(AT RIGHT ANGLES)

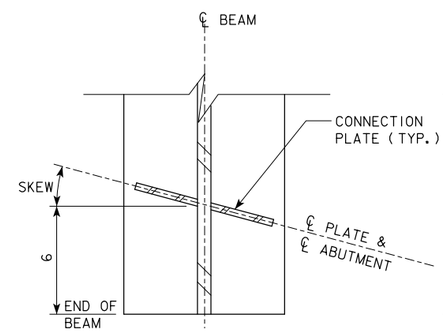

SECTION A-A

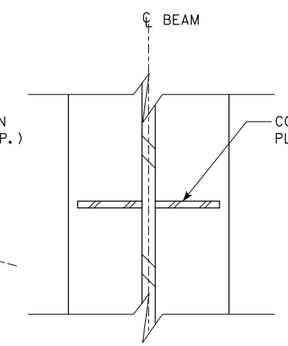

SECTION B-B

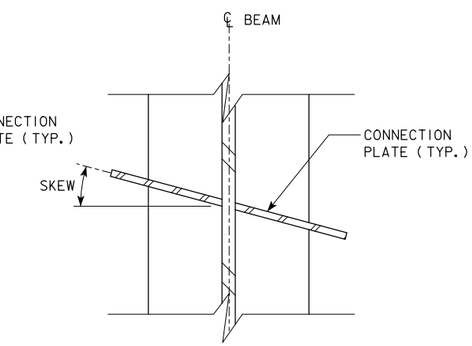

SECTION C-C

FOR 45° SKEW, CONNECTION PLATES ARE AT RIGHT ANGLES

NOTES:
1. EITHER CHANNEL OR BENT PLATE DIAPHRAGM OPTION MAY BE SELECTED AT CONTRACTOR'S OPTION.

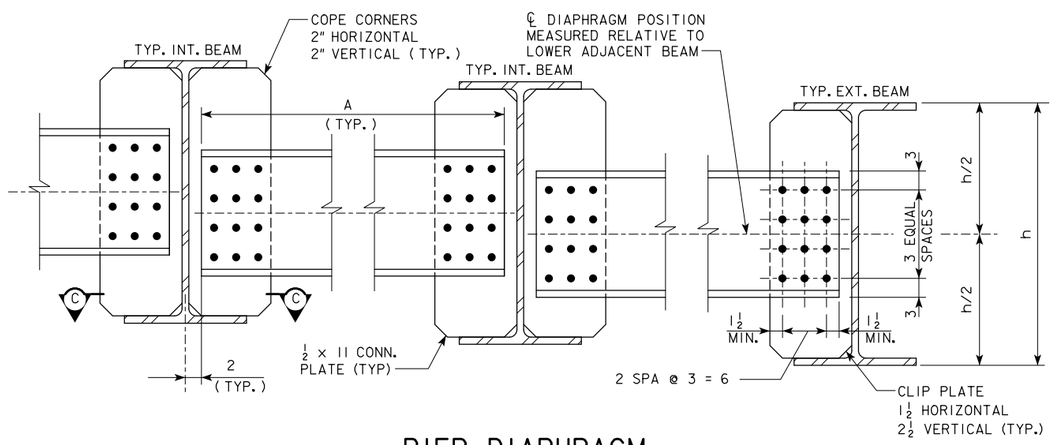

PIER DIAPHRAGM

(ALONG SKEW FOR 0°, 10°, 20° AND 30° SKEW)
(AT RIGHT ANGLES FOR 45° SKEW)

SKEW	A (FT-IN)
0°	7'-0¾
10°	7'-2 1/16
20°	7'-6 3/16
30°	8'-1⅞
45°	7'-0¾

LATEST REVISION DATE

APPROVED BY BRIDGE ENGINEER

IOWA DOT Highway Division

STANDARD DESIGN - 40' ROADWAY, 3 SPAN BRIDGES

ROLLED STEEL BEAM BRIDGES

OCTOBER, 2014

DIAPHRAGM DETAILS SHEET 1

RS40-081-14

0 SKEW DIAPHRAGM WEIGHTS

(WEIGHT IN LBS. INCLUDES DIAPHRAGM, NUTS, BOLTS, CONNECTION PLATES AND WELDS)

DIAPHRAGM	BRIDGE LENGTH									
	160'-0	180'-0	200'-0	220'-0	240'-0	260'-0	280'-0	300'-0	320'-0	340'-0
ROLLED CHANNEL	13,980	15,407	15,706	18,756	24,093	24,410	26,210	26,212	29,803	32,190
BENT PLATE	12,697	13,929	14,228	15,698	19,925	20,242	21,672	21,673	24,525	26,541

10 SKEW DIAPHRAGM WEIGHTS

(WEIGHT IN LBS. INCLUDES DIAPHRAGM, NUTS, BOLTS, CONNECTION PLATES AND WELDS)

DIAPHRAGM	BRIDGE LENGTH									
	160'-0	180'-0	200'-0	220'-0	240'-0	260'-0	280'-0	300'-0	320'-0	340'-0
ROLLED CHANNEL	14,040	15,467	15,765	18,825	24,163	24,480	26,280	26,281	29,872	32,259
BENT PLATE	12,755	13,987	14,286	15,760	19,988	20,304	21,734	21,736	24,587	26,604

20 SKEW DIAPHRAGM WEIGHTS

(WEIGHT IN LBS. INCLUDES DIAPHRAGM, NUTS, BOLTS, CONNECTION PLATES AND WELDS)

DIAPHRAGM	BRIDGE LENGTH									
	160'-0	180'-0	200'-0	220'-0	240'-0	260'-0	280'-0	300'-0	320'-0	340'-0
ROLLED CHANNEL	14,228	15,655	15,953	19,043	24,381	24,698	26,498	26,499	30,091	32,477
BENT PLATE	12,937	14,170	14,468	15,956	20,183	20,500	21,930	21,931	24,783	26,799

30 SKEW DIAPHRAGM WEIGHTS

(WEIGHT IN LBS. INCLUDES DIAPHRAGM, NUTS, BOLTS, CONNECTION PLATES AND WELDS)

DIAPHRAGM	BRIDGE LENGTH									
	160'-0	180'-0	200'-0	220'-0	240'-0	260'-0	280'-0	300'-0	320'-0	340'-0
ROLLED CHANNEL	14,578	16,005	16,304	19,450	24,784	25,105	26,905	26,906	30,493	32,884
BENT PLATE	13,277	14,509	14,808	16,320	20,544	20,865	22,294	22,296	25,142	27,164

45 SKEW DIAPHRAGM WEIGHTS

(WEIGHT IN LBS. INCLUDES DIAPHRAGM, NUTS, BOLTS, CONNECTION PLATES AND WELDS)

DIAPHRAGM	BRIDGE LENGTH									
	160'-0	180'-0	200'-0	220'-0	240'-0	260'-0	280'-0	300'-0	320'-0	340'-0
ROLLED CHANNEL	15,284	16,711	17,029	20,220	23,778	27,690	27,691	31,291	33,083	33,696
BENT PLATE	14,036	15,269	15,587	17,127	19,945	23,117	23,118	25,978	27,399	28,012

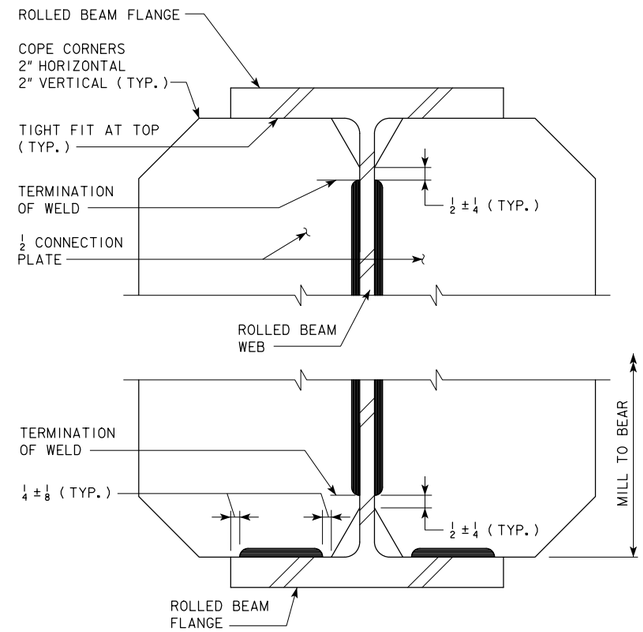

CONNECTION PLATE WELD TERMINATION DETAIL (PIER DIAPHRAGM, 0° to 30° SKEW)

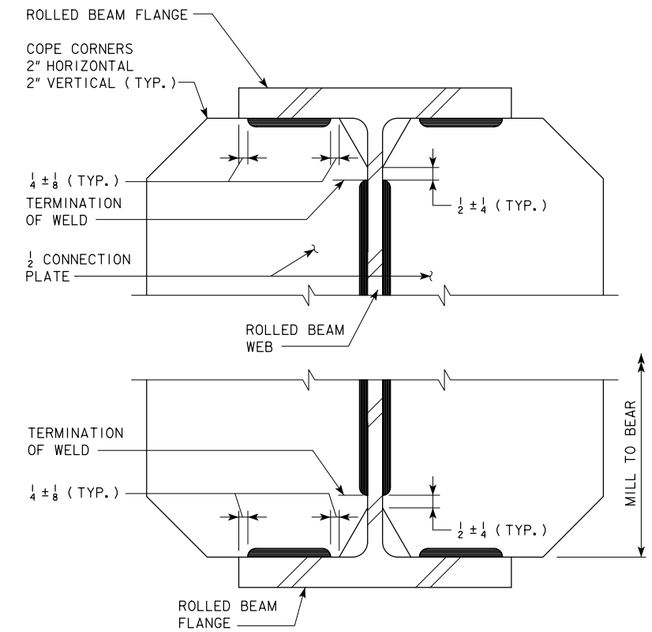

CONNECTION PLATE WELD TERMINATION DETAIL (PIER DIAPHRAGM, 45° SKEW)

NOTE: THE STRUCTURAL STEEL QUANTITY REQUIRED FOR THE APPROPRIATE BRIDGE LENGTH AND SKEW ARE TO BE INCLUDED ON THE SUMMARY QUANTITIES SHEET IN THE BRIDGE PLAN.

THE BENT PLATE OPTION SHOULD BE SHOWN ON THE SUMMARY QUANTITIES SHEET.

THE CONTRACTOR MAY CHOOSE TO PROVIDE ROLLED CHANNEL DIAPHRAGMS AT NO ADDITIONAL COST.

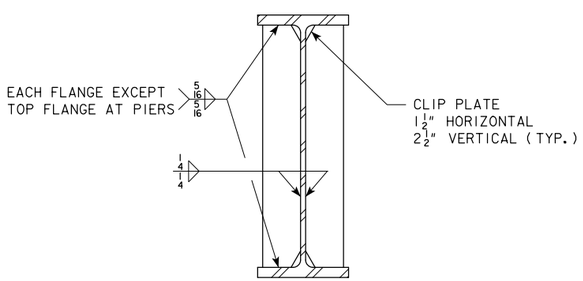

CONNECTION PLATE DETAIL

NOTE:
EXTERIOR BEAMS REQUIRE A CONNECTION PLATE ON THE INTERIOR SIDE OF THE WEB ONLY.

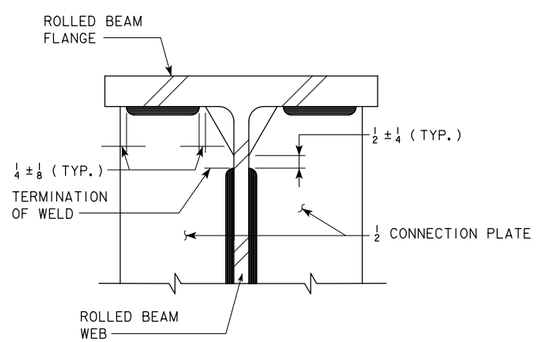

CONNECTION PLATE WELD TERMINATION DETAIL (ABUTMENT & INTERMEDIATE DIAPHRAGM)

LATEST REVISION DATE

APPROVED BY BRIDGE ENGINEER

IOWA DOT Highway Division

STANDARD DESIGN - 40' ROADWAY, 3 SPAN BRIDGES

ROLLED STEEL BEAM BRIDGES

OCTOBER, 2014

DIAPHRAGM DETAILS SHEET 2

RS40-082-14

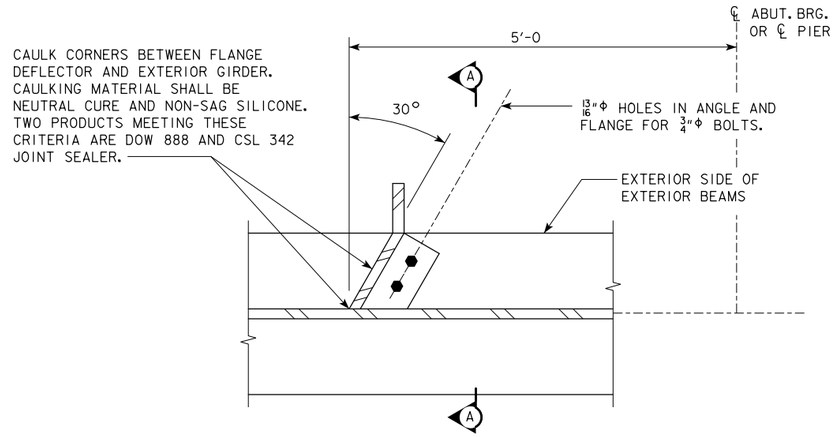

FLANGE DEFLECTOR DETAILS

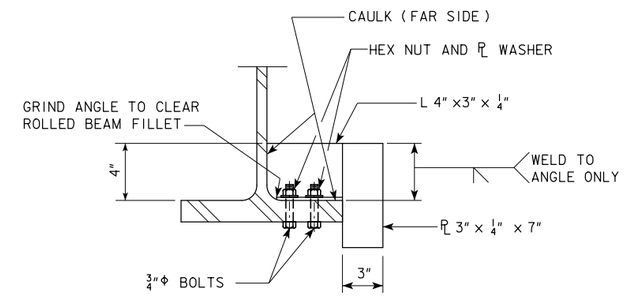

SECTION A-A

BRIDGE LENGTH	WEIGHT(lb.) PER FLANGE DEFLECTOR
160'-0	6.0
180'-0	6.0
200'-0	6.2
220'-0	6.4
240'-0	6.4
260'-0	7.5
280'-0	7.5
300'-0	7.5
320'-0	7.5
340'-0	7.6

INCLUDES WEIGHT OF PLATES, ANGLES, BOLTS, NUTS AND WASHERS.

NOTE: THE STRUCTURAL STEEL QUANTITY FOR THE FLANGE DEFLECTOR PLUS THE TOTAL NUMBER OF FLANGE DEFLECTORES REQUIRED IS TO BE INCLUDED ON THE SUMMARY QUANTITIES SHEET IN THE BRIDGE PLAN.

NOTES:

1. FLANGE DEFLECTORS ARE REQUIRED ON THE OUTSIDE OF THE EXTERIOR BEAM. LOCATION AND NUMBER OF FLANGE DEFLECTORS DETERMINED BY FINAL DESIGNER.

2. FLANGE DEFLECTOR LAYOUT IS SHOWN ON THE "GENERAL INFORMATION SHEET (WORKING STANDARD 5251) IN THE BRIDGE PLANS.

LATEST REVISION DATE

APPROVED BY BRIDGE ENGINEER

IOWA DOT Highway Division

STANDARD DESIGN - 40' ROADWAY, 3 SPAN BRIDGES

ROLLED STEEL BEAM BRIDGES

OCTOBER, 2014

FLANGE DEFLECTOR DETAILS

RS40-083-14

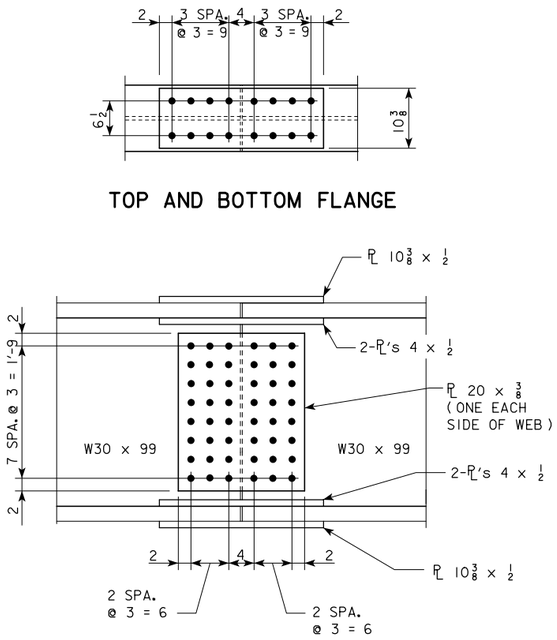

160' BEAM SPLICE

NOTE: ALL BOLTS 7/8"Φ

STRUCTURAL STEEL
ONE SPLICE
329 (LBS.)

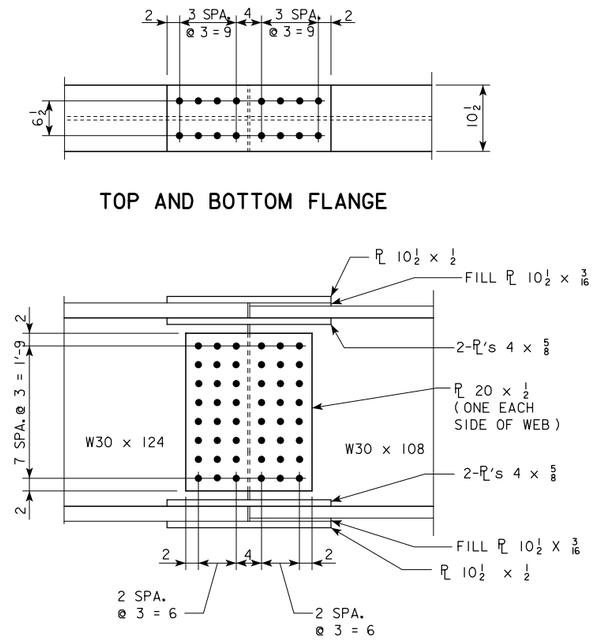

180' BEAM SPLICE

NOTE: ALL BOLTS 7/8"Φ

STRUCTURAL STEEL
ONE SPLICE
396 (LBS.)

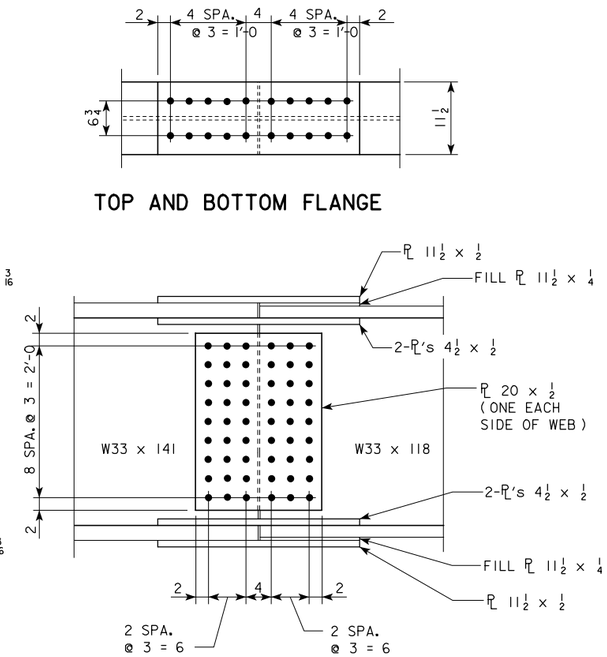

200' BEAM SPLICE

NOTE: ALL BOLTS 7/8"Φ

STRUCTURAL STEEL
ONE SPLICE
476 (LBS.)

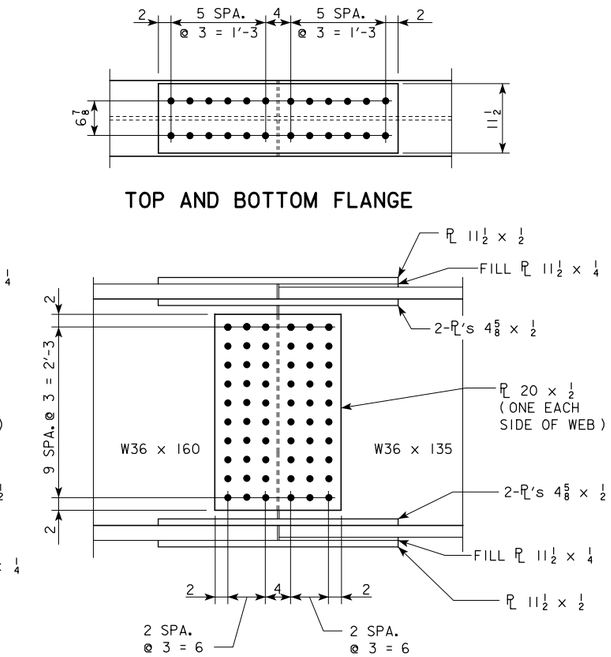

220' BEAM SPLICE

NOTE: ALL BOLTS 7/8"Φ

STRUCTURAL STEEL
ONE SPLICE
553 (LBS.)

NOTE: STRUCTURAL STEEL WEIGHT INCLUDES WEIGHT OF SPLICE PLATES, FILL PLATES, BOLTS, NUTS AND WASHERS.

NOTE: STRUCTURAL STEEL WEIGHT IS INCLUDED ON THE SUMMARY QUANTITIES SHEET.

LATEST REVISION DATE

APPROVED BY BRIDGE ENGINEER

IOWA DOT Highway Division

STANDARD DESIGN - 40' ROADWAY, 3 SPAN BRIDGES

ROLLED STEEL BEAM BRIDGES

OCTOBER, 2014

BOLTED FIELD SPLICE DETAILS SHEET 1

RS40-084-14

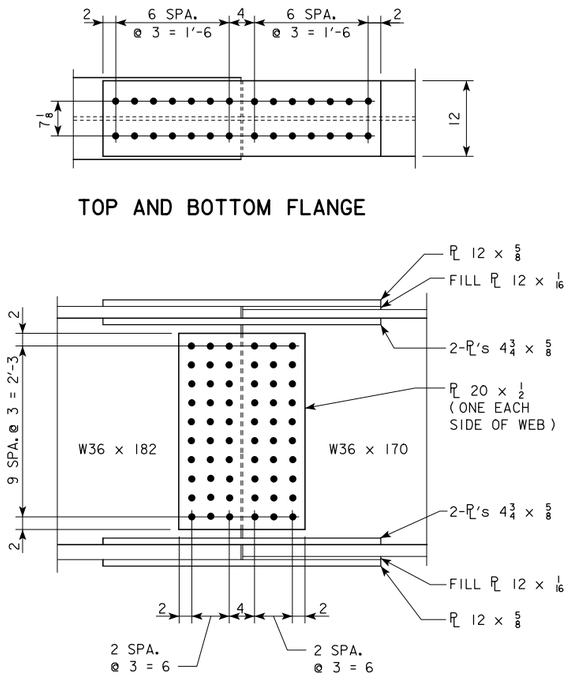

240' BEAM SPLICE

NOTE: ALL BOLTS 7/8"Φ

STRUCTURAL STEEL
ONE SPLICE
658 (LBS.)

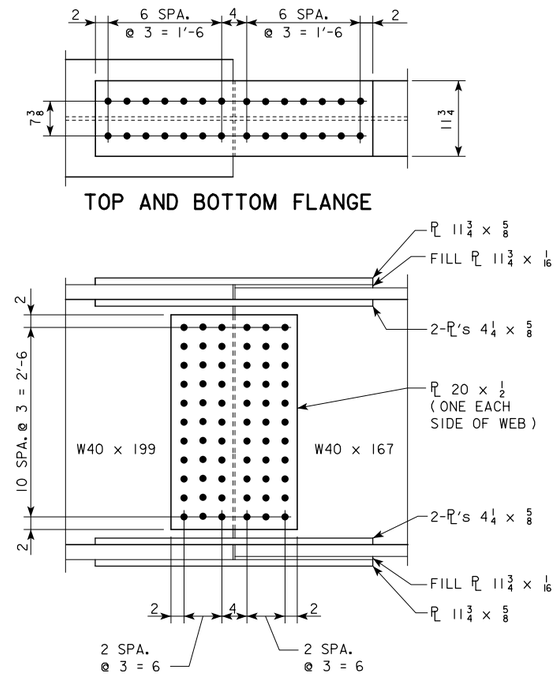

260' BEAM SPLICE

NOTE: ALL BOLTS 7/8"Φ

STRUCTURAL STEEL
ONE SPLICE
659 (LBS.)

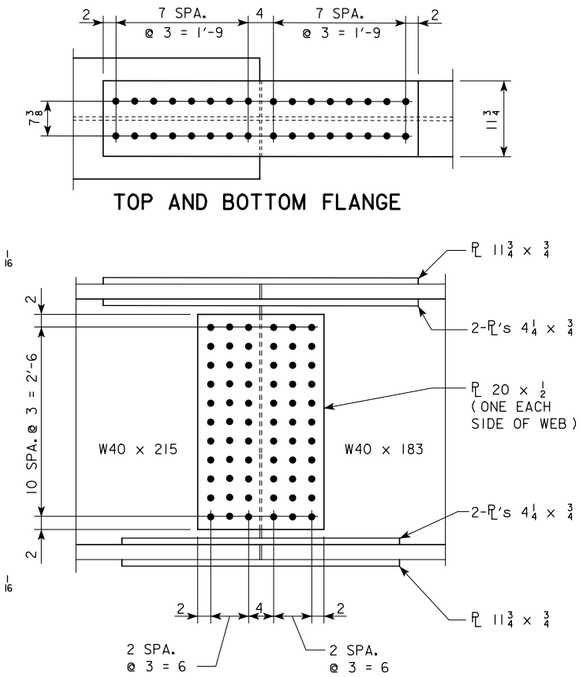

280' BEAM SPLICE

NOTE: ALL BOLTS 7/8"Φ

STRUCTURAL STEEL
ONE SPLICE
781 (LBS.)

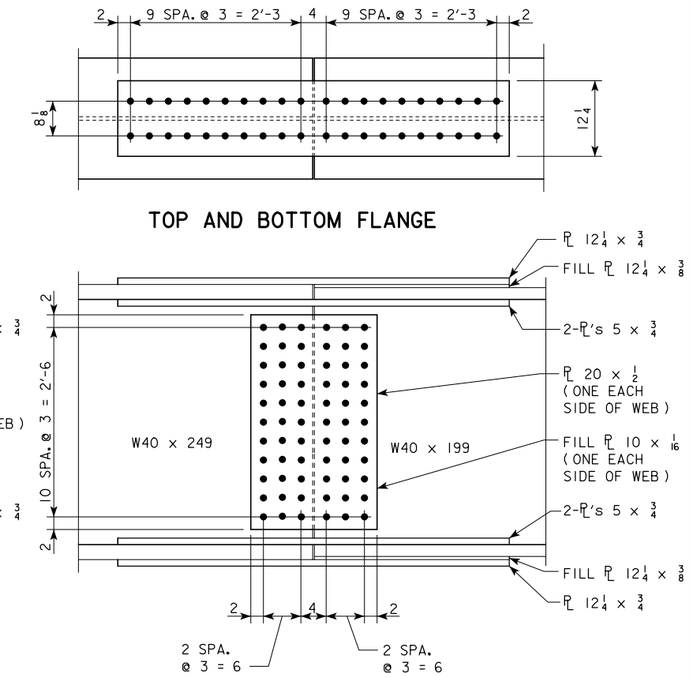

300' BEAM SPLICE

NOTE: ALL BOLTS 7/8"Φ

STRUCTURAL STEEL
ONE SPLICE
1,054 (LBS.)

NOTE: STRUCTURAL STEEL WEIGHT INCLUDES WEIGHT OF SPLICE PLATES, FILL PLATES, BOLTS, NUTS AND WASHERS.

NOTE: STRUCTURAL STEEL WEIGHT IS INCLUDED ON THE SUMMARY QUANTITIES SHEET.

LATEST REVISION DATE

APPROVED BY BRIDGE ENGINEER

IOWADOT Highway Division

STANDARD DESIGN - 40' ROADWAY, 3 SPAN BRIDGES

ROLLED STEEL BEAM BRIDGES

OCTOBER, 2014

BOLTED FIELD SPLICE DETAILS SHEET 2

RS40-085-14

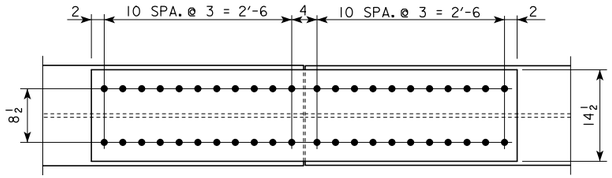

TOP AND BOTTOM FLANGE

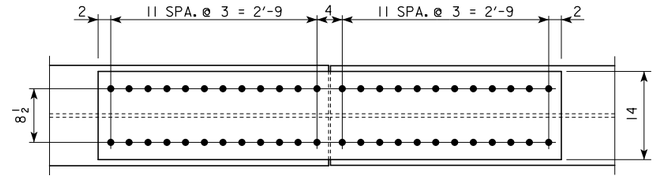

TOP AND BOTTOM FLANGE

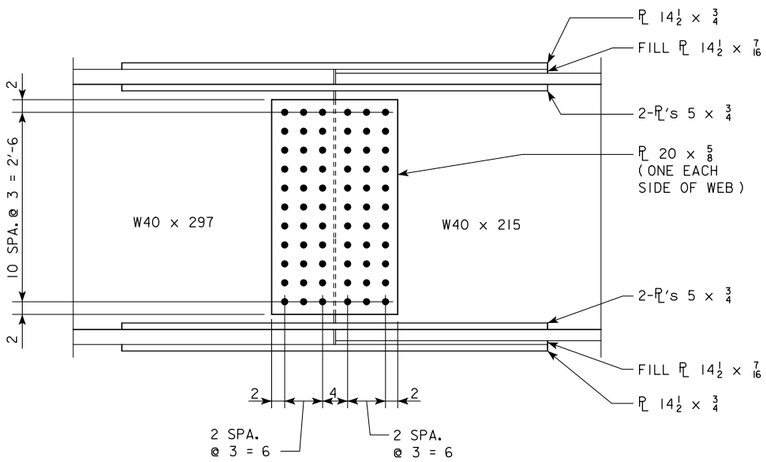

BOLTED SPLICE DETAILS

320' BEAM SPLICE

NOTE: ALL BOLTS 7/8"Φ

STRUCTURAL STEEL
ONE SPLICE
1,270 (LBS.)

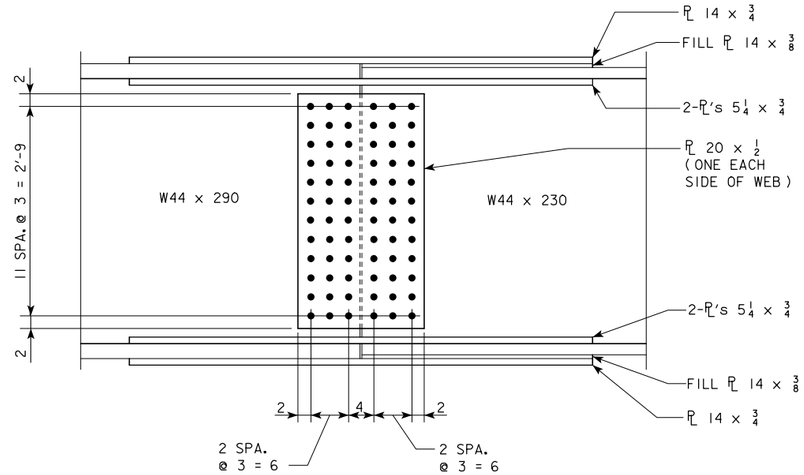

BOLTED SPLICE DETAILS

340' BEAM SPLICE

NOTE: ALL BOLTS 7/8"Φ

STRUCTURAL STEEL
ONE SPLICE
1,304 (LBS.)

NOTE: STRUCTURAL STEEL WEIGHT INCLUDES WEIGHT OF SPLICE PLATES, FILL PLATES, BOLTS, NUTS AND WASHERS.

NOTE: STRUCTURAL STEEL WEIGHT IS INCLUDED ON THE SUMMARY QUANTITIES SHEET.

LATEST REVISION DATE

APPROVED BY BRIDGE ENGINEER

IOWADOT Highway Division

STANDARD DESIGN - 40' ROADWAY, 3 SPAN BRIDGES

ROLLED STEEL BEAM BRIDGES

OCTOBER, 2014

BOLTED FIELD SPLICE DETAILS SHEET 3

RS40-086-14

TABLE OF BARRIER RAIL DIMENSIONS AND NUMBERS

BRIDGE LENGTH		160′-0					180′-0					200′-0					220′-0					240′-0					260′-0				
SKEW		0°	10°	20°	30°	45°	0°	10°	20°	30°	45°	0°	10°	20°	30°	45°	0°	10°	20°	30°	45°	0°	10°	20°	30°	45°	0°	10°	20°	30°	45°
DIMENSION OR NUMBER	A (FT-IN)	177′-0	177′-0 5/8	177′-2 1/4	177′-5 1/2	178′-2 7/8	197′-0	197′-0 5/8	197′-2 1/4	197′-5 1/2	198′-2 7/8	217′-0	217′-0 5/8	217′-2 1/4	217′-5 1/2	218′-2 7/8	237′-0	237′-0 5/8	237′-2 1/4	237′-5 1/2	238′-2 7/8	257′-0	257′-0 5/8	257′-2 1/4	257′-5 1/2	258′-2 7/8	277′-0	277′-0 5/8	277′-2 1/4	277′-5 1/2	278′-2 7/8
	B (FT-IN)	163′-0	163′-0 5/8	163′-2 1/4	163′-5 1/2	164′-2 7/8	183′-0	183′-0 5/8	183′-2 1/4	183′-5 1/2	184′-2 7/8	203′-0	203′-0 5/8	203′-2 1/4	203′-5 1/2	204′-2 7/8	223′-0	223′-0 5/8	223′-2 1/4	223′-5 1/2	224′-2 7/8	243′-0	243′-0 5/8	243′-2 1/4	243′-5 1/2	244′-2 7/8	263′-0	263′-0 5/8	263′-2 1/4	263′-5 1/2	264′-2 7/8
	C	162	162	162	162	163	182	182	182	182	183	202	202	202	202	203	222	222	222	222	223	242	242	242	242	243	262	262	262	262	263
	D (FT-IN)	162′-0	162′-0	162′-0	162′-0	163′-0	182′-0	182′-0	182′-0	182′-0	183′-0	202′-0	202′-0	202′-0	202′-0	203′-0	222′-0	222′-0	222′-0	222′-0	223′-0	242′-0	242′-0	242′-0	242′-0	243′-0	262′-0	262′-0	262′-0	262′-0	263′-0
	E	163	163	163	163	164	183	183	183	183	184	203	203	203	203	204	223	223	223	223	224	243	243	243	243	244	263	263	263	263	264
	F (IN)	6	6 5/16	7 1/8	8 3/4	7 7/16	6	6 5/16	7 1/8	8 3/4	7 7/16	6	6 5/16	7 1/8	8 3/4	7 7/16	6	6 5/16	7 1/8	8 3/4	7 7/16	6	6 5/16	7 1/8	8 3/4	7 7/16	6	6 5/16	7 1/8	8 3/4	7 7/16

TABLE OF BARRIER RAIL DIMENSIONS AND NUMBERS - CONT.

BRIDGE LENGTH		280′-0					300′-0					320′-0				
SKEW		0°	10°	20°	30°	45°	0°	10°	20°	30°	45°	0°	10°	20°	30°	45°
DIMENSION OR NUMBER	A (FT-IN)	297′-0	297′-0 5/8	297′-2 1/4	297′-5 1/2	298′-2 7/8	317′-0	317′-0 5/8	317′-2 1/4	317′-5 1/2	318′-2 7/8	337′-0	337′-0 5/8	337′-2 1/4	337′-5 1/2	338′-2 7/8
	B (FT-IN)	283′-0	283′-0 5/8	283′-2 1/4	283′-5 1/2	284′-2 7/8	303′-0	303′-0 5/8	303′-2 1/4	303′-5 1/2	304′-2 7/8	323′-0	323′-0 5/8	323′-2 1/4	323′-5 1/2	324′-2 7/8
	C	282	282	282	282	283	302	302	302	302	303	322	322	322	322	323
	D (FT-IN)	282′-0	282′-0	282′-0	282′-0	283′-0	302′-0	302′-0	302′-0	302′-0	303′-0	322′-0	322′-0	322′-0	322′-0	323′-0
	E	283	283	283	283	284	303	303	303	303	304	323	323	323	323	324
	F (IN)	6	6 5/16	7 1/8	8 3/4	7 7/16	6	6 5/16	7 1/8	8 3/4	7 7/16	6	6 5/16	7 1/8	8 3/4	7 7/16

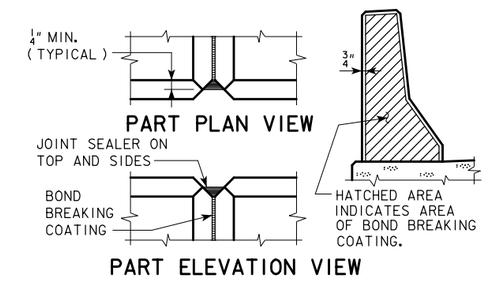

BARRIER RAIL JOINT DETAILS

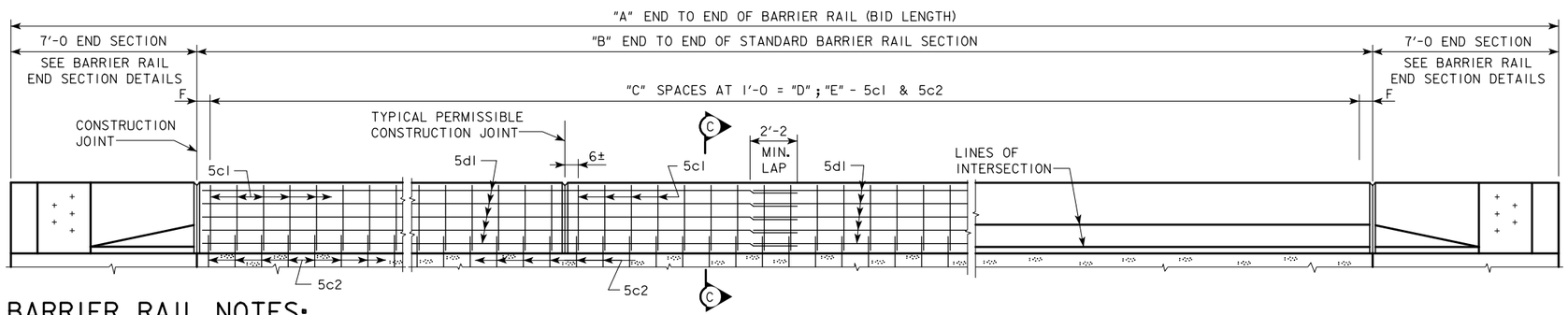

ELEVATION OF BARRIER RAIL LAYOUT

BARRIER RAIL NOTES:

1. MINIMUM CLEAR DISTANCE FROM FACE OF CONCRETE TO NEAR REINFORCING BAR IS TO BE 2" UNLESS OTHERWISE NOTED OR SHOWN.

2. THE PERMISSIBLE CONSTRUCTION JOINTS ARE TO BE PLACED BETWEEN VERTICAL BARS AT A MINIMUM SPACING OF 20 FEET. CONSTRUCTION JOINT CONTACT SURFACES ARE TO BE COATED WITH AN APPROVED BOND BREAKER.

3. COST OF THE JOINT SEALER AND BOND BREAKER SHALL BE CONSIDERED INCIDENTAL TO OTHER CONSTRUCTION.

4. ALL BARRIER RAIL REINFORCING STEEL IS TO BE INCLUDED ON THE SUMMARY QUANTITIES SHEET IN THE PLAN.

   ALL BARRIER RAIL REINFORCING STEEL IS TO BE EITHER EPOXY COATED OR STAINLESS STEEL AS SHOWN OR NOTED. THE STAINLESS STEEL REINFORCING STEEL SHALL BE DEFORMED BAR GRADE 60 MEETING THE REQUIREMENTS OF MATERIALS I.M.452.

5. THE CONCRETE BARRIER RAIL IS TO BE BID ON A LINEAL FOOT BASIS. THE NUMBER OF LINEAL FEET OF BARRIER RAIL INSTALLED WILL BE PAID FOR AT THE CONTRACT PRICE PER LINEAL FOOT BASED ON PLAN QUANTITIES. PRICE BID FOR CONCRETE BARRIER RAILING SHALL BE FULL COMPENSATION FOR FURNISHING ALL MATERIAL, EXCLUDING REINFORCING STEEL, AND ALL OF THE EQUIPMENT AND LABOR REQUIRED TO ERECT THE RAIL IN ACCORDANCE WITH THESE PLANS AND CURRENT SPECIFICATIONS. IF CONDUIT IS REQUIRED IN THIS PLAN THE RIGID STEEL CONDUIT, JUNCTION BOXES AND FITTINGS INCLUDING LABOR AND ANY ADDITIONAL WORK TO DO THE INSTALLATION IS CONSIDERED INCIDENTAL TO THE COST OF THE RAILING.

BARRIER RAIL NOTES - CONT.:

6. THE JOINT SEALER SHALL BE LIGHT GRAY NONSAG LATEX CAULKING SEALER MARKETED FOR OUTDOOR USE. NO TESTING OR CERTIFICATION IS REQUIRED.

7. TOP OF THE BARRIER RAIL IS TO BE PARALLEL TO THE THEORETICAL ℄ GRADE.

8. CROSS SECTIONAL AREA OF THE STANDARD SECTION OF THE BARRIER RAIL = 2.84 SQUARE FEET.

9. CONCRETE BARRIER RAILS PLACED USING THE SLIPFORM METHOD WILL REQUIRE THE USE OF A CLASS BR CONCRETE IN ACCORDANCE WITH ARTICLE 2513.03A OF THE STANDARD SPECIFICATION. CAST-IN-PLACE BARRIER RAILS SHALL USE CLASS C MIX. CLASS D CONCRETE IS NOT PERMITTED FOR CONCRETE BARRIER RAILS (CAST-IN-PLACE OR SLIPFORMED METHOD).

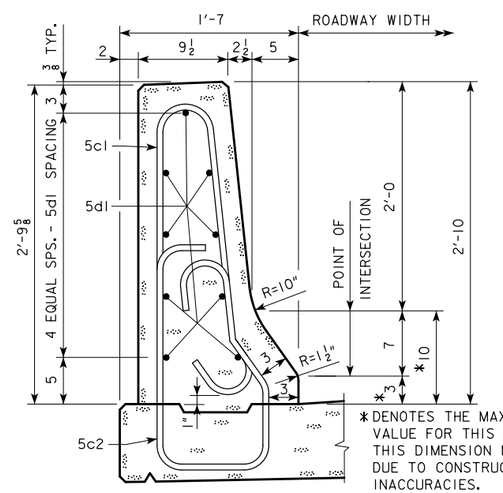

* DENOTES THE MAXIMUM VALUE FOR THIS DIMENSION. THIS DIMENSION MAY VARY DUE TO CONSTRUCTION INACCURACIES.

PART SECTION C-C

LATEST REVISION DATE

APPROVED BY BRIDGE ENGINEER

IOWA DOT Highway Division

STANDARD DESIGN - 40′ ROADWAY, 3 SPAN BRIDGES

ROLLED STEEL BEAM BRIDGES

OCTOBER, 2014

BARRIER RAIL DETAILS 160′ TO 320′ BRIDGES

RS40-087-14

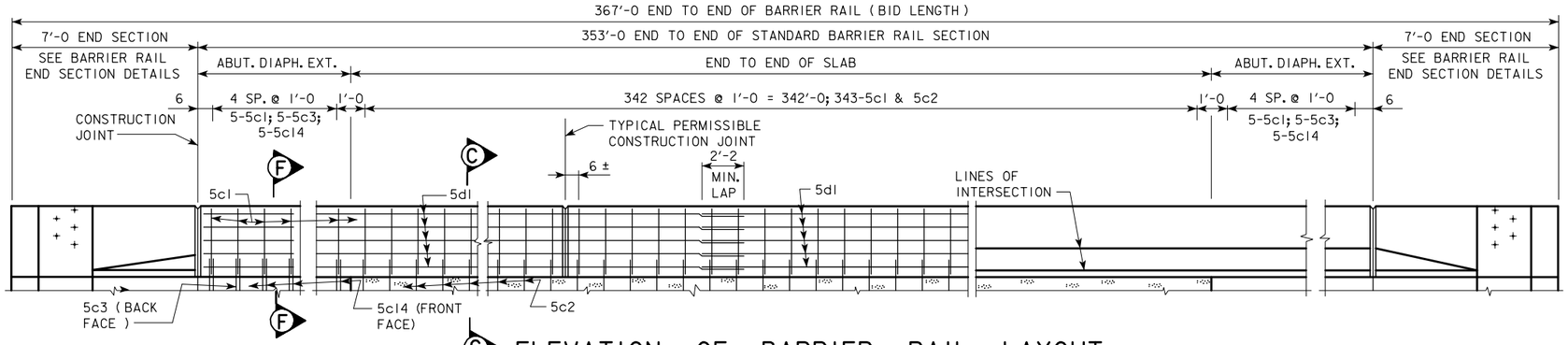

C ELEVATION OF BARRIER RAIL LAYOUT

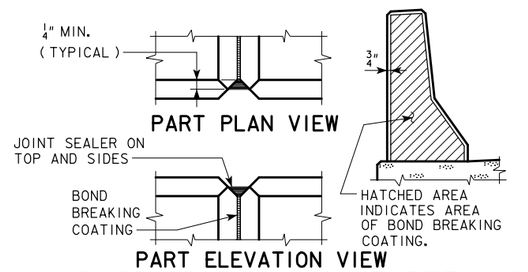

BARRIER RAIL JOINT DETAILS

BARRIER RAIL NOTES:

1. MINIMUM CLEAR DISTANCE FROM FACE OF CONCRETE TO NEAR REINFORCING BAR IS TO BE 2" UNLESS OTHERWISE NOTED OR SHOWN.

2. THE PERMISSIBLE CONSTRUCTION JOINTS ARE TO BE PLACED BETWEEN VERTICAL BARS AT A MINIMUM SPACING OF 20 FEET. CONSTRUCTION JOINT CONTACT SURFACES ARE TO BE COATED WITH AN APPROVED BOND BREAKER.

3. COST OF THE JOINT SEALER AND BOND BREAKER SHALL BE CONSIDERED INCIDENTAL TO OTHER CONSTRUCTION.

4. ALL BARRIER RAIL REINFORCING STEEL IS TO BE INCLUDED ON THE SUMMARY QUANTITIES SHEET IN THE PLAN.

   ALL BARRIER RAIL REINFORCING STEEL IS TO BE EITHER EPOXY COATED OR STAINLESS STEEL AS SHOWN OR NOTED. THE STAINLESS STEEL REINFORCING STEEL SHALL BE DEFORMED BAR GRADE 60 MEETING THE REQUIREMENTS OF MATERIALS I.M.452.

5. THE CONCRETE BARRIER RAIL IS TO BE BID ON A LINEAL FOOT BASIS. THE NUMBER OF LINEAL FEET OF BARRIER RAIL INSTALLED WILL BE PAID FOR AT THE CONTRACT PRICE PER LINEAL FOOT BASED ON PLAN QUANTITIES. PRICE BID FOR CONCRETE BARRIER RAILING SHALL BE FULL COMPENSATION FOR FURNISHING ALL MATERIAL, EXCLUDING REINFORCING STEEL, AND ALL OF THE EQUIPMENT AND LABOR REQUIRED TO ERECT THE RAIL IN ACCORDANCE WITH THESE PLANS AND CURRENT SPECIFICATIONS. IF CONDUIT IS REQUIRED IN THIS PLAN THE RIGID STEEL CONDUIT, JUNCTION BOXES AND FITTINGS INCLUDING LABOR AND ANY ADDITIONAL WORK TO DO THE INSTALLATION IS CONSIDERED INCIDENTAL TO THE COST OF THE RAILING.

6. THE JOINT SEALER SHALL BE LIGHT GRAY NONSAG LATEX CAULKING SEALER MARKETED FOR OUTDOOR USE. NO TESTING OR CERTIFICATION IS REQUIRED.

7. TOP OF THE BARRIER RAIL IS TO BE PARALLEL TO THE THEORETICAL ℄ GRADE.

8. CROSS SECTIONAL AREA OF THE STANDARD SECTION OF THE BARRIER RAIL = 2.84 SQUARE FEET.

9. CONCRETE BARRIER RAILS PLACED USING THE SLIPFORM METHOD WILL REQUIRE THE USE OF A CLASS BR CONCRETE IN ACCORDANCE WITH ARTICLE 2513.03A OF THE STANDARD SPECIFICATIONS. CAST-IN-PLACE BARRIER RAILS SHALL USE CLASS C MIX. CLASS D CONCRETE IS NOT PERMITTED FOR CONCRETE BARRIER RAILS (CAST-IN-PLACE OR SLIPFORMED METHODS).

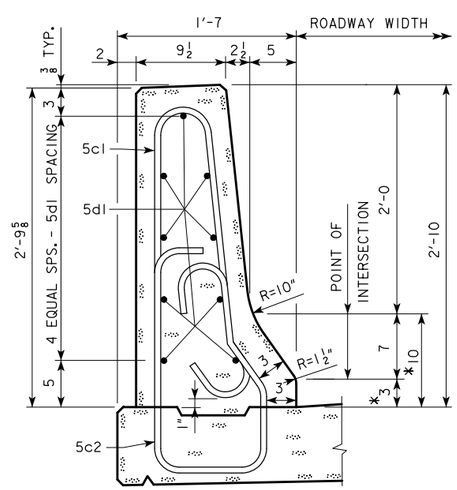

PART SECTION C-C

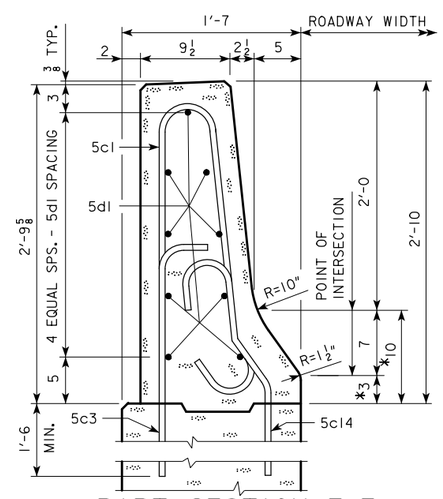

PART SECTION F-F

* DENOTES THE MAXIMUM VALUE FOR THIS DIMENSION. THIS DIMENSION MAY VARY DUE TO CONSTRUCTION INACCURACIES.

EPOXY REINF. STEEL-TWO BARRIER RAILS

SECTION	BAR	LOCATION	SHAPE	NO.	LENGTH	WEIGHT
STANDARD SECTION	5c1	VERTICAL		706	5'-11	4357
	5d1	LONGITUDINAL		180	37'-6	7041
		EPOXY COATED REINFORCING STEEL TOTAL LBS.				11,398

STAINLESS REINF. STEEL-TWO BARRIER RAILS

SECTION	BAR	LOCATION	SHAPE	NO.	LENGTH	WEIGHT
STANDARD SECTION	5c2	VERTICAL		686	6'-0	4293
	5c3	VERTICAL		20	3'-3	68
	5c14	VERTICAL		20	3'-10	80
		STAINLESS STEEL REINFORCING STEEL TOTAL LBS.				4,441

NOTE: THE REINFORCING STEEL QUANTITY IS TO BE INCLUDED ON THE SUMMARY QUANTITIES SHEET IN THE PLAN.

BENT BAR DETAILS

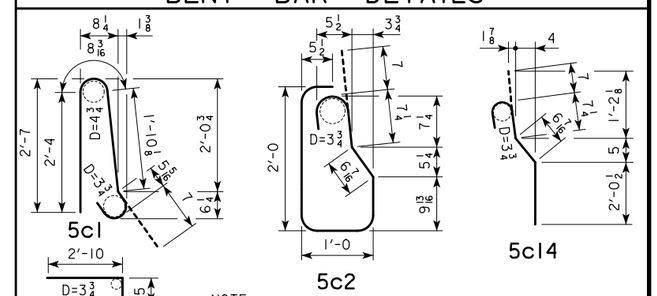

CONCRETE PLACEMENT SUMMARY

SECTION		TOTAL
STANDARD SECTION	2 @ 353.0 @ 0.1052 CU. YD. PER FT.	74.3
BARRIER RAIL END SECTION	4 @ 0.65 CU. YD.	2.6
	TOTAL (CU. YD.)	76.9

CONCRETE BARRIER RAIL QUANTITIES

ITEM	UNIT	QUANTITY
CONCRETE BARRIER RAILING	L.F.	734.0

LATEST REVISION DATE

APPROVED BY BRIDGE ENGINEER

IOWA DOT Highway Division

STANDARD DESIGN - 40' ROADWAY, 3 SPAN BRIDGES

ROLLED STEEL BEAM BRIDGES

OCTOBER, 2014

BARRIER RAIL DETAILS
340'-0 BRIDGE

RS40-088-14

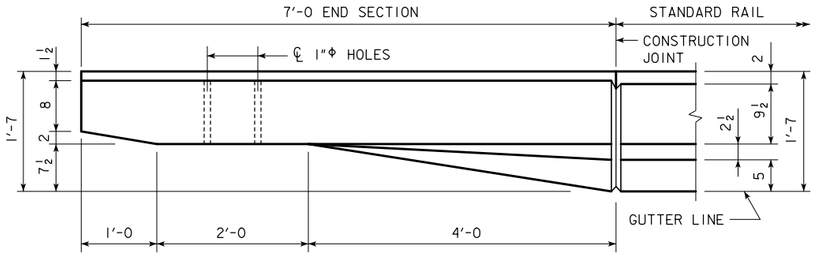

PART PLAN VIEW

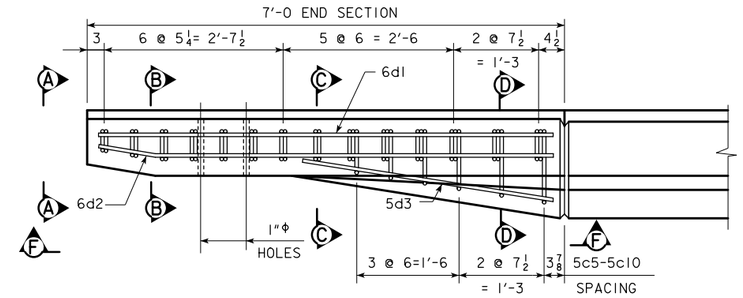

PART VIEW E-E

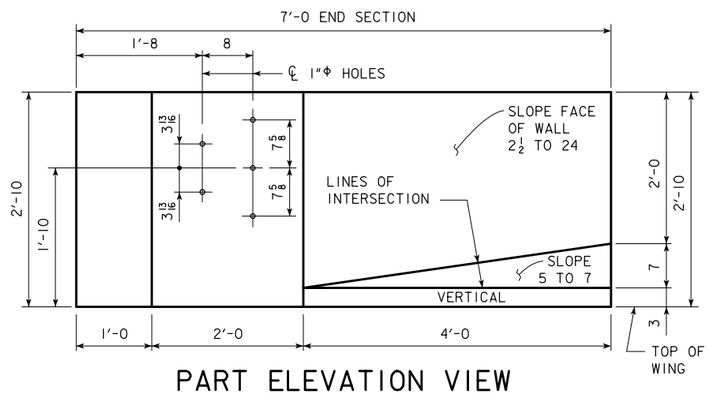

PART ELEVATION VIEW

PROVIDE 5 HOLES FORMED WITH 1"Φ PLASTIC CONDUIT. COST TO BE INCLUDED IN PRICE BID FOR CONCRETE BARRIER RAILING.

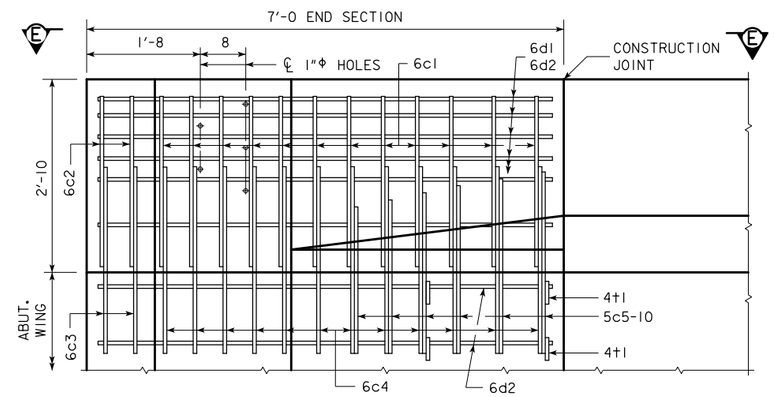

PART VIEW F-F

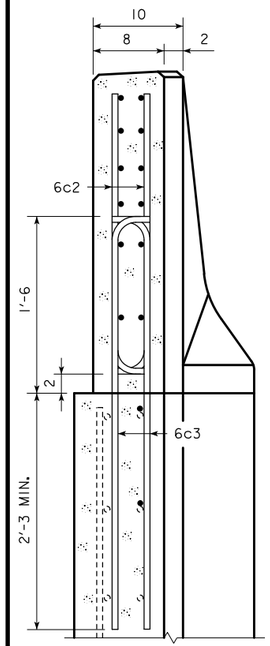

VIEW A-A

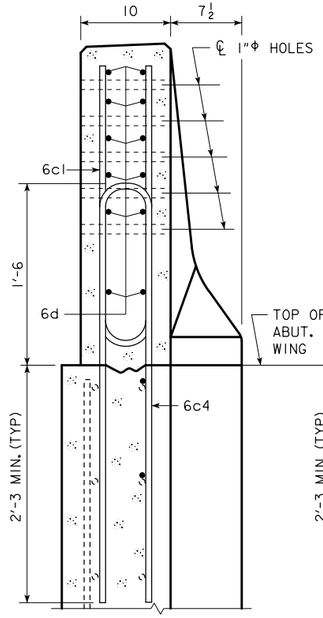

SECTION B-B

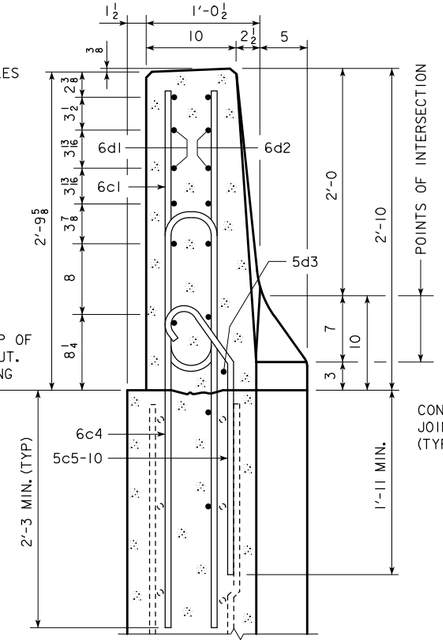

SECTION C-C

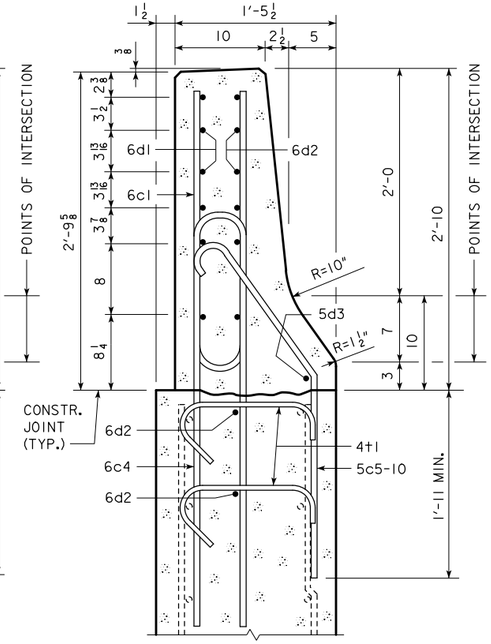

SECTION D-D

NOTE:
4t1 PLACEMENT- 2 BARS EACH LEVEL OF 6d2 IN WING FOOTING.

NOTE:
CONSTRUCTION JOINT BETWEEN TOP OF WING AND BARRIER RAIL IS ROUGHENED CONCRETE.

NOTE:
THE 10" RADIUS AND 1½" RADIUS ARE TYPICAL AND SHALL BE USED WHEN CONSTRUCTING THE CORNERS FOR VIEW A-A, SECTION B-B, SECTION C-C AND SECTION D-D.

NOTE:
THE 6c4, 6c3, 5c5-10, 2 - 6d2 & 4t1 BARS ARE TO BE PLACED WITH THE ABUTMENT WING. THE DETAILS FOR PLACEMENT ARE SHOWN ON THE WING ABUTMENT SHEET.

NOTE:
DASHED LINES BELOW THE TOP OF WING ARE THE ABUTMENT WING REINFORCING STEEL. SEE WING ABUTMENT SHEET FOR PLACEMENT.

EPOXY REINFORCING STEEL - ONE END SECTION

BAR	LOCATION	SHAPE	NO.	LENGTH	WEIGHT
6c1	VERTICAL	⊓	12	5'-6	99
6c2	VERTICAL	⌈	4	2'-10	17
6d1	HORIZONTAL	—	6	6'-8	60
6d2	HORIZONTAL	⟋	8	6'-9	81
5d3	HORIZONTAL	—	1	3'-9	4
4t1	ABUTMENT WING TIE BARS	⊓	4	VARIES	5
				EPOXY COATED TOTAL WEIGHT (LBS.)	266

STAINLESS REINFORCING STEEL - ONE END SECTION

BAR	LOCATION	SHAPE	NO.	LENGTH	WEIGHT
6c3	VERTICAL	⌈	4	4'-1	25
6c4	VERTICAL	⊓	12	8'-0	144
5c5-10	VERTICAL	⌒	6	VARIES	23
				STAINLESS STEEL TOTAL WEIGHT (LBS.)	192

NOTE: REINFORCING STEEL QUANTITIES ARE TO BE INCLUDED ON THE SUMMARY QUANTITIES SHEET IN THE PLAN.

CONCRETE PLACEMENT SUMMARY

SECTION	TOTAL
BARRIER RAIL ONE END SECTION	0.65 CU. YD.

BENT BAR DETAILS

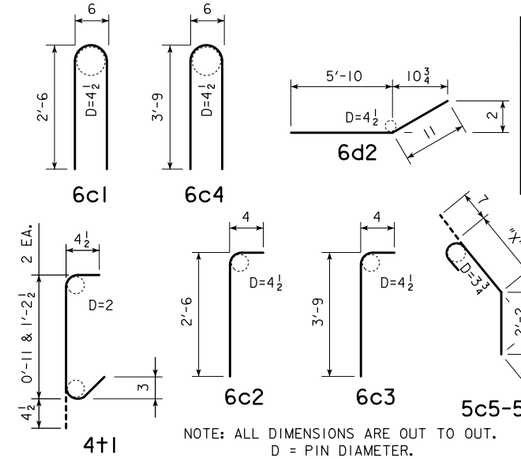

BAR	"X"
5c5	0'-6½
5c6	0'-8½
5c7	0'-10¼
5c8	1'-0¼
5c9	1'-2
5c10	1'-4

LATEST REVISION DATE

APPROVED BY BRIDGE ENGINEER

IOWA DOT Highway Division

STANDARD DESIGN - 40' ROADWAY, 3 SPAN BRIDGES

ROLLED STEEL BEAM BRIDGES

OCTOBER, 2014

BARRIER RAIL DETAILS END SECTION

RS40-089-14

EPOXY REINF. STEEL-TWO BARRIER RAILS - 0°, 10°, 20° AND 30° SKEW

BRIDGE LENGTH				160'-0			180'-0			200'-0			220'-0			240'-0			260'-0			280'-0			300'-0			320'-0		
SECTION	BAR	LOCATION	SHAPE	NO.	LENGTH	WEIGHT	NO.	LENGTH	WEIGHT	NO.	LENGTH	WEIGHT	NO.	LENGTH	WEIGHT	NO.	LENGTH	WEIGHT	NO.	LENGTH	WEIGHT	NO.	LENGTH	WEIGHT	NO.	LENGTH	WEIGHT	NO.	LENGTH	WEIGHT
STANDARD SECTION	5c1	VERTICAL		326	5'-11	2012	366	5'-11	2259	406	5'-11	2506	446	5'-11	2752	486	5'-11	2999	526	5'-11	3246	566	5'-11	3493	606	5'-11	3740	646	5'-11	3987
	5d1	LONGITUDINAL		90	34'-5	3231	108	32'-4	3642	108	35'-8	4018	126	33'-9	4435	126	36'-8	4819	144	34'-10	5232	144	37'-4	5607	162	35'-8	6026	162	38'-0	6421
	EPOXY COATED REINFORCING STEEL TOTAL LBS.					5,243			5,901			6,524			7,187			7,818			8,478			9,100			9,766			10,408

STAINLESS STEEL REINF. STEEL-TWO BARRIER RAILS - 0°, 10°, 20° AND 30° SKEW

BRIDGE LENGTH				160'-0			180'-0			200'-0			220'-0			240'-0			260'-0			280'-0			300'-0			320'-0		
SECTION	BAR	LOCATION	SHAPE	NO.	LENGTH	WEIGHT	NO.	LENGTH	WEIGHT	NO.	LENGTH	WEIGHT	NO.	LENGTH	WEIGHT	NO.	LENGTH	WEIGHT	NO.	LENGTH	WEIGHT	NO.	LENGTH	WEIGHT	NO.	LENGTH	WEIGHT	NO.	LENGTH	WEIGHT
STANDARD SECTION	5c2	VERTICAL		326	6'-0	2040	366	6'-0	2290	406	6'-0	2541	446	6'-0	2791	486	6'-0	3041	526	6'-0	3292	566	6'-0	3542	606	6'-0	3792	646	6'-0	4043
	STAINLESS STEEL REINFORCING STEEL TOTAL LBS.					2,040			2,290			2,541			2,791			3,041			3,292			3,542			3,792			4,043

EPOXY REINF. STEEL-TWO BARRIER RAILS - 45° SKEW

BRIDGE LENGTH				160'-0			180'-0			200'-0			220'-0			240'-0			260'-0			280'-0			300'-0			320'-0		
SECTION	BAR	LOCATION	SHAPE	NO.	LENGTH	WEIGHT	NO.	LENGTH	WEIGHT	NO.	LENGTH	WEIGHT	NO.	LENGTH	WEIGHT	NO.	LENGTH	WEIGHT	NO.	LENGTH	WEIGHT	NO.	LENGTH	WEIGHT	NO.	LENGTH	WEIGHT	NO.	LENGTH	WEIGHT
STANDARD SECTION	5c1	VERTICAL		328	5'-11	2024	368	5'-11	2271	408	5'-11	2518	448	5'-11	2765	488	5'-11	3011	528	5'-11	3258	568	5'-11	3505	608	5'-11	3752	648	5'-11	3999
	5d1	LONGITUDINAL		90	34'-7	3246	108	32'-7	3671	108	35'-11	4046	126	34'-0	4469	126	36'-10	4841	144	35'-0	5257	144	37'-6	5633	162	35'-10	6055	162	38'-1	6435
	EPOXY COATED REINFORCING STEEL TOTAL LBS.					5,270			5,942			6,564			7,234			7,852			8,515			9,138			9,807			10,434

STAINLESS STEEL REINF. STEEL-TWO BARRIER RAILS - 45° SKEW

BRIDGE LENGTH				160'-0			180'-0			200'-0			220'-0			240'-0			260'-0			280'-0			300'-0			320'-0		
SECTION	BAR	LOCATION	SHAPE	NO.	LENGTH	WEIGHT	NO.	LENGTH	WEIGHT	NO.	LENGTH	WEIGHT	NO.	LENGTH	WEIGHT	NO.	LENGTH	WEIGHT	NO.	LENGTH	WEIGHT	NO.	LENGTH	WEIGHT	NO.	LENGTH	WEIGHT	NO.	LENGTH	WEIGHT
STANDARD SECTION	5c2	VERTICAL		328	6'-0	2053	368	6'-0	2303	408	6'-0	2553	448	6'-0	2804	488	6'-0	3054	528	6'-0	3304	568	6'-0	3555	608	6'-0	3805	648	6'-0	4055
	STAINLESS STEEL REINFORCING STEEL TOTAL LBS.					2,053			2,303			2,553			2,804			3,054			3,304			3,555			3,805			4,055

NOTE: THE REINFORCING STEEL QUANTITIES ARE TO BE INCLUDED ON THE SUMMARY QUANTITIES SHEET IN THE PLAN.

BENT BAR DETAILS

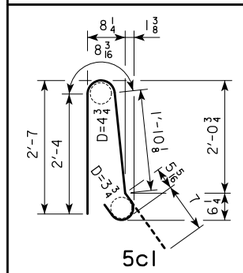

5c1

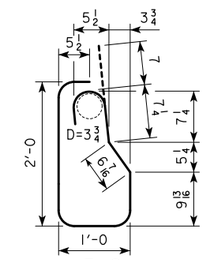

5c2

NOTE:
ALL DIMENSIONS ARE OUT TO OUT.
D = PIN DIAMETER.

CONCRETE PLACEMENT SUMMARY

BRIDGE LENGTH	160'-0	180'-0	200'-0	220'-0	240'-0	260'-0	280'-0	300'-0	320'-0
STANDARD SECTION * 2 X B @ 0.1052 CU.YD. PER FT.	34.6	38.8	43.0	47.2	51.4	55.6	59.8	64.0	68.2
END SECTION 4 @ 0.65 CU.YD.	2.6	2.6	2.6	2.6	2.6	2.6	2.6	2.6	2.6
TOTAL (CU. YD.)	37.2	41.4	45.6	49.8	54.0	58.2	62.4	66.6	70.8

* SEE RS40-087-14 FOR DIMENSION "B". CONCRETE QUANTITIES SHOWN ARE BASED ON 45° SKEW BID LENGTHS.

CONCRETE BARRIER RAIL QUANTITIES

BRIDGE LENGTH		UNIT	160'-0	180'-0	200'-0	220'-0	240'-0	260'-0	280'-0	300'-0	320'-0
CONCRETE BARRIER RAILING	0° SKEW	L.F.	354.0	394.0	434.0	474.0	514.0	554.0	594.0	634.0	674.0
CONCRETE BARRIER RAILING	10° SKEW	L.F.	354.1	394.1	434.1	474.1	514.1	554.1	594.1	634.1	674.1
CONCRETE BARRIER RAILING	20° SKEW	L.F.	354.4	394.4	434.4	474.4	514.4	554.4	594.4	634.4	674.4
CONCRETE BARRIER RAILING	30° SKEW	L.F.	354.9	394.9	434.9	474.9	514.9	554.9	594.9	634.9	674.9
CONCRETE BARRIER RAILING	45° SKEW	L.F.	356.5	396.5	436.5	476.5	516.5	556.5	596.5	636.5	676.5

LATEST REVISION DATE

APPROVED BY BRIDGE ENGINEER

IOWA DOT Highway Division

STANDARD DESIGN - 40' ROADWAY, 3 SPAN BRIDGES

ROLLED STEEL BEAM BRIDGES

OCTOBER, 2014

BARRIER RAIL DETAILS QUANTITIES

RS40-090-14

BOSSED FOR	HOLE	FOR CONDUIT SIZE
5 THREADS	C	2"Φ RIGID STEEL
NONE	E	$\frac{1}{2}$"Φ COPPER PIPE

NOTE:
THE GROUNDING BUTTONS ARE TO BE BLIND DRILLED AND TAPPED FOR $\frac{3}{8}$"Φ × 0'-0$\frac{3}{4}$ BOLTS.

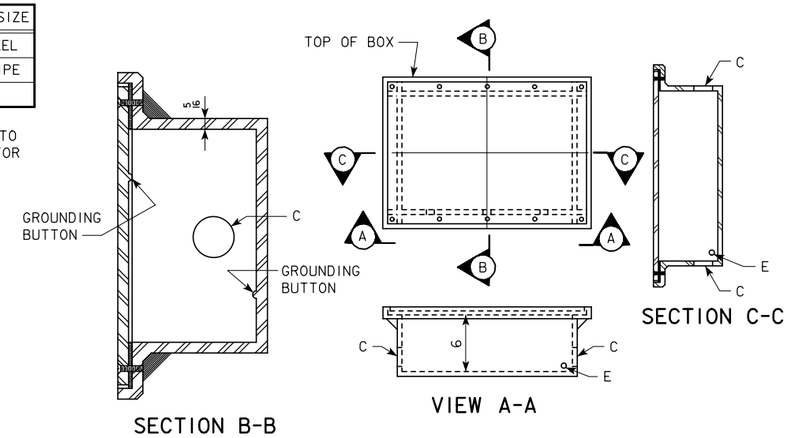

LI-104 JUNCTION BOX

WATERTIGHT , CAST IRON - FLUSH MOUNT

LIGHTING NOTES:

SEE LI-104 STANDARD ROAD PLAN FOR ADDITIONAL INFORMATION ON JUNCTION BOXES.

CONSTRUCTION SHALL CONFORM TO THE CURRENT IOWA D.O.T. STANDARD AND SUPPLEMENTAL SPECIFICATIONS AND SPECIAL PROVISIONS.

CONDUIT INSTALLATION SHALL BE IN ACCORDANCE WITH ARTICLE 2523.03, N, OF THE STANDARD SPECIFICATIONS.

ALL "C" ENTRANCE HOLES IN JUNCTION BOXES SHALL BE DRILLED AND TAPPED FOR THE SPECIFIED CONDUIT SIZE. ALL OTHER HOLES SHALL HAVE A CONCRETE - TIGHT SLIP FIT. CONDUIT ENDS SHALL NOT PROTRUDE INTO JUNCTION BOX MORE THAN $\frac{1}{4}$". DRAIN PIPE END SHALL BE FLUSH WITH INSIDE SURFACE OF BOX. GROUNDING BUTTONS SHALL BE LOCATED APPROXIMATELY 3" FROM THE INSIDE SURFACE OF THE BOX WALL, AND NOT CLOSER THAN 3" TO THE EDGE OF ANY HOLE IN THE BOX FLOOR. HOLES FOR DRAIN PIPE SHALL BE PLACED IN THE LOW CORNER OF THE BOX, WITH A MINIMUM CLEARANCE OF 1" BETWEEN THE EDGE OF THE HOLE AND THE INSIDE SURFACE OF THE BOX WALL. TYPICAL DETAILS ARE SHOWN ON THIS SHEET.

THE RIGID STEEL CONDUIT, JUNCTION BOXES AND FITTINGS INCLUDING LABOR AND ANY ADDITIONAL WORK TO DO THE INSTALLATION IS CONSIDERED INCIDENTAL TO THE COST OF THE RAILING.

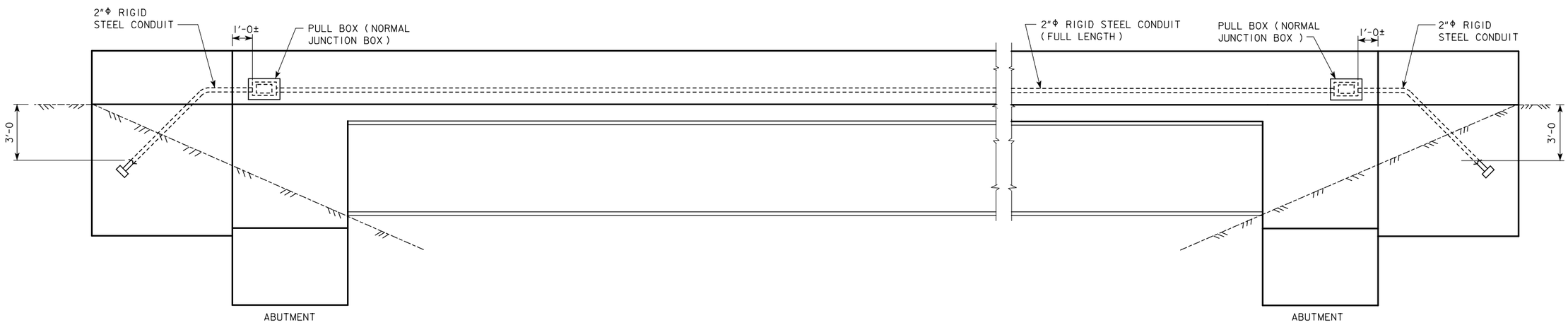

EXTERIOR ELEVATION

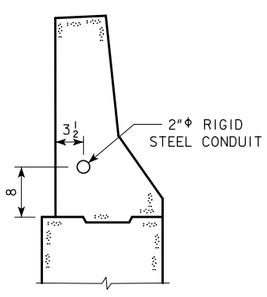

SECTION THRU BARRIER RAIL

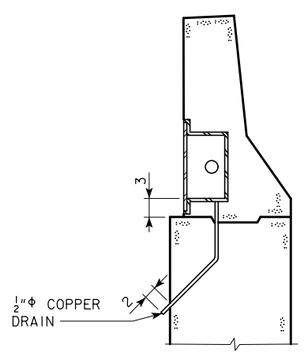

SECTION THRU JUNCTION BOX

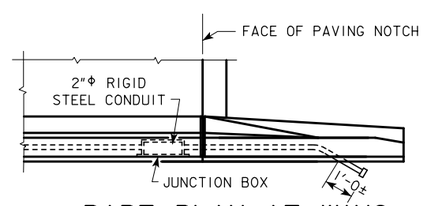

PART PLAN AT WING

LATEST REVISION DATE

APPROVED BY BRIDGE ENGINEER

IOWA DOT Highway Division

STANDARD DESIGN - 40' ROADWAY, 3 SPAN BRIDGES

ROLLED STEEL BEAM BRIDGES

OCTOBER, 2014

JUNCTION BOX AND CONDUIT DETAILS SHEET 1

RS40-091-14

BOSSED FOR	HOLE	FOR CONDUIT SIZE
5 THREADS	C	2"Φ RIGID STEEL
NONE	E	$\frac{1}{2}$"Φ COPPER PIPE

NOTE:
THE GROUNDING BUTTONS ARE TO BE BLIND DRILLED AND TAPPED FOR $\frac{3}{8}$"Φ × 0'-0$\frac{3}{4}$ BOLTS.

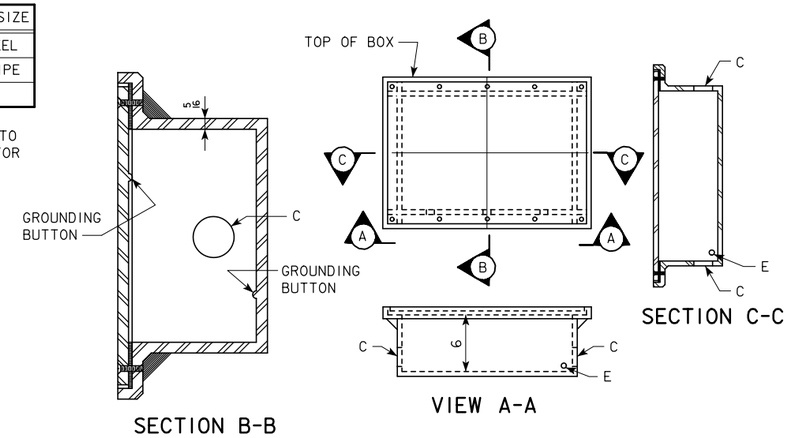

LI-104 JUNCTION BOX

WATERTIGHT , CAST IRON - FLUSH MOUNT

LIGHTING NOTES:

SEE LI-104 STANDARD ROAD PLAN FOR ADDITIONAL INFORMATION ON JUNCTION BOXES.

CONSTRUCTION SHALL CONFORM TO THE CURRENT IOWA D.O.T. STANDARD AND SUPPLEMENTAL SPECIFICATIONS AND SPECIAL PROVISIONS.

CONDUIT INSTALLATION SHALL BE IN ACCORDANCE WITH ARTICLE 2523.03, N, OF THE STANDARD SPECIFICATIONS.

ALL "C" ENTRANCE HOLES IN JUNCTION BOXES SHALL BE DRILLED AND TAPPED FOR THE SPECIFIED CONDUIT SIZE. ALL OTHER HOLES SHALL HAVE A CONCRETE - TIGHT SLIP FIT. CONDUIT ENDS SHALL NOT PROTRUDE INTO JUNCTION BOX MORE THAN $\frac{1}{4}$". DRAIN PIPE END SHALL BE FLUSH WITH INSIDE SURFACE OF BOX. GROUNDING BUTTONS SHALL BE LOCATED APPROXIMATELY 3" FROM THE INSIDE SURFACE OF THE BOX WALL, AND NOT CLOSER THAN 3" TO THE EDGE OF ANY HOLE IN THE BOX FLOOR. HOLES FOR DRAIN PIPE SHALL BE PLACED IN THE LOW CORNER OF THE BOX, WITH A MINIMUM CLEARANCE OF 1" BETWEEN THE EDGE OF THE HOLE AND THE INSIDE SURFACE OF THE BOX WALL. TYPICAL DETAILS ARE SHOWN ON THIS SHEET.

THE RIGID STEEL CONDUIT, JUNCTION BOXES AND FITTINGS INCLUDING LABOR AND ANY ADDITIONAL WORK TO DO THE INSTALLATION IS CONSIDERED INCIDENTAL TO THE COST OF THE RAILING.

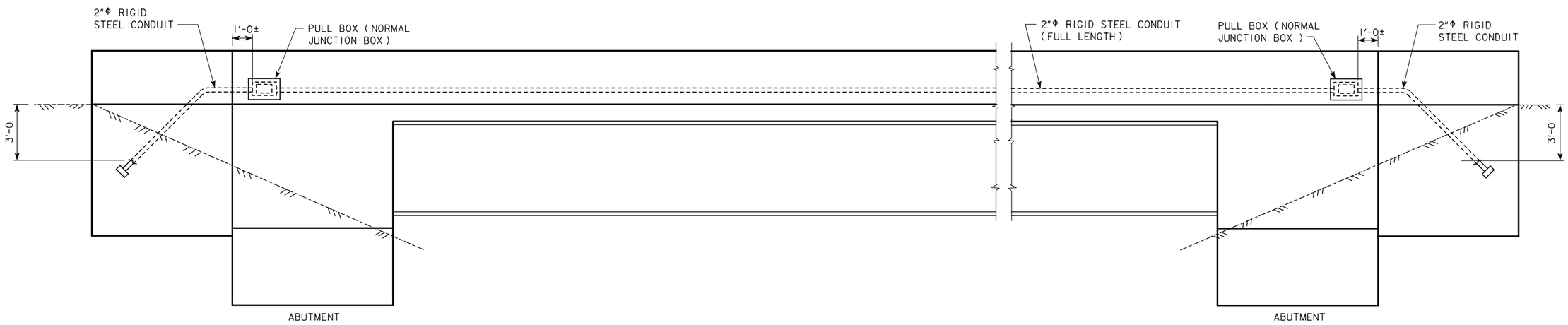

EXTERIOR ELEVATION

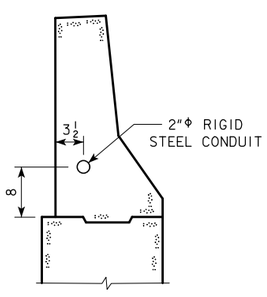

SECTION THRU BARRIER RAIL

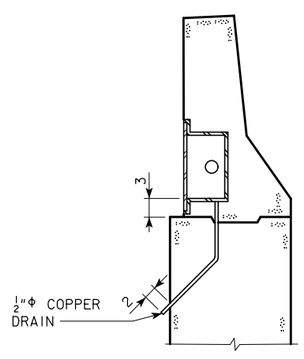

SECTION THRU JUNCTION BOX

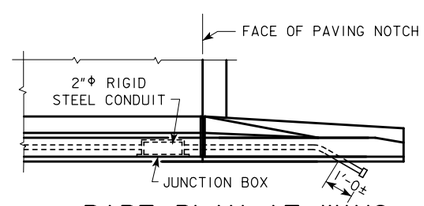

PART PLAN AT WING

LATEST REVISION DATE

APPROVED BY BRIDGE ENGINEER

IOWA DOT Highway Division

STANDARD DESIGN - 40' ROADWAY, 3 SPAN BRIDGES

ROLLED STEEL BEAM BRIDGES

OCTOBER, 2014

JUNCTION BOX AND CONDUIT DETAILS SHEET 2

RS40-092-14

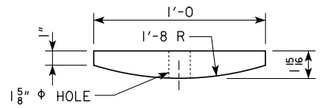

SOLE PLATE ELEVATION

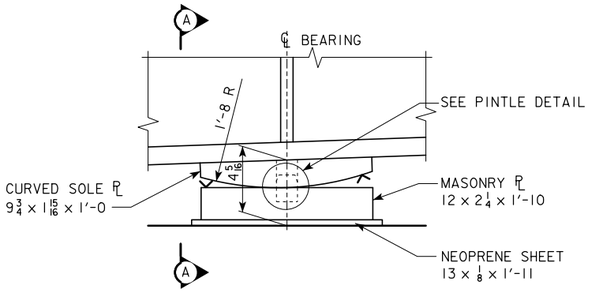

PARTIAL ELEVATION

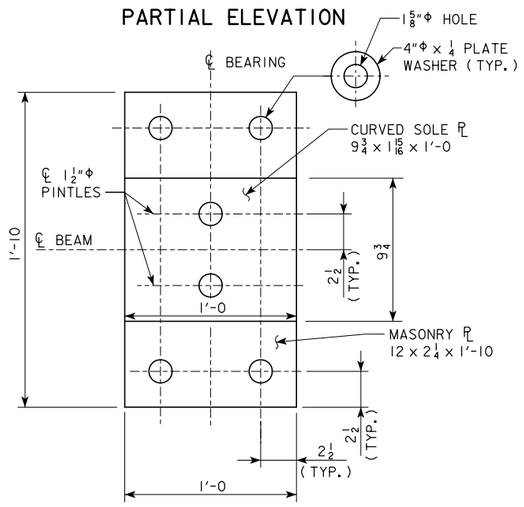

PLAN

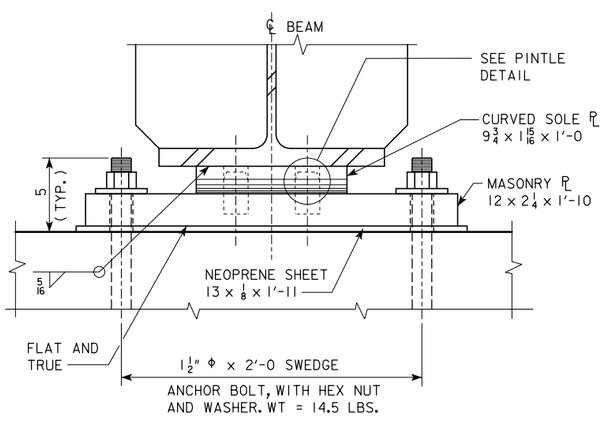

SECTION A-A

FIXED PIER BEARING

MASONRY PL / CURVED SOLE PL ASSEMBLY

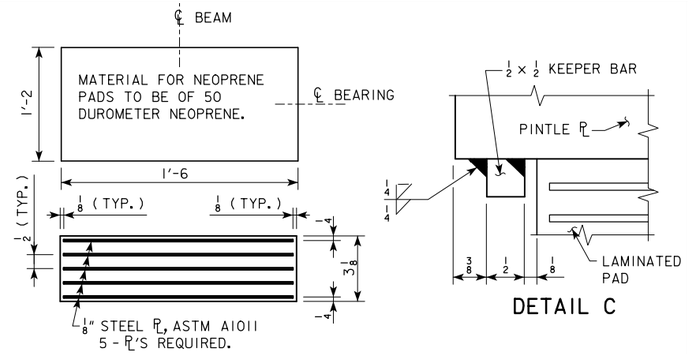

LAMINATED NEOPRENE PADS

DETAIL C

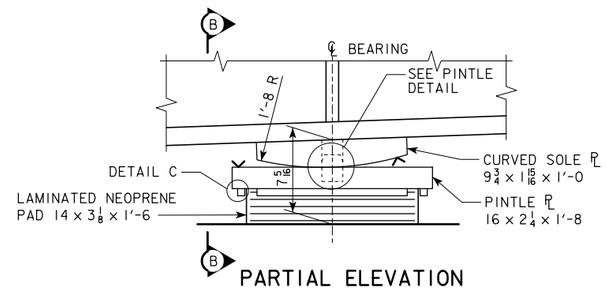

PARTIAL ELEVATION

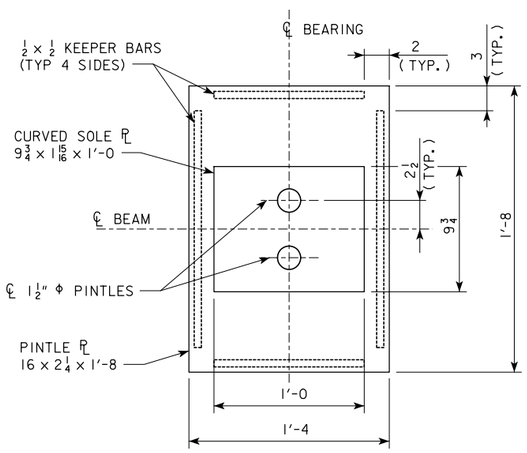

PLAN

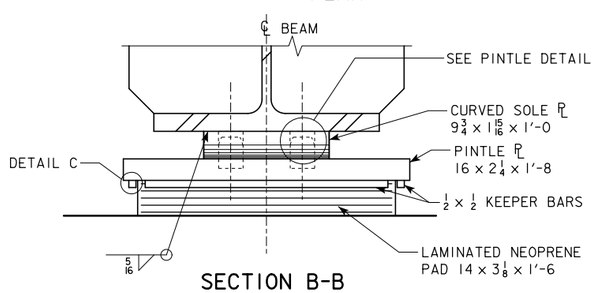

SECTION B-B

EXPANSION PIER BEARING

LAMINATED NEOPRENE / CURVED SOLE PL ASSEMBLY

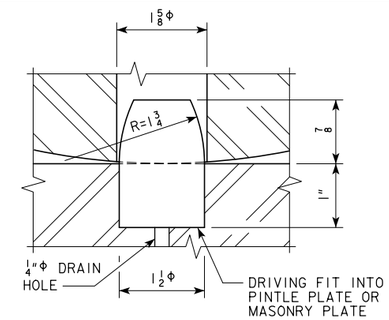

PINTLE DETAIL

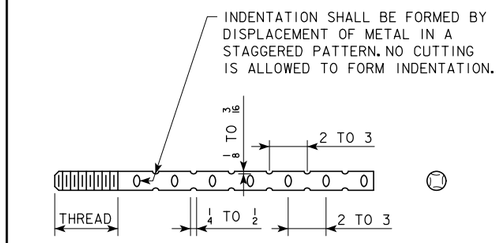

ANCHOR BOLT SWEDGE DETAIL

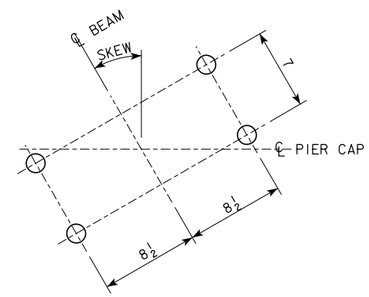

ANCHOR BOLT SETTING DIAGRAM

STRUCTURAL STEEL		
DATA FOR ONE BEARING		
BEAM SIZE	FIXED BRG.	EXP. BRG.
WEIGHT (LBS.)	277	259

WEIGHT INCLUDES SOLE PL, PINTLE PL, MASONRY PL, ANCHOR BOLTS, NUTS, WASHERS AND WELDS.

NOTE: STRUCTURAL STEEL WEIGHT IS INCLUDED ON THE SUMMARY QUANTITIES SHEET.

BEARING NOTES:

1. SURFACES MARKED "V" SHALL MEET ANSI 250 SURFACE FINISH.
2. MASONRY PLATES ARE TO BE SET ON A 1/8 INCH NEOPRENE SHEET.
3. PINTLE PLATES, SOLE PLATES, ANCHOR BOLTS, AND MASONRY PLATES, ARE A PART OF THE STRUCTURAL STEEL QUANTITY. UNIT PRICE BID FOR STRUCTURAL STEEL SHALL INCLUDE ALLOWANCE FOR COST OF THE 1/8" NEOPRENE SHEETS AND NEOPRENE BEARING PADS.
4. THE PINTLE PLATES, KEEPER BARS AND MASONRY PLATES SHALL BE GALVANIZED. ALL WELDING SHALL BE COMPLETED PRIOR TO GALVANIZING.
5. THE SURFACE OF THE PINTLE PLATE IN CONTACT WITH THE LAMINATED NEOPRENE PADS AND CURVED SOLE PLATE SHALL BE FREE OF PROJECTIONS DUE TO THE GALVANIZING.
6. CURVED SOLE PLATES SHALL COMPLY WITH ASTM A709 GRADE 50W AND SHALL BE PAINTED PER STANDARD SPECIFICATIONS. KEEPER BARS, PINTLE PLATES AND MASONRY PLATES, WHICH ARE TO BE GALVANIZED, SHALL COMPLY WITH ASTM A709 GRADE 50.
7. ANCHOR BOLTS, NUTS AND WASHERS SHALL MEET THE REQUIREMENTS OF I.M. 453.08.
8. BEARINGS SHOWN ON THIS DRAWING MAY BE USED FOR APPLICATIONS WITH LOCAL BEAM SLOPES BETWEEN 0% - 6%±. FOR SITUATIONS OUTSIDE OF THIS SLOPE RANGE, THE DESIGNER SHALL EVALUATE THE BEARING'S APPLICABILITY IN ACCORDANCE WITH CURRENT IOWA DEPARTMENT OF TRANSPORTATION AND AASHTO SPECIFICATIONS ON BEARING DESIGN.
9. THE 1/8 INCH NEOPRENE SHEETS ARE TO BE 50, 60, OR 70 DUROMETER HARDNESS AND SHALL BE 1 INCH GREATER IN LENGTH AND WIDTH THAN THE BOTTOM SURFACES OF THE MASONRY PLATES OR STEEL BEARINGS.

LATEST REVISION DATE

APPROVED BY BRIDGE ENGINEER

IOWA DOT Highway Division

STANDARD DESIGN - 40' ROADWAY, 3 SPAN BRIDGES

ROLLED STEEL BEAM BRIDGES

OCTOBER, 2014

PIER BEARING DETAILS
160'-0 TO 200'-0 SPAN

RS40-093-14

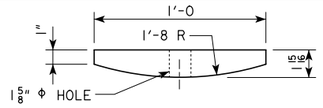

SOLE PLATE ELEVATION

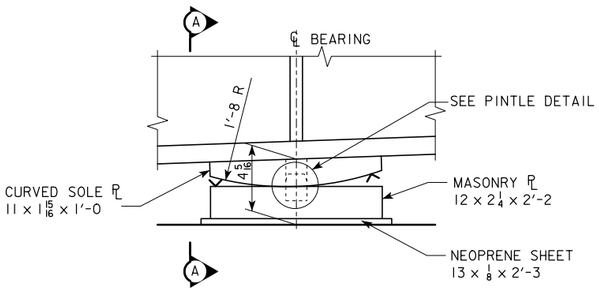

PARTIAL ELEVATION

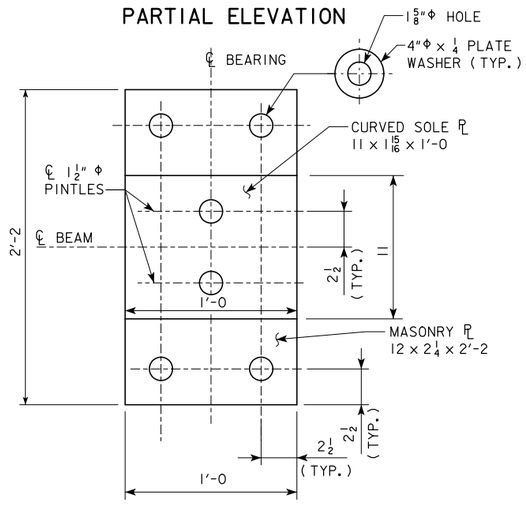

PLAN

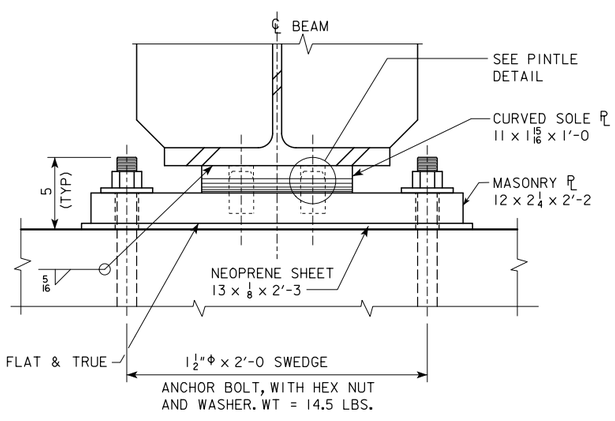

SECTION A-A

FIXED PIER BEARING

MASONRY PL / CURVED SOLE PL ASSEMBLY

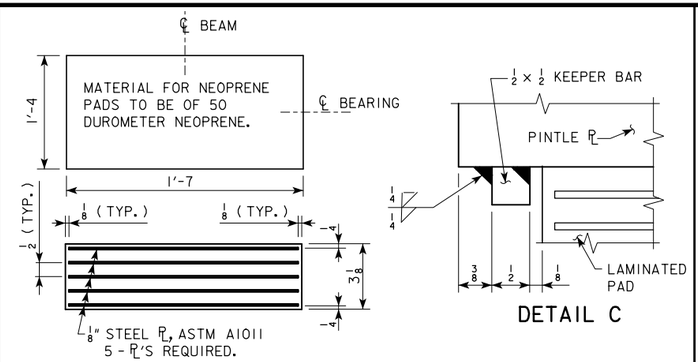

DETAIL C

LAMINATED NEOPRENE PADS

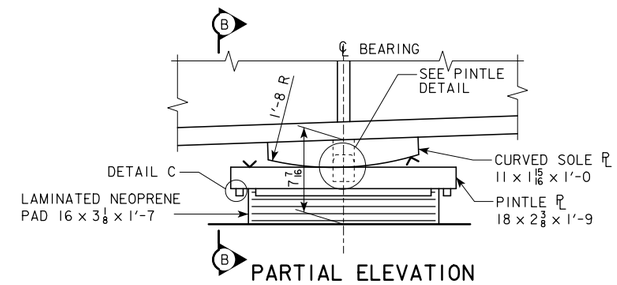

PARTIAL ELEVATION

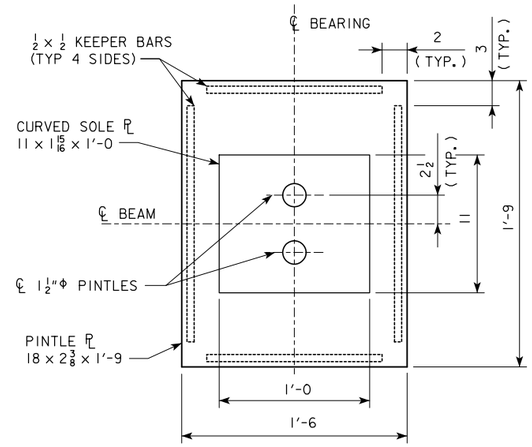

PLAN

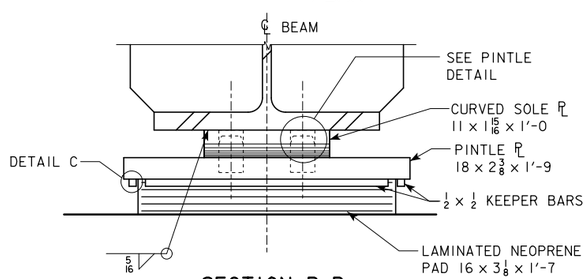

SECTION B-B

EXPANSION PIER BEARING

LAMINATED NEOPRENE / CURVED SOLE PL ASSEMBLY

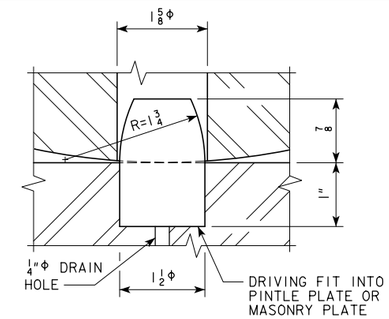

PINTLE DETAIL

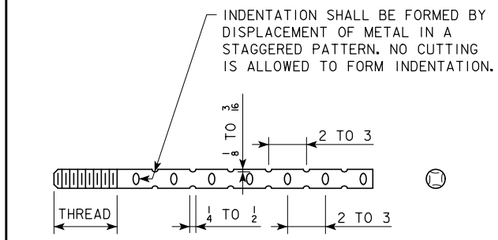

ANCHOR BOLT SWEDGE DETAIL

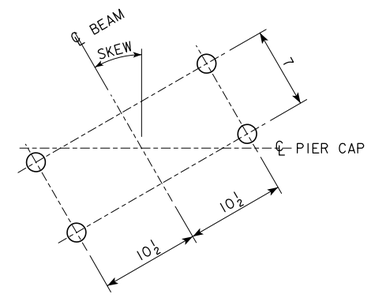

ANCHOR BOLT SETTING DIAGRAM

STRUCTURAL STEEL		
DATA FOR ONE BEARING		
BEAM SIZE	FIXED BRG.	EXP. BRG.
WEIGHT (LBS.)	314	316

WEIGHT INCLUDES SOLE PL, PINTLE PL, MASONRY PL, ANCHOR BOLTS, NUTS, WASHERS AND WELDS.

NOTE: STRUCTURAL STEEL WEIGHT IS INCLUDED ON THE SUMMARY QUANTITIES SHEET.

BEARING NOTES:

1. SURFACES MARKED "V" SHALL MEET ANSI 250 SURFACE FINISH.
2. MASONRY PLATES ARE TO BE SET ON A 1/8 INCH NEOPRENE SHEET.
3. PINTLE PLATES, SOLE PLATES, ANCHOR BOLTS, AND MASONRY PLATES, ARE A PART OF THE STRUCTURAL STEEL QUANTITY. UNIT PRICE BID FOR STRUCTURAL STEEL SHALL INCLUDE ALLOWANCE FOR COST OF THE 1/8" NEOPRENE SHEETS AND NEOPRENE BEARING PADS.
4. THE PINTLE PLATES, KEEPER BARS AND MASONRY PLATES SHALL BE GALVANIZED. ALL WELDING SHALL BE COMPLETED PRIOR TO GALVANIZING.
5. THE SURFACE OF THE PINTLE PLATE IN CONTACT WITH THE LAMINATED NEOPRENE PADS AND CURVED SOLE PLATE SHALL BE FREE OF PROJECTIONS DUE TO THE GALVANIZING.
6. CURVED SOLE PLATES SHALL COMPLY WITH ASTM A709 GRADE 50W AND SHALL BE PAINTED PER STANDARD SPECIFICATIONS. KEEPER BARS, PINTLE PLATES AND MASONRY PLATES, WHICH ARE TO BE GALVANIZED, SHALL COMPLY WITH ASTM A709 GRADE 50.
7. ANCHOR BOLTS, NUTS AND WASHERS SHALL MEET THE REQUIREMENTS OF I.M. 453.08.
8. BEARINGS SHOWN ON THIS DRAWING MAY BE USED FOR APPLICATIONS WITH LOCAL BEAM SLOPES BETWEEN 0% - 6%±. FOR SITUATIONS OUTSIDE OF THIS SLOPE RANGE, THE DESIGNER SHALL EVALUATE THE BEARING'S APPLICABILITY IN ACCORDANCE WITH CURRENT IOWA DEPARTMENT OF TRANSPORTATION AND AASHTO SPECIFICATIONS ON BEARING DESIGN.
9. THE 1/8 INCH NEOPRENE SHEETS ARE TO BE 50, 60, OR 70 DUROMETER HARDNESS AND SHALL BE 1 INCH GREATER IN LENGTH AND WIDTH THAN THE BOTTOM SURFACES OF THE MASONRY PLATES OR STEEL BEARINGS.

LATEST REVISION DATE

APPROVED BY BRIDGE ENGINEER

IOWA DOT Highway Division

STANDARD DESIGN - 40' ROADWAY, 3 SPAN BRIDGES

ROLLED STEEL BEAM BRIDGES

OCTOBER, 2014

PIER BEARING DETAILS 220'-0 TO 260'-0 SPAN

RS40-094-14

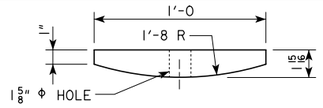

SOLE PLATE ELEVATION

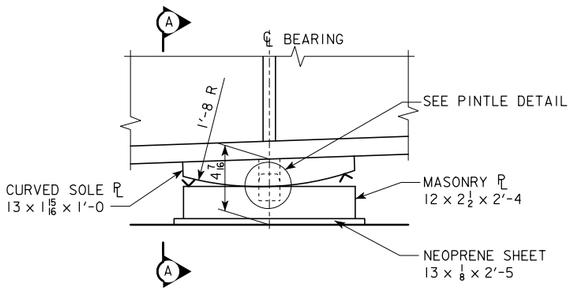

PARTIAL ELEVATION

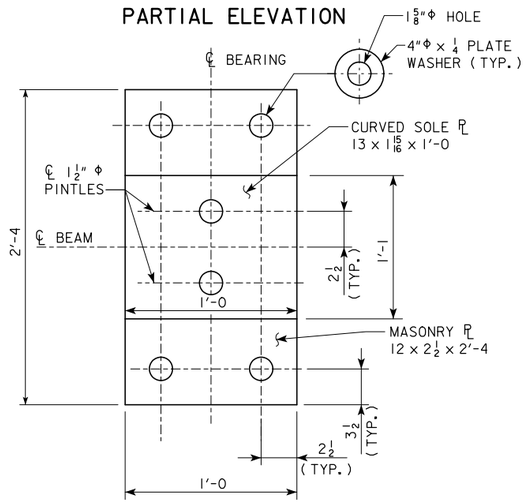

PLAN

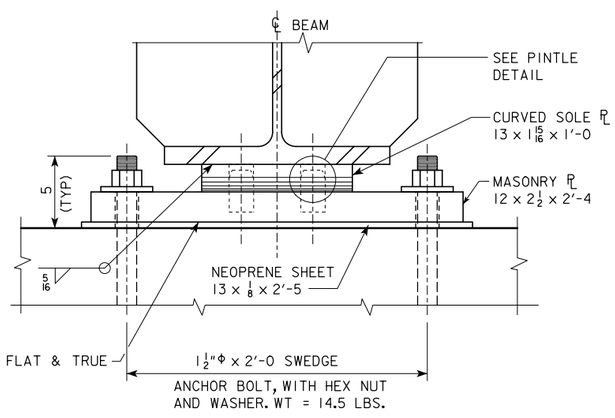

SECTION A-A

FIXED PIER BEARING

MASONRY PL / CURVED SOLE PL ASSEMBLY

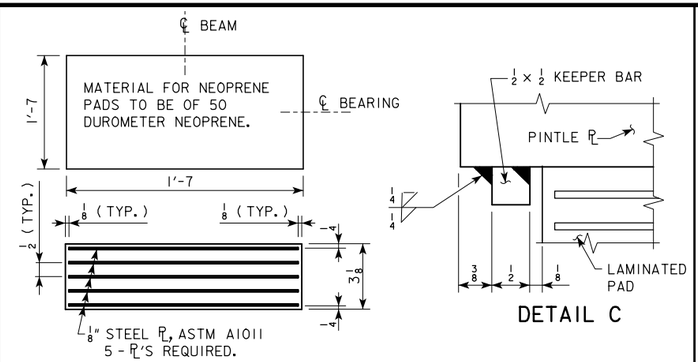

LAMINATED NEOPRENE PADS

DETAIL C

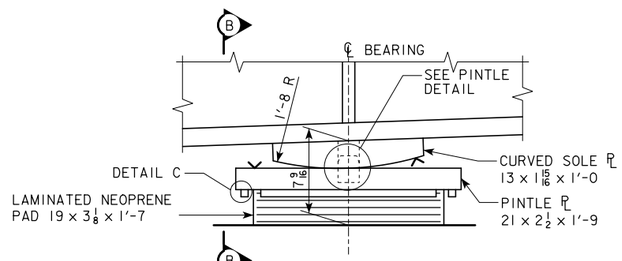

PARTIAL ELEVATION

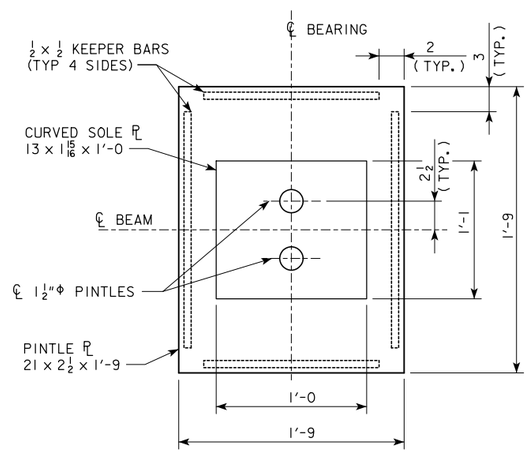

PLAN

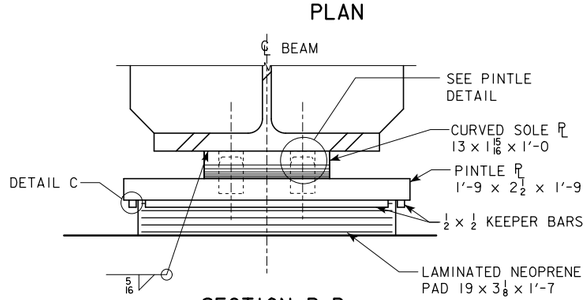

SECTION B-B

EXPANSION PIER BEARING

LAMINATED NEOPRENE / CURVED SOLE PL ASSEMBLY

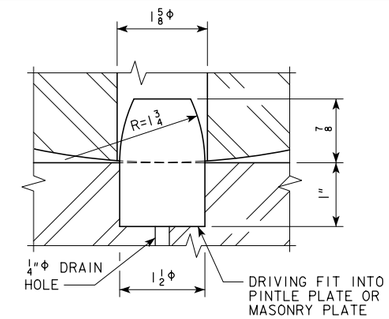

PINTLE DETAIL

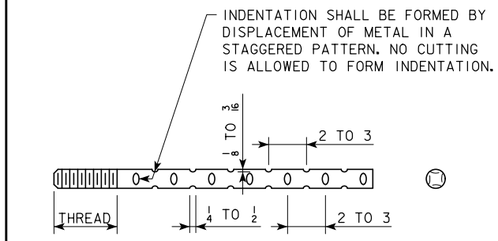

ANCHOR BOLT SWEDGE DETAIL

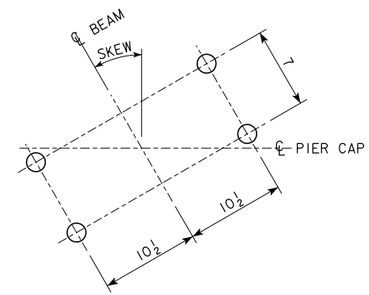

ANCHOR BOLT SETTING DIAGRAM

STRUCTURAL STEEL		
DATA FOR ONE BEARING		
BEAM SIZE	FIXED BRG.	EXP. BRG.
WEIGHT (LBS.)	362	384

WEIGHT INCLUDES SOLE PL, PINTLE PL, MASONRY PL, ANCHOR BOLTS, NUTS, WASHERS AND WELDS.

NOTE: STRUCTURAL STEEL WEIGHT IS INCLUDED ON THE SUMMARY QUANTITIES SHEET.

BEARING NOTES:

1. SURFACES MARKED "V" SHALL MEET ANSI 250 SURFACE FINISH.
2. MASONRY PLATES ARE TO BE SET ON A 1/8 INCH NEOPRENE SHEET.
3. PINTLE PLATES, SOLE PLATES, ANCHOR BOLTS, AND MASONRY PLATES, ARE A PART OF THE STRUCTURAL STEEL QUANTITY. UNIT PRICE BID FOR STRUCTURAL STEEL SHALL INCLUDE ALLOWANCE FOR COST OF THE 1/8" NEOPRENE SHEETS AND NEOPRENE BEARING PADS.
4. THE PINTLE PLATES, KEEPER BARS AND MASONRY PLATES SHALL BE GALVANIZED. ALL WELDING SHALL BE COMPLETED PRIOR TO GALVANIZING.
5. THE SURFACE OF THE PINTLE PLATE IN CONTACT WITH THE LAMINATED NEOPRENE PADS AND CURVED SOLE PLATE SHALL BE FREE OF PROJECTIONS DUE TO THE GALVANIZING.
6. CURVED SOLE PLATES SHALL COMPLY WITH ASTM A709 GRADE 50W AND SHALL BE PAINTED PER STANDARD SPECIFICATIONS. KEEPER BARS, PINTLE PLATES AND MASONRY PLATES, WHICH ARE TO BE GALVANIZED, SHALL COMPLY WITH ASTM A709 GRADE 50.
7. ANCHOR BOLTS, NUTS AND WASHERS SHALL MEET THE REQUIREMENTS OF I.M. 453.08.
8. BEARINGS SHOWN ON THIS DRAWING MAY BE USED FOR APPLICATIONS WITH LOCAL BEAM SLOPES BETWEEN 0% - 6%±. FOR SITUATIONS OUTSIDE OF THIS SLOPE RANGE, THE DESIGNER SHALL EVALUATE THE BEARING'S APPLICABILITY IN ACCORDANCE WITH CURRENT IOWA DEPARTMENT OF TRANSPORTATION AND AASHTO SPECIFICATIONS ON BEARING DESIGN.
9. THE 1/8 INCH NEOPRENE SHEETS ARE TO BE 50, 60, OR 70 DUROMETER HARDNESS AND SHALL BE 1 INCH GREATER IN LENGTH AND WIDTH THAN THE BOTTOM SURFACES OF THE MASONRY PLATES OR STEEL BEARINGS.

LATEST REVISION DATE

APPROVED BY BRIDGE ENGINEER

IOWA DOT Highway Division

STANDARD DESIGN - 40' ROADWAY, 3 SPAN BRIDGES

ROLLED STEEL BEAM BRIDGES

OCTOBER, 2014

PIER BEARING DETAILS 280'-0 TO 340'-0 SPAN

RS40-095-14

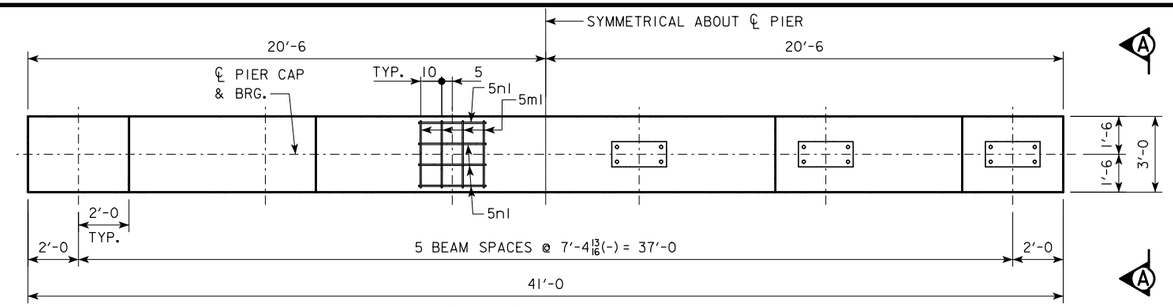

TYPICAL PLAN

NOTE:
ANCHOR BOLTS REQUIRED FOR FIXED PIER BEARINGS ONLY. FOR BOLT AND BEARING SIZES, SEE RS40-093-14, RS40-094-14 OR RS40-095-14.

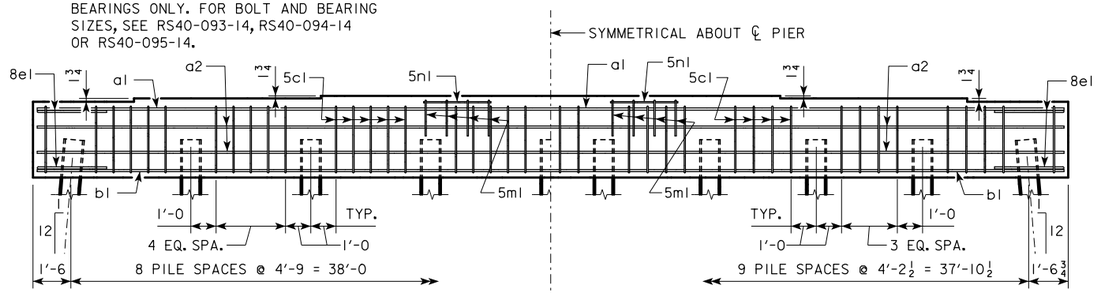

9 PILE BENT

10 PILE BENT

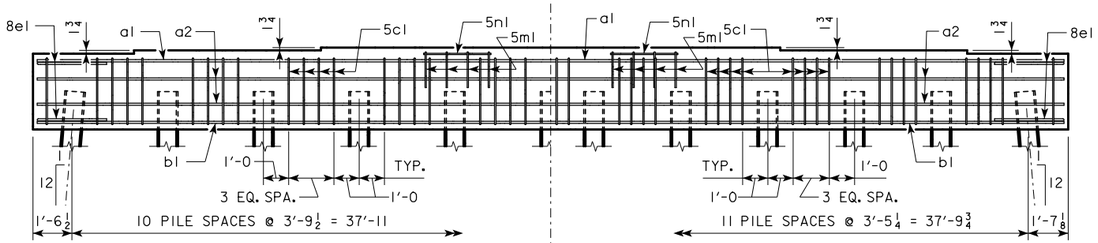

11 PILE BENT

12 PILE BENT

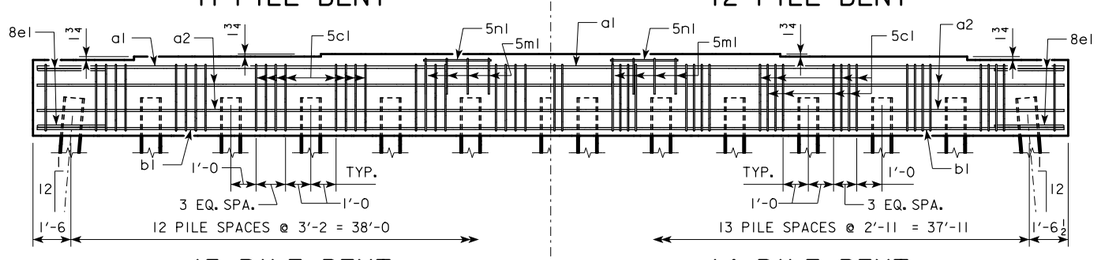

13 PILE BENT

14 PILE BENT

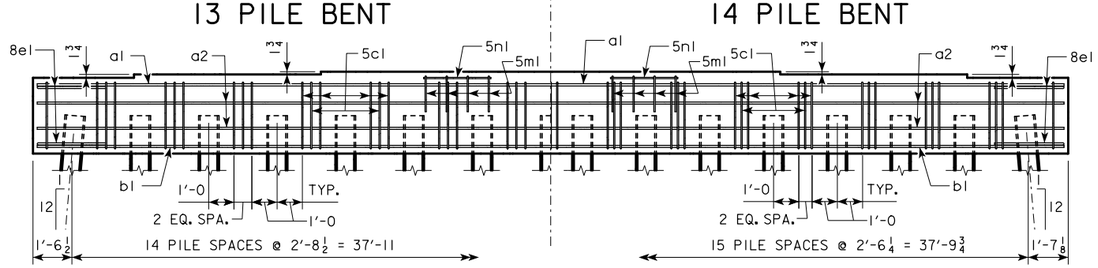

15 PILE BENT

16 PILE BENT

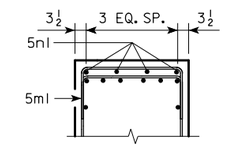

5ml & 5nl BAR LAYOUT

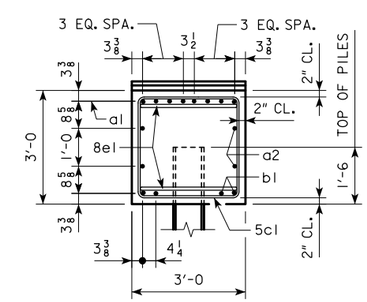

VIEW A-A
FOR 9 & 10 PILE BENTS

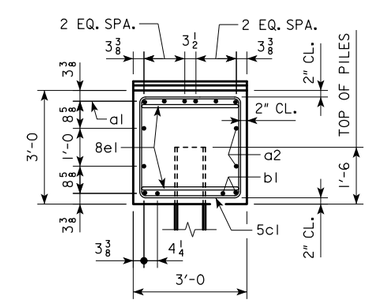

VIEW A-A
FOR 11, 12, 13, 14, 15 & 16 PILE BENTS

LATEST REVISION DATE

APPROVED BY BRIDGE ENGINEER

IOWA DOT Highway Division

STANDARD DESIGN - 40' ROADWAY, 3 SPAN BRIDGES

ROLLED STEEL BEAM BRIDGES

OCTOBER, 2014

PILE BENT PIERS

0° SKEW

RS40-096-14

PILE BENT NOTES:

THESE PIER BENTS ARE DESIGNED FOR USE IN LOCATIONS WHERE ICE AND DRIFT CONDITIONS ARE NOT SEVERE.

FOR DETAILS OF TRESTLE PILES, TYPES 1, 2 AND 3, SEE STANDARD PIOL.

MINIMUM CLEAR DISTANCE FROM FACE OF CONCRETE TO NEAR REINFORCING BAR SHALL BE 2 INCHES UNLESS OTHERWISE NOTED OR SHOWN.

PIER PILES SHALL BE DRIVEN TO VALUES SHOWN IN DESIGN PLANS.

REINFORCING BAR LIST AND ESTIMATED QUANTITIES - PER PILE BENT

			9 PILE BENT			10 PILE BENT			11 PILE BENT			12 PILE BENT			13 PILE BENT			14 PILE BENT			15 PILE BENT			16 PILE BENT		
BAR	LENGTH	SHAPE	NO.	SIZE	WEIGHT	NO.	SIZE	WEIGHT	NO.	SIZE	WEIGHT	NO.	SIZE	WEIGHT	NO.	SIZE	WEIGHT	NO.	SIZE	WEIGHT	NO.	SIZE	WEIGHT	NO.	SIZE	WEIGHT
a1	40'-8	———	8	9	1106	8	9	1106	6	9	830	6	9	830	6	9	830	6	9	830	6	9	830	6	9	830
a2	40'-8	———	4	8	434	4	8	434	4	8	434	4	8	434	4	8	434	4	8	434	4	8	434	4	8	434
b1	40'-8	———	4	9	553	4	9	553	4	9	553	4	9	553	4	9	553	4	9	553	4	9	553	4	9	553
5c1	11'-8		42	5	511	38	5	462	42	5	511	46	5	560	50	5	608	54	5	657	44	5	535	47	5	572
8e1	8'-1		4	8	86	4	8	86	4	8	86	4	8	86	4	8	86	4	8	86	4	8	86	4	8	86
5m1	5'-8		8	5	47	8	5	47	8	5	47	8	5	47	8	5	47	8	5	47	8	5	47	8	5	47
5n1	2'-10	———	8	5	24	8	5	24	8	5	24	8	5	24	8	5	24	8	5	24	8	5	24	8	5	24
REINFORCING STEEL (LB.)			2761			2712			2485			2534			2582			2631			2509			2546		
STRUCTURAL (1) CONCRETE (CY)		PILE TYPE																								
		1, 2	-----			-----			14.0			14.0			13.9			13.9			13.8			13.8		
		3	14.5			14.5			14.5			14.5			14.5			14.5			14.5			14.5		

NOTE: THE REINFORCING STEEL QUANTITY IS TO BE INCLUDED ON THE SUMMARY QUANTITIES SHEET IN THE PLAN.

NOTE: THE CONCRETE QUANTITY IS TO BE INCLUDED ON THE SUMMARY QUANTITIES SHEET IN THE PLAN.

NOTE: THE PILE TYPE IS TO BE INCLUDED ON THE SUMMARY QUANTITIES SHEET IN THE PLAN.

BENT BAR DETAILS

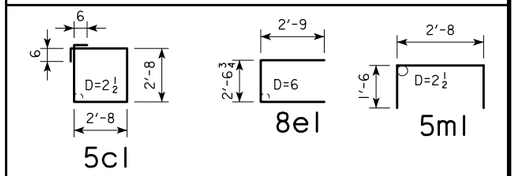

NOTE: ALL DIMENSIONS ARE OUT TO OUT. D=PIN DIAMETER.

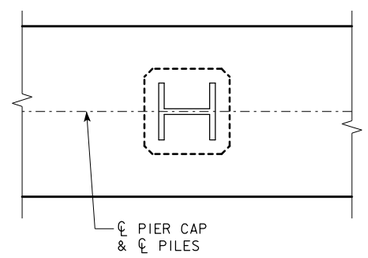

PILE ORIENTATION DETAIL FOR TYPE 3 TRESTLE BENT PILES

℄-℄ ABUTMENT BEARING	FRICTION BEARING PILING			FRICTION OR POINT BEARING PILING		
	PIOL TYPE 1 OR 2			PIOL TYPE 3		
	NUMBER OF TRESTLE PILES	(2) "K" (INCHES)	(3) LRFD Pu, STRENGTH I, DES. LOAD (KIPS)	NUMBER OF TRESTLE PILES	PILE SIZE	(3) LRFD Pu, STRENGTH I, DES. LOAD (KIPS)
160'-0	13	14	92	9	HP10x57	133
	11	16	109	9	HP12x53	133
180'-0	14	14	93	9	HP10x57	145
	12	16	109	10	HP12x53	131
200'-0	--	--	--	10	HP10x57	142
	--	--	--	11	HP12x53	129
220'-0	--	--	--	11	HP10x57	141
				12	HP12x53	129
240'-0	--	--	--	12	HP10x57	141
				13	HP12x53	130
260'-0	--	--	--	13	HP10x57	141
				14	HP12x53	131
280'-0	--	--	--	14	HP10x57	141
				15	HP12x53	131
300'-0	--	--	--	15	HP10x57	141
				16	HP12x53	132
320'-0	--	--	--	16	HP10x57	141
340'-0	--	--	--	--	--	--

(1) CONCRETE QUANTITIES SHOWN HAVE HAD THE VOLUME OF EMBEDDED PILES DEDUCTED FOR TYPES 1 AND 2 BASED ON 0.8 FT^3 PER FOOT OF EMBEDMENT. THE CONCRETE QUANTITIES FOR TYPE 3 PILES DO NOT REQUIRE REDUCTION FOR PILE EMBEDMENT.

(2) SEE STANDARD PIOL FOR "K" DIMENSION.

(3) NOTE: PU, STRENGTH I DESIGN LOAD (KIPS) IS NOT THE VALUE USED IN THE FIELD FOR DRIVING PILES.

NOTE: FRICTION BEARING INCLUDES SIDE FRICTION AND END BEARING IN SOIL. POINT BEARING INCLUDES SIDE FRICTION AND POINT BEARING IN ROCK.

LATEST REVISION DATE

APPROVED BY BRIDGE ENGINEER

IOWADOT Highway Division

STANDARD DESIGN - 40' ROADWAY, 3 SPAN BRIDGES

ROLLED STEEL BEAM BRIDGES

OCTOBER, 2014

PILE BENT PIERS

0° SKEW

RS40-097-14

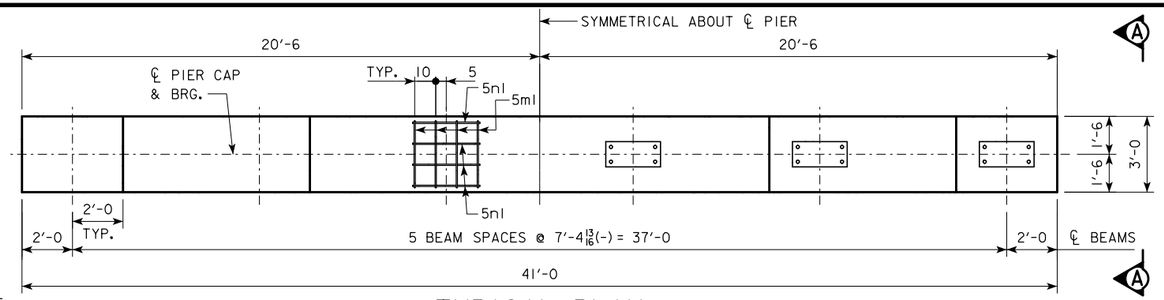

TYPICAL PLAN

NOTE:
ANCHOR BOLTS REQUIRED FOR FIXED PIER BEARINGS ONLY. FOR BOLT AND BEARING SIZES, SEE RS40-093-14, RS40-094-14 OR RS40-095-14.

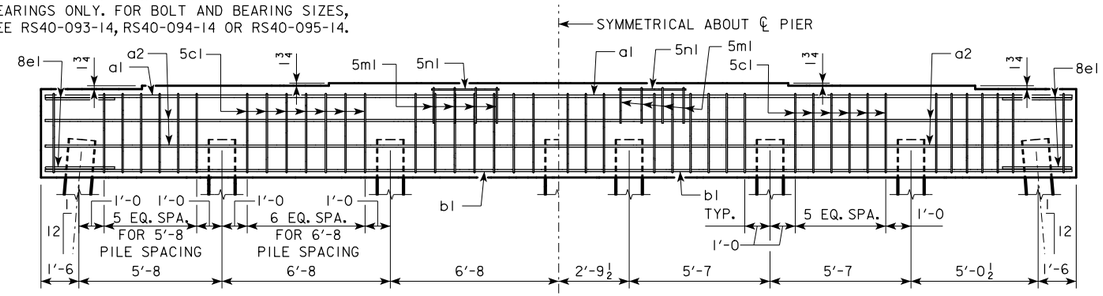

7 PILE BENT

8 PILE BENT

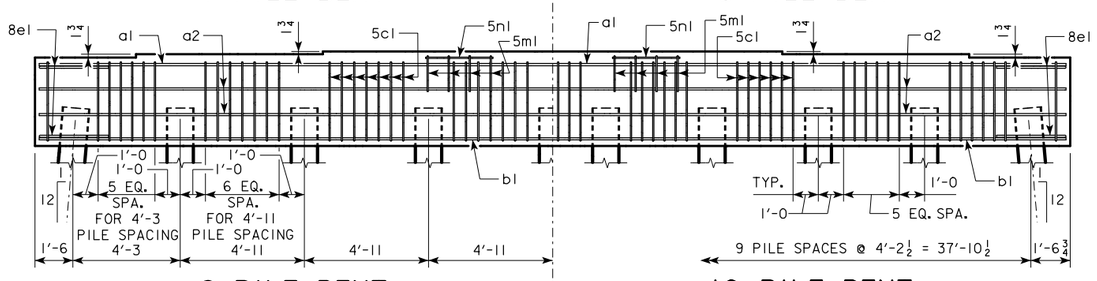

9 PILE BENT

10 PILE BENT

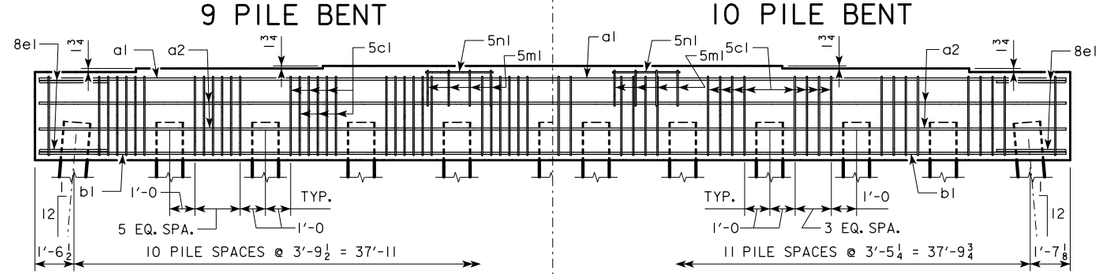

11 PILE BENT

12 PILE BENT

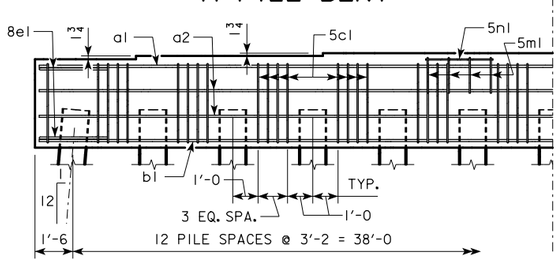

13 PILE BENT

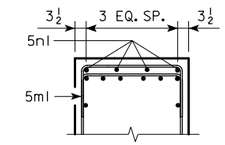

5ml & 5nl BAR LAYOUT

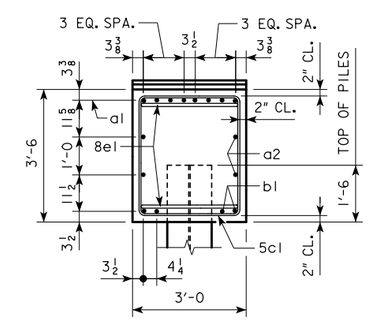

VIEW A-A
FOR 7, 8, 9, 10, 11, 12 & 13 PILE BENTS

LATEST REVISION DATE

APPROVED BY BRIDGE ENGINEER

IOWA DOT Highway Division

STANDARD DESIGN - 40' ROADWAY, 3 SPAN BRIDGES

ROLLED STEEL BEAM BRIDGES

OCTOBER, 2014

PILE BENT PIERS HP14 PILES

0° SKEW

RS40-098-14

PILE BENT NOTES:

THESE PIER BENTS ARE DESIGNED FOR USE IN LOCATIONS WHERE ICE AND DRIFT CONDITIONS ARE NOT SEVERE.

FOR DETAILS OF TRESTLE PILES, SEE STANDARD PIOL.

MINIMUM CLEAR DISTANCE FROM FACE OF CONCRETE TO NEAR REINFORCING BAR SHALL BE 2 INCHES UNLESS OTHERWISE NOTED OR SHOWN.

PIER PILES SHALL BE DRIVEN TO VALUES SHOWN IN DESIGN PLANS.

REINFORCING BAR LIST AND ESTIMATED QUANTITIES - PER PILE BENT

			7 PILE BENT			8 PILE BENT			9 PILE BENT			10 PILE BENT			11 PILE BENT			12 PILE BENT			13 PILE BENT		
BAR	LENGTH	SHAPE	NO.	SIZE	WEIGHT	NO.	SIZE	WEIGHT	NO.	SIZE	WEIGHT	NO.	SIZE	WEIGHT	NO.	SIZE	WEIGHT	NO.	SIZE	WEIGHT	NO.	SIZE	WEIGHT
a1	40'-8		8	9	1106	8	9	1106	8	9	1106	8	9	1106	8	9	1106	8	9	1106	8	9	1106
a2	40'-8		4	8	434	4	8	434	4	8	434	4	8	434	4	8	434	4	8	434	4	8	434
b1	40'-8		4	9	553	4	9	553	4	9	553	4	9	553	4	10	700	4	9	553	4	9	553
5c1	12'-8		42	5	555	44	5	581	56	5	740	56	5	740	62	5	819	46	5	608	50	5	661
8e1	8'-1		4	8	86	4	8	86	4	8	86	4	8	86	4	8	86	4	8	86	4	8	86
5m1	5'-8		8	5	47	8	5	47	8	5	47	8	5	47	8	5	47	8	5	47	8	5	47
5n1	2'-10		8	5	24	8	5	24	8	5	24	8	5	24	8	5	24	8	5	24	8	5	24
REINFORCING STEEL (LB.)			2805			2831			2990			2990			3216			2858			2911		
STRUCTURAL CONCRETE (CY)		PILE TYPE 3	16.8			16.8			16.8			16.8			16.8			16.8			16.8		

NOTE: THE REINFORCING STEEL QUANTITY IS TO BE INCLUDED ON THE SUMMARY QUANTITIES SHEET IN THE PLAN.

NOTE: THE CONCRETE QUANTITY IS TO BE INCLUDED ON THE SUMMARY QUANTITIES SHEET IN THE PLAN.

NOTE: THE PILE TYPE IS TO BE INCLUDED ON THE SUMMARY QUANTITIES SHEET IN THE PLAN.

BENT BAR DETAILS

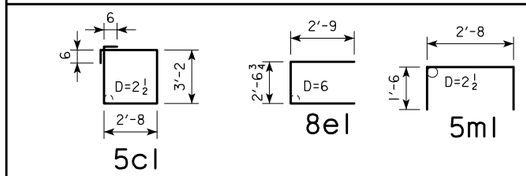

NOTE: ALL DIMENSIONS ARE OUT TO OUT. D=PIN DIAMETER.

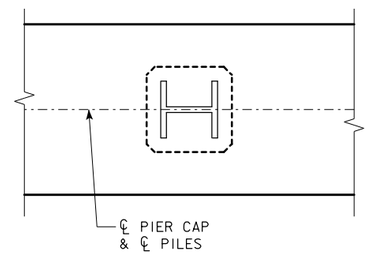

PILE ORIENTATION DETAIL FOR TYPE 3 TRESTLE BENT PILES

FRICTION OR POINT BEARING PILING

℄-℄ ABUTMENT BEARING	PIOL TYPE 3		
	NUMBER OF TRESTLE PILES	PILE SIZE	(1) LRFD Pu, STRENGTH I, DES. LOAD (KIPS)
160'-0	7	HP14x73	173
	7	HP14x89	173
180'-0	8	HP14x73	165
	7	HP14x89	189
200'-0	8	HP14x73	178
	7	HP14x89	204
220'-0	9	HP14x73	173
	7	HP14x89	223
240'-0	10	HP14x73	171
	8	HP14x89	213
260'-0	10	HP14x73	185
	9	HP14x89	205
280'-0	11	HP14x73	180
	9	HP14x89	220
300'-0	12	HP14x73	178
	10	HP14x89	213
320'-0	13	HP14x73	175
	11	HP14x89	206
340'-0	13	HP14x73	184
	11	HP14x89	217

(1) NOTE: PU, STRENGTH I DESIGN LOAD (KIPS) IS NOT THE VALUE USED IN THE FIELD FOR DRIVING PILES.

NOTE: FRICTION BEARING INCLUDES SIDE FRICTION AND END BEARING IN SOIL. POINT BEARING INCLUDES SIDE FRICTION AND POINT BEARING IN ROCK.

LATEST REVISION DATE

APPROVED BY BRIDGE ENGINEER

IOWA DOT Highway Division

STANDARD DESIGN - 40' ROADWAY, 3 SPAN BRIDGES

ROLLED STEEL BEAM BRIDGES

OCTOBER, 2014

PILE BENT PIERS
HP14 PILES
0° SKEW

RS40-099-14

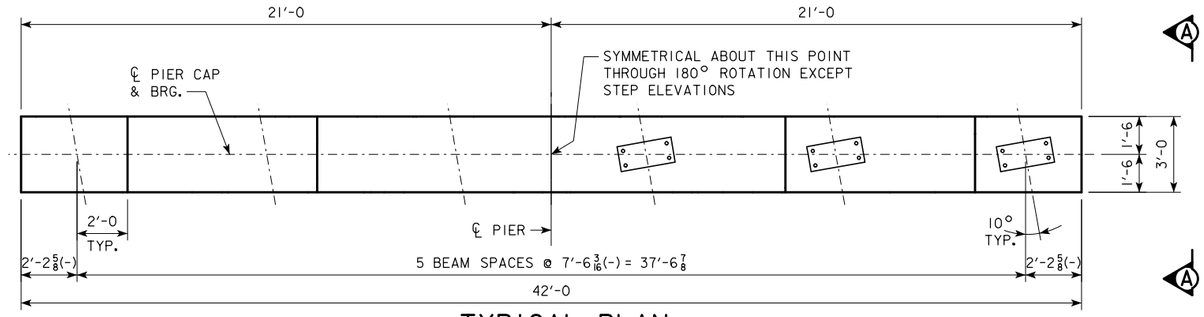

TYPICAL PLAN

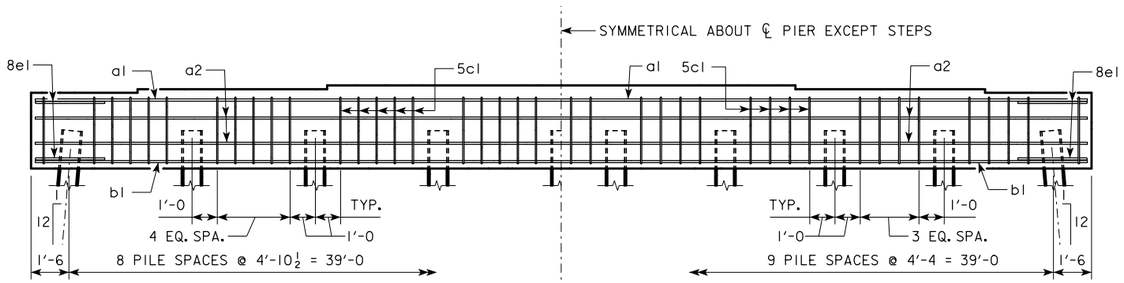

9 PILE BENT

10 PILE BENT

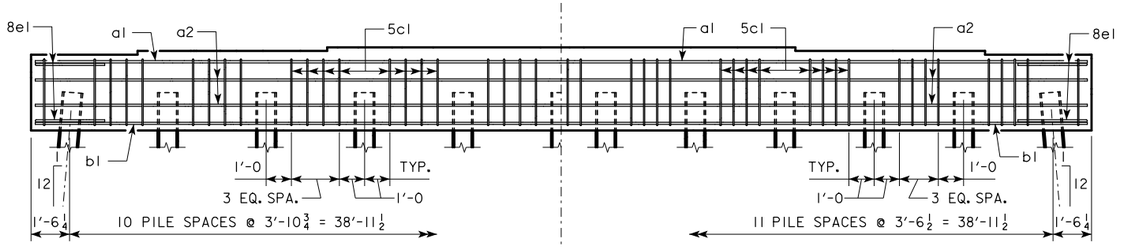

11 PILE BENT

12 PILE BENT

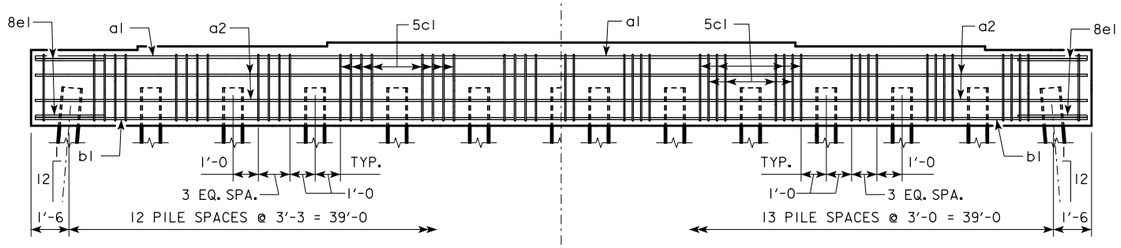

13 PILE BENT

14 PILE BENT

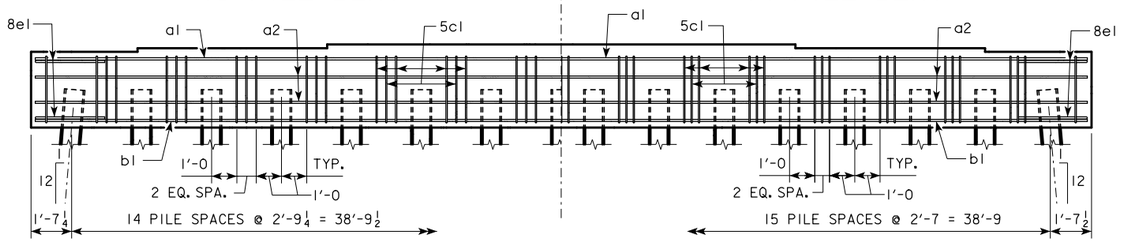

15 PILE BENT

16 PILE BENT

NOTE:
THE HEIGHT OF THE STEPS ON THE BRIDGE SEAT IS EQUAL TO THE DIFFERENCE IN ELEVATIONS OF THE TOP OF SLAB AT ADJACENT BEAMS ALONG ℄ PIER.
ANCHOR BOLTS REQUIRED FOR FIXED PIER BEARINGS ONLY. FOR BOLT AND BEARING SIZES, SEE RS40-093-14, RS40-094-14 OR RS40-095-14.

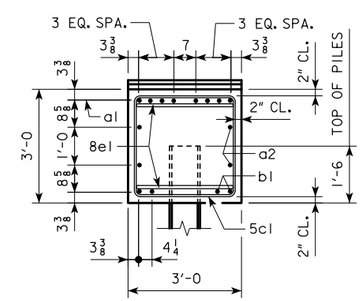

VIEW A-A
FOR 9 PILE BENT

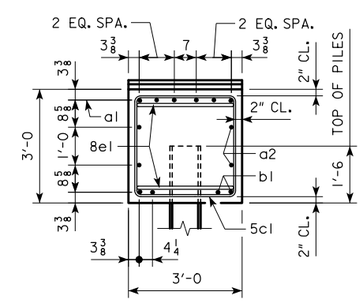

VIEW A-A
FOR 10, 11, 12, 13, 14, 15 & 16 PILE BENTS

LATEST REVISION DATE

APPROVED BY BRIDGE ENGINEER

IOWA DOT Highway Division

STANDARD DESIGN - 40' ROADWAY, 3 SPAN BRIDGES

ROLLED STEEL BEAM BRIDGES

OCTOBER, 2014

PILE BENT PIERS

10° SKEW

RS40-100-14

PILE BENT NOTES:

THESE PIER BENTS ARE DESIGNED FOR USE IN LOCATIONS WHERE ICE AND DRIFT CONDITIONS ARE NOT SEVERE.

FOR DETAILS OF TRESTLE PILES, TYPES 1, 2 AND 3, SEE STANDARD PIOL.

MINIMUM CLEAR DISTANCE FROM FACE OF CONCRETE TO NEAR REINFORCING BAR SHALL BE 2 INCHES UNLESS OTHERWISE NOTED OR SHOWN.

PIER PILES SHALL BE DRIVEN TO VALUES SHOWN IN DESIGN PLANS.

REINFORCING BAR LIST AND ESTIMATED QUANTITIES - PER PILE BENT

			9 PILE BENT			10 PILE BENT			11 PILE BENT			12 PILE BENT			13 PILE BENT			14 PILE BENT			15 PILE BENT			16 PILE BENT		
BAR	LENGTH	SHAPE	NO.	SIZE	WEIGHT	NO.	SIZE	WEIGHT	NO.	SIZE	WEIGHT	NO.	SIZE	WEIGHT	NO.	SIZE	WEIGHT	NO.	SIZE	WEIGHT	NO.	SIZE	WEIGHT	NO.	SIZE	WEIGHT
a1	41'-8	———	8	9	1133	6	9	850	6	9	850	6	9	850	6	9	850	6	9	850	6	9	850	6	9	850
a2	41'-8	———	4	8	445	4	8	445	4	8	445	4	8	445	4	8	445	4	8	445	4	8	445	4	8	445
b1	41'-8	———	4	9	567	4	9	567	4	9	567	4	9	567	4	9	567	4	9	567	4	9	567	4	9	567
5c1	11'-8	⊏⊐	42	5	511	38	5	462	42	5	511	46	5	560	50	5	608	54	5	657	44	5	535	47	5	572
8e1	8'-1	⊏⊐	4	8	86	4	8	86	4	8	86	4	8	86	4	8	86	4	8	86	4	8	86	4	8	86
(1) REINFORCING STEEL (LB.)			2742			2410			2459			2508			2556			2605			2483			2520		
STRUCTURAL (2) CONCRETE (CY)		PILE TYPE 1, 2	-----			-----			14.4			14.4			14.3			14.3			14.2			14.2		
		PILE TYPE 3	14.9			14.9			14.9			14.9			14.9			14.9			14.9			14.9		

NOTE: THE REINFORCING STEEL QUANTITY IS TO BE INCLUDED ON THE SUMMARY QUANTITIES SHEET IN THE PLAN.

NOTE: THE CONCRETE QUANTITY IS TO BE INCLUDED ON THE SUMMARY QUANTITIES SHEET IN THE PLAN.

NOTE: THE PILE TYPE IS TO BE INCLUDED ON THE SUMMARY QUANTITIES SHEET IN THE PLAN.

BENT BAR DETAILS

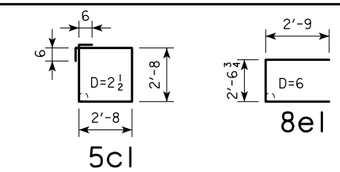

NOTE: ALL DIMENSIONS ARE OUT TO OUT. D=PIN DIAMETER.

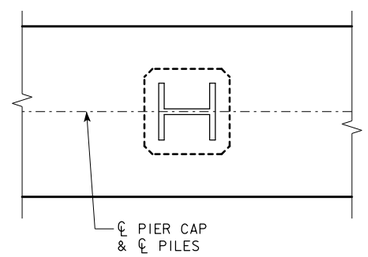

PILE ORIENTATION DETAIL FOR TYPE 3 TRESTLE BENT PILES

℄-℄ ABUTMENT BEARING	FRICTION BEARING PILING — PIOL TYPE 1 OR 2			FRICTION OR POINT BEARING PILING — PIOL TYPE 3		
	NUMBER OF TRESTLE PILES	(3) "K" (INCHES)	(3) LRFD Pu, STRENGTH 1, DES. LOAD (KIPS)	NUMBER OF TRESTLE PILES	PILE SIZE	(4) LRFD Pu, STRENGTH 1, DES. LOAD (KIPS)
160'-0	13	14	92	9	HP10x57	133
	11	16	109	9	HP12x53	133
180'-0	14	14	94	9	HP10x57	146
	12	16	109	10	HP12x53	131
200'-0	--	--	--	10	HP10x57	142
	--	--	--	11	HP12x53	129
220'-0	--	--	--	11	HP10x57	141
				12	HP12x53	129
240'-0	--	--	--	12	HP10x57	142
				13	HP12x53	131
260'-0	--	--	--	13	HP10x57	141
				14	HP12x53	131
280'-0	--	--	--	14	HP10x57	141
				15	HP12x53	132
300'-0	--	--	--	15	HP10x57	141
				16	HP12x53	133
320'-0	--	--	--	16	HP10x57	141
340'-0	--	--	--	--	--	--

(1) SEE SHEET RS40-166-14 FOR STEP REINFORCING STEEL QUANTITIES AND DETAILS.

(2) CONCRETE QUANTITIES SHOWN HAVE HAD THE VOLUME OF EMBEDDED PILES DEDUCTED FOR TYPES 1 AND 2 BASED ON 0.8 FT^3 PER FOOT OF EMBEDMENT. THE CONCRETE QUANTITIES FOR TYPE 3 PILES DO NOT REQUIRE REDUCTION FOR PILE EMBEDMENT.

(3) SEE STANDARD PIOL FOR "K" DIMENSION.

(4) NOTE: PU, STRENGTH 1 DESIGN LOAD (KIPS) IS NOT THE VALUE USED IN THE FIELD FOR DRIVING PILES.

NOTE: FRICTION BEARING INCLUDES SIDE FRICTION AND END BEARING IN SOIL. POINT BEARING INCLUDES SIDE FRICTION AND POINT BEARING IN ROCK.

LATEST REVISION DATE

APPROVED BY BRIDGE ENGINEER

IOWA DOT Highway Division

STANDARD DESIGN - 40' ROADWAY, 3 SPAN BRIDGES

ROLLED STEEL BEAM BRIDGES

OCTOBER, 2014

PILE BENT PIERS

10° SKEW

RS40-101-14

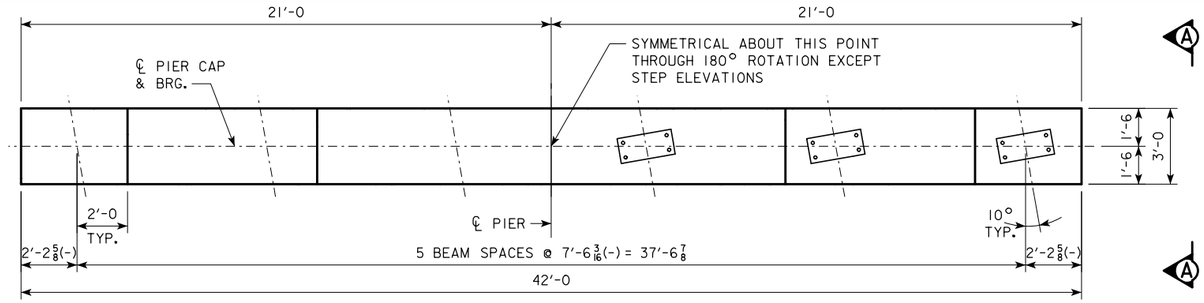

TYPICAL PLAN

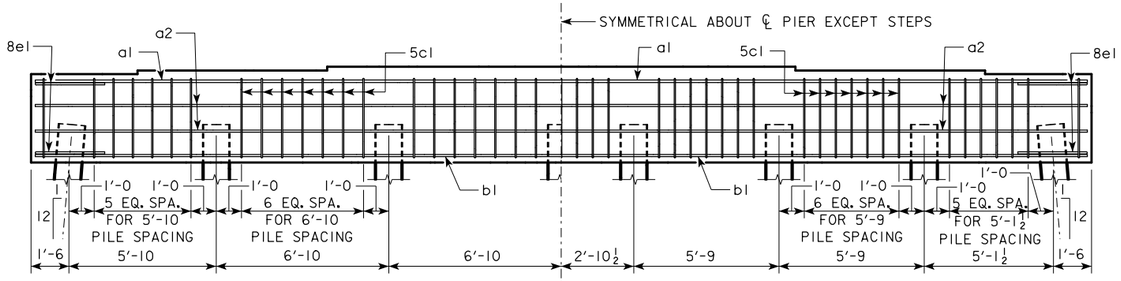

7 PILE BENT 8 PILE BENT

NOTE:
THE HEIGHT OF THE STEPS ON THE BRIDGE SEAT IS EQUAL TO THE DIFFERENCE IN ELEVATIONS OF THE TOP OF SLAB AT ADJACENT BEAMS ALONG ℄ PIER.
ANCHOR BOLTS REQUIRED FOR FIXED PIER BEARINGS ONLY. FOR BOLT AND BEARING SIZES, SEE RS40-093-14, RS40-094-14 OR RS40-095-14.

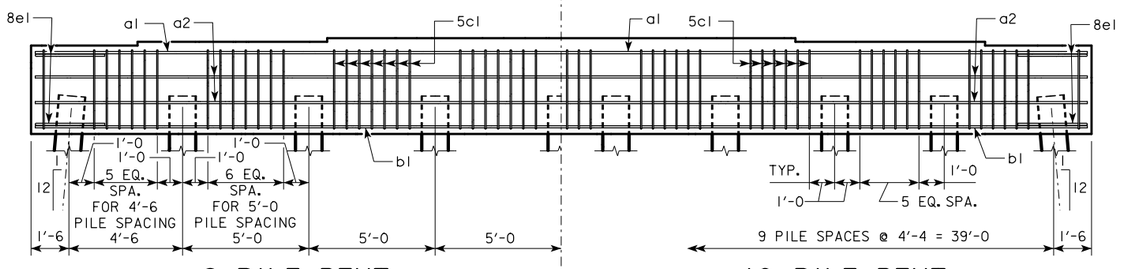

9 PILE BENT 10 PILE BENT

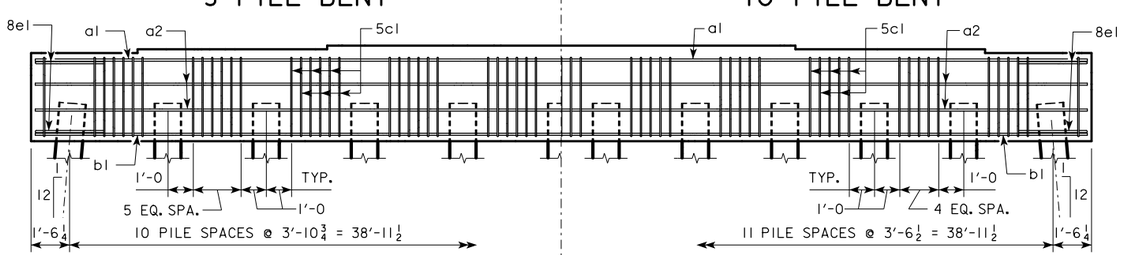

11 PILE BENT 12 PILE BENT

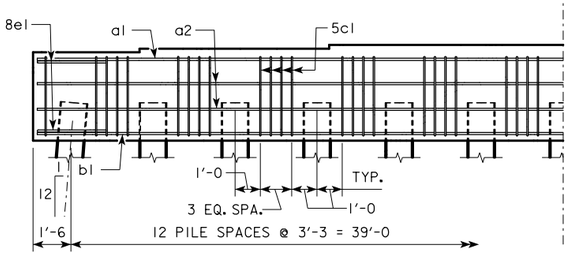

13 PILE BENT

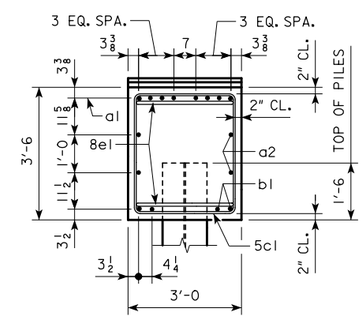

VIEW A-A
FOR 7, 8, 9, 10 & 11 PILE BENTS

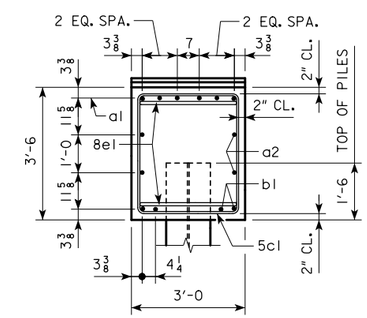

VIEW A-A
FOR 12 & 13 PILE BENTS

LATEST REVISION DATE

APPROVED BY BRIDGE ENGINEER

IOWA DOT Highway Division

STANDARD DESIGN - 40' ROADWAY, 3 SPAN BRIDGES

ROLLED STEEL BEAM BRIDGES

OCTOBER, 2014

PILE BENT PIERS HP14 PILES

10° SKEW

RS40-102-14

PILE BENT NOTES:

THESE PIER BENTS ARE DESIGNED FOR USE IN LOCATIONS WHERE ICE AND DRIFT CONDITIONS ARE NOT SEVERE.

FOR DETAILS OF TRESTLE PILES, SEE STANDARD PIOL.

MINIMUM CLEAR DISTANCE FROM FACE OF CONCRETE TO NEAR REINFORCING BAR SHALL BE 2 INCHES UNLESS OTHERWISE NOTED OR SHOWN.

PIER PILES SHALL BE DRIVEN TO VALUES SHOWN IN DESIGN PLANS.

REINFORCING BAR LIST AND ESTIMATED QUANTITIES - PER PILE BENT

			7 PILE BENT			8 PILE BENT			9 PILE BENT			10 PILE BENT			11 PILE BENT			12 PILE BENT			13 PILE BENT		
BAR	LENGTH	SHAPE	NO.	SIZE	WEIGHT	NO.	SIZE	WEIGHT	NO.	SIZE	WEIGHT	NO.	SIZE	WEIGHT	NO.	SIZE	WEIGHT	NO.	SIZE	WEIGHT	NO.	SIZE	WEIGHT
a1	41'-8		8	9	1133	8	9	1133	8	9	1133	8	9	1133	8	9	1133	6	9	850	6	9	850
a2	41'-8		4	8	445	4	8	445	4	8	445	4	8	445	4	8	445	4	8	445	4	8	445
b1	41'-8		4	9	567	4	10	717	4	9	567	4	9	567	4	10	717	4	9	567	4	9	567
5c1	12'-8		42	5	555	49	5	647	56	5	740	56	5	740	62	5	819	57	5	753	50	5	661
8e1	8'-1		4	8	86	4	8	86	4	8	86	4	8	86	4	8	86	4	8	86	4	8	86
(1) REINFORCING STEEL (LB.)			2786			3028			2971			2971			3200			2701			2609		
STRUCTURAL CONCRETE (CY)		PILE TYPE 3	17.2			17.2			17.2			17.2			17.2			17.2			17.2		

NOTE: THE REINFORCING STEEL QUANTITY IS TO BE INCLUDED ON THE SUMMARY QUANTITIES SHEET IN THE PLAN.

NOTE: THE CONCRETE QUANTITY IS TO BE INCLUDED ON THE SUMMARY QUANTITIES SHEET IN THE PLAN.

NOTE: THE PILE TYPE IS TO BE INCLUDED ON THE SUMMARY QUANTITIES SHEET IN THE PLAN.

BENT BAR DETAILS

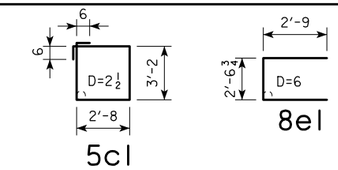

NOTE: ALL DIMENSIONS ARE OUT TO OUT. D=PIN DIAMETER.

FRICTION OR POINT BEARING PILING

℄-℄ ABUTMENT BEARING	PIOL TYPE 3		
	NUMBER OF TRESTLE PILES	PILE SIZE	(2) LRFD Pu, STRENGTH I, DES. LOAD (KIPS)
160'-0	7	HP14x73	173
	7	HP14x89	173
180'-0	8	HP14x73	165
	7	HP14x89	189
200'-0	8	HP14x73	179
	7	HP14x89	204
220'-0	9	HP14x73	174
	7	HP14x89	223
240'-0	10	HP14x73	171
	8	HP14x89	214
260'-0	10	HP14x73	185
	9	HP14x89	205
280'-0	11	HP14x73	180
	9	HP14x89	221
300'-0	12	HP14x73	178
	10	HP14x89	213
320'-0	13	HP14x73	175
	11	HP14x89	207
340'-0	13	HP14x73	184
	11	HP14x89	218

(1) SEE SHEET RS40-166-14 FOR STEP REINFORCING STEEL QUANTITIES AND DETAILS.

(2) NOTE: PU, STRENGTH I DESIGN LOAD (KIPS) IS NOT THE VALUE USED IN THE FIELD FOR DRIVING PILES.

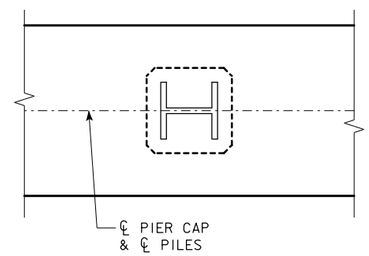

PILE ORIENTATION DETAIL FOR TYPE 3 TRESTLE BENT PILES

NOTE: FRICTION BEARING INCLUDES SIDE FRICTION AND END BEARING IN SOIL. POINT BEARING INCLUDES SIDE FRICTION AND POINT BEARING IN ROCK.

LATEST REVISION DATE

APPROVED BY BRIDGE ENGINEER

IOWA DOT Highway Division

STANDARD DESIGN - 40' ROADWAY, 3 SPAN BRIDGES

ROLLED STEEL BEAM BRIDGES

OCTOBER, 2014

PILE BENT PIERS
HP14 PILES
10° SKEW

RS40-103-14

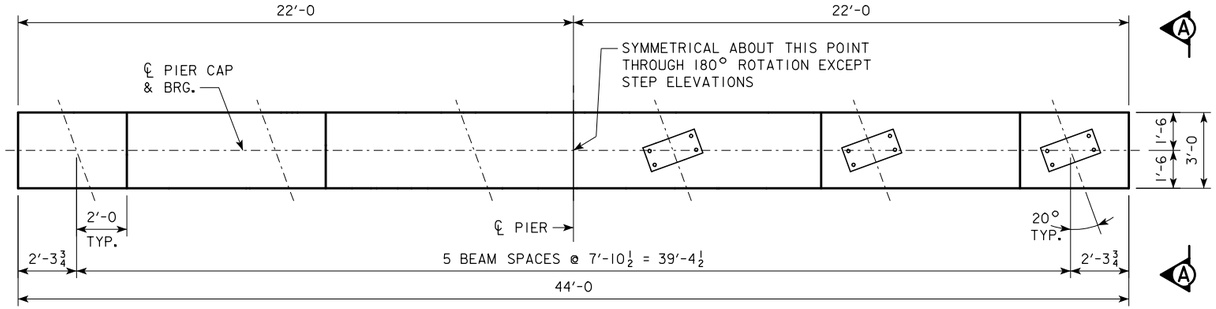

TYPICAL PLAN

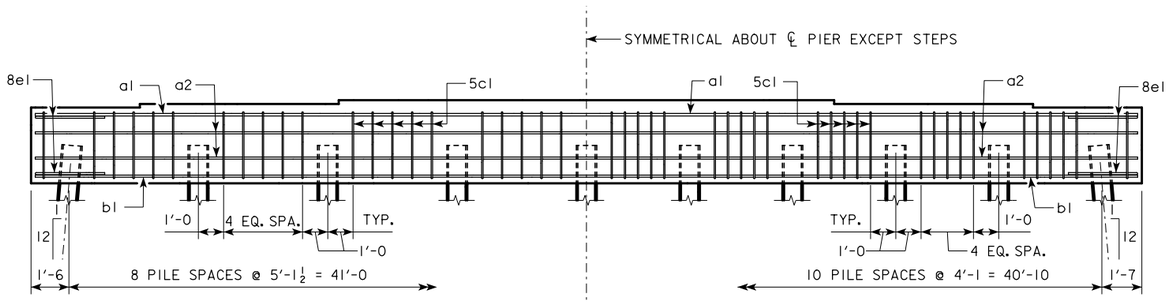

9 PILE BENT

11 PILE BENT

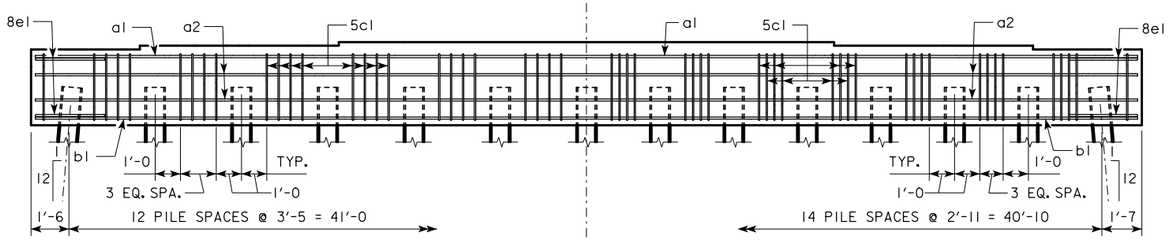

13 PILE BENT

15 PILE BENT

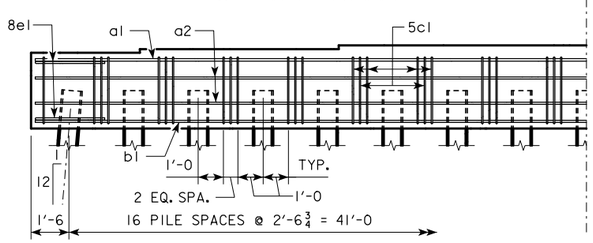

17 PILE BENT

NOTE:
THE HEIGHT OF THE STEPS ON THE BRIDGE SEAT IS EQUAL TO THE DIFFERENCE IN ELEVATIONS OF THE TOP OF SLAB AT ADJACENT BEAMS ALONG ℄ PIER.
ANCHOR BOLTS REQUIRED FOR FIXED PIER BEARINGS ONLY. FOR BOLT AND BEARING SIZES, SEE RS40-093-14, RS40-094-14 OR RS40-095-14.

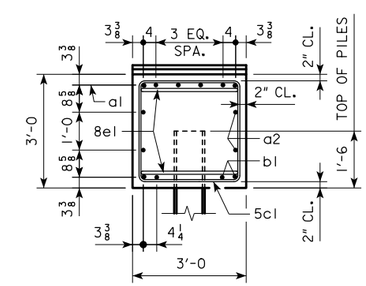

VIEW A-A
FOR 9, 11, 13, 15 & 17 PILE BENTS

LATEST REVISION DATE

APPROVED BY BRIDGE ENGINEER

IOWA DOT Highway Division

STANDARD DESIGN - 40' ROADWAY, 3 SPAN BRIDGES

ROLLED STEEL BEAM BRIDGES

OCTOBER, 2014

PILE BENT PIERS

20° SKEW

RS40-104-14

PILE BENT NOTES:

THESE PIER BENTS ARE DESIGNED FOR USE IN LOCATIONS WHERE ICE AND DRIFT CONDITIONS ARE NOT SEVERE.

FOR DETAILS OF TRESTLE PILES, TYPES 1, 2 AND 3, SEE STANDARD PIOL.

MINIMUM CLEAR DISTANCE FROM FACE OF CONCRETE TO NEAR REINFORCING BAR SHALL BE 2 INCHES UNLESS OTHERWISE NOTED OR SHOWN.

PIER PILES SHALL BE DRIVEN TO VALUES SHOWN IN DESIGN PLANS.

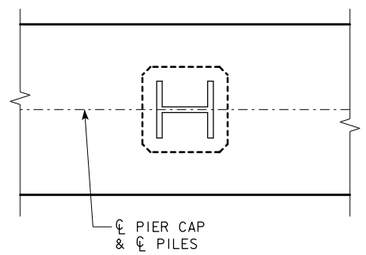

PILE ORIENTATION DETAIL FOR TYPE 3 TRESTLE BENT PILES

REINFORCING BAR LIST AND ESTIMATED QUANTITIES - PER PILE BENT

			9 PILE BENT			11 PILE BENT			13 PILE BENT			15 PILE BENT			17 PILE BENT		
BAR	LENGTH	SHAPE	NO.	SIZE	WEIGHT	NO.	SIZE	WEIGHT	NO.	SIZE	WEIGHT	NO.	SIZE	WEIGHT	NO.	SIZE	WEIGHT
a1	43'-8		6	9	891	6	9	891	6	9	891	6	9	891	6	9	891
a2	43'-8		4	8	466	4	8	466	4	8	466	4	8	466	4	8	466
b1	43'-8		4	9	594	4	9	594	4	9	594	4	9	594	4	9	594
5c1	11'-8		42	5	511	52	5	633	50	5	608	58	5	706	50	5	608
8e1	8'-1		4	8	86	4	8	86	4	8	86	4	8	86	4	8	86
(1) REINFORCING STEEL (LB.)			2548			2670			2645			2743			2645		
STRUCTURAL (2) CONCRETE (CY)		PILE TYPE															
		1, 2	-----			15.2			15.1			15.0			14.9		
		3	15.7			15.7			15.7			15.7			15.7		

NOTE: THE REINFORCING STEEL QUANTITY IS TO BE INCLUDED ON THE SUMMARY QUANTITIES SHEET IN THE PLAN.

NOTE: THE CONCRETE QUANTITY IS TO BE INCLUDED ON THE SUMMARY QUANTITIES SHEET IN THE PLAN.

NOTE: THE PILE TYPE IS TO BE INCLUDED ON THE SUMMARY QUANTITIES SHEET IN THE PLAN.

BENT BAR DETAILS

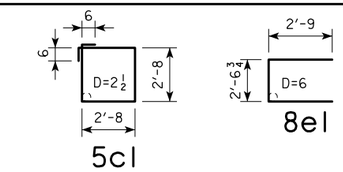

NOTE: ALL DIMENSIONS ARE OUT TO OUT. D=PIN DIAMETER.

℄-℄ ABUTMENT BEARING	FRICTION BEARING PILING			FRICTION OR POINT BEARING PILING		
	PIOL TYPE 1 OR 2			PIOL TYPE 3		
	NUMBER OF TRESTLE PILES	(3) "K" (INCHES)	(4) LRFD Pu, STRENGTH I, DES. LOAD (KIPS)	NUMBER OF TRESTLE PILES	PILE SIZE	(4) LRFD Pu, STRENGTH I, DES. LOAD (KIPS)
160'-0	13	14	93	9	HP10x57	134
	11	16	109	9	HP12x53	134
180'-0	15	14	88	11	HP10x57	119
	13	16	101	11	HP12x53	119
200'-0	15	14	95	11	HP10x57	129
	13	16	109	11	HP12x53	129
220'-0	--	--	--	11	HP10x57	141
	--	--	--	13	HP12x53	120
240'-0	--	--	--	13	HP10x57	131
				13	HP12x53	131
260'-0	--	--	--	13	HP10x57	142
				15	HP12x53	123
280'-0	--	--	--	15	HP10x57	132
				15	HP12x53	132
300'-0	--	--	--	15	HP10x57	142
				17	HP12x53	125
320'-0	--	--	--	17	HP10x57	133
				17	HP12x53	133
340'-0	--	--	--	17	HP10x57	140

(1) SEE SHEET RS40-167-14 FOR STEP REINFORCING STEEL QUANTITIES AND DETAILS.

(2) CONCRETE QUANTITIES SHOWN HAVE HAD THE VOLUME OF EMBEDDED PILES DEDUCTED FOR TYPES 1 AND 2 BASED ON 0.8 FT^3 PER FOOT OF EMBEDMENT. THE CONCRETE QUANTITIES FOR TYPE 3 PILES DO NOT REQUIRE REDUCTION FOR PILE EMBEDMENT.

(3) SEE STANDARD PIOL FOR "K" DIMENSION.

(4) NOTE: PU, STRENGTH I DESIGN LOAD (KIPS) IS NOT THE VALUE USED IN THE FIELD FOR DRIVING PILES.

NOTE: FRICTION BEARING INCLUDES SIDE FRICTION AND END BEARING IN SOIL. POINT BEARING INCLUDES SIDE FRICTION AND POINT BEARING IN ROCK.

LATEST REVISION DATE

APPROVED BY BRIDGE ENGINEER

IOWA DOT Highway Division

STANDARD DESIGN - 40' ROADWAY, 3 SPAN BRIDGES

ROLLED STEEL BEAM BRIDGES

OCTOBER, 2014

PILE BENT PIERS

20° SKEW

RS40-105-14

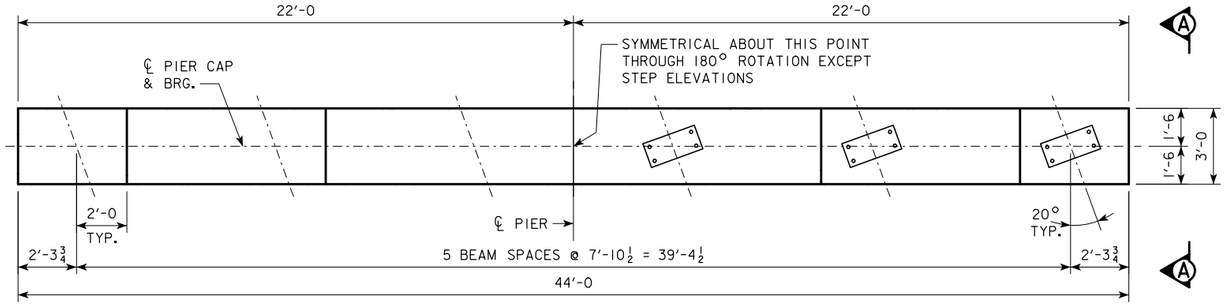

TYPICAL PLAN

NOTE:
THE HEIGHT OF THE STEPS ON THE BRIDGE SEAT IS EQUAL TO THE DIFFERENCE IN ELEVATIONS OF THE TOP OF SLAB AT ADJACENT BEAMS ALONG ℄ PIER.
ANCHOR BOLTS REQUIRED FOR FIXED PIER BEARINGS ONLY. FOR BOLT AND BEARING SIZES, SEE RS40-093-14, RS40-094-14 OR RS40-095-14.

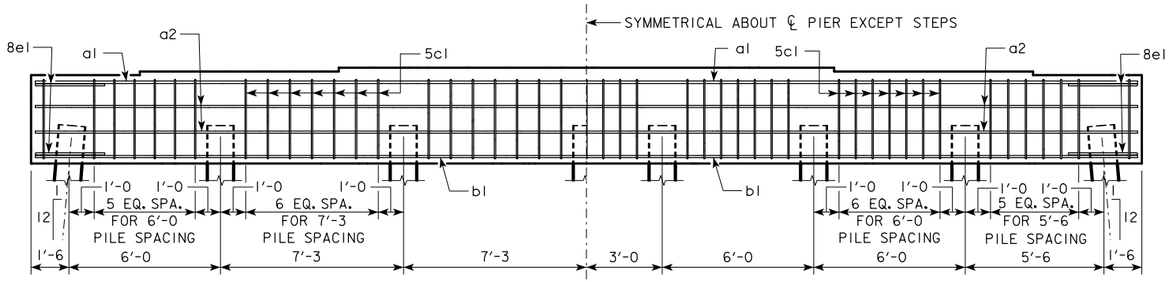

7 PILE BENT

8 PILE BENT

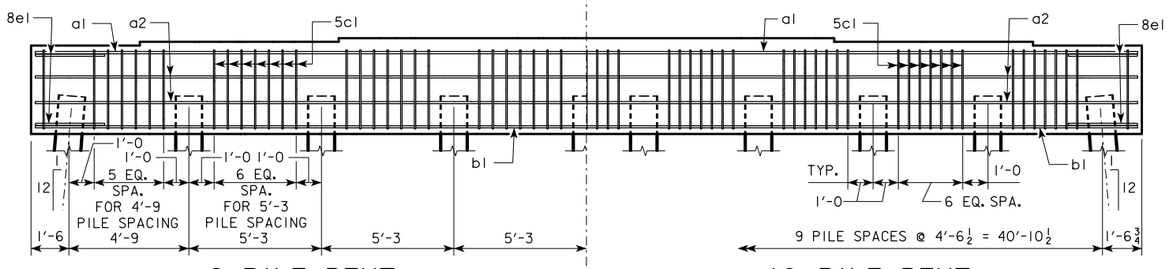

9 PILE BENT

10 PILE BENT

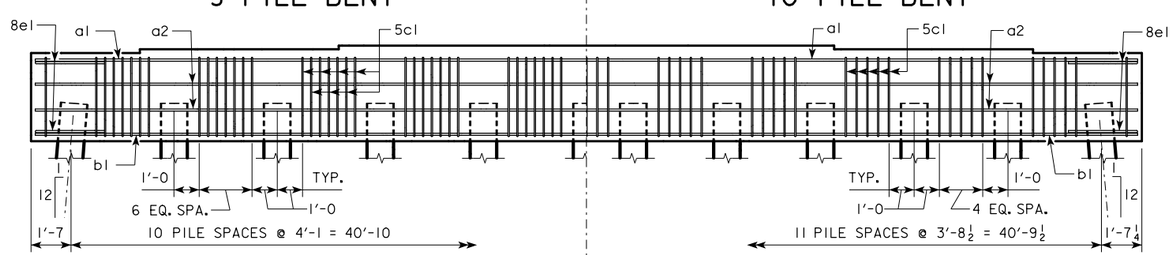

11 PILE BENT

12 PILE BENT

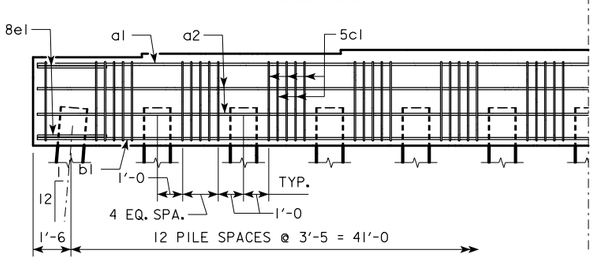

13 PILE BENT

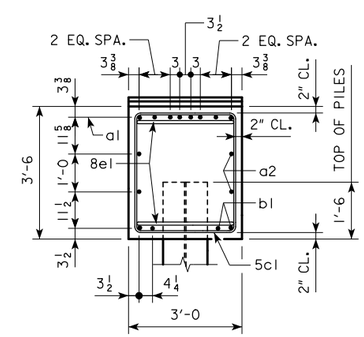

VIEW A-A
FOR 7, 8, 9, 10, 11, 12 & 13 PILE BENTS

LATEST REVISION DATE

APPROVED BY BRIDGE ENGINEER

IOWA DOT Highway Division

STANDARD DESIGN - 40' ROADWAY, 3 SPAN BRIDGES

ROLLED STEEL BEAM BRIDGES

OCTOBER, 2014

PILE BENT PIERS
HP14 PILES
20° SKEW

RS40-106-14

PILE BENT NOTES:

THESE PIER BENTS ARE DESIGNED FOR USE IN LOCATIONS WHERE ICE AND DRIFT CONDITIONS ARE NOT SEVERE.

FOR DETAILS OF TRESTLE PILES, SEE STANDARD PIOL.

MINIMUM CLEAR DISTANCE FROM FACE OF CONCRETE TO NEAR REINFORCING BAR SHALL BE 2 INCHES UNLESS OTHERWISE NOTED OR SHOWN.

PIER PILES SHALL BE DRIVEN TO VALUES SHOWN IN DESIGN PLANS.

REINFORCING BAR LIST AND ESTIMATED QUANTITIES - PER PILE BENT

			7 PILE BENT			8 PILE BENT			9 PILE BENT			10 PILE BENT			11 PILE BENT			12 PILE BENT			13 PILE BENT		
BAR	LENGTH	SHAPE	NO.	SIZE	WEIGHT	NO.	SIZE	WEIGHT	NO.	SIZE	WEIGHT	NO.	SIZE	WEIGHT	NO.	SIZE	WEIGHT	NO.	SIZE	WEIGHT	NO.	SIZE	WEIGHT
a1	43'-8		8	9	1188	8	9	1188	8	9	1188	8	9	1188	8	9	1188	8	9	1188	8	9	1188
a2	43'-8		4	8	466	4	8	466	4	8	466	4	8	466	4	8	466	4	8	466	4	8	466
b1	43'-8		4	10	752	4	10	752	4	10	752	4	10	752	4	10	752	4	9	594	4	9	594
5c1	12'-8		42	5	555	49	5	647	56	5	740	65	5	859	72	5	951	57	5	753	62	5	819
8e1	8'-1		4	8	86	4	8	86	4	8	86	4	8	86	4	8	86	4	8	86	4	8	86
(1) REINFORCING STEEL (LB.)			3047			3139			3232			3351			3443			3087			3153		
STRUCTURAL CONCRETE (CY)		PILE TYPE 3	18.1			18.1			18.1			18.1			18.1			18.1			18.1		

NOTE: THE REINFORCING STEEL QUANTITY IS TO BE INCLUDED ON THE SUMMARY QUANTITIES SHEET IN THE PLAN.

NOTE: THE CONCRETE QUANTITY IS TO BE INCLUDED ON THE SUMMARY QUANTITIES SHEET IN THE PLAN.

NOTE: THE PILE TYPE IS TO BE INCLUDED ON THE SUMMARY QUANTITIES SHEET IN THE PLAN.

BENT BAR DETAILS

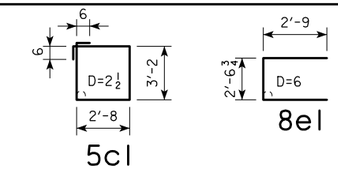

NOTE: ALL DIMENSIONS ARE OUT TO OUT. D=PIN DIAMETER.

FRICTION OR POINT BEARING PILING

℄-℄ ABUTMENT BEARING	PIOL TYPE 3		
	NUMBER OF TRESTLE PILES	PILE SIZE	(2) LRFD Pu, STRENGTH I, DES. LOAD (KIPS)
160'-0	7	HP14x73	174
	7	HP14x89	174
180'-0	8	HP14x73	166
	7	HP14x89	189
200'-0	8	HP14x73	179
	7	HP14x89	205
220'-0	9	HP14x73	174
	7	HP14x89	224
240'-0	10	HP14x73	171
	8	HP14x89	214
260'-0	10	HP14x73	185
	9	HP14x89	206
280'-0	11	HP14x73	181
	9	HP14x89	221
300'-0	12	HP14x73	178
	10	HP14x89	214
320'-0	13	HP14x73	175
	11	HP14x89	207
340'-0	13	HP14x73	184
	11	HP14x89	218

(1) SEE SHEET RS40-167-14 FOR STEP REINFORCING STEEL QUANTITIES AND DETAILS.

(2) NOTE: PU, STRENGTH I DESIGN LOAD (KIPS) IS NOT THE VALUE USED IN THE FIELD FOR DRIVING PILES.

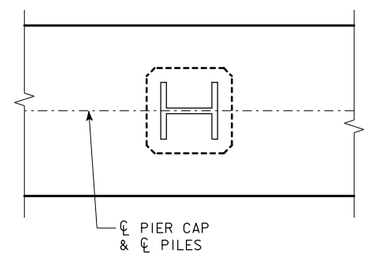

PILE ORIENTATION DETAIL FOR TYPE 3 TRESTLE BENT PILES

NOTE: FRICTION BEARING INCLUDES SIDE FRICTION AND END BEARING IN SOIL. POINT BEARING INCLUDES SIDE FRICTION AND POINT BEARING IN ROCK.

LATEST REVISION DATE

APPROVED BY BRIDGE ENGINEER

IOWA DOT Highway Division

STANDARD DESIGN - 40' ROADWAY, 3 SPAN BRIDGES

ROLLED STEEL BEAM BRIDGES

OCTOBER, 2014

PILE BENT PIERS
HP14 PILES
20° SKEW

RS40-107-14

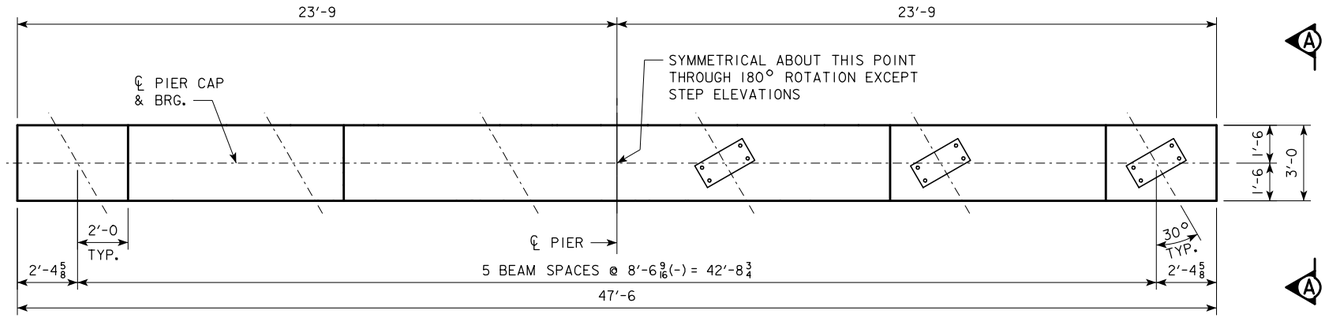

TYPICAL PLAN

NOTE:
THE HEIGHT OF THE STEPS ON THE BRIDGE SEAT IS EQUAL TO THE DIFFERENCE IN ELEVATIONS OF THE TOP OF SLAB AT ADJACENT BEAMS ALONG ℄ PIER.
ANCHOR BOLTS REQUIRED FOR FIXED PIER BEARINGS ONLY. FOR BOLT AND BEARING SIZES, SEE RS40-093-14, RS40-094-14 OR RS40-095-14.

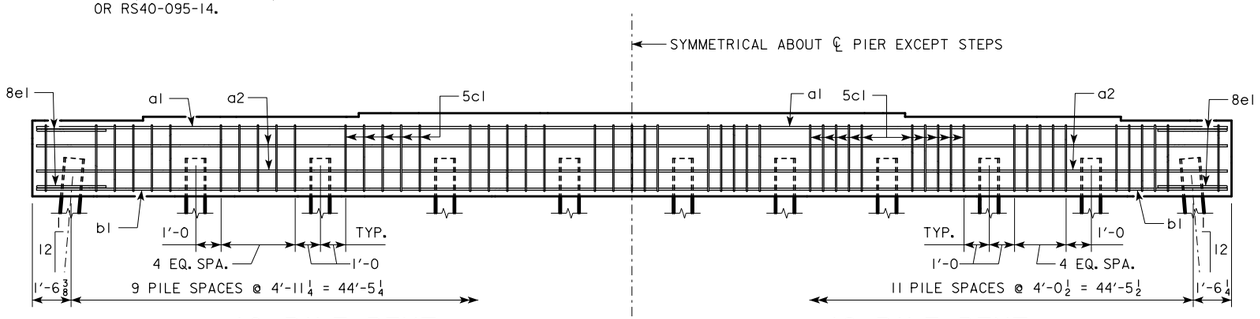

10 PILE BENT

12 PILE BENT

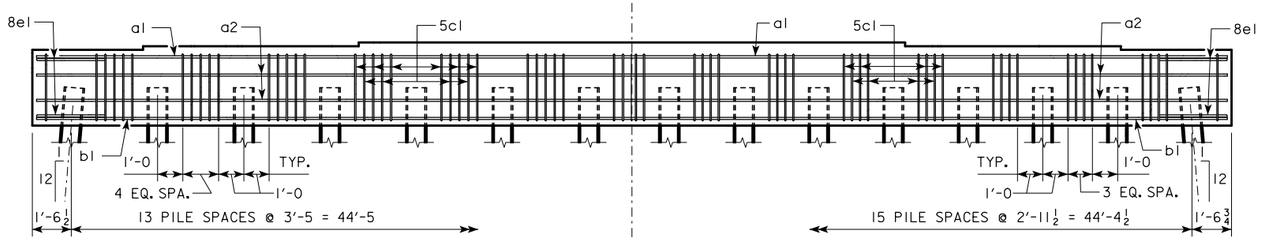

14 PILE BENT

16 PILE BENT

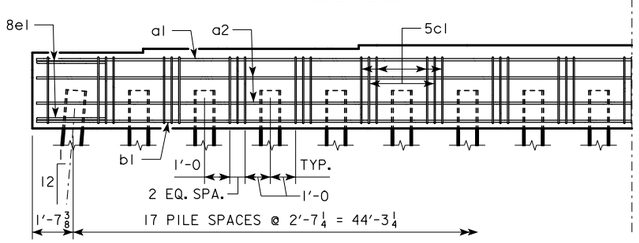

18 PILE BENT

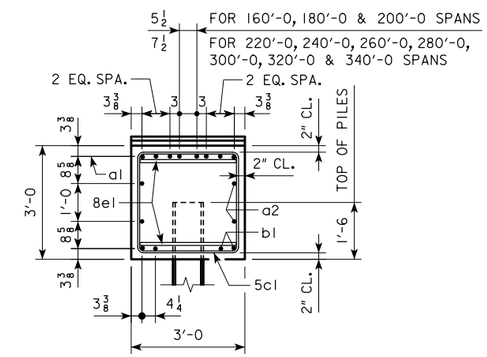

VIEW A-A

FOR 10 & 12 PILE BENTS

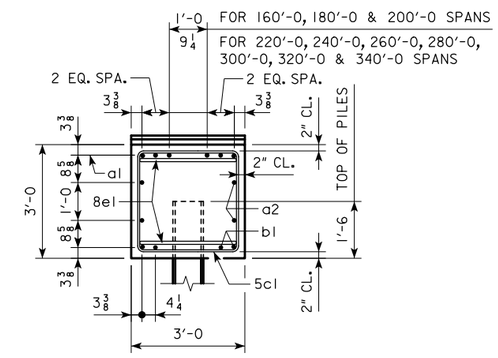

VIEW A-A

FOR 14, 16 & 18 PILE BENTS

LATEST REVISION DATE

APPROVED BY BRIDGE ENGINEER

IOWA DOT Highway Division

STANDARD DESIGN - 40' ROADWAY, 3 SPAN BRIDGES

ROLLED STEEL BEAM BRIDGES

OCTOBER, 2014

PILE BENT PIERS

30° SKEW

RS40-108-14

PILE BENT NOTES:

THESE PIER BENTS ARE DESIGNED FOR USE IN LOCATIONS WHERE ICE AND DRIFT CONDITIONS ARE NOT SEVERE.

FOR DETAILS OF TRESTLE PILES, TYPES 1, 2 AND 3, SEE STANDARD PIOL.

MINIMUM CLEAR DISTANCE FROM FACE OF CONCRETE TO NEAR REINFORCING BAR SHALL BE 2 INCHES UNLESS OTHERWISE NOTED OR SHOWN.

PIER PILES SHALL BE DRIVEN TO VALUES SHOWN IN DESIGN PLANS.

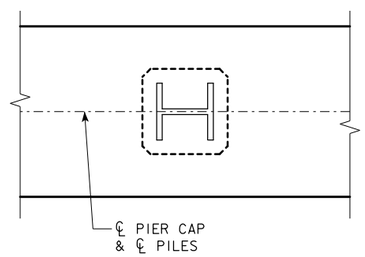

PILE ORIENTATION DETAIL FOR TYPE 3 TRESTLE BENT PILES

REINFORCING BAR LIST AND ESTIMATED QUANTITIES - PER PILE BENT

			10 PILE BENT			12 PILE BENT			14 PILE BENT			16 PILE BENT			18 PILE BENT		
BAR	LENGTH	SHAPE	NO.	SIZE	WEIGHT	NO.	SIZE	WEIGHT	NO.	SIZE	WEIGHT	NO.	SIZE	WEIGHT	NO.	SIZE	WEIGHT
a1	47'-2	———	8	9	1283	8	9	1283	6	9	962	6	9	962	6	9	962
a2	47'-2	———	4	8	504	4	8	504	4	8	504	4	8	504	4	8	504
b1	47'-2	———	4	9	641	4	9	641	4	9	641	4	9	641	4	9	641
5c1	11'-8	[ ]	47	5	572	57	5	694	67	5	815	62	5	754	53	5	645
8e1	8'-1	[ ]	4	8	86	4	8	86	4	8	86	4	8	86	4	8	86
(1) REINFORCING STEEL (LB.)			3086			3208			3008			2947			2838		
STRUCTURAL CONCRETE (CY)		(2) PILE TYPE															
		1, 2	-----			16.5			16.4			16.3			16.2		
		3	17.0			17.0			17.0			17.0			17.0		

NOTE: THE REINFORCING STEEL QUANTITY IS TO BE INCLUDED ON THE SUMMARY QUANTITIES SHEET IN THE PLAN.

NOTE: THE CONCRETE QUANTITY IS TO BE INCLUDED ON THE SUMMARY QUANTITIES SHEET IN THE PLAN.

NOTE: THE PILE TYPE IS TO BE INCLUDED ON THE SUMMARY QUANTITIES SHEET IN THE PLAN.

BENT BAR DETAILS

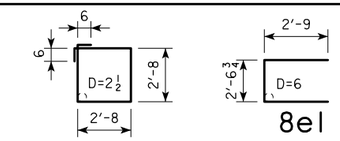

NOTE: ALL DIMENSIONS ARE OUT TO OUT. D=PIN DIAMETER.

℄-℄ ABUTMENT BEARING	FRICTION BEARING PILING			FRICTION OR POINT BEARING PILING		
	PIOL TYPE 1 OR 2			PIOL TYPE 3		
	NUMBER OF TRESTLE PILES	(3) "K" (INCHES)	(3) LRFD Pu, STRENGTH I, DES. LOAD (KIPS)	NUMBER OF TRESTLE PILES	PILE SIZE	(3) LRFD Pu, STRENGTH I, DES. LOAD (KIPS)
160'-0	14	14	86	10	HP10x57	121
	12	16	101	10	HP12x53	121
180'-0	14	14	94	10	HP10x57	132
	14	16	94	10	HP12x53	132
200'-0	16	14	89	10	HP10x57	143
	14	16	102	12	HP12x53	119
220'-0	--	--	--	12	HP10x57	130
	--	--	--	12	HP12x53	130
240'-0	--	--	-	12	HP10x57	142
	--	--	--	14	HP12x53	122
260'-0	--	--	--	14	HP10x57	132
				14	HP12x53	132
280'-0	--	--	--	14	HP10x57	142
				16	HP12x53	124
300'-0	--	--	--	16	HP10x57	133
				16	HP12x53	133
320'-0	--	--	--	16	HP10x57	142
				18	HP12x53	126
340'-0	--	--	--	18	HP10x57	133
				18	HP12x53	133

(1) SEE SHEET RS40-168-14 FOR STEP REINFORCING STEEL QUANTITIES AND DETAILS.

(2) CONCRETE QUANTITIES SHOWN HAVE HAD THE VOLUME OF EMBEDDED PILES DEDUCTED FOR TYPES 1 AND 2 BASED ON 0.8 FT^3 PER FOOT OF EMBEDMENT. THE CONCRETE QUANTITIES FOR TYPE 3 PILES DO NOT REQUIRE REDUCTION FOR PILE EMBEDMENT.

(3) SEE STANDARD PIOL FOR "K" DIMENSION.

(4) NOTE: PU, STRENGTH I DESIGN LOAD (KIPS) IS NOT THE VALUE USED IN THE FIELD FOR DRIVING PILES.

NOTE: FRICTION BEARING INCLUDES SIDE FRICTION AND END BEARING IN SOIL. POINT BEARING INCLUDES SIDE FRICTION AND POINT BEARING IN ROCK.

LATEST REVISION DATE

APPROVED BY BRIDGE ENGINEER

IOWA DOT Highway Division

STANDARD DESIGN - 40' ROADWAY, 3 SPAN BRIDGES

ROLLED STEEL BEAM BRIDGES

OCTOBER, 2014

PILE BENT PIERS

30° SKEW

RS40-109-14

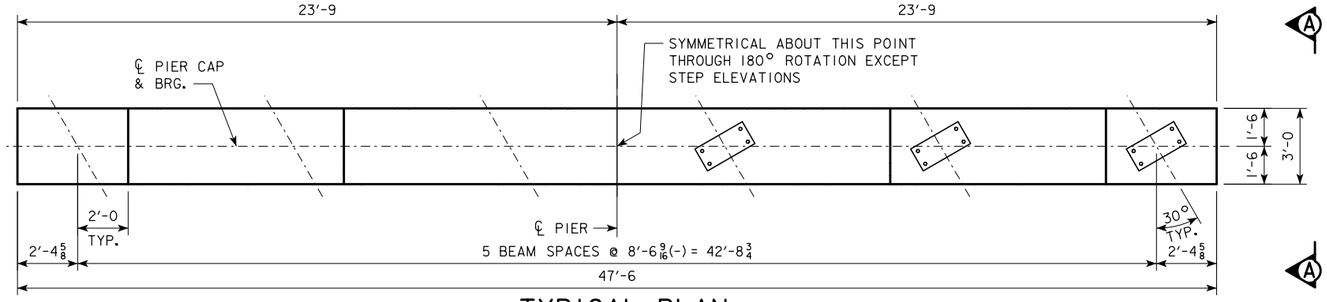

TYPICAL PLAN

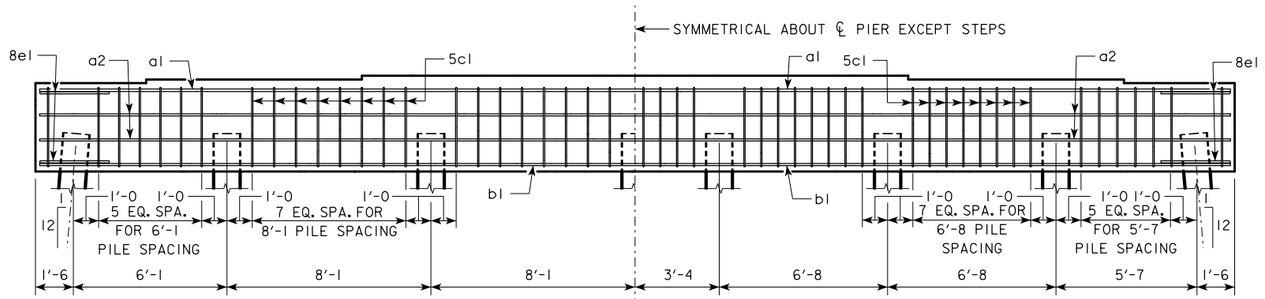

7 PILE BENT

8 PILE BENT

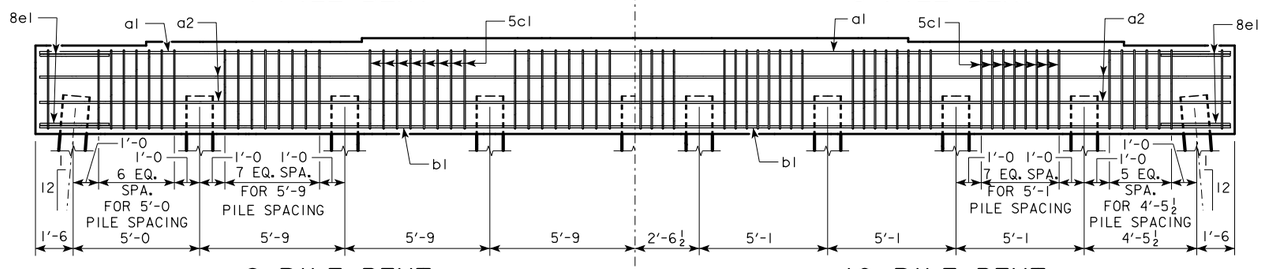

9 PILE BENT

10 PILE BENT

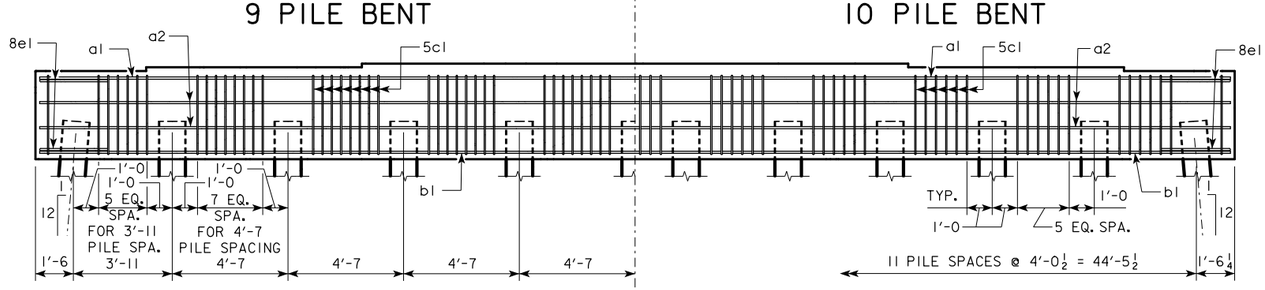

11 PILE BENT

12 PILE BENT

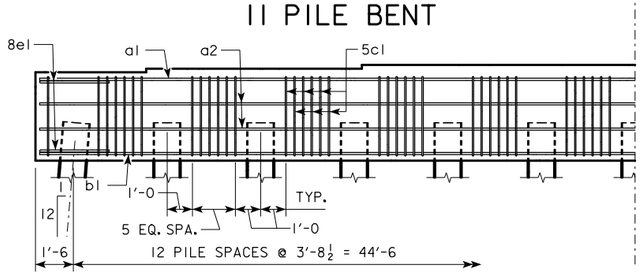

13 PILE BENT

NOTE:
THE HEIGHT OF THE STEPS ON THE BRIDGE SEAT IS EQUAL TO THE DIFFERENCE IN ELEVATIONS OF THE TOP OF SLAB AT ADJACENT BEAMS ALONG ℄ PIER.
ANCHOR BOLTS REQUIRED FOR FIXED PIER BEARINGS ONLY. FOR BOLT AND BEARING SIZES, SEE RS40-093-14, RS40-094-14 OR RS40-095-14.

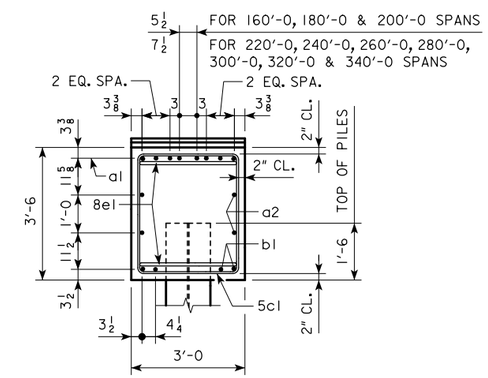

VIEW A-A

FOR 7, 8, 9, 10, 11, 12 & 13 PILE BENTS

LATEST REVISION DATE

APPROVED BY BRIDGE ENGINEER

IOWA DOT Highway Division

STANDARD DESIGN - 40' ROADWAY, 3 SPAN BRIDGES

ROLLED STEEL BEAM BRIDGES

OCTOBER, 2014

PILE BENT PIERS HP14 PILES

30° SKEW

RS40-110-14

PILE BENT NOTES:

THESE PIER BENTS ARE DESIGNED FOR USE IN LOCATIONS WHERE ICE AND DRIFT CONDITIONS ARE NOT SEVERE.

FOR DETAILS OF TRESTLE PILES, SEE STANDARD PIOL.

MINIMUM CLEAR DISTANCE FROM FACE OF CONCRETE TO NEAR REINFORCING BAR SHALL BE 2 INCHES UNLESS OTHERWISE NOTED OR SHOWN.
PIER PILES SHALL BE DRIVEN TO VALUES SHOWN IN DESIGN PLANS.

REINFORCING BAR LIST AND ESTIMATED QUANTITIES - PER PILE BENT

			7 PILE BENT			8 PILE BENT			9 PILE BENT			10 PILE BENT			11 PILE BENT			12 PILE BENT			13 PILE BENT		
BAR	LENGTH	SHAPE	NO.	SIZE	WEIGHT	NO.	SIZE	WEIGHT	NO.	SIZE	WEIGHT	NO.	SIZE	WEIGHT	NO.	SIZE	WEIGHT	NO.	SIZE	WEIGHT	NO.	SIZE	WEIGHT
a1	47'-2	———	8	9	1283	8	9	1283	8	9	1283	8	9	1283	8	9	1283	8	9	1283	8	9	1283
a2	47'-2	———	4	8	504	4	8	504	4	8	504	4	8	504	4	8	504	4	8	504	4	8	504
b1	47'-2	———	4	10	812	4	10	812	4	10	812	4	10	812	4	10	812	4	9	641	4	10	812
5c1	12'-8	[ ]	46	5	608	54	5	713	64	5	846	70	5	925	78	5	1030	68	5	898	74	5	978
8e1	8'-1	[ ]	4	8	86	4	8	86	4	8	86	4	8	86	4	8	86	4	8	86	4	8	86
(1) REINFORCING STEEL (LB.)			3293			3398			3531			3610			3715			3412			3663		
STRUCTURAL		PILE TYPE																					
CONCRETE (CY)		3	19.6			19.6			19.6			19.6			19.6			19.6			19.6		

NOTE: THE REINFORCING STEEL QUANTITY IS TO BE INCLUDED ON THE SUMMARY QUANTITIES SHEET IN THE PLAN.

NOTE: THE CONCRETE QUANTITY IS TO BE INCLUDED ON THE SUMMARY QUANTITIES SHEET IN THE PLAN.

NOTE: THE PILE TYPE IS TO BE INCLUDED ON THE SUMMARY QUANTITIES SHEET IN THE PLAN.

BENT BAR DETAILS

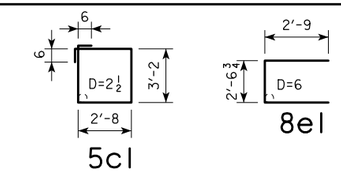

NOTE: ALL DIMENSIONS ARE OUT TO OUT. D=PIN DIAMETER.

FRICTION OR POINT BEARING PILING

℄-℄ ABUTMENT BEARING	PIOL TYPE 3		
	NUMBER OF TRESTLE PILES	PILE SIZE	(1) LRFD Pu, STRENGTH I, DES. LOAD (KIPS)
160'-0	7	HP14x73	175
	7	HP14x89	175
180'-0	8	HP14x73	167
	7	HP14x89	190
200'-0	8	HP14x73	180
	7	HP14x89	206
220'-0	9	HP14x73	175
	7	HP14x89	225
240'-0	10	HP14x73	172
	8	HP14x89	215
260'-0	11	HP14x73	169
	9	HP14x89	207
280'-0	11	HP14x73	181
	9	HP14x89	222
300'-0	12	HP14x73	179
	10	HP14x89	214
320'-0	13	HP14x73	176
	11	HP14x89	208
340'-0	13	HP14x73	185
	11	HP14x89	218

(1) SEE SHEET RS40-168-14 FOR STEP REINFORCING STEEL QUANTITIES AND DETAILS.

(2) NOTE: PU, STRENGTH I DESIGN LOAD (KIPS) IS NOT THE VALUE USED IN THE FIELD FOR DRIVING PILES.

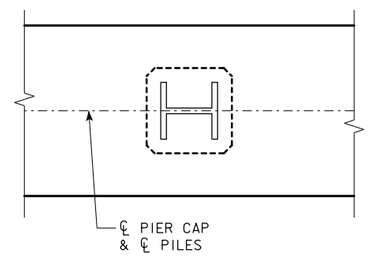

PILE ORIENTATION DETAIL FOR TYPE 3 TRESTLE BENT PILES

NOTE: FRICTION BEARING INCLUDES SIDE FRICTION AND END BEARING IN SOIL. POINT BEARING INCLUDES SIDE FRICTION AND POINT BEARING IN ROCK.

LATEST REVISION DATE

APPROVED BY BRIDGE ENGINEER

IOWA DOT Highway Division

STANDARD DESIGN - 40' ROADWAY, 3 SPAN BRIDGES

ROLLED STEEL BEAM BRIDGES

OCTOBER, 2014

PILE BENT PIERS
HP14 PILES
30° SKEW

RS40-111-14

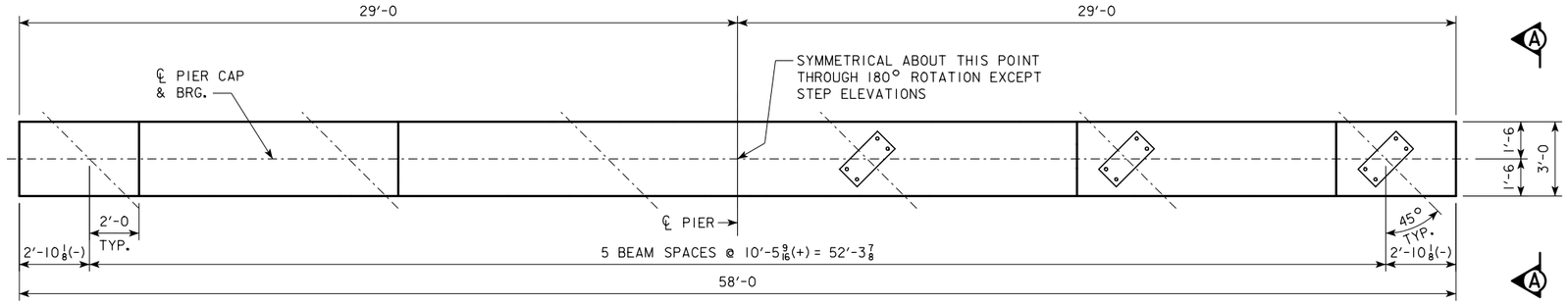

TYPICAL PLAN

NOTE:
THE HEIGHT OF THE STEPS ON THE BRIDGE SEAT IS EQUAL TO THE DIFFERENCE IN ELEVATIONS OF THE TOP OF SLAB AT ADJACENT BEAMS ALONG ℄ PIER.
ANCHOR BOLTS REQUIRED FOR FIXED PIER BEARINGS ONLY.
FOR BOLT AND BEARING SIZES, SEE RS40-093-14, RS40-094-14 OR RS40-095-14.

SYMMETRICAL ABOUT ℄ PIER EXCEPT STEPS

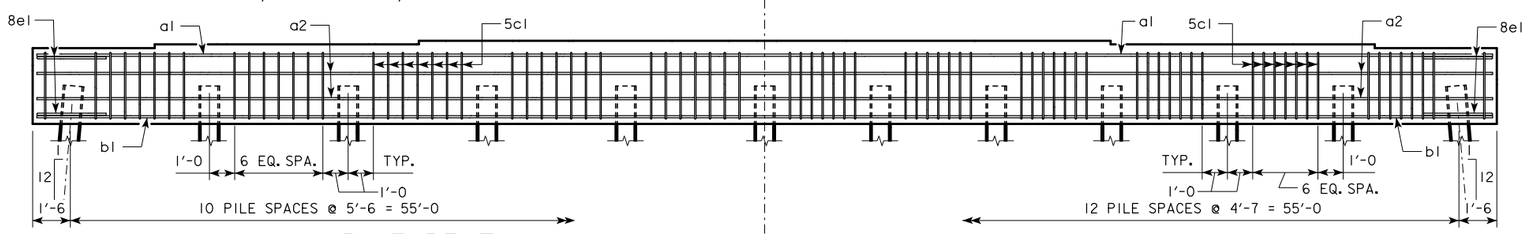

11 PILE BENT

13 PILE BENT

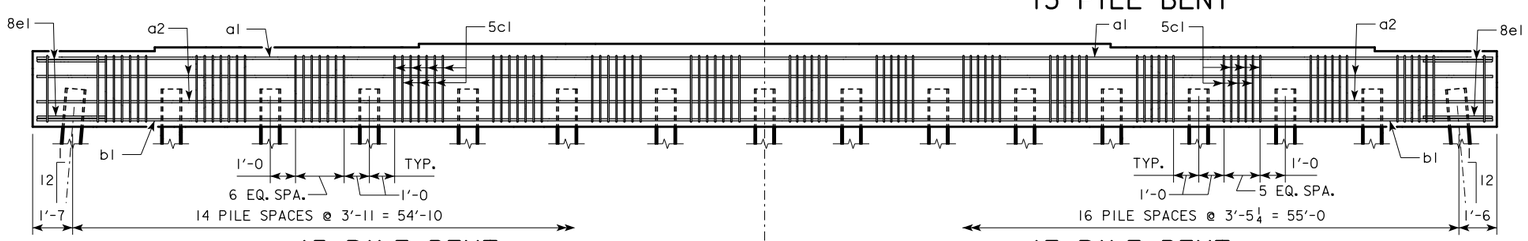

15 PILE BENT

17 PILE BENT

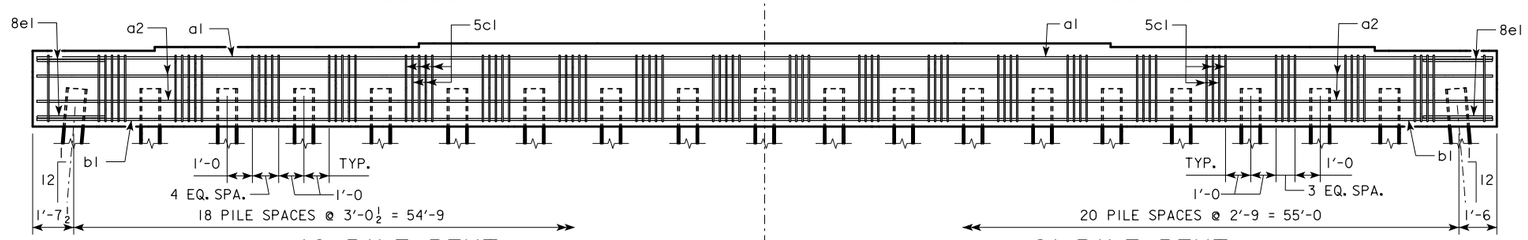

19 PILE BENT

21 PILE BENT

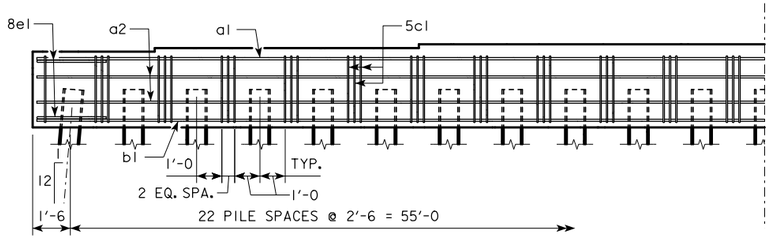

23 PILE BENT

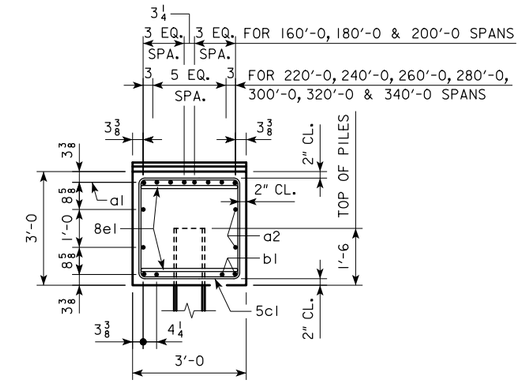

VIEW A-A

FOR 11, 13 & 15 PILE BENTS

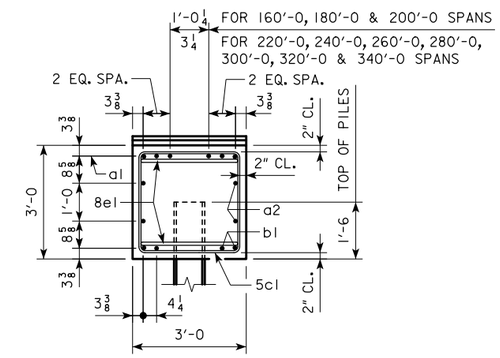

VIEW A-A

FOR 17 & 19 PILE BENTS

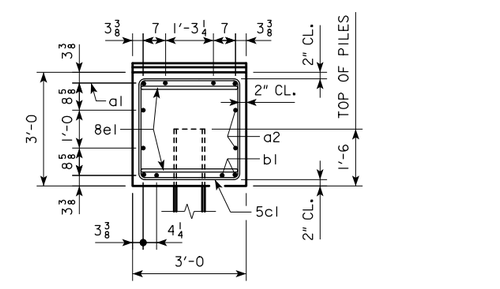

VIEW A-A

FOR 21 & 23 PILE BENTS

LATEST REVISION DATE

APPROVED BY BRIDGE ENGINEER

IOWA DOT Highway Division

STANDARD DESIGN - 40' ROADWAY, 3 SPAN BRIDGES

ROLLED STEEL BEAM BRIDGES

OCTOBER, 2014

PILE BENT PIERS

45° SKEW

RS40-112-14

PILE BENT NOTES:

THESE PIER BENTS ARE DESIGNED FOR USE IN LOCATIONS WHERE ICE AND DRIFT CONDITIONS ARE NOT SEVERE.

FOR DETAILS OF TRESTLE PILES, TYPES 1, 2 AND 3, SEE STANDARD PIOL.

MINIMUM CLEAR DISTANCE FROM FACE OF CONCRETE TO NEAR REINFORCING BAR SHALL BE 2 INCHES UNLESS OTHERWISE NOTED OR SHOWN.

PIER PILES SHALL BE DRIVEN TO VALUES SHOWN IN DESIGN PLANS.

REINFORCING BAR LIST AND ESTIMATED QUANTITIES - PER PILE BENT

			11 PILE BENT			13 PILE BENT			15 PILE BENT			17 PILE BENT			19 PILE BENT			21 PILE BENT			23 PILE BENT		
BAR	LENGTH	SHAPE	NO.	SIZE	WEIGHT	NO.	SIZE	WEIGHT	NO.	SIZE	WEIGHT	NO.	SIZE	WEIGHT	NO.	SIZE	WEIGHT	NO.	SIZE	WEIGHT	NO.	SIZE	WEIGHT
a1	57'-8	———	8	9	1569	8	9	1569	8	9	1569	6	9	1176	6	9	1176	4	9	784	4	9	784
a2	57'-8	———	4	8	616	4	8	616	4	8	616	4	8	616	4	8	616	4	8	616	4	8	616
b1	57'-8	———	4	9	784	4	9	784	4	9	784	4	9	784	4	9	784	4	9	784	4	9	784
5c1	11'-8	▭	72	5	876	86	5	1046	100	5	1217	98	5	1192	92	5	1119	82	5	998	68	5	827
8e1	8'-1	▭	4	8	86	4	8	86	4	8	86	4	8	86	4	8	86	4	8	86	4	8	86
(1) REINFORCING STEEL (LB.)			3931			4101			4272			3854			3781			3268			3097		
STRUCTURAL CONCRETE (CY) (2)		PILE TYPE 1, 2	-----			20.4			20.3			20.2			20.1			20.0			19.9		
		PILE TYPE 3	20.9			20.9			20.9			20.9			20.9			-----			-----		

NOTE: THE REINFORCING STEEL QUANTITY IS TO BE INCLUDED ON THE SUMMARY QUANTITIES SHEET IN THE PLAN.

NOTE: THE CONCRETE QUANTITY IS TO BE INCLUDED ON THE SUMMARY QUANTITIES SHEET IN THE PLAN.

NOTE: THE PILE TYPE IS TO BE INCLUDED ON THE SUMMARY QUANTITIES SHEET IN THE PLAN.

BENT BAR DETAILS

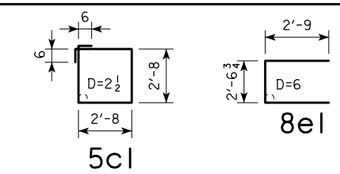

NOTE: ALL DIMENSIONS ARE OUT TO OUT. D=PIN DIAMETER.

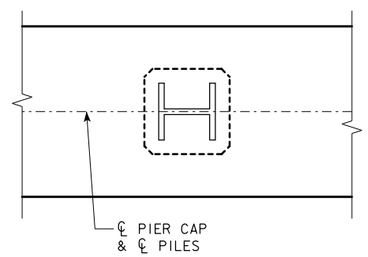

PILE ORIENTATION DETAIL FOR TYPE 3 TRESTLE BENT PILES

℄-℄ ABUTMENT BEARING	FRICTION BEARING PILING — PIOL TYPE 1 OR 2			FRICTION OR POINT BEARING PILING — PIOL TYPE 3		
	NUMBER OF TRESTLE PILES	(3) "K" (INCHES)	(3) LRFD Pu, STRENGTH I, DES. LOAD (KIPS)	NUMBER OF TRESTLE PILES	PILE SIZE	(4) LRFD Pu, STRENGTH I, DES. LOAD (KIPS)
160'-0	13	14	94	11	HP10x57	112
	13	16	94	11	HP12x53	112
180'-0	15	14	89	11	HP10x57	122
	13	16	103	11	HP12x53	122
200'-0	17	14	85	11	HP10x57	131
	15	16	96	11	HP12x53	131
220'-0	17	14	93	11	HP10x57	143
	15	16	105	13	HP12x53	121
240'-0	19	14	91	13	HP10x57	133
	17	16	101	13	HP12x53	133
260'-0	--	--	--	13	HP10x57	143
	-	--	-	15	HP12x53	124
280'-0	--	--	--	15	HP10x57	133
	--	--	--	15	HP12x53	133
300'-0	--	--	--	15	HP10x57	143
	--	--	--	17	HP12x53	126
320'-0	--	--	--	17	HP10x57	135
				19	HP12x53	120
340'-0	--	--	--	17	HP10x57	142
				19	HP12x53	127

(1) SEE SHEET RS40-169-14 FOR STEP REINFORCING STEEL QUANTITIES AND DETAILS.

(2) CONCRETE QUANTITIES SHOWN HAVE HAD THE VOLUME OF EMBEDDED PILES DEDUCTED FOR TYPES 1 AND 2 BASED ON 0.8 FT^3 PER FOOT OF EMBEDMENT. THE CONCRETE QUANTITIES FOR TYPE 3 PILES DO NOT REQUIRE REDUCTION FOR PILE EMBEDMENT.

(3) SEE STANDARD PIOL FOR "K" DIMENSION.

(4) NOTE: PU, STRENGTH I DESIGN LOAD (KIPS) IS NOT THE VALUE USED IN THE FIELD FOR DRIVING PILES.

NOTE: FRICTION BEARING INCLUDES SIDE FRICTION AND END BEARING IN SOIL. POINT BEARING INCLUDES SIDE FRICTION AND POINT BEARING IN ROCK.

LATEST REVISION DATE

APPROVED BY BRIDGE ENGINEER

IOWA DOT Highway Division

STANDARD DESIGN - 40' ROADWAY, 3 SPAN BRIDGES

ROLLED STEEL BEAM BRIDGES

OCTOBER, 2014

PILE BENT PIERS

45° SKEW

RS40-113-14

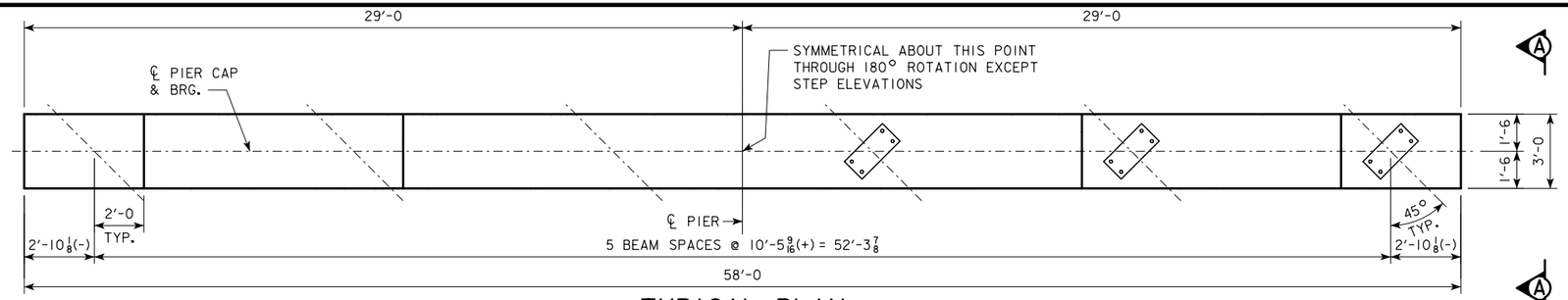

TYPICAL PLAN

NOTE:
THE HEIGHT OF THE STEPS ON THE BRIDGE SEAT IS EQUAL TO THE DIFFERENCE IN ELEVATIONS OF THE TOP OF SLAB AT ADJACENT BEAMS ALONG ℄ PIER.
ANCHOR BOLTS REQUIRED FOR FIXED PIER BEARINGS ONLY. FOR BOLT AND BEARING SIZES, SEE RS40-093-14, RS40-094-14 OR RS40-095-14.

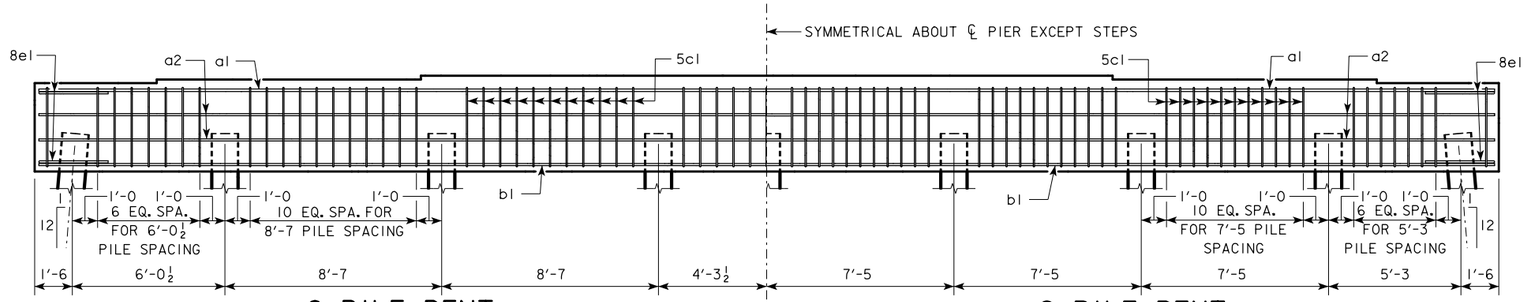

8 PILE BENT

9 PILE BENT

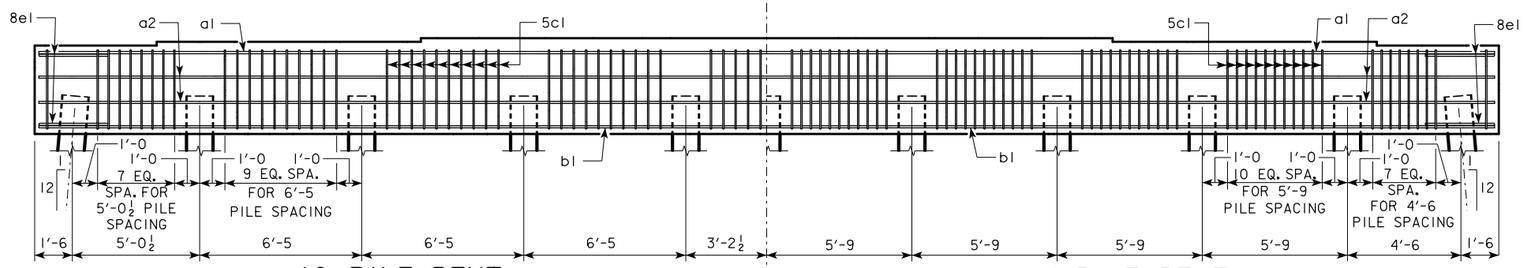

10 PILE BENT

11 PILE BENT

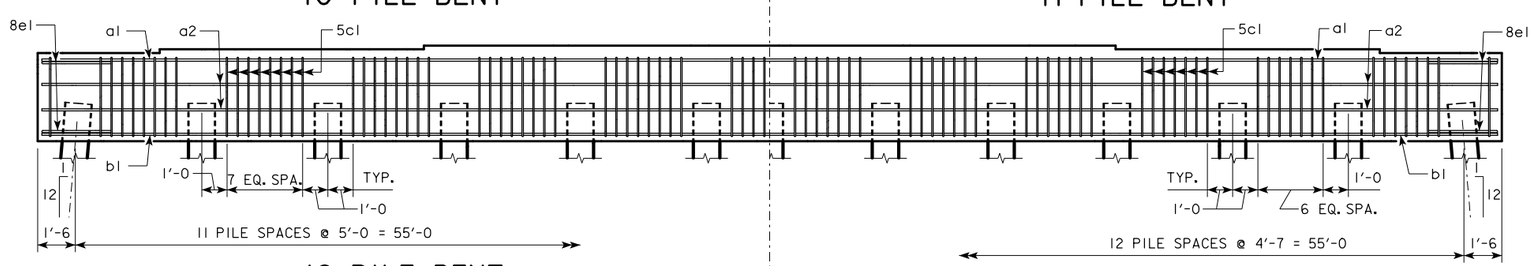

12 PILE BENT

13 PILE BENT

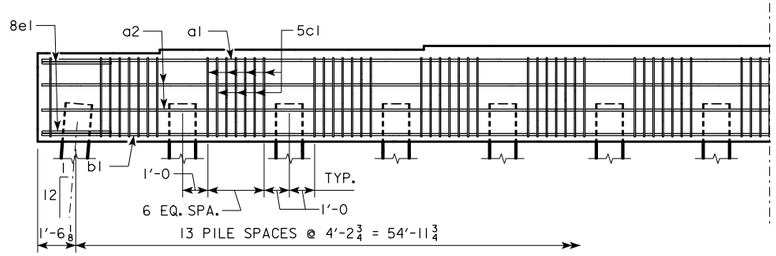

14 PILE BENT

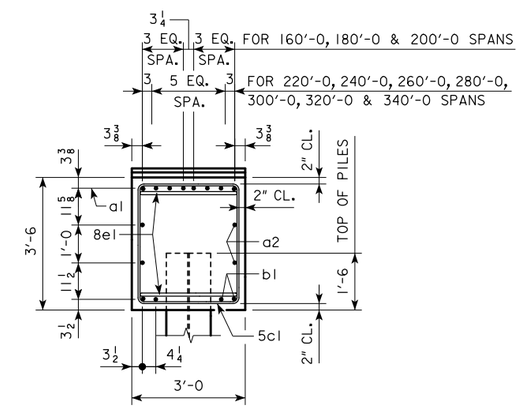

VIEW A-A
FOR 8, 9, 10, 11, 12, 13 & 14 PILE BENTS

LATEST REVISION DATE

APPROVED BY BRIDGE ENGINEER

IOWA DOT Highway Division

STANDARD DESIGN - 40' ROADWAY, 3 SPAN BRIDGES

ROLLED STEEL BEAM BRIDGES

OCTOBER, 2014

PILE BENT PIERS HP14 PILES

45° SKEW

RS40-114-14

PILE BENT NOTES:

THESE PIER BENTS ARE DESIGNED FOR USE IN LOCATIONS WHERE ICE AND DRIFT CONDITIONS ARE NOT SEVERE.

FOR DETAILS OF TRESTLE PILES, SEE STANDARD PIOL.

MINIMUM CLEAR DISTANCE FROM FACE OF CONCRETE TO NEAR REINFORCING BAR SHALL BE 2 INCHES UNLESS OTHERWISE NOTED OR SHOWN.

PIER PILES SHALL BE DRIVEN TO VALUES SHOWN IN DESIGN PLANS.

REINFORCING BAR LIST AND ESTIMATED QUANTITIES - PER PILE BENT

			8 PILE BENT			9 PILE BENT			10 PILE BENT			11 PILE BENT			12 PILE BENT			13 PILE BENT			14 PILE BENT		
BAR	LENGTH	SHAPE	NO.	SIZE	WEIGHT	NO.	SIZE	WEIGHT	NO.	SIZE	WEIGHT	NO.	SIZE	WEIGHT	NO.	SIZE	WEIGHT	NO.	SIZE	WEIGHT	NO.	SIZE	WEIGHT
a1	57'-8	———	8	9	1569	8	9	1569	8	9	1569	8	9	1569	8	9	1569	8	9	1569	8	9	1569
a2	57'-8	———	4	8	616	4	8	616	4	8	616	4	8	616	4	8	616	4	8	616	4	8	616
b1	57'-8	———	4	10	993	4	10	993	4	10	993	4	10	993	4	10	993	4	10	993	4	10	993
5c1	12'-8		71	5	938	82	5	1083	88	5	1163	106	5	1400	90	5	1189	86	5	1136	93	5	1229
8e1	8'-1		4	8	86	4	8	86	4	8	86	4	8	86	4	8	86	4	8	86	4	8	86
(1) REINFORCING STEEL (LB.)			4202			4347			4427			4664			4453			4400			4493		
STRUCTURAL CONCRETE (CY)		PILE TYPE 3	24.2			24.2			24.2			24.2			24.2			24.2			24.2		

NOTE: THE REINFORCING STEEL QUANTITY IS TO BE INCLUDED ON THE SUMMARY QUANTITIES SHEET IN THE PLAN.

NOTE: THE CONCRETE QUANTITY IS TO BE INCLUDED ON THE SUMMARY QUANTITIES SHEET IN THE PLAN.

NOTE: THE PILE TYPE IS TO BE INCLUDED ON THE SUMMARY QUANTITIES SHEET IN THE PLAN.

BENT BAR DETAILS

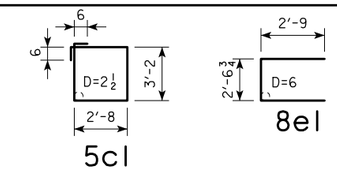

NOTE: ALL DIMENSIONS ARE OUT TO OUT. D=PIN DIAMETER.

FRICTION OR POINT BEARING PILING

℄-℄ ABUTMENT BEARING	PIOL TYPE 3		
	NUMBER OF TRESTLE PILES	PILE SIZE	(2) LRFD Pu, STRENGTH I, DES. LOAD (KIPS)
160'-0	8	HP14x73	155
	8	HP14x89	155
180'-0	8	HP14x73	169
	8	HP14x89	169
200'-0	8	HP14x73	183
	8	HP14x89	183
220'-0	9	HP14x73	177
	8	HP14x89	199
240'-0	10	HP14x73	174
	8	HP14x89	218
260'-0	11	HP14x73	171
	9	HP14x89	209
280'-0	11	HP14x73	183
	9	HP14x89	224
300'-0	12	HP14x73	180
	10	HP14x89	216
320'-0	13	HP14x73	177
	11	HP14x89	209
340'-0	14	HP14x73	173
	11	HP14x89	220

(1) SEE SHEET RS40-169-14 FOR STEP REINFORCING STEEL QUANTITIES AND DETAILS.

(2) NOTE: PU, STRENGTH I DESIGN LOAD (KIPS) IS NOT THE VALUE USED IN THE FIELD FOR DRIVING PILES.

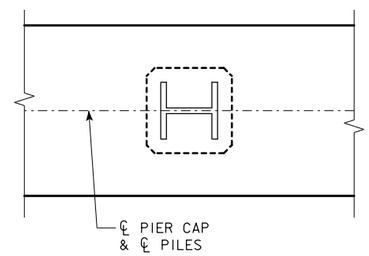

PILE ORIENTATION DETAIL FOR TYPE 3 TRESTLE BENT PILES

NOTE: FRICTION BEARING INCLUDES SIDE FRICTION AND END BEARING IN SOIL. POINT BEARING INCLUDES SIDE FRICTION AND POINT BEARING IN ROCK.

LATEST REVISION DATE

APPROVED BY BRIDGE ENGINEER

IOWA DOT Highway Division

STANDARD DESIGN - 40' ROADWAY, 3 SPAN BRIDGES

ROLLED STEEL BEAM BRIDGES

OCTOBER, 2014

PILE BENT PIERS
HP14 PILES
45° SKEW

RS40-115-14

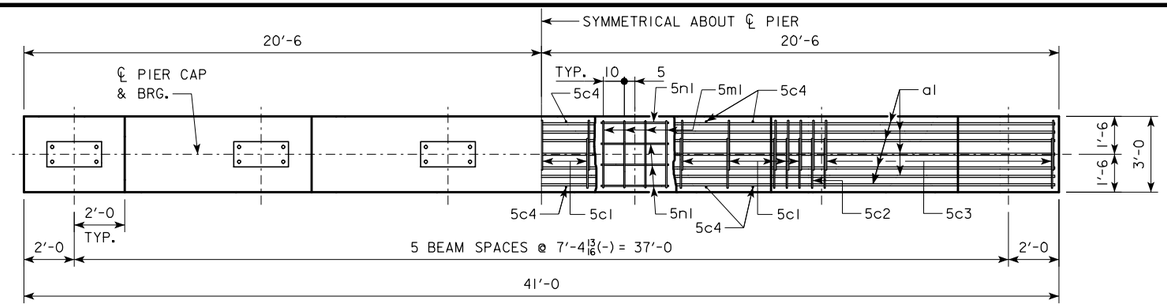

CAP PLAN

NOTE:
ANCHOR BOLTS REQUIRED FOR FIXED PIER BEARINGS ONLY. FOR BOLT AND BEARING SIZES, SEE RS40-093-14, RS40-094-14 OR RS40-095-14.

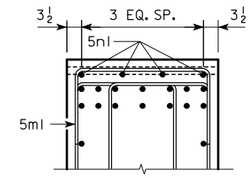

5m1 & 5n1
BAR LAYOUT

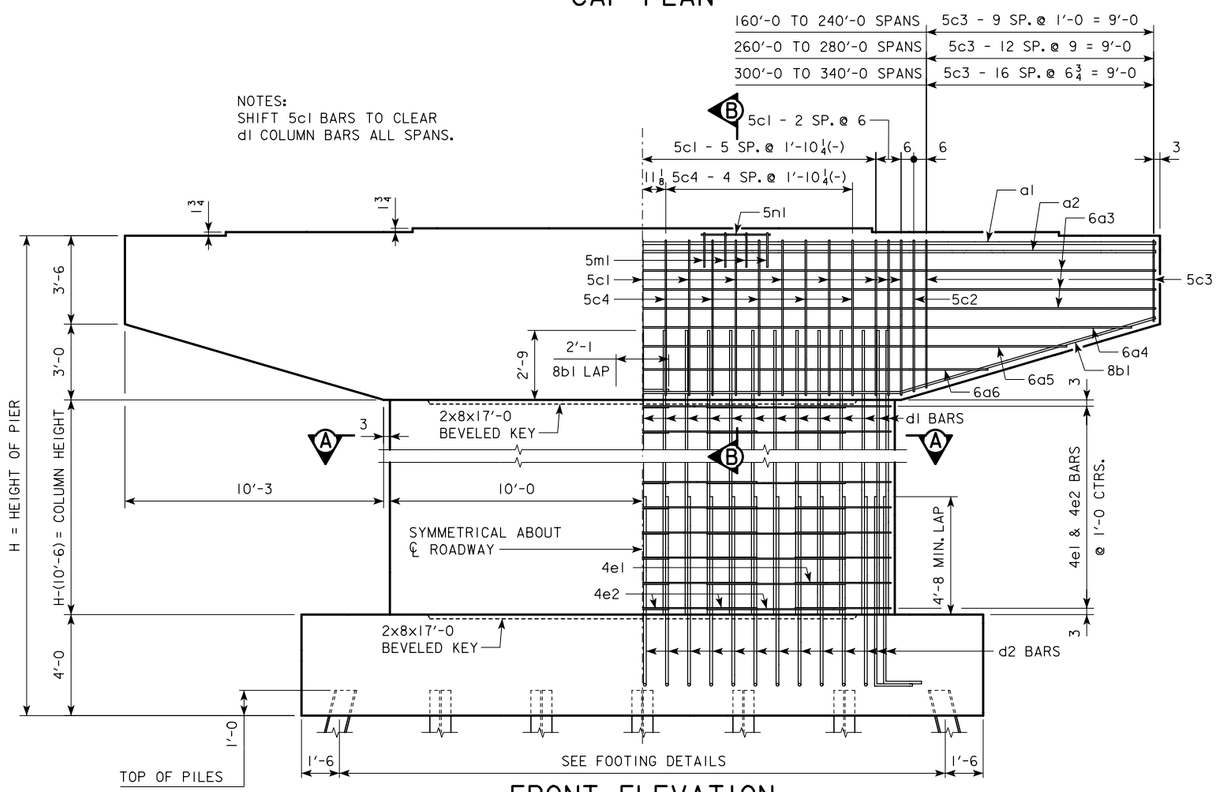

FRONT ELEVATION

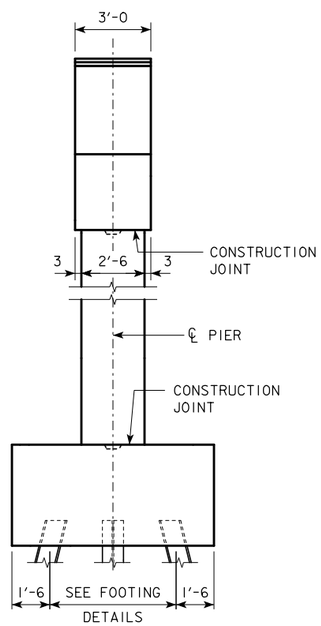

END ELEVATION

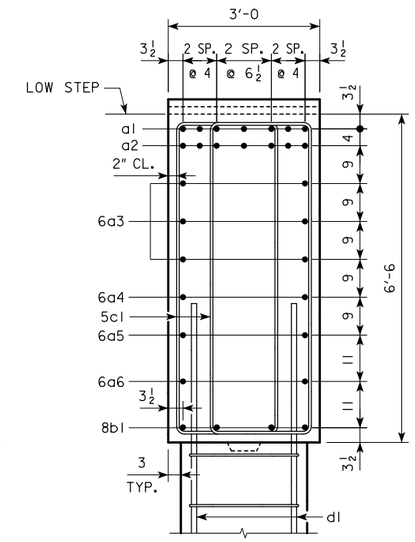

SECTION B-B

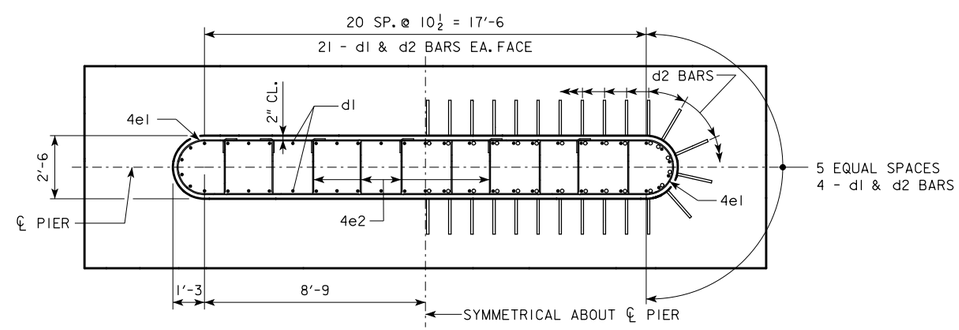

SECTION A-A

LATEST REVISION DATE

APPROVED BY BRIDGE ENGINEER

IOWA DOT Highway Division

STANDARD DESIGN - 40' ROADWAY, 3 SPAN BRIDGES

ROLLED STEEL BEAM BRIDGES

OCTOBER, 2014

TEE PIER CAP & COLUMN DETAILS
0° SKEW

RS40-116-14

CAP

REINFORCING STEEL																																				
℄ - ℄ ABUT. BEARINGS			160'-0			180'-0			200'-0			220'-0			240'-0			260'-0			280'-0			300'-0			320'-0			340'-0		
BAR	LENGTH	SHAPE	NO.	SIZE	WEIGHT	NO.	SIZE	WEIGHT	NO.	SIZE	WEIGHT	NO.	SIZE	WEIGHT	NO.	SIZE	WEIGHT	NO.	SIZE	WEIGHT	NO.	SIZE	WEIGHT	NO.	SIZE	WEIGHT	NO.	SIZE	WEIGHT	NO.	SIZE	WEIGHT
a1	40'-8		7	8	760	7	8	760	7	8	760	7	9	968	7	9	968	7	10	1225	7	10	1225	7	10	1225	7	11	1512	7	11	1512
a2	40'-8		7	7	582	7	8	760	7	8	760	7	8	760	7	9	968	7	9	968	7	10	1225	7	10	1225	7	10	1225	7	10	1225
6a3	40'-8		6	6	366	6	6	366	6	6	366	6	6	366	6	6	366	6	6	366	6	6	366	6	6	366	6	6	366	6	6	366
6a4	38'-8		2	6	116	2	6	116	2	6	116	2	6	116	2	6	116	2	6	116	2	6	116	2	6	116	2	6	116	2	6	116
6a5	33'-7		2	6	101	2	6	101	2	6	101	2	6	101	2	6	101	2	6	101	2	6	101	2	6	101	2	6	101	2	6	101
6a6	27'-4		2	6	82	2	6	82	2	6	82	2	6	82	2	6	82	2	6	82	2	6	82	2	6	82	2	6	82	2	6	82
8b1	21'-10		8	8	466	8	8	466	8	8	466	8	8	466	8	8	466	8	8	466	8	8	466	8	8	466	8	8	466	8	8	466
5c1	17'-4		30	5	542	30	5	542	30	5	542	30	5	542	30	5	542	30	5	542	30	5	542	30	5	542	30	5	542	30	5	542
5c2	17'-0		4	5	71	4	5	71	4	5	71	4	5	71	4	5	71	4	5	71	4	5	71	4	5	71	4	5	71	4	5	71
5c3	VARIES		40	5	589	40	5	589	40	5	589	40	5	589	40	5	589	52	5	766	52	5	766	68	5	1002	68	5	1002	68	5	1002
5c4	6'-8		20	5	139	20	5	139	20	5	139	20	5	139	20	5	139	20	5	139	20	5	139	20	5	139	20	5	139	20	5	139
5m1	5'-8		8	5	47	8	5	47	8	5	47	8	5	47	8	5	47	8	5	47	8	5	47	8	5	47	8	5	47	8	5	47
5n1	2'-10		8	5	24	8	5	24	8	5	24	8	5	24	8	5	24	8	5	24	8	5	24	8	5	24	8	5	24	8	5	24
TOTAL (LB.)			3885			4063			4063			4271			4479			4913			5170			5406			5693			5693		
STRUCTURAL CONCRETE (CY)			27.0			27.0			27.0			27.0			27.0			27.0			27.0			27.0			27.0			27.0		

BENT BAR DETAILS

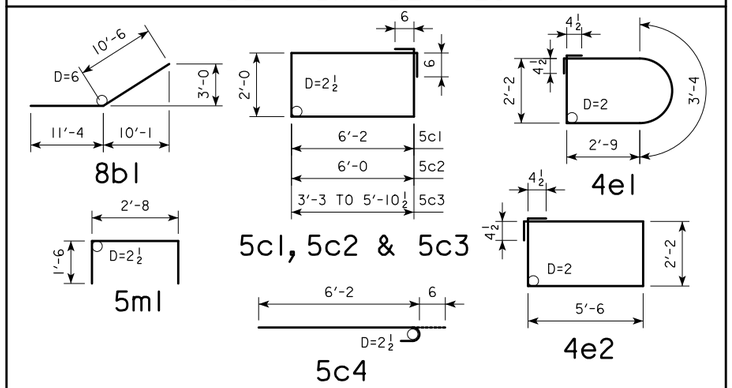

NOTE: ALL DIMENSIONS ARE OUT TO OUT.
D = PIN DIAMETER.

NOTE: THE REINFORCING STEEL QUANTITY IS TO BE INCLUDED ON THE SUMMARY QUANTITIES SHEET IN THE PLAN.

NOTE: THE CONCRETE QUANTITY IS TO BE INCLUDED ON THE SUMMARY QUANTITIES SHEET IN THE PLAN.

COLUMN

H IN FEET	COLUMN HEIGHT	STRUCTURAL CONCRETE (CY)	REINFORCING STEEL												TOTAL WEIGHT (LB.)
			d1 BAR				4e1 BAR				4e2 BAR				
			NO.	SIZE	LENGTH	WEIGHT	NO.	SIZE	LENGTH	WEIGHT	NO.	SIZE	LENGTH	WEIGHT	
16	5'-6	9.9	50	9	8'-3	1403	12	4	11'-9	94	24	4	16'-1	258	1755
17	6'-6	11.7	50	9	9'-3	1573	14	4	11'-9	110	28	4	16'-1	301	1984
18	7'-6	13.5	50	9	10'-3	1743	16	4	11'-9	126	32	4	16'-1	344	2213
19	8'-6	15.3	50	9	11'-3	1913	18	4	11'-9	141	36	4	16'-1	387	2441
20	9'-6	17.1	50	9	12'-3	2083	20	4	11'-9	157	40	4	16'-1	430	2670
21	10'-6	18.9	50	9	13'-3	2253	22	4	11'-9	173	44	4	16'-1	473	2899
22	11'-6	20.7	50	9	14'-3	2423	24	4	11'-9	188	48	4	16'-1	516	3127
23	12'-6	22.5	50	9	15'-3	2593	26	4	11'-9	204	52	4	16'-1	559	3356
24	13'-6	24.3	50	9	16'-3	2763	28	4	11'-9	220	56	4	16'-1	602	3585
25	14'-6	26.1	50	9	17'-3	2933	30	4	11'-9	235	60	4	16'-1	645	3813
26	15'-6	27.9	50	9	18'-3	3103	32	4	11'-9	251	64	4	16'-1	688	4042
27	16'-6	29.7	50	9	19'-3	3273	34	4	11'-9	267	68	4	16'-1	731	4271
28	17'-6	31.5	50	9	20'-3	3443	36	4	11'-9	283	72	4	16'-1	774	4500
29	18'-6	33.3	50	9	21'-3	3613	38	4	11'-9	298	76	4	16'-1	817	4728
30	19'-6	35.1	50	9	22'-3	3783	40	4	11'-9	314	80	4	16'-1	859	4956
31	20'-6	36.9	50	9	23'-3	3953	42	4	11'-9	330	84	4	16'-1	902	5185
32	21'-6	38.7	50	9	24'-3	4123	44	4	11'-9	345	88	4	16'-1	945	5413
33	22'-6	40.5	50	9	25'-3	4293	46	4	11'-9	361	92	4	16'-1	988	5642
34	23'-6	42.4	50	9	26'-3	4463	48	4	11'-9	377	96	4	16'-1	1031	5871
35	24'-6	44.2	50	9	27'-3	4633	50	4	11'-9	392	100	4	16'-1	1074	6099
36	25'-6	46.0	50	9	28'-3	4803	52	4	11'-9	408	104	4	16'-1	1117	6328
37	26'-6	47.8	50	9	29'-3	4973	54	4	11'-9	424	108	4	16'-1	1160	6557
38	27'-6	49.6	50	9	30'-3	5143	56	4	11'-9	440	112	4	16'-1	1203	6786
39	28'-6	51.4	50	9	31'-3	5313	58	4	11'-9	455	116	4	16'-1	1246	7014
40	29'-6	53.2	50	9	32'-3	5483	60	4	11'-9	471	120	4	16'-1	1289	7243

PIER NOTES:

SEE "TEE PIER NOTES" ON RS40-003-14 FOR NOTES REGARDING APPLICATION OF THESE PIER STANDARDS.

MINIMUM CLEAR DISTANCE FROM FACE OF CONCRETE TO NEAR REINFORCING BAR SHALL BE 2 INCHES UNLESS OTHERWISE NOTED OR SHOWN.

LATEST REVISION DATE

APPROVED BY BRIDGE ENGINEER

IOWA DOT Highway Division

STANDARD DESIGN - 40' ROADWAY, 3 SPAN BRIDGES

ROLLED STEEL BEAM BRIDGES

OCTOBER, 2014

TEE PIER CAP & COLUMN DETAILS
0° SKEW

RS40-117-14

H IN FT.	℄ - ℄ ABUT. BRG.	PILING (HP10x57) NO. & LAYOUT	PILING (HP10x57) (1) LRFD Pu, STRENGTH I, DES. LOAD (KIPS)	FOOTING SIZE
16 TO 18	160'-0	15A	146	4' x 9' x 24'
	180'-0	16A	146	
	200'-0	18A	145	
	220'-0	18E	142	4' x 11' x 28'
	240'-0	20A	142	
	260'-0	20B	145	4' x 12' x 30'
	280'-0	22A	144	
	300'-0	23B	144	4' x 12' x 32'
	320'-0	24B	146	
	340'-0	26A	144	
19 TO 21	160'-0	16A	141	4' x 9' x 24'
	180'-0	17A	145	
	200'-0	18D	143	4' x 11' x 26'
	220'-0	18E	145	4' x 11' x 28'
	240'-0	20A	145	
	260'-0	21B	143	4' x 12' x 30'
	280'-0	23A	143	
	300'-0	23B	146	4' x 12' x 32'
	320'-0	25A	144	
	340'-0	26A	147	
22 TO 24	160'-0	16B	143	4' x 10' x 24'
	180'-0	18B	142	
	200'-0	18D	146	4' x 11' x 26'
	220'-0	19A	144	4' x 11' x 28'
	240'-0	20B	141	4' x 12' x 30'
	260'-0	21B	146	
	280'-0	23A	145	
	300'-0	24B	143	4' x 12' x 32'
	320'-0	25A	147	
	340'-0	26B	142	4' x 14' x 32'
25 TO 27	160'-0	16C	144	4' x 10' x 26'
	180'-0	18C	142	
	200'-0	18E	141	4' x 11' x 28'
	220'-0	19A	146	
	240'-0	20B	144	4' x 12' x 30'
	260'-0	22A	142	
	280'-0	24A	143	
	300'-0	24B	145	4' x 12' x 32'
	320'-0	26A	144	
	340'-0	26B	144	4' x 14' x 32'
28 TO 30	160'-0	17B	142	4' x 10' x 26'
	180'-0	18C	145	
	200'-0	18E	144	4' x 11' x 28'
	220'-0	20A	143	
	240'-0	20B	146	4' x 12' x 30'
	260'-0	22A	144	
	280'-0	24A	145	
	300'-0	25A	143	4' x 12' x 32'
	320'-0	26A	146	
	340'-0	26B	145	4' x 14' x 32'
31 TO 33	160'-0	17C	143	4' x 11' x 26'
	180'-0	18D	146	
	200'-0	18E	146	4' x 11' x 28'
	220'-0	20A	145	
	240'-0	21B	143	4' x 12' x 30'
	260'-0	22A	146	
	280'-0	24B	140	4' x 12' x 32'
	300'-0	25A	144	
	320'-0	26B	141	4' x 14' x 32'
	340'-0	27A	143	
34 TO 36	160'-0	17D	141	4' x 11' x 28'
	180'-0	18E	141	
	200'-0	19A	144	
	220'-0	21A	143	
	240'-0	21B	145	4' x 12' x 30'
	260'-0	23A	144	
	280'-0	24B	142	4' x 12' x 32'
	300'-0	25A	146	
	320'-0	26B	142	4' x 14' x 32'
	340'-0	27A	144	

H IN FT.	℄ - ℄ ABUT. BRG.	PILING (HP10x57) NO. & LAYOUT	PILING (HP10x57) (1) LRFD Pu, STRENGTH I, DES. LOAD (KIPS)	FOOTING SIZE
37 TO 40	160'-0	18E	136	4' x 11' x 28'
	180'-0	18E	144	
	200'-0	20A	141	
	220'-0	21A	146	
	240'-0	22A	142	4' x 12' x 30'
	260'-0	23A	146	
	280'-0	24B	144	4' x 12' x 32'
	300'-0	26A	143	
	320'-0	26B	144	4' x 14' x 32'
	340'-0	27A	146	

FOOTING SIZE	REINFORCING STEEL (ONE FOOTING) BAR	NO., SIZE & SPACING	LENGTH	WEIGHT (LB.)	TOTAL WEIGHT (LB.)	STRUCTURAL CONCRETE (CY)
4' x 9' x 24'	d2	50 - #9 AS SHOWN	9'-1	1544	2694	32.0
	f1	24 - #5 @ 1'-0	8'-8	217		
	f2	9 - #5 @ 1'-0	23'-8	222		
	g1	30 - #6 @ 0'-9½	8'-8	391		
	g2	9 - #6 @ 1'-0	23'-8	320		
4' x 10' x 24'	d2	50 - #9 AS SHOWN	9'-1	1544	2941	35.6
	f1	24 - #5 @ 1'-0	9'-8	242		
	f2	10 - #5 @ 1'-0	23'-8	247		
	g1	28 - #7 @ 0'-10	9'-8	553		
	g2	10 - #6 @ 1'-0	23'-8	355		
4' x 10' x 26'	d2	50 - #9 AS SHOWN	9'-1	1544	3309	38.5
	f1	26 - #5 @ 1'-0	9'-8	262		
	f2	10 - #5 @ 1'-0	25'-8	268		
	g1	28 - #7 @ 0'-11	9'-8	553		
	g2	13 - #7 @ 0'-9½	25'-8	682		
4' x 11' x 26'	d2	50 - #9 AS SHOWN	9'-1	1544	3578	42.4
	f1	26 - #5 @ 1'-0	10'-8	289		
	f2	11 - #5 @ 1'-0	25'-8	294		
	g1	27 - #8 @ 0'-11½	10'-8	769		
	g2	13 - #7 @ 0'-10½	25'-8	682		
4' x 11' x 28'	d2	50 - #9 AS SHOWN	9'-1	1544	4164	45.6
	f1	28 - #5 @ 1'-0	10'-8	312		
	f2	11 - #5 @ 1'-0	27'-8	317		
	g1	31 - #8 @ 0'-11	10'-8	883		
	g2	15 - #8 @ 0'-9	27'-8	1108		
4' x 12' x 30'	d2	50 - #9 AS SHOWN	9'-1	1544	5142	53.3
	f1	30 - #5 @ 1'-0	11'-8	365		
	f2	12 - #5 @ 1'-0	29'-8	371		
	g1	34 - #9 @ 0'-10½	11'-8	1349		
	g2	15 - #9 @ 0'-9½	29'-8	1513		
4' x 12' x 32'	d2	50 - #9 AS SHOWN	9'-1	1544	5880	56.9
	f1	32 - #5 @ 1'-0	11'-8	389		
	f2	12 - #5 @ 1'-0	31'-8	396		
	g1	38 - #9 @ 0'-10	11'-8	1507		
	g2	15 - #10 @ 0'-9½	31'-8	2044		
4' x 14' x 32'	d2	50 - #9 AS SHOWN	9'-1	1544	6681	66.4
	f1	32 - #5 @ 1'-0	13'-8	456		
	f2	14 - #5 @ 1'-0	31'-8	462		
	g1	38 - #9 @ 0'-10	13'-8	1766		
	g2	18 - #10 @ 0'-9½	31'-8	2453		

(1) NOTE: PU, STRENGTH I DESIGN LOAD (KIPS) IS NOT THE VALUE USED IN THE FIELD FOR DRIVING PILES.

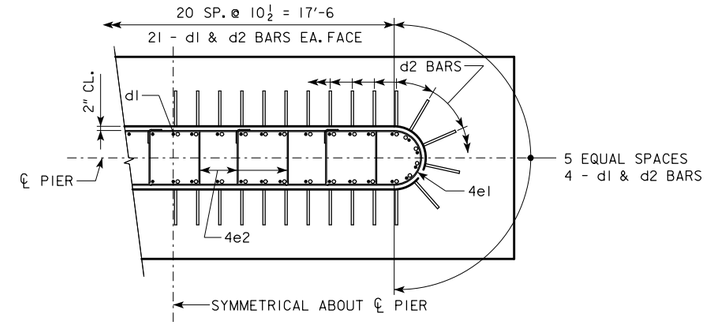

d2 BAR LAYOUT

(SEE SECTION A-A ON SHEET RS40-116-14.)

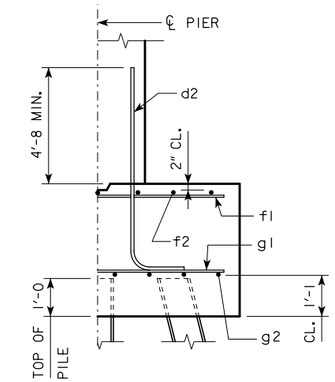

TYPICAL SECTION

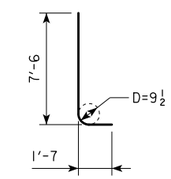

d2

NOTE: D = PIN DIAMETER.
DIMENSIONS ARE OUT TO OUT.

NOTE: THE REINFORCING STEEL QUANTITY IS TO BE INCLUDED ON THE SUMMARY QUANTITIES SHEET IN THE PLAN.

NOTE: THE CONCRETE QUANTITY IS TO BE INCLUDED ON THE SUMMARY QUANTITIES SHEET IN THE PLAN.

NOTE: THE PILE TYPE IS TO BE INCLUDED ON THE SUMMARY QUANTITIES SHEET IN THE PLAN.

FOOTING NOTES:

THESE FOOTINGS ARE DESIGNED AND DETAILED TO BE USED WITH THE CAP AND COLUMN DETAILS OF THE TEE PIERS AS SHOWN ON SHEET RS40-116-14.

BATTER PILES IN EXTERIOR ROWS 1:4 IN THE DIRECTION SHOWN.

STEEL PILING USED AS POINT BEARING SHALL HAVE A MINIMUM DISTANCE OF APPROXIMATELY 10 FEET FROM BOTTOM OF FOOTING TO TOP OF BEARING ROCK. THE PILE LAYOUTS ARE SUCH THAT THE DISTANCE CENTER TO CENTER OF ADJACENT PILING SHALL NOT EXCEED 8'-0.

PIER PILES SHALL BE DRIVEN TO VALUES SHOWN IN DESIGN PLANS.

LATEST REVISION DATE

APPROVED BY BRIDGE ENGINEER

IOWA DOT Highway Division

STANDARD DESIGN - 40' ROADWAY, 3 SPAN BRIDGES

ROLLED STEEL BEAM BRIDGES

OCTOBER, 2014

TEE PIER-HP10x57 SRL-1
STEEL PILE FOOTINGS
0° SKEW - SHEET 1

RS40-118-14

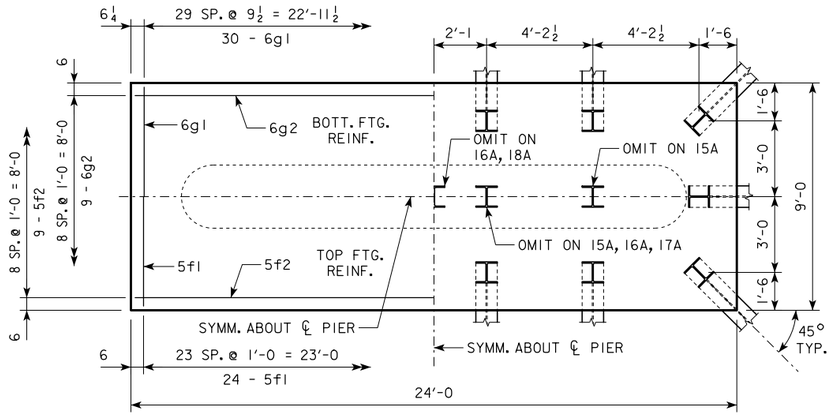

4'-0 x 9'-0 x 24'-0 FOR 15A, 16A, 17A & 18A

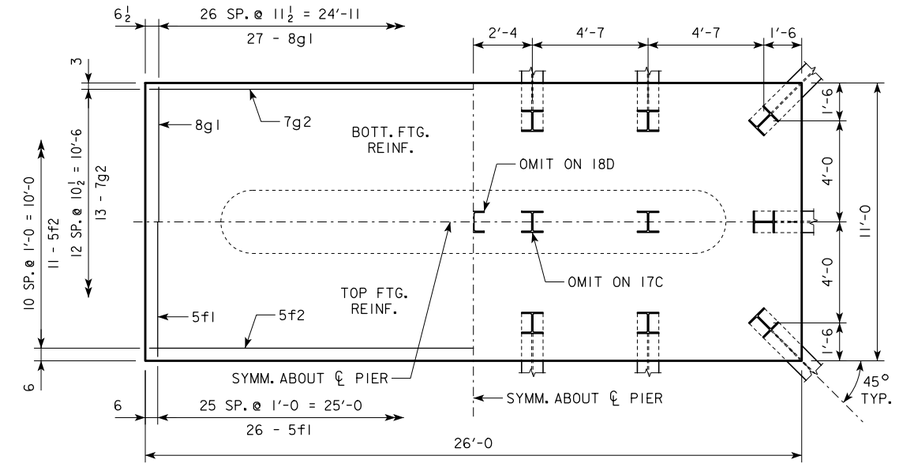

4'-0 x 11'-0 x 26'-0 FOR 17C & 18D

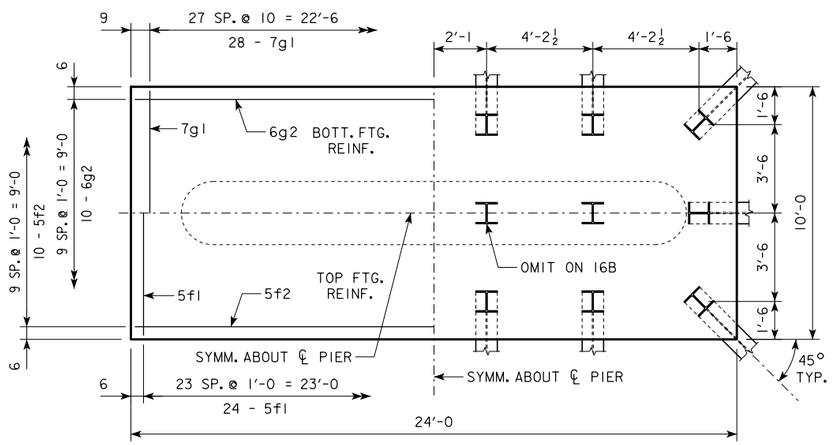

4'-0 x 10'-0 x 24'-0 FOR 16B & 18B

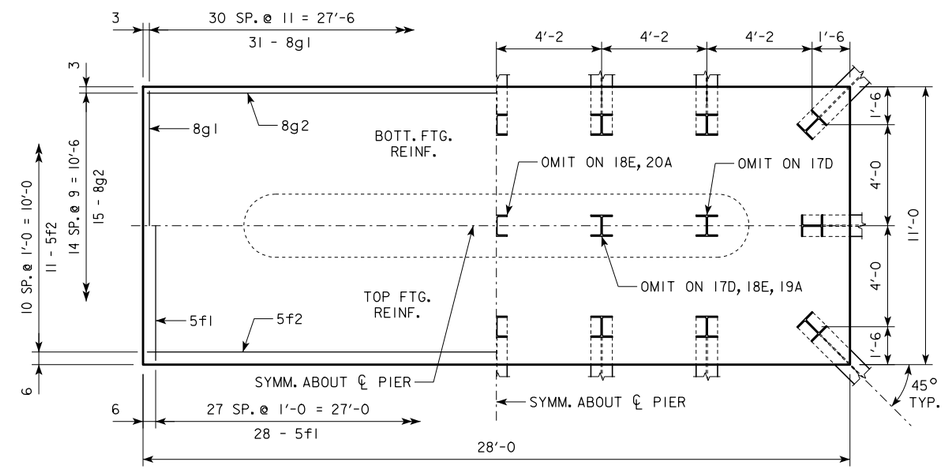

4'-0 x 11'-0 x 28'-0 FOR 17D, 18E, 19A, 20A & 21A

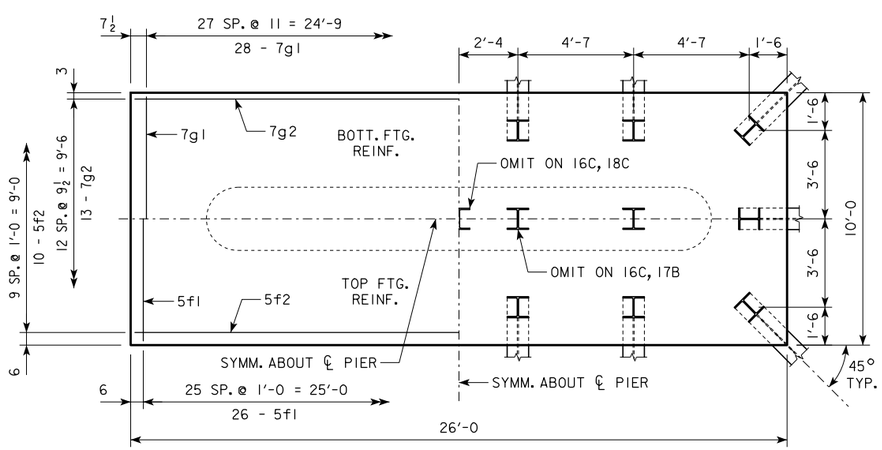

4'-0 x 10'-0 x 26'-0 FOR 16C, 17B & 18C

NOTE:
SEE SHEET RS40-118-14 FOR FOOTING NOTES.

LATEST REVISION DATE

APPROVED BY BRIDGE ENGINEER

IOWA DOT Highway Division

STANDARD DESIGN - 40' ROADWAY, 3 SPAN BRIDGES

ROLLED STEEL BEAM BRIDGES

OCTOBER, 2014

TEE PIER-HP10x57 SRL-I STEEL PILE FOOTINGS

0° SKEW - SHEET 2

RS40-119-14

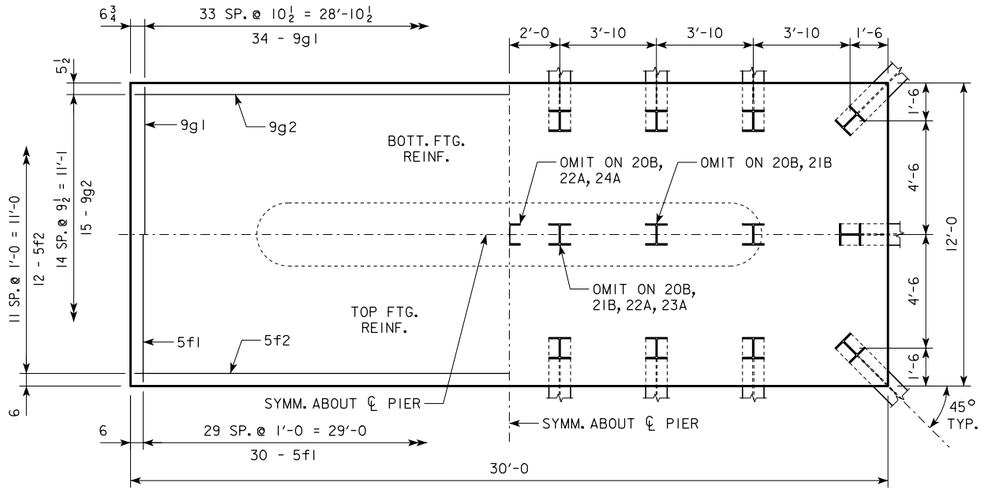

4'-0 x 12'-0 x 30'-0 FOR 20B, 21B, 22A, 23A & 24A

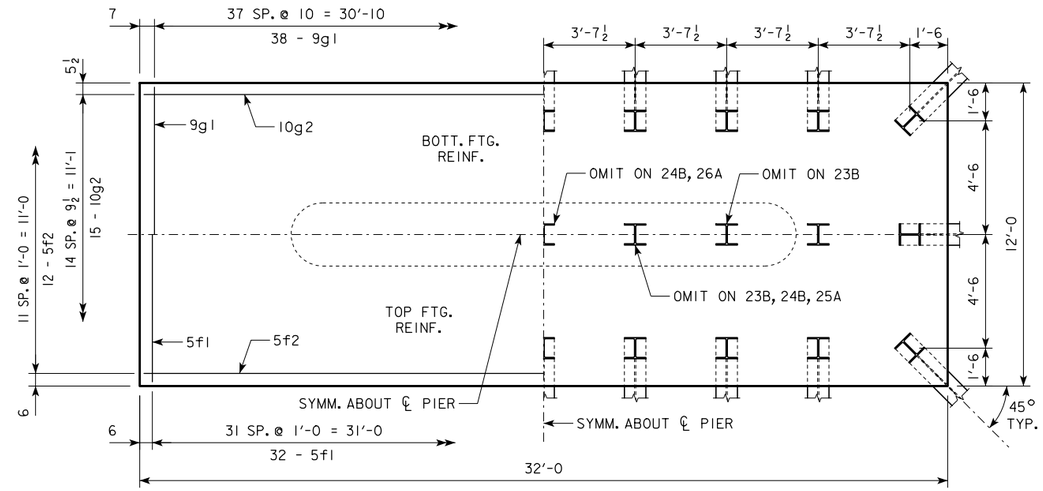

4'-0 x 12'-0 x 32'-0 FOR 23B, 24B, 25A & 26A

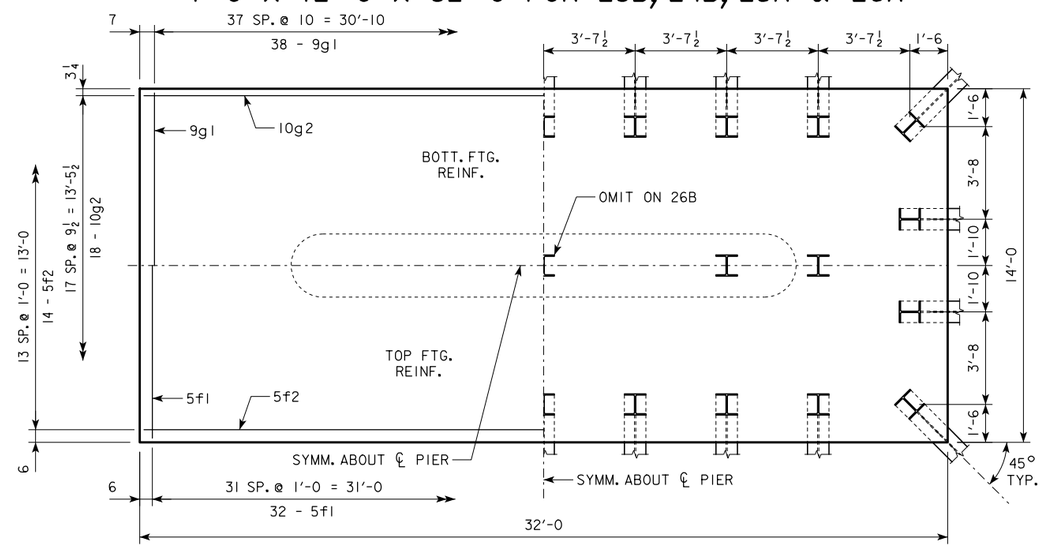

4'-0 x 14'-0 x 32'-0 FOR 26B & 27A

NOTE:
SEE SHEET RS40-118-14 FOR FOOTING NOTES.

LATEST REVISION DATE

APPROVED BY BRIDGE ENGINEER

IOWA DOT Highway Division

STANDARD DESIGN - 40' ROADWAY, 3 SPAN BRIDGES

ROLLED STEEL BEAM BRIDGES

OCTOBER, 2014

TEE PIER-HP10x57 SRL-1
STEEL PILE FOOTINGS
0° SKEW - SHEET 3

RS40-120-14

H IN FT.	℄ - ℄ ABUT. BRG.	PILING (HP10x57) NO. & LAYOUT		FOOTING SIZE
16 TO 18	160'-0	10A	206	4' x 8' x 25'
	180'-0	11A	208	
	200'-0	12A	204	
	220'-0	13A	205	
	240'-0	14A	204	
	260'-0	14A	218	
	280'-0	16A	213	
	300'-0	16C	218	4' x 10' x 25'
	320'-0	17A	215	4' x 11' x 27'
	340'-0	17B	213	4' x 12' x 27'
19 TO 21	160'-0	10A	213	4' x 8' x 25'
	180'-0	11A	215	
	200'-0	12A	211	
	220'-0	13A	211	
	240'-0	14A	210	
	260'-0	15A	215	
	280'-0	16B	214	4' x 9' x 25'
	300'-0	16D	220	4' x 11' x 25'
	320'-0	17B	208	4' x 12' x 27'
	340'-0	17B	217	
22 TO 24	160'-0	10B	215	4' x 9' x 25'
	180'-0	11B	216	
	200'-0	12B	212	
	220'-0	13B	212	
	240'-0	14B	210	
	260'-0	15B	215	
	280'-0	16B	218	
	300'-0	16F	209	4' x 12' x 27'
	320'-0	17B	212	
	340'-0	18A	211	
25 TO 27	160'-0	10C	218	4' x 10' x 25'
	180'-0	11C	218	
	200'-0	12C	213	
	220'-0	13C	213	
	240'-0	14C	211	
	260'-0	15C	215	
	280'-0	16C	217	
	300'-0	16F	212	4' x 12' x 27'
	320'-0	17B	215	
	340'-0	18A	214	
28 TO 30	160'-0	11C	210	4' x 10' x 25'
	180'-0	12C	206	
	200'-0	12C	218	
	220'-0	13C	217	
	240'-0	14C	214	
	260'-0	15C	218	
	280'-0	16D	217	4' x 11' x 25'
	300'-0	16F	215	4' x 12' x 27'
	320'-0	17B	217	
	340'-0	18A	216	
31 TO 33	160'-0	11D	212	4' x 11' x 25'
	180'-0	12D	207	
	200'-0	12D	219	
	220'-0	13D	218	
	240'-0	14D	215	
	260'-0	15D	218	
	280'-0	16E	216	4' x 11' x 27'
	300'-0	16F	217	4' x 12' x 27'
	320'-0	17B	219	
	340'-0	18A	218	
34 TO 36	160'-0	11E	213	4' x 11' x 27'
	180'-0	12E	209	
	200'-0	13E	204	
	220'-0	13E	218	
	240'-0	14E	215	
	260'-0	15E	218	
	280'-0	16F	208	4' x 12' x 27'
	300'-0	16F	220	
	320'-0	18A	211	
	340'-0	19A	213	

H IN FT.	℄ - ℄ ABUT. BRG.	PILING (HP10x57) NO. & LAYOUT	(1) LRFD Pu, STRENGTH I, DES. LOAD (KIPS)	FOOTING SIZE
37 TO 40	160'-0	12F	200	4' x 12' x 27'
	180'-0	12F	211	
	200'-0	13F	212	
	220'-0	14F	214	
	240'-0	15F	201	
	260'-0	15F	213	
	280'-0	16F	211	
	300'-0	17B	214	
	320'-0	18A	215	
	340'-0	19A	218	

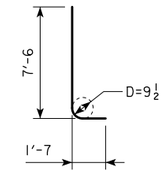

d2

NOTE: D = PIN DIAMETER.
DIMENSIONS ARE OUT TO OUT.

FOOTING SIZE	REINFORCING STEEL (ONE FOOTING) BAR	NO., SIZE & SPACING	LENGTH	WEIGHT (LB.)	TOTAL WEIGHT (LB.)	STRUCTURAL CONCRETE (CY)
4' x 8' x 25'	d2	50 - #9 AS SHOWN	9'-1	1544	3017	29.6
	f1	25 - #5 @ 1'-0	7'-8	200		
	f2	8 - #5 @ 1'-0	24'-8	206		
	g1	27 - #6 @ 0'-11	7'-8	311		
	g2	15 - #7 @ 0'-6	24'-8	756		
4' x 9' x 25'	d2	50 - #9 AS SHOWN	9'-1	1544	3254	33.3
	f1	25 - #5 @ 1'-0	8'-8	226		
	f2	9 - #5 @ 1'-0	24'-8	232		
	g1	28 - #7 @ 0'-10½	8'-8	496		
	g2	15 - #7 @ 0'-7	24'-8	756		
4' x 10' x 25'	d2	50 - #9 AS SHOWN	9'-1	1544	3532	37.0
	f1	25 - #5 @ 1'-0	9'-8	252		
	f2	10 - #5 @ 1'-0	24'-8	257		
	g1	28 - #8 @ 0'-10½	9'-8	723		
	g2	15 - #7 @ 0'-8	24'-8	756		
4' x 11' x 25'	d2	50 - #9 AS SHOWN	9'-1	1544	3874	40.7
	f1	25 - #5 @ 1'-0	10'-8	278		
	f2	11 - #5 @ 1'-0	24'-8	283		
	g1	27 - #9 @ 0'-11	10'-8	979		
	g2	12 - #8 @ 0'-11	24'-8	790		
4' x 11' x 27'	d2	50 - #9 AS SHOWN	9'-1	1544	4387	44.0
	f1	27 - #5 @ 1'-0	10'-8	300		
	f2	11 - #5 @ 1'-0	26'-8	306		
	g1	34 - #8 @ 0'-9½	10'-8	968		
	g2	14 - #9 @ 0'-9½	26'-8	1269		
4' x 12' x 27'	d2	50 - #9 AS SHOWN	9'-1	1544	4876	48.0
	f1	27 - #5 @ 1'-0	11'-8	329		
	f2	12 - #5 @ 1'-0	26'-8	334		
	g1	33 - #9 @ 0'-9½	11'-8	1309		
	g2	15 - #9 @ 0'-9½	26'-8	1360		

(1) NOTE: PU, STRENGTH I DESIGN LOAD (KIPS) IS NOT THE VALUE USED IN THE FIELD FOR DRIVING PILES.

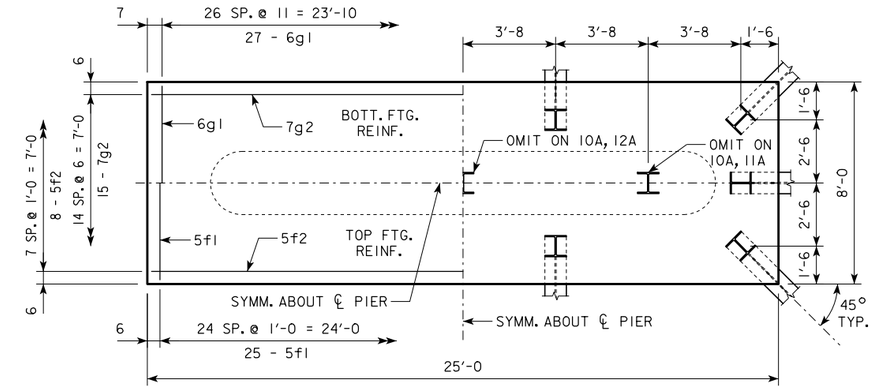

4'-0 x 8'-0 x 25'-0 FOR 10A, 11A & 12A

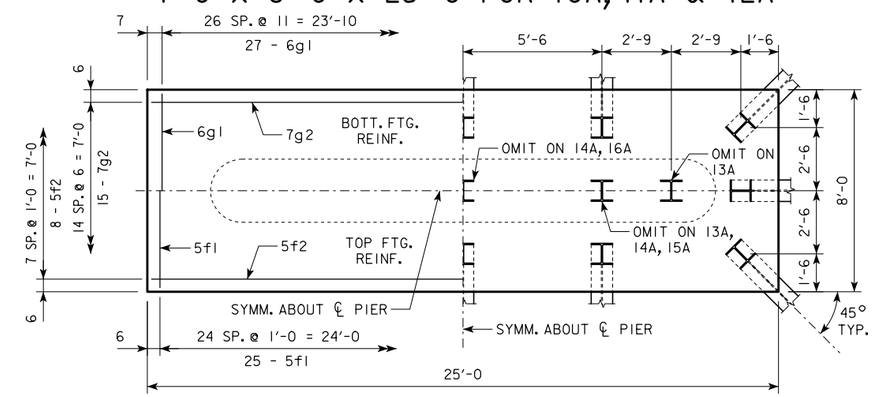

4'-0 x 8'-0 x 25'-0 FOR 13A, 14A, 15A & 16A

NOTE: THE REINFORCING STEEL QUANTITY IS TO BE INCLUDED ON THE SUMMARY QUANTITIES SHEET IN THE PLAN.

NOTE: THE CONCRETE QUANTITY IS TO BE INCLUDED ON THE SUMMARY QUANTITIES SHEET IN THE PLAN.

NOTE: THE PILE TYPE IS TO BE INCLUDED ON THE SUMMARY QUANTITIES SHEET IN THE PLAN.

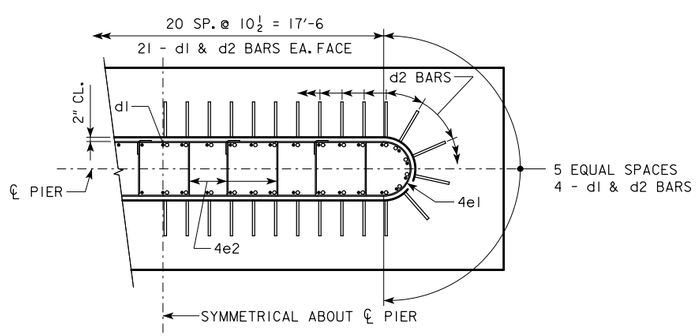

d2 BAR LAYOUT
(SEE SECTION A-A ON SHEET RS40-116-14.)

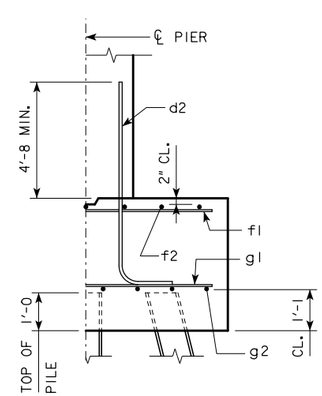

TYPICAL SECTION

FOOTING NOTES:

THESE FOOTINGS ARE DESIGNED AND DETAILED TO BE USED WITH THE CAP AND COLUMN DETAILS OF THE TEE PIERS AS SHOWN ON SHEET RS40-116-14.

BATTER PILES IN EXTERIOR ROWS 1:4 IN THE DIRECTION SHOWN.

STEEL PILING USED AS POINT BEARING SHALL HAVE A MINIMUM DISTANCE OF APPROXIMATELY 10 FEET FROM BOTTOM OF FOOTING TO TOP OF BEARING ROCK. THE PILE LAYOUTS ARE SUCH THAT THE DISTANCE CENTER TO CENTER OF ADJACENT PILING SHALL NOT EXCEED 8'-0.

PIER PILES SHALL BE DRIVEN TO VALUES SHOWN IN DESIGN PLANS.

LATEST REVISION DATE

APPROVED BY BRIDGE ENGINEER

IOWA DOT Highway Division

STANDARD DESIGN - 40' ROADWAY, 3 SPAN BRIDGES

ROLLED STEEL BEAM BRIDGES

OCTOBER, 2014

TEE PIER-HP10x57 SRL-2
STEEL PILE FOOTINGS
0° SKEW - SHEET 1

RS40-121-14

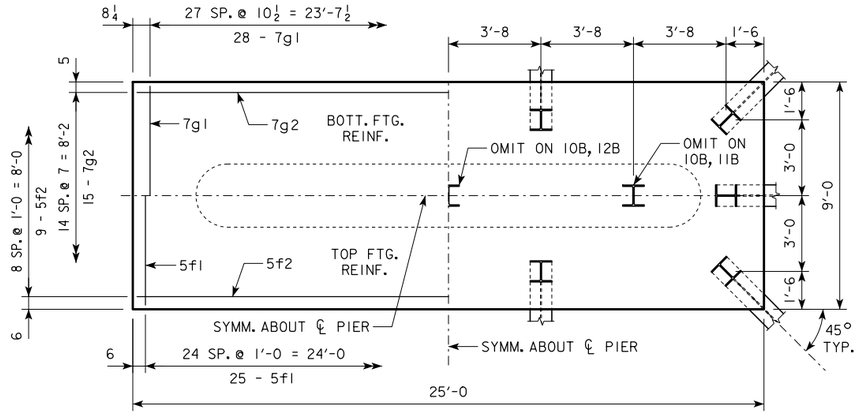

4'-0 x 9'-0 x 25'-0 FOR 10B, 11B & 12B

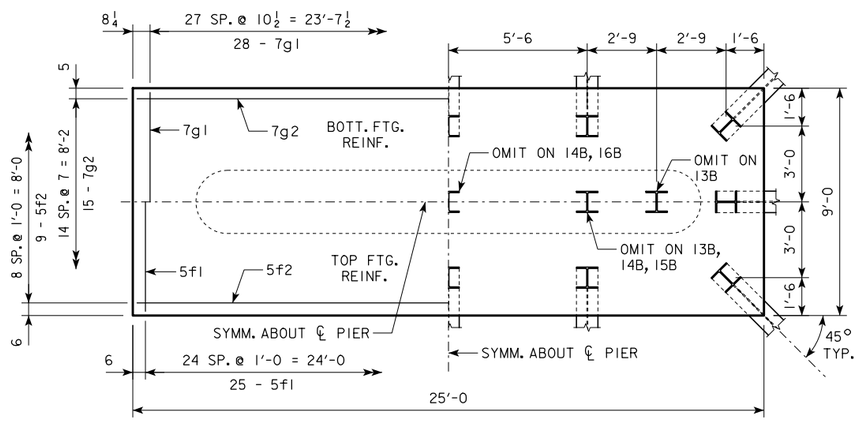

4'-0 x 9'-0 x 25'-0 FOR 13B, 14B, 15B & 16B

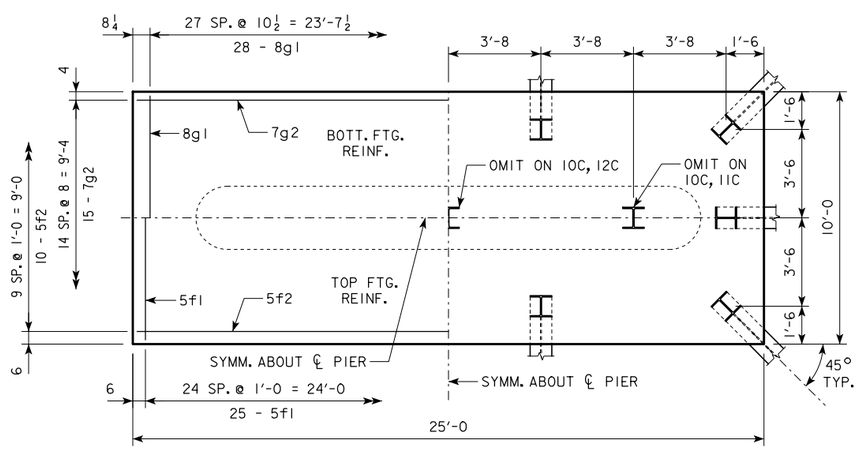

4'-0 x 10'-0 x 25'-0 FOR 10C, 11C & 12C

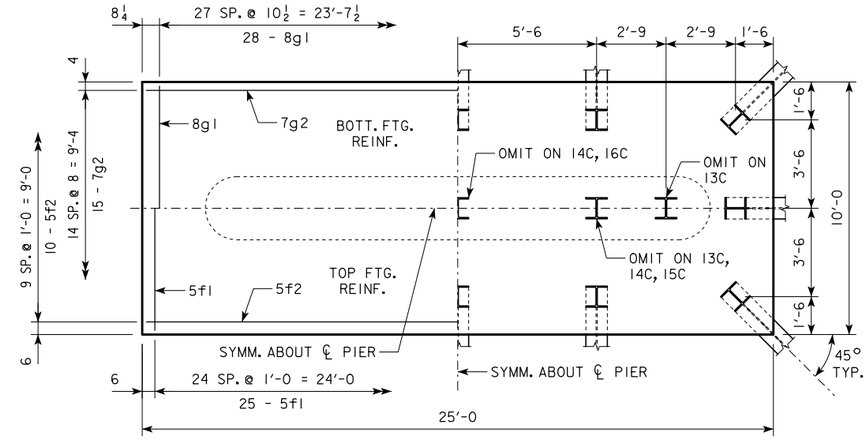

4'-0 x 10'-0 x 25'-0 FOR 13C, 14C, 15C & 16C

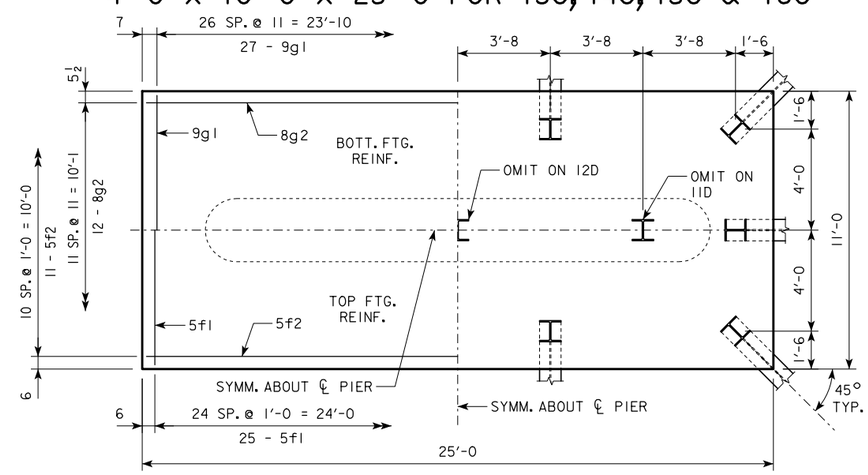

4'-0 x 11'-0 x 25'-0 FOR 11D & 12D

NOTE:
SEE SHEET RS40-121-14 FOR FOOTING NOTES.

LATEST REVISION DATE

APPROVED BY BRIDGE ENGINEER

IOWA DOT Highway Division

STANDARD DESIGN - 40' ROADWAY, 3 SPAN BRIDGES

ROLLED STEEL BEAM BRIDGES

OCTOBER, 2014

TEE PIER-HP10x57 SRL-2
STEEL PILE FOOTINGS
0° SKEW - SHEET 2

RS40-122-14

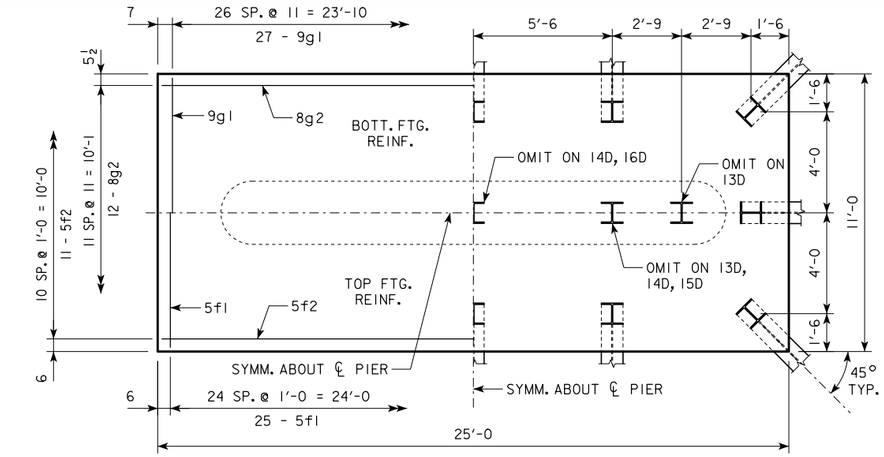

4'-0 x 11'-0 x 25'-0 FOR 13D, 14D, 15D & 16D

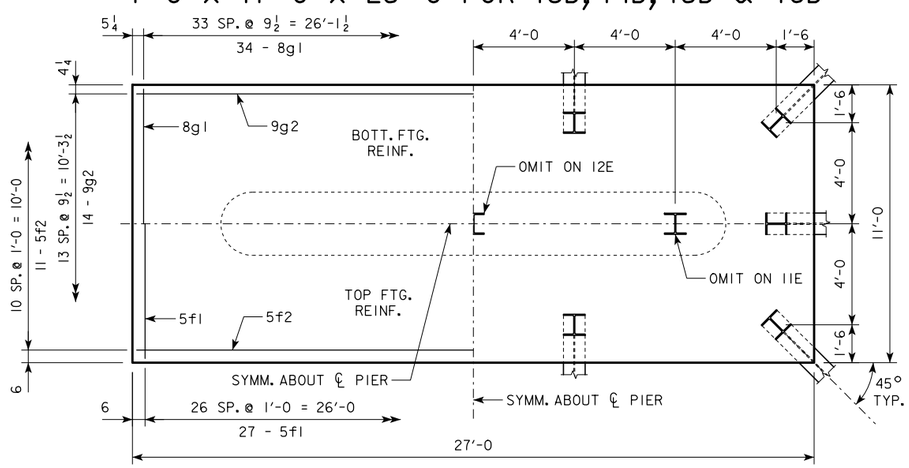

4'-0 x 11'-0 x 27'-0 FOR 11E & 12E

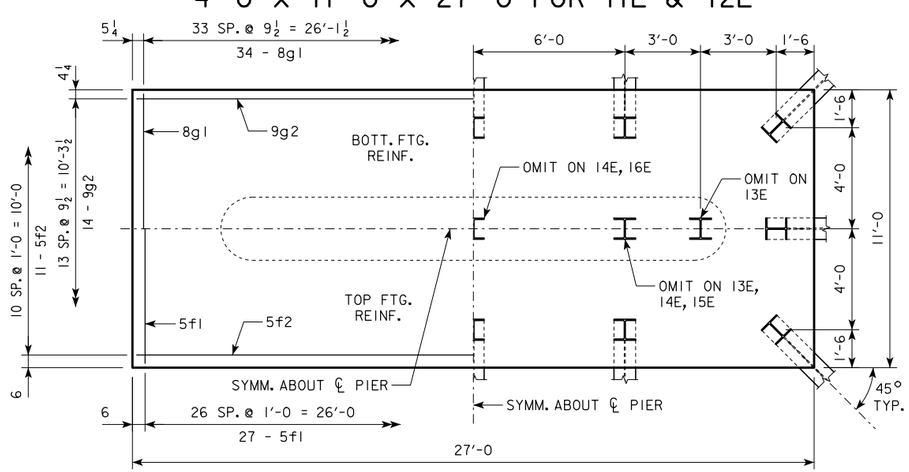

4'-0 x 11'-0 x 27'-0 FOR 13E, 14E, 15E, 16E & 17A

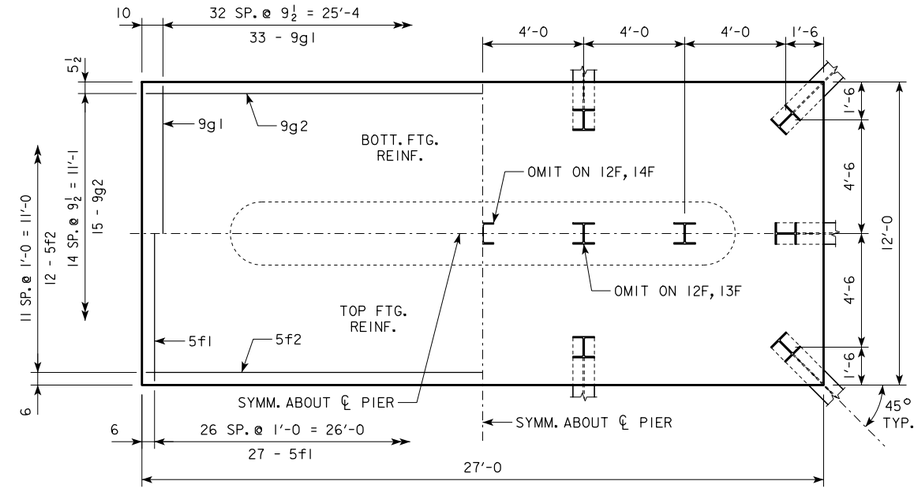

4'-0 x 12'-0 x 27'-0 FOR 12F, 13F & 14F

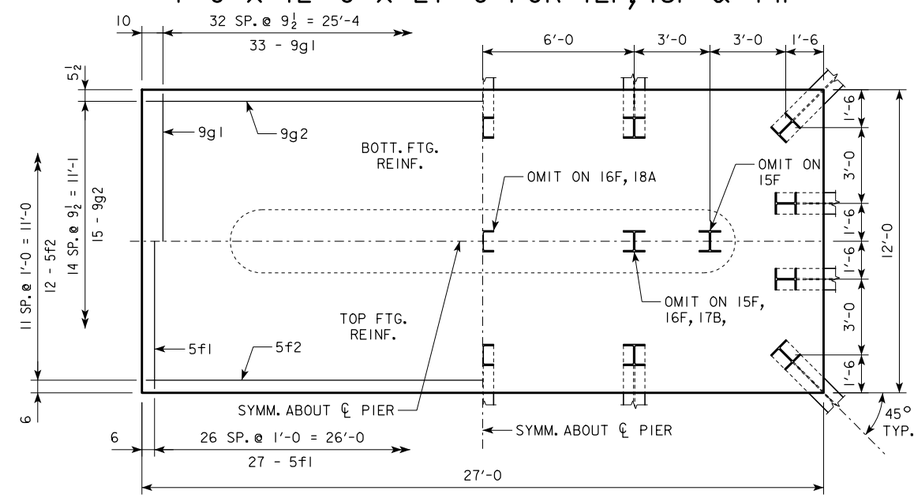

4'-0 x 12'-0 x 27'-0 FOR 15F, 16F, 17B, 18A & 19A

NOTE:
SEE SHEET RS40-121-14 FOR FOOTING NOTES.

LATEST REVISION DATE

APPROVED BY BRIDGE ENGINEER

IOWA DOT Highway Division

STANDARD DESIGN - 40' ROADWAY, 3 SPAN BRIDGES

ROLLED STEEL BEAM BRIDGES

OCTOBER, 2014

TEE PIER-HP10x57 SRL-2
STEEL PILE FOOTINGS
0° SKEW - SHEET 3

RS40-123-14

H IN FT.	℄ - ℄ ABUT. BRG.	FOOTING SIZE
16 TO 18	160′-0	4′ x 8′ x 26′
	180′-0	
	200′-0	4′ x 8′ x 28′
	220′-0	4′ x 9′ x 28′
	240′-0	
	260′-0	4′ x 9′ x 30′
	280′-0	4′ x 10′ x 30′
	300′-0	
	320′-0	
	340′-0	4′ x 10′ x 32′
19 TO 21	160′-0	4′ x 8′ x 26′
	180′-0	4′ x 8′ x 28′
	200′-0	
	220′-0	4′ x 9′ x 28′
	240′-0	
	260′-0	4′ x 9′ x 30′
	280′-0	4′ x 10′ x 30′
	300′-0	
	320′-0	4′ x 10′ x 32′
	340′-0	
22 TO 24	160′-0	4′ x 8′ x 26′
	180′-0	4′ x 8′ x 28′
	200′-0	
	220′-0	4′ x 9′ x 28′
	240′-0	4′ x 9′ x 30′
	260′-0	
	280′-0	4′ x 10′ x 30′
	300′-0	
	320′-0	4′ x 10′ x 32′
	340′-0	4′ x 11′ x 32′
25 TO 27	160′-0	4′ x 8′ x 28′
	180′-0	
	200′-0	4′ x 9′ x 28′
	220′-0	
	240′-0	4′ x 9′ x 30′
	260′-0	4′ x 10′ x 30′
	280′-0	
	300′-0	4′ x 10′ x 32′
	320′-0	
	340′-0	4′ x 11′ x 32′
28 TO 30	160′-0	4′ x 8′ x 28′
	180′-0	
	200′-0	4′ x 9′ x 28′
	220′-0	
	240′-0	4′ x 9′ x 30′
	260′-0	4′ x 10′ x 30′
	280′-0	
	300′-0	4′ x 10′ x 32′
	320′-0	
	340′-0	4′ x 11′ x 32′
31 TO 33	160′-0	4′ x 8′ x 28′
	180′-0	4′ x 9′ x 28′
	200′-0	
	220′-0	4′ x 9′ x 30′
	240′-0	
	260′-0	4′ x 10′ x 30′
	280′-0	
	300′-0	4′ x 10′ x 32′
	320′-0	4′ x 11′ x 32′
	340′-0	
34 TO 36	160′-0	4′ x 8′ x 28′
	180′-0	4′ x 9′ x 28′
	200′-0	
	220′-0	4′ x 9′ x 30′
	240′-0	4′ x 10′ x 30′
	260′-0	
	280′-0	4′ x 10′ x 32′
	300′-0	
	320′-0	4′ x 11′ x 32′
	340′-0	

H IN FT.	℄ - ℄ ABUT. BRG.	FOOTING SIZE
37 TO 40	160′-0	4′ x 9′ x 28′
	180′-0	
	200′-0	4′ x 9′ x 30′
	220′-0	
	240′-0	4′ x 10′ x 30′
	260′-0	
	280′-0	4′ x 10′ x 32′
	300′-0	4′ x 11′ x 32′
	320′-0	
	340′-0	

FOOTING SIZE	REINFORCING STEEL (ONE FOOTING)					STRUCTURAL CONCRETE (CY)
	BAR	NO., SIZE & SPACING	LENGTH	WEIGHT (LB.)	TOTAL WEIGHT (LB.)	
4′ x 8′ x 26′	d2	50 - #9 AS SHOWN	9′-11	1686	2793	30.8
	f1	26 - #5 @ 1′-0	7′-8	208		
	f2	8 - #5 @ 1′-0	25′-8	214		
	g1	26 - #6 @ 1′-0	7′-8	299		
	g2	10 - #6 @ 0′-10	25′-8	386		
4′ x 8′ x 28′	d2	50 - #9 AS SHOWN	9′-11	1686	3202	33.2
	f1	28 - #5 @ 1′-0	7′-8	224		
	f2	8 - #5 @ 1′-0	27′-8	231		
	g1	28 - #6 @ 1′-0	7′-8	322		
	g2	10 - #8 @ 0′-10	27′-8	739		
4′ x 9′ x 28′	d2	50 - #9 AS SHOWN	9′-11	1686	3455	37.3
	f1	28 - #5 @ 1′-0	8′-8	253		
	f2	9 - #5 @ 1′-0	27′-8	260		
	g1	34 - #6 @ 0′-10	8′-8	443		
	g2	11 - #8 @ 0′-10	27′-8	813		
4′ x 9′ x 30′	d2	50 - #9 AS SHOWN	9′-11	1686	4028	40.0
	f1	30 - #5 @ 1′-0	8′-8	271		
	f2	9 - #5 @ 1′-0	29′-8	278		
	g1	37 - #6 @ 0′-9½	8′-8	482		
	g2	13 - #9 @ 0′-8½	29′-8	1311		
4′ x 10′ x 30′	d2	50 - #9 AS SHOWN	9′-11	1686	4362	44.4
	f1	30 - #5 @ 1′-0	9′-8	302		
	f2	10 - #5 @ 1′-0	29′-8	309		
	g1	45 - #6 @ 0′-8	9′-8	653		
	g2	14 - #9 @ 0′-8½	29′-8	1412		
4′ x 10′ x 32′	d2	50 - #9 AS SHOWN	9′-11	1686	4866	47.4
	f1	32 - #5 @ 1′-0	9′-8	323		
	f2	10 - #5 @ 1′-0	31′-8	330		
	g1	48 - #6 @ 0′-8	9′-8	697		
	g2	17 - #9 @ 0′-7	31′-8	1830		
4′ x 11′ x 32′	d2	50 - #9 AS SHOWN	9′-11	1686	5452	52.1
	f1	32 - #5 @ 1′-0	10′-8	356		
	f2	11 - #5 @ 1′-0	31′-8	363		
	g1	46 - #7 @ 0′-8	10′-8	1003		
	g2	15 - #10 @ 0′-9	31′-8	2044		

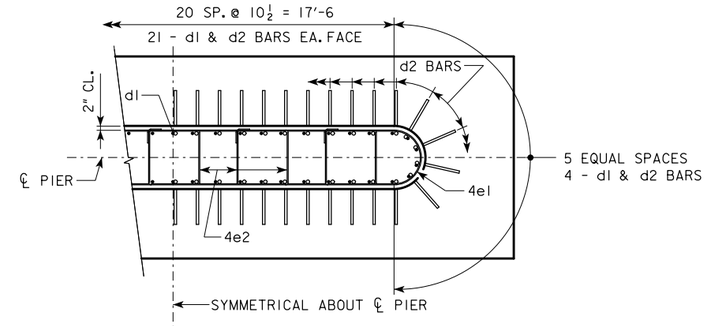

d2 BAR LAYOUT

(SEE SECTION A-A ON SHEET RS40-116-14.)

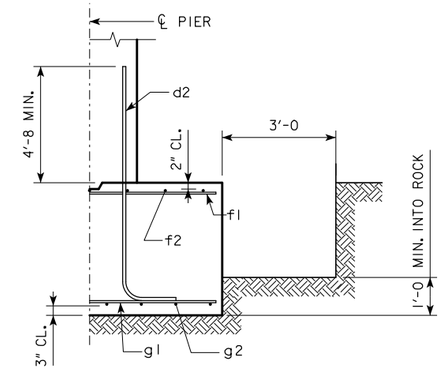

TYPICAL SECTION

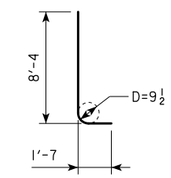

d2

NOTE: D = PIN DIAMETER.
DIMENSIONS ARE OUT TO OUT.

NOTE: THE REINFORCING STEEL QUANTITY IS TO BE INCLUDED ON THE SUMMARY QUANTITIES SHEET IN THE PLAN.

NOTE: THE CONCRETE QUANTITY IS TO BE INCLUDED ON THE SUMMARY QUANTITIES SHEET IN THE PLAN.

FOOTING NOTES:

THESE SPREAD FOOTINGS ARE DESIGNED AND DETAILED TO BE USED WITH THE CAP AND COLUMN DETAILS OF THE TEE PIERS AS SHOWN ON SHEET RS40-116-14.

THESE SPREAD FOOTINGS SHALL EXTEND AT LEAST 12 INCHES INTO SUITABLE FOUNDATION ROCK AND THE LAST 12 INCHES OF ROCK EXCAVATION SHALL BE TO NEAT LINES OF MASONRY. THE FOUNDATION ROCK SHALL HAVE A MINIMUM LRFD NOMINAL BEARING RESISTANCE OF 30 KIPS PER SQUARE FOOT (ALLOWABLE BEARING VALUE OF AT LEAST 10 KIPS PER SQUARE FOOT).

LATEST REVISION DATE

APPROVED BY BRIDGE ENGINEER

IOWA DOT Highway Division

STANDARD DESIGN - 40′ ROADWAY, 3 SPAN BRIDGES

ROLLED STEEL BEAM BRIDGES

OCTOBER, 2014

TEE PIER - SPREAD FOOTINGS

0° SKEW - SHEET 1

RS40-124-14

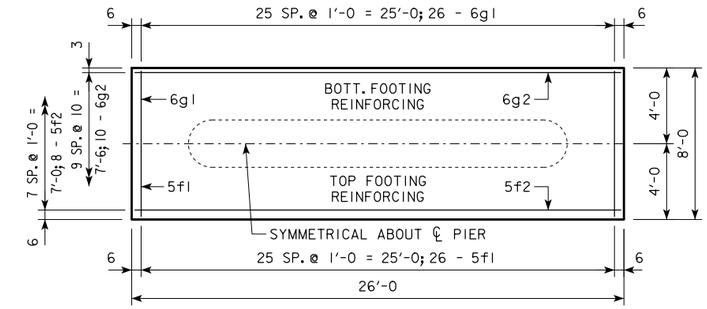

4'-0 x 8'-0 x 26'-0

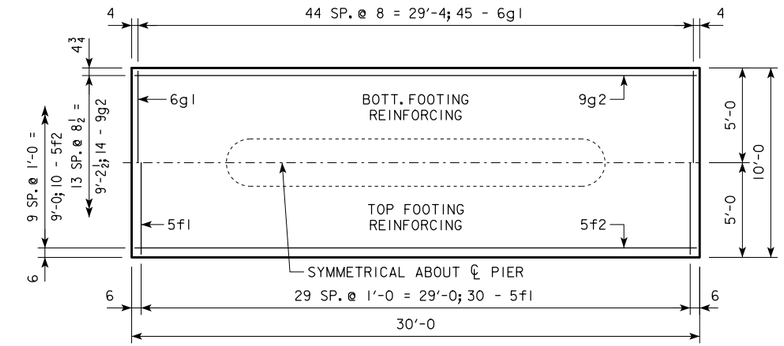

4'-0 x 10'-0 x 30'-0

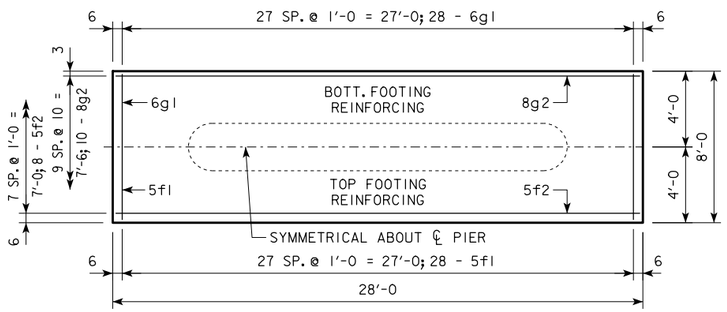

4'-0 x 8'-0 x 28'-0

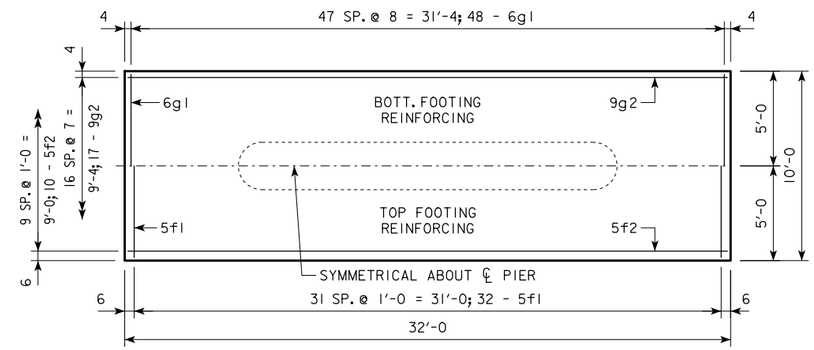

4'-0 x 10'-0 x 32'-0

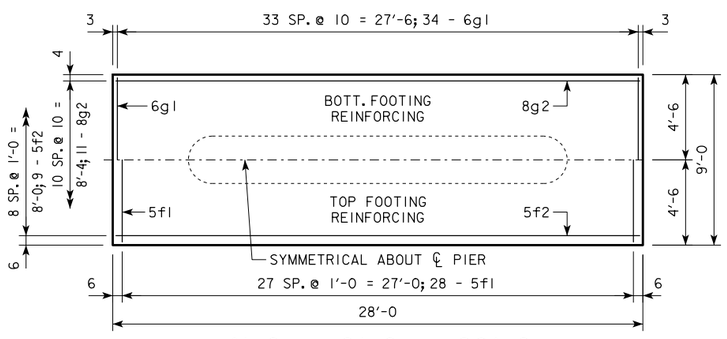

4'-0 x 9'-0 x 28'-0

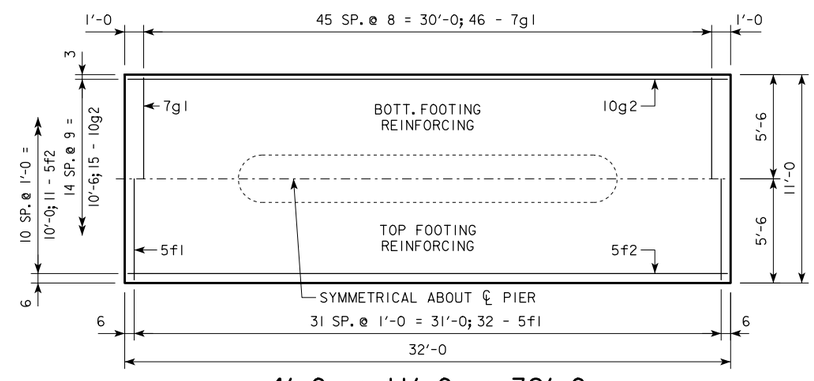

4'-0 x 11'-0 x 32'-0

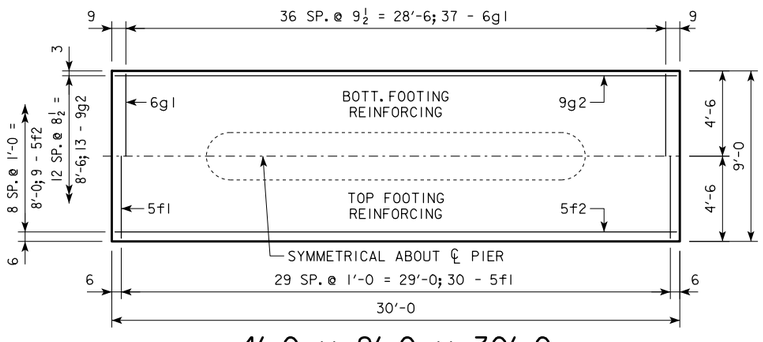

4'-0 x 9'-0 x 30'-0

NOTE:
SEE SHEET RS40-124-14 FOR FOOTING NOTES.

LATEST REVISION DATE

APPROVED BY BRIDGE ENGINEER

IOWA DOT Highway Division

STANDARD DESIGN - 40' ROADWAY, 3 SPAN BRIDGES

ROLLED STEEL BEAM BRIDGES

OCTOBER, 2014

TEE PIER - SPREAD FOOTINGS

0° SKEW - SHEET 2

RS40-125-14

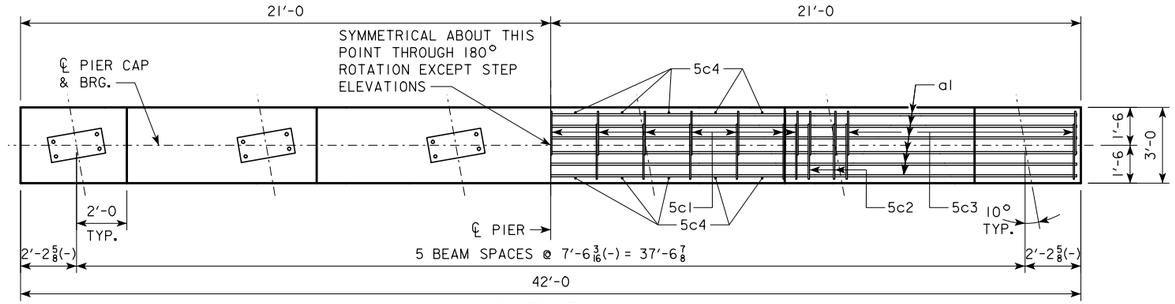

CAP PLAN

NOTE:
ANCHOR BOLTS REQUIRED FOR FIXED PIER BEARINGS ONLY. FOR BOLT AND BEARING SIZES, SEE RS40-093-14, RS40-094-14 OR RS40-095-14.

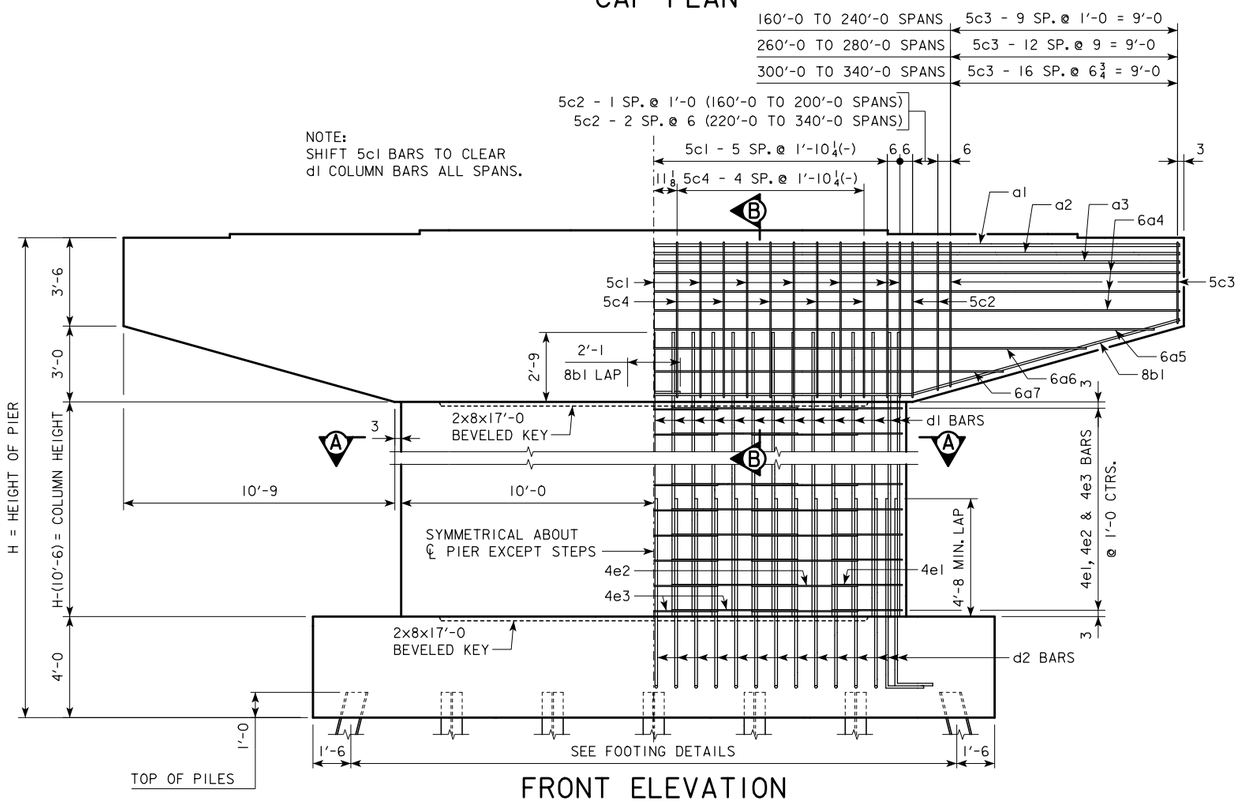

FRONT ELEVATION

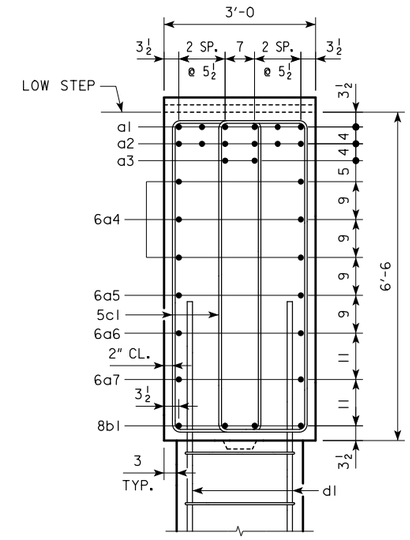

SECTION B-B

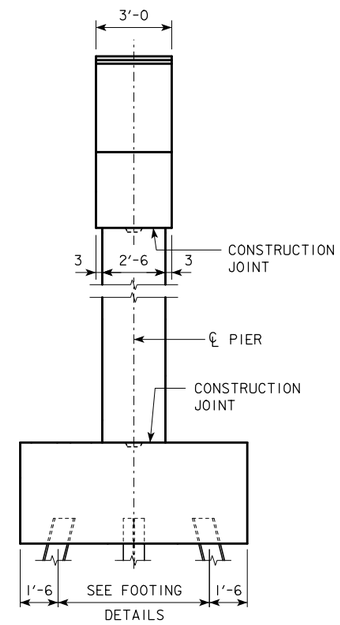

END ELEVATION

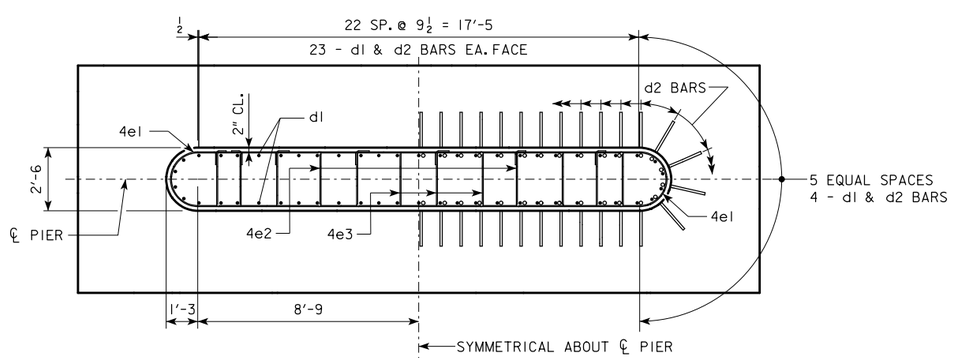

SECTION A-A

LATEST REVISION DATE

APPROVED BY BRIDGE ENGINEER

IOWA DOT Highway Division

STANDARD DESIGN - 40' ROADWAY, 3 SPAN BRIDGES

ROLLED STEEL BEAM BRIDGES

OCTOBER, 2014

TEE PIER CAP & COLUMN DETAILS

10° SKEW

RS40-126-14

CAP

REINFORCING STEEL			℄ - ℄ ABUT. BEARINGS	160'-0			180'-0			200'-0			220'-0			240'-0			260'-0			280'-0			300'-0			320'-0			340'-0		
BAR	LENGTH	SHAPE		NO.	SIZE	WEIGHT	NO.	SIZE	WEIGHT	NO.	SIZE	WEIGHT	NO.	SIZE	WEIGHT	NO.	SIZE	WEIGHT	NO.	SIZE	WEIGHT	NO.	SIZE	WEIGHT	NO.	SIZE	WEIGHT	NO.	SIZE	WEIGHT	NO.	SIZE	WEIGHT
a1	41'-8			6	9	850	6	9	850	6	9	850	6	10	1076	6	10	1076	6	10	1076	6	11	1328	6	11	1328	6	11	1328	6	11	1328
a2	41'-8			6	8	668	6	8	668	6	9	850	6	9	850	6	10	1076	6	10	1076	6	10	1076	6	11	1328	6	11	1328	6	11	1328
a3	41'-8			--	--	--	--	--	--	--	--	--	--	--	--	--	--	--	--	--	--	--	--	--	--	--	--	2	6	125	2	9	283
6a4	41'-8			6	6	376	6	6	376	6	6	376	6	6	376	6	6	376	6	6	376	6	6	376	6	6	376	6	6	376	6	6	376
6a5	39'-7			2	6	119	2	6	119	2	6	119	2	6	119	2	6	119	2	6	119	2	6	119	2	6	119	2	6	119	2	6	119
6a6	34'-3			2	6	103	2	6	103	2	6	103	2	6	103	2	6	103	2	6	103	2	6	103	2	6	103	2	6	103	2	6	103
6a7	27'-8			2	6	83	2	6	83	2	6	83	2	6	83	2	6	83	2	6	83	2	6	83	2	6	83	2	6	83	2	6	83
8b1	22'-4			8	8	477	8	8	477	8	8	477	8	8	477	8	8	477	8	8	477	8	8	477	8	8	477	8	8	477	8	8	477
5c1	16'-10			26	5	456	26	5	456	26	5	456	26	5	456	26	5	456	26	5	456	26	5	456	26	5	456	26	5	456	26	5	456
5c2	VARIES			8	5	138	8	5	138	8	5	138	12	5	207	12	5	207	12	5	207	12	5	207	12	5	207	12	5	207	12	5	207
5c3	VARIES			40	5	563	40	5	563	40	5	563	40	5	563	40	5	563	52	5	732	52	5	732	68	5	957	68	5	957	68	5	957
5c4	6'-8			20	5	139	20	5	139	20	5	139	20	5	139	20	5	139	20	5	139	20	5	139	20	5	139	20	5	139	20	5	139
① TOTAL (LB.)				3972			3972			4154			4449			4675			4844			5096			5573			5698			5856		
STRUCTURAL CONCRETE (CY)				27.7			27.7			27.7			27.7			27.7			27.7			27.7			27.7			27.7			27.7		

BENT BAR DETAILS

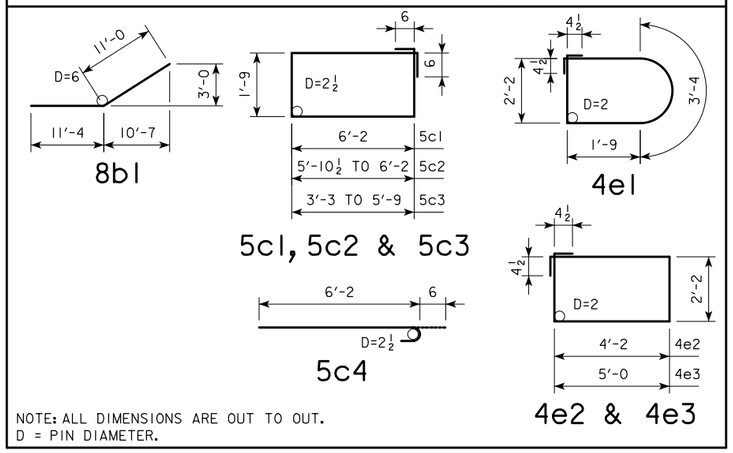

NOTE: ALL DIMENSIONS ARE OUT TO OUT.
D = PIN DIAMETER.

NOTE: THE REINFORCING STEEL QUANTITY IS TO BE INCLUDED ON THE SUMMARY QUANTITIES SHEET IN THE PLAN.

NOTE: THE CONCRETE QUANTITY IS TO BE INCLUDED ON THE SUMMARY QUANTITIES SHEET IN THE PLAN.

NOTE: THE PILE TYPE IS TO BE INCLUDED ON THE SUMMARY QUANTITIES SHEET IN THE PLAN.

COLUMN

H IN FEET	COLUMN HEIGHT	STRUCTURAL CONCRETE (CY)	REINFORCING STEEL																	TOTAL WEIGHT (LB.)
			d1 BAR				4e1 BAR				4e2 BAR				4e3 BAR					
			NO.	SIZE	LENGTH	WEIGHT	NO.	SIZE	LENGTH	WEIGHT	NO.	SIZE	LENGTH	WEIGHT	NO.	SIZE	LENGTH	WEIGHT		
16	5'-6	9.9	54	9	8'-3	1515	12	4	9'-9	78	12	4	13'-5	108	18	4	15'-1	181		1882
17	6'-6	11.7	54	9	9'-3	1698	14	4	9'-9	91	14	4	13'-5	125	21	4	15'-1	212		2126
18	7'-6	13.5	54	9	10'-3	1882	16	4	9'-9	104	16	4	13'-5	143	24	4	15'-1	242		2371
19	8'-6	15.3	54	9	11'-3	2066	18	4	9'-9	117	18	4	13'-5	161	27	4	15'-1	272		2616
20	9'-6	17.1	54	9	12'-3	2249	20	4	9'-9	130	20	4	13'-5	179	30	4	15'-1	302		2860
21	10'-6	18.9	54	9	13'-3	2433	22	4	9'-9	143	22	4	13'-5	197	33	4	15'-1	332		3105
22	11'-6	20.7	54	9	14'-3	2616	24	4	9'-9	156	24	4	13'-5	215	36	4	15'-1	363		3350
23	12'-6	22.5	54	9	15'-3	2800	26	4	9'-9	169	26	4	13'-5	233	39	4	15'-1	393		3595
24	13'-6	24.3	54	9	16'-3	2984	28	4	9'-9	182	28	4	13'-5	251	42	4	15'-1	423		3840
25	14'-6	26.1	54	9	17'-3	3167	30	4	9'-9	195	30	4	13'-5	269	45	4	15'-1	453		4084
26	15'-6	27.9	54	9	18'-3	3351	32	4	9'-9	208	32	4	13'-5	287	48	4	15'-1	484		4330
27	16'-6	29.7	54	9	19'-3	3534	34	4	9'-9	221	34	4	13'-5	305	51	4	15'-1	514		4574
28	17'-6	31.5	54	9	20'-3	3718	36	4	9'-9	234	36	4	13'-5	323	54	4	15'-1	544		4819
29	18'-6	33.3	54	9	21'-3	3902	38	4	9'-9	247	38	4	13'-5	341	57	4	15'-1	574		5064
30	19'-6	35.1	54	9	22'-3	4085	40	4	9'-9	261	40	4	13'-5	358	60	4	15'-1	605		5309
31	20'-6	36.9	54	9	23'-3	4269	42	4	9'-9	274	42	4	13'-5	376	63	4	15'-1	635		5554
32	21'-6	38.7	54	9	24'-3	4452	44	4	9'-9	287	44	4	13'-5	394	66	4	15'-1	665		5798
33	22'-6	40.5	54	9	25'-3	4636	46	4	9'-9	300	46	4	13'-5	412	69	4	15'-1	695		6043
34	23'-6	42.4	54	9	26'-3	4820	48	4	9'-9	313	48	4	13'-5	430	72	4	15'-1	725		6288
35	24'-6	44.2	54	9	27'-3	5003	50	4	9'-9	326	50	4	13'-5	448	75	4	15'-1	756		6533
36	25'-6	46.0	54	9	28'-3	5187	52	4	9'-9	339	52	4	13'-5	466	78	4	15'-1	786		6778
37	26'-6	47.8	54	9	29'-3	5370	54	4	9'-9	352	54	4	13'-5	484	81	4	15'-1	816		7022
38	27'-6	49.6	54	9	30'-3	5554	56	4	9'-9	365	56	4	13'-5	502	84	4	15'-1	846		7267
39	28'-6	51.4	54	9	31'-3	5738	58	4	9'-9	378	58	4	13'-5	520	87	4	15'-1	877		7513
40	29'-6	53.2	54	9	32'-3	5921	60	4	9'-9	391	60	4	13'-5	538	90	4	15'-1	907		7757

PIER NOTES:

SEE "TEE PIER NOTES" ON RS40-003-14 FOR NOTES REGARDING APPLICATION OF THESE PIER STANDARDS.

MINIMUM CLEAR DISTANCE FROM FACE OF CONCRETE TO NEAR REINFORCING BAR SHALL BE 2 INCHES UNLESS OTHERWISE NOTED OR SHOWN.

① SEE SHEET RS40-166-14 FOR STEP REINFORCING STEEL QUANTITIES AND DETAILS.

LATEST REVISION DATE

APPROVED BY BRIDGE ENGINEER

IOWA DOT Highway Division

STANDARD DESIGN - 40' ROADWAY, 3 SPAN BRIDGES

ROLLED STEEL BEAM BRIDGES

OCTOBER, 2014

TEE PIER CAP & COLUMN DETAILS
10° SKEW

RS40-127-14

H IN FT.	℄ - ℄ ABUT. BRG.	PILING (HP10x57) NO. & LAYOUT	PILING (HP10x57) ① LRFD Pu, STRENGTH I, DES. LOAD (KIPS)	FOOTING SIZE
16 TO 18	160'-0	16A	139	4' x 9' x 24'
	180'-0	17A	144	
	200'-0	18A	145	4' x 10' x 24'
	220'-0	18D	144	4' x 11' x 28'
	240'-0	20A	144	
	260'-0	21B	143	4' x 11' x 30'
	280'-0	23A	143	
	300'-0	23B	146	4' x 12' x 32'
	320'-0	25A	144	
	340'-0	26A	146	
19 TO 21	160'-0	16B	142	4' x 10' x 24'
	180'-0	17B	146	
	200'-0	18B	146	4' x 10' x 26'
	220'-0	19A	143	4' x 11' x 28'
	240'-0	21A	143	
	260'-0	21B	146	4' x 11' x 30'
	280'-0	23A	146	
	300'-0	24B	143	4' x 12' x 32'
	320'-0	25A	147	
	340'-0	26B	142	4' x 14' x 32'
22 TO 24	160'-0	16C	143	4' x 10' x 26'
	180'-0	17C	147	
	200'-0	18D	140	4' x 11' x 28'
	220'-0	19A	146	
	240'-0	21A	146	
	260'-0	22A	143	4' x 11' x 30'
	280'-0	23B	143	4' x 12' x 32'
	300'-0	24B	145	
	320'-0	25B	143	4' x 14' x 32'
	340'-0	26B	144	
25 TO 27	160'-0	16D	145	4' x 11' x 26'
	180'-0	18C	143	
	200'-0	18D	143	4' x 11' x 28'
	220'-0	20A	143	
	240'-0	21B	142	4' x 11' x 30'
	260'-0	22A	146	
	280'-0	23B	145	4' x 12' x 32'
	300'-0	25A	144	
	320'-0	25B	145	4' x 14' x 32'
	340'-0	26B	146	
28 TO 30	160'-0	17D	143	4' x 11' x 26'
	180'-0	18C	146	
	200'-0	18D	146	4' x 11' x 28'
	220'-0	20A	146	
	240'-0	21B	145	4' x 11' x 30'
	260'-0	23A	144	
	280'-0	24B	141	4' x 12' x 32'
	300'-0	25A	145	
	320'-0	26B	142	4' x 14' x 32'
	340'-0	27A	144	
31 TO 33	160'-0	17D	146	4' x 11' x 26'
	180'-0	18D	141	4' x 11' x 28'
	200'-0	19A	144	
	220'-0	21A	144	
	240'-0	22A	141	4' x 11' x 30'
	260'-0	23A	146	
	280'-0	24B	143	4' x 12' x 32'
	300'-0	26A	143	
	320'-0	26B	143	4' x 14' x 32'
	340'-0	27A	146	
34 TO 36	160'-0	17E	144	4' x 11' x 28'
	180'-0	18D	144	
	200'-0	19A	147	
	220'-0	21A	146	
	240'-0	22A	144	4' x 11' x 30'
	260'-0	24A	144	
	280'-0	24B	145	4' x 12' x 32'
	300'-0	26A	145	
	320'-0	26B	145	4' x 14' x 32'
	340'-0	28A	143	

H IN FT.	℄ - ℄ ABUT. BRG.	PILING (HP10x57) NO. & LAYOUT	PILING (HP10x57) ① LRFD Pu, STRENGTH I, DES. LOAD (KIPS)	FOOTING SIZE
37 TO 40	160'-0	18D	139	4' x 11' x 28'
	180'-0	19A	142	
	200'-0	20A	144	
	220'-0	21B	142	4' x 11' x 30'
	240'-0	22A	146	
	260'-0	24A	147	
	280'-0	25A	143	4' x 12' x 32'
	300'-0	26A	147	
	320'-0	26B	147	4' x 14' x 32'
	340'-0	28A	145	

FOOTING SIZE	REINFORCING STEEL (ONE FOOTING) BAR	NO., SIZE & SPACING	LENGTH	WEIGHT (LB.)	TOTAL WEIGHT (LB.)	STRUCTURAL CONCRETE (CY)
4' x 9' x 24'	d2	54 - #9 AS SHOWN	9'-1	1668	2818	32.0
	f1	24 - #5 @ 1'-0	8'-8	217		
	f2	9 - #5 @ 1'-0	23'-8	222		
	g1	30 - #6 @ 0'-9½	8'-8	391		
	g2	9 - #6 @ 1'-0	23'-8	320		
4' x 10' x 24'	d2	54 - #9 AS SHOWN	9'-1	1668	3085	35.6
	f1	24 - #5 @ 1'-0	9'-8	242		
	f2	10 - #5 @ 1'-0	23'-8	247		
	g1	29 - #7 @ 0'-10	9'-8	573		
	g2	10 - #6 @ 1'-0	23'-8	355		
4' x 10' x 26'	d2	54 - #9 AS SHOWN	9'-1	1668	3453	38.5
	f1	26 - #5 @ 1'-0	9'-8	262		
	f2	10 - #5 @ 1'-0	25'-8	268		
	g1	29 - #7 @ 0'-10½	9'-8	573		
	g2	13 - #7 @ 0'-9½	25'-8	682		
4' x 11' x 26'	d2	54 - #9 AS SHOWN	9'-1	1668	3702	42.4
	f1	26 - #5 @ 1'-0	10'-8	289		
	f2	11 - #5 @ 1'-0	25'-8	294		
	g1	27 - #8 @ 0'-11½	10'-8	769		
	g2	13 - #7 @ 0'-10½	25'-8	682		
4' x 11' x 28'	d2	54 - #9 AS SHOWN	9'-1	1668	4288	45.6
	f1	28 - #5 @ 1'-0	10'-8	312		
	f2	11 - #5 @ 1'-0	27'-8	317		
	g1	31 - #8 @ 0'-11	10'-8	883		
	g2	15 - #8 @ 0'-9	27'-8	1108		
4' x 11' x 30'	d2	54 - #9 AS SHOWN	9'-1	1668	4842	48.9
	f1	30 - #5 @ 1'-0	10'-8	334		
	f2	11 - #5 @ 1'-0	29'-8	340		
	g1	30 - #9 @ 1'-0	10'-8	1088		
	g2	14 - #9 @ 0'-9½	29'-8	1412		
4' x 12' x 32'	d2	54 - #9 AS SHOWN	9'-1	1668	6004	56.9
	f1	32 - #5 @ 1'-0	11'-8	389		
	f2	12 - #5 @ 1'-0	31'-8	396		
	g1	38 - #9 @ 0'-10	11'-8	1507		
	g2	15 - #10 @ 0'-9½	31'-8	2044		
4' x 14' x 32'	d2	54 - #9 AS SHOWN	9'-1	1668	6987	66.4
	f1	32 - #5 @ 1'-0	13'-8	456		
	f2	14 - #5 @ 1'-0	31'-8	462		
	g1	39 - #9 @ 0'-9½	13'-8	1812		
	g2	19 - #10 @ 0'-9	31'-8	2589		

① NOTE: PU, STRENGTH I DESIGN LOAD (KIPS) IS NOT THE VALUE USED IN THE FIELD FOR DRIVING PILES.

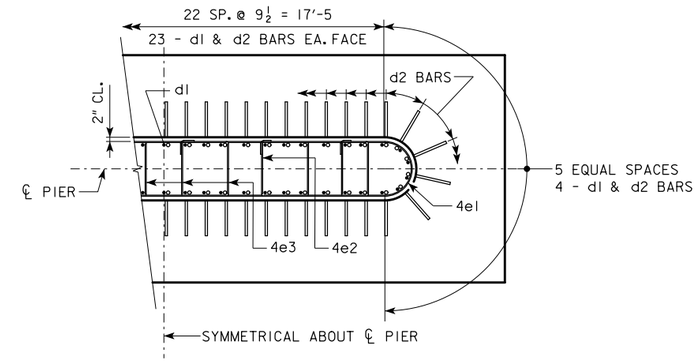

d2 BAR LAYOUT

(SEE SECTION A-A ON SHEET RS40-126-14.)

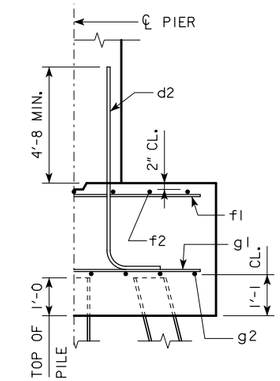

TYPICAL SECTION

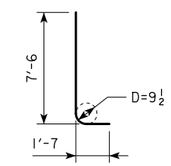

d2

NOTE: D = PIN DIAMETER.
DIMENSIONS ARE OUT TO OUT.

NOTE: THE REINFORCING STEEL QUANTITY IS TO BE INCLUDED ON THE SUMMARY QUANTITIES SHEET IN THE PLAN.

NOTE: THE CONCRETE QUANTITY IS TO BE INCLUDED ON THE SUMMARY QUANTITIES SHEET IN THE PLAN.

NOTE: THE PILE TYPE IS TO BE INCLUDED ON THE SUMMARY QUANTITIES SHEET IN THE PLAN.

FOOTING NOTES:

THESE FOOTINGS ARE DESIGNED AND DETAILED TO BE USED WITH THE CAP AND COLUMN DETAILS OF THE TEE PIERS AS SHOWN ON SHEET RS40-126-14.

BATTER PILES IN EXTERIOR ROWS 1:4 IN THE DIRECTION SHOWN.

STEEL PILING USED AS POINT BEARING SHALL HAVE A MINIMUM DISTANCE OF APPROXIMATELY 10 FEET FROM BOTTOM OF FOOTING TO TOP OF BEARING ROCK. THE PILE LAYOUTS ARE SUCH THAT THE DISTANCE CENTER TO CENTER OF ADJACENT PILING SHALL NOT EXCEED 8'-0.

PIER PILES SHALL BE DRIVEN TO VALUES SHOWN IN DESIGN PLANS.

LATEST REVISION DATE

APPROVED BY BRIDGE ENGINEER

IOWA DOT Highway Division

STANDARD DESIGN - 40' ROADWAY, 3 SPAN BRIDGES

ROLLED STEEL BEAM BRIDGES

OCTOBER, 2014

TEE PIER-HP10x57 SRL-1
STEEL PILE FOOTINGS
10° SKEW - SHEET 1

RS40-128-14

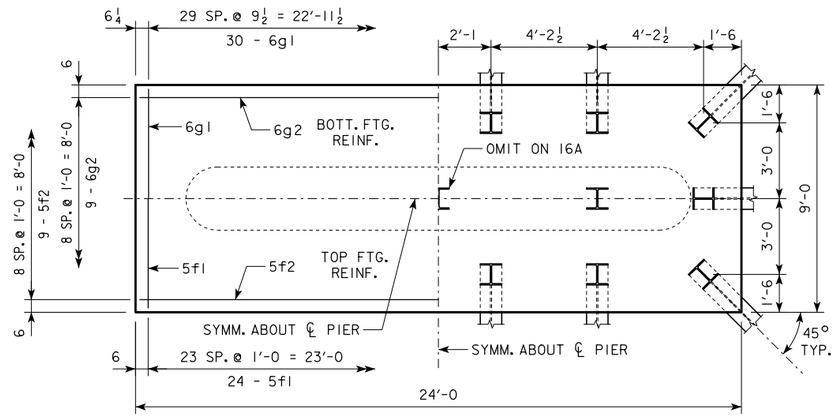

4'-0 x 9'-0 x 24'-0 FOR 16A & 17A

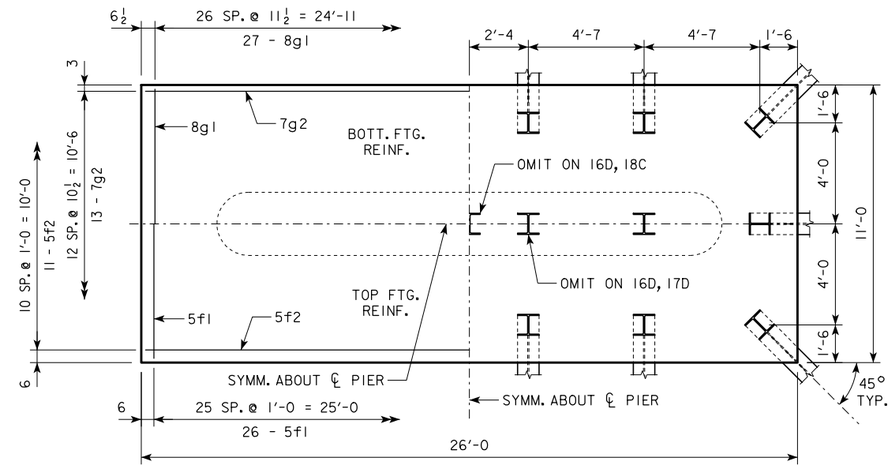

4'-0 x 11'-0 x 26'-0 FOR 16D, 17D & 18C

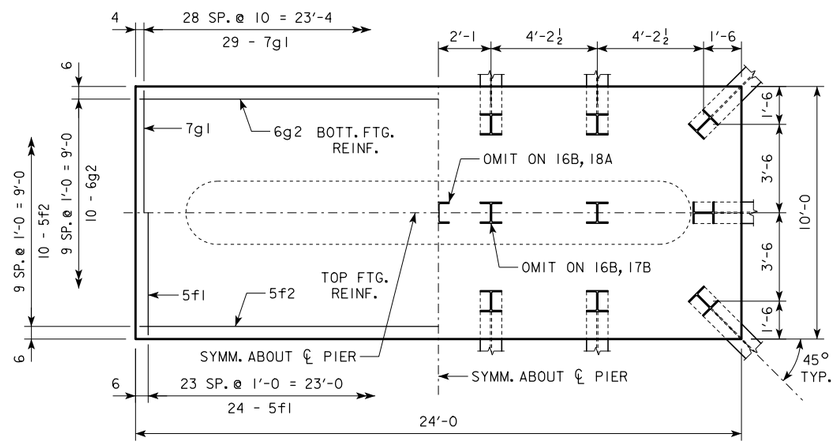

4'-0 x 10'-0 x 24'-0 FOR 16B, 17B & 18A

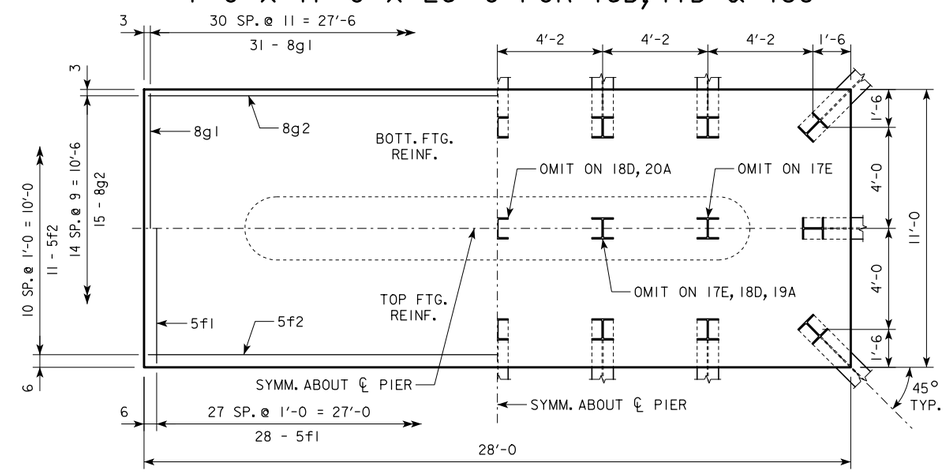

4'-0 x 11'-0 x 28'-0 FOR 17E, 18D, 19A, 20A & 21A

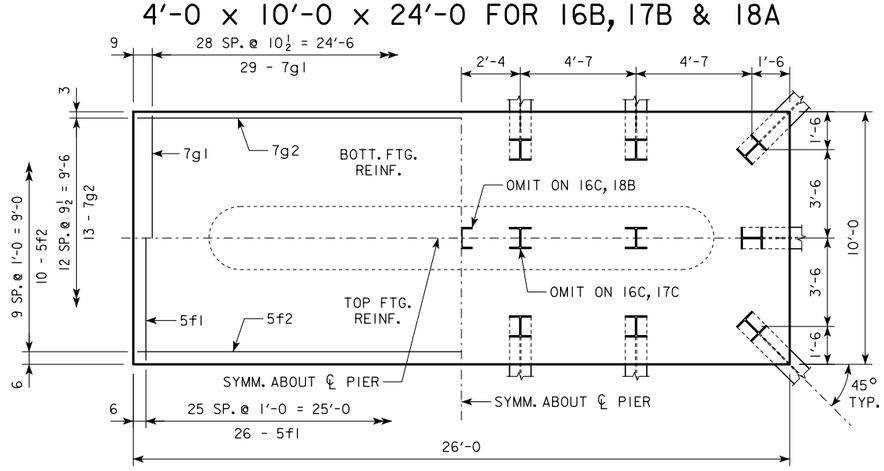

4'-0 x 10'-0 x 26'-0 FOR 16C, 17C & 18B

NOTE:
SEE SHEET RS40-128-14 FOR FOOTING NOTES.

LATEST REVISION DATE

APPROVED BY BRIDGE ENGINEER

IOWADOT Highway Division

STANDARD DESIGN - 40' ROADWAY, 3 SPAN BRIDGES

ROLLED STEEL BEAM BRIDGES

OCTOBER, 2014

TEE PIER-HP10x57 SRL-I STEEL PILE FOOTINGS

10° SKEW - SHEET 2

RS40-129-14

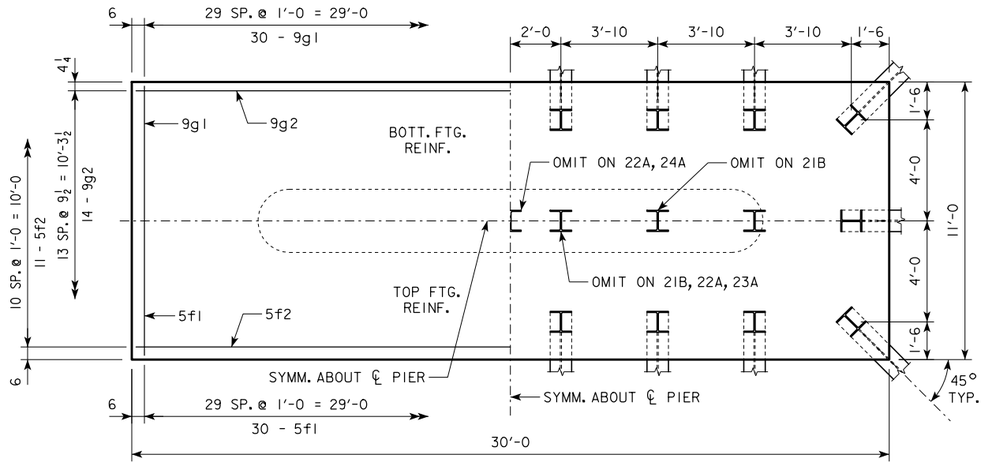

4'-0 x 11'-0 x 30'-0 FOR 21B, 22A, 23A & 24A

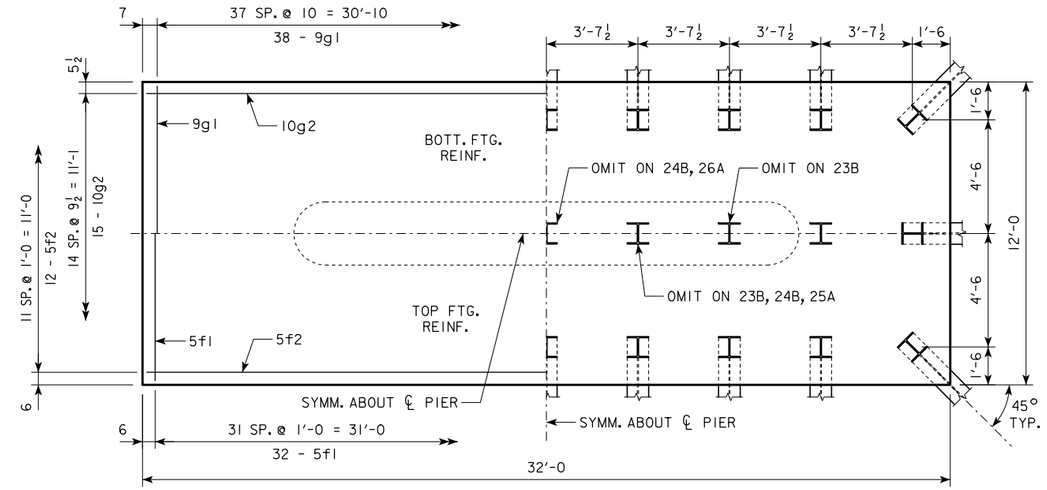

4'-0 x 12'-0 x 32'-0 FOR 23B, 24B, 25A & 26A

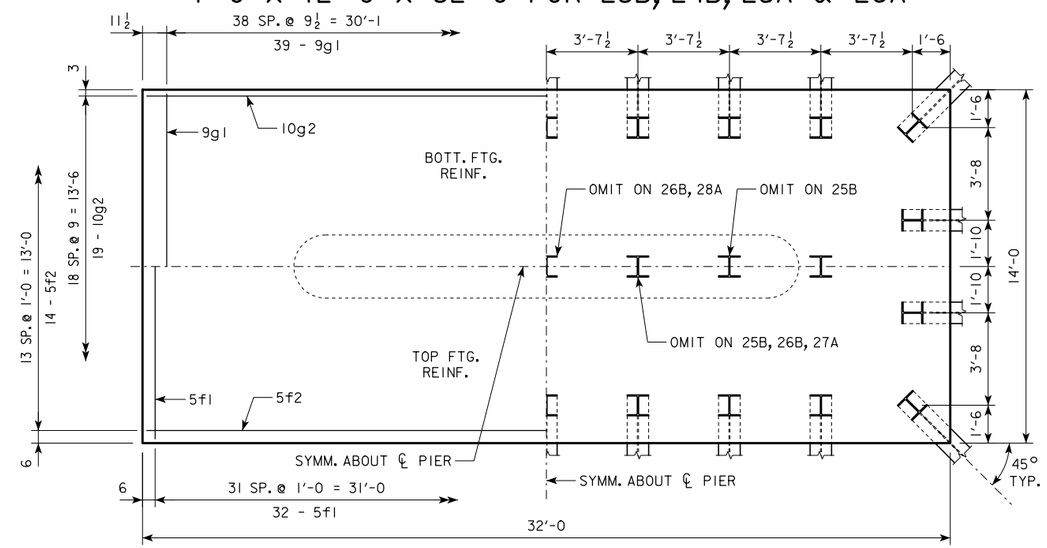

4'-0 x 14'-0 x 32'-0 FOR 25B, 26B, 27A & 28A

NOTE:
SEE SHEET RS40-128-14 FOR FOOTING NOTES.

LATEST REVISION DATE

APPROVED BY BRIDGE ENGINEER

IOWA DOT Highway Division

STANDARD DESIGN - 40' ROADWAY, 3 SPAN BRIDGES

ROLLED STEEL BEAM BRIDGES

OCTOBER, 2014

TEE PIER-HP10x57 SRL-1
STEEL PILE FOOTINGS
10° SKEW - SHEET 3

RS40-130-14

H IN FT.	℄ - ℄ ABUT. BRG.	PILING (HP10x57) NO. & LAYOUT	(1) LRFD Pu, STRENGTH I, DES. LOAD (KIPS)	FOOTING SIZE
16 TO 18	160'-0	10A	209	4' x 8' x 25'
	180'-0	11A	211	
	200'-0	12A	206	
	220'-0	13A	208	
	240'-0	14A	206	
	260'-0	14B	216	4' x 9' x 25'
	280'-0	16A	211	
	300'-0	16D	214	4' x 11' x 27'
	320'-0	16E	215	4' x 12' x 27'
	340'-0	17B	216	
19 TO 21	160'-0	10A	216	4' x 8' x 25'
	180'-0	11A	218	
	200'-0	12A	213	
	220'-0	13A	214	
	240'-0	14A	212	
	260'-0	15A	213	4' x 9' x 25'
	280'-0	16A	217	
	300'-0	16D	219	4' x 11' x 27'
	320'-0	16E	219	4' x 12' x 27'
	340'-0	18A	210	
22 TO 24	160'-0	10B	218	4' x 9' x 25'
	180'-0	12B	202	
	200'-0	12B	214	
	220'-0	13B	216	
	240'-0	14B	213	
	260'-0	15A	218	
	280'-0	16B	217	4' x 10' x 25'
	300'-0	16E	212	4' x 12' x 27'
	320'-0	17B	215	
	340'-0	18A	214	
25 TO 27	160'-0	11C	209	4' x 10' x 25'
	180'-0	12C	204	
	200'-0	12C	216	
	220'-0	13C	217	
	240'-0	14C	214	
	260'-0	15B	218	
	280'-0	16C	218	4' x 11' x 25'
	300'-0	16E	215	4' x 12' x 27'
	320'-0	17B	218	
	340'-0	18A	217	
28 TO 30	160'-0	11C	214	4' x 10' x 25'
	180'-0	12C	209	
	200'-0	13C	206	
	220'-0	14C	204	
	240'-0	14C	218	
	260'-0	15C	216	4' x 11' x 27'
	280'-0	16D	218	
	300'-0	16E	218	4' x 12' x 27'
	320'-0	18A	210	
	340'-0	18A	219	
31 TO 33	160'-0	12D	198	4' x 11' x 25'
	180'-0	12D	211	
	200'-0	13D	208	
	220'-0	14D	205	
	240'-0	14D	219	
	260'-0	15C	219	4' x 11' x 27'
	280'-0	16E	209	4' x 12' x 27'
	300'-0	17B	212	
	320'-0	18A	213	
	340'-0	19A	214	
34 TO 36	160'-0	12E	200	4' x 11' x 27'
	180'-0	12E	212	
	200'-0	13E	208	
	220'-0	14E	205	
	240'-0	14E	219	
	260'-0	15D	214	4' x 12' x 27'
	280'-0	16E	212	
	300'-0	17B	215	
	320'-0	18A	215	
	340'-0	19A	216	

H IN FT.	℄ - ℄ ABUT. BRG.	PILING (HP10x57) NO. & LAYOUT	(1) LRFD Pu, STRENGTH I, DES. LOAD (KIPS)	FOOTING SIZE
37 TO 40	160'-0	12F	203	4' x 12' x 27'
	180'-0	12F	215	
	200'-0	13F	215	
	220'-0	14F	217	
	240'-0	15D	205	
	260'-0	15D	217	
	280'-0	16E	215	
	300'-0	17B	218	
	320'-0	18A	218	
	340'-0	19A	219	

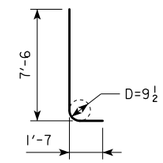

d2

NOTE: D = PIN DIAMETER.
DIMENSIONS ARE OUT TO OUT.

FOOTING SIZE	REINFORCING STEEL (ONE FOOTING) BAR	NO., SIZE & SPACING	LENGTH	WEIGHT (LB.)	TOTAL WEIGHT (LB.)	STRUCTURAL CONCRETE (CY)
4' x 8' x 25'	d2	54 - #9 AS SHOWN	9'-1	1668	3141	29.6
	f1	25 - #5 @ 1'-0	7'-8	200		
	f2	8 - #5 @ 1'-0	24'-8	206		
	g1	27 - #6 @ 0'-11	7'-8	311		
	g2	15 - #7 @ 0'-6	24'-8	756		
4' x 9' x 25'	d2	54 - #9 AS SHOWN	9'-1	1668	3378	33.3
	f1	25 - #5 @ 1'-0	8'-8	226		
	f2	9 - #5 @ 1'-0	24'-8	232		
	g1	28 - #7 @ 0'-10½	8'-8	496		
	g2	15 - #7 @ 0'-7	24'-8	756		
4' x 10' x 25'	d2	54 - #9 AS SHOWN	9'-1	1668	3656	37.0
	f1	25 - #5 @ 1'-0	9'-8	252		
	f2	10 - #5 @ 1'-0	24'-8	257		
	g1	28 - #8 @ 0'-10½	9'-8	723		
	g2	15 - #7 @ 0'-8	24'-8	756		
4' x 11' x 25'	d2	54 - #9 AS SHOWN	9'-1	1668	3998	40.7
	f1	25 - #5 @ 1'-0	10'-8	278		
	f2	11 - #5 @ 1'-0	24'-8	283		
	g1	27 - #9 @ 0'-11	10'-8	979		
	g2	12 - #8 @ 0'-11	24'-8	790		
4' x 11' x 27'	d2	54 - #9 AS SHOWN	9'-1	1668	4511	44.0
	f1	27 - #5 @ 1'-0	10'-8	300		
	f2	11 - #5 @ 1'-0	26'-8	306		
	g1	34 - #8 @ 0'-9½	10'-8	968		
	g2	14 - #9 @ 0'-9½	26'-8	1269		
4' x 12' x 27'	d2	54 - #9 AS SHOWN	9'-1	1668	5000	48.0
	f1	27 - #5 @ 1'-0	11'-8	329		
	f2	12 - #5 @ 1'-0	26'-8	334		
	g1	33 - #9 @ 0'-9½	11'-8	1309		
	g2	15 - #9 @ 0'-9½	26'-8	1360		

(1) NOTE: PU, STRENGTH I DESIGN LOAD (KIPS) IS NOT THE VALUE USED IN THE FIELD FOR DRIVING PILES.

NOTE: THE REINFORCING STEEL QUANTITY IS TO BE INCLUDED ON THE SUMMARY QUANTITIES SHEET IN THE PLAN.

NOTE: THE CONCRETE QUANTITY IS TO BE INCLUDED ON THE SUMMARY QUANTITIES SHEET IN THE PLAN.

NOTE: THE PILE TYPE IS TO BE INCLUDED ON THE SUMMARY QUANTITIES SHEET IN THE PLAN.

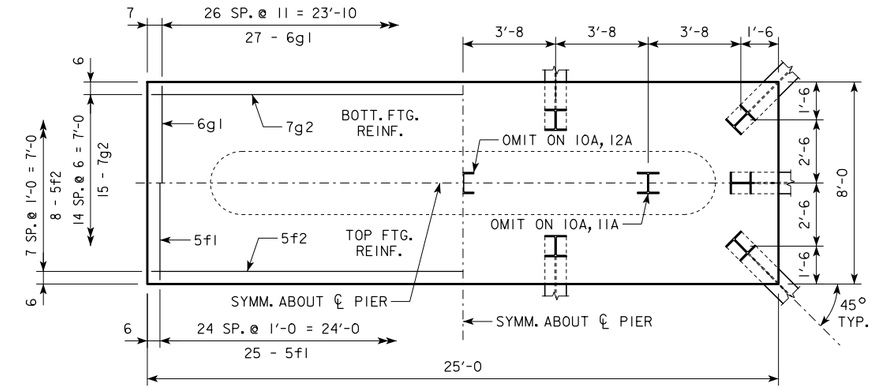

4'-0 x 8'-0 x 25'-0 FOR 10A, 11A & 12A

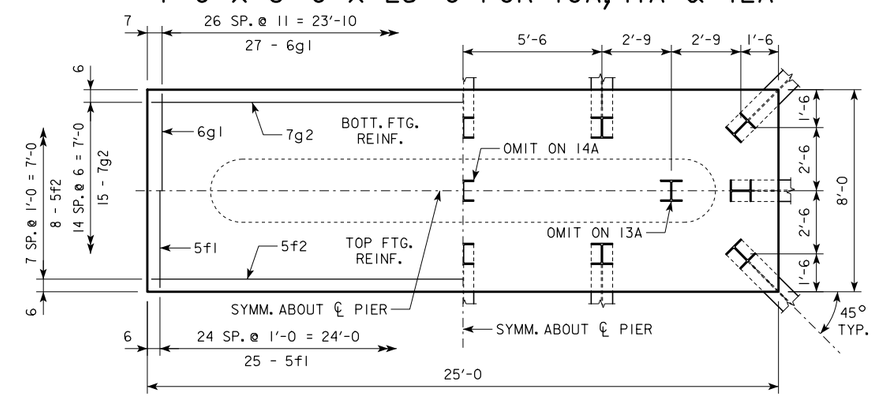

4'-0 x 8'-0 x 25'-0 FOR 13A & 14A

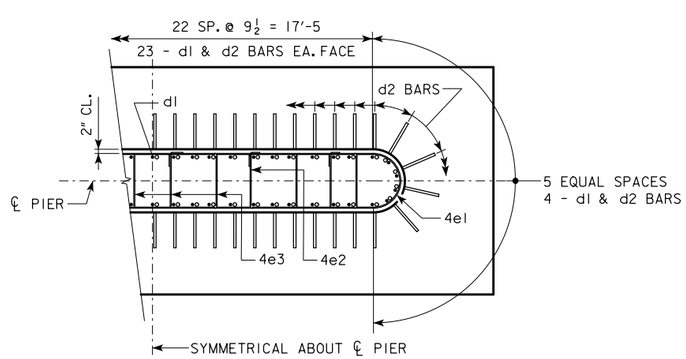

d2 BAR LAYOUT
(SEE SECTION A-A ON SHEET RS40-126-14.)

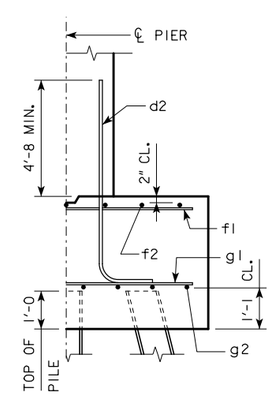

TYPICAL SECTION

FOOTING NOTES:

THESE FOOTINGS ARE DESIGNED AND DETAILED TO BE USED WITH THE CAP AND COLUMN DETAILS OF THE TEE PIERS AS SHOWN ON SHEET RS40-126-14.

BATTER PILES IN EXTERIOR ROWS 1:4 IN THE DIRECTION SHOWN.

STEEL PILING USED AS POINT BEARING SHALL HAVE A MINIMUM DISTANCE OF APPROXIMATELY 10 FEET FROM BOTTOM OF FOOTING TO TOP OF BEARING ROCK. THE PILE LAYOUTS ARE SUCH THAT THE DISTANCE CENTER TO CENTER OF ADJACENT PILING SHALL NOT EXCEED 8'-0.

PIER PILES SHALL BE DRIVEN TO VALUES SHOWN IN DESIGN PLANS.

LATEST REVISION DATE

APPROVED BY BRIDGE ENGINEER

IOWA DOT Highway Division

STANDARD DESIGN - 40' ROADWAY, 3 SPAN BRIDGES

ROLLED STEEL BEAM BRIDGES

OCTOBER, 2014

TEE PIER-HP10x57 SRL-2
STEEL PILE FOOTINGS
10° SKEW - SHEET 1

RS40-131-14

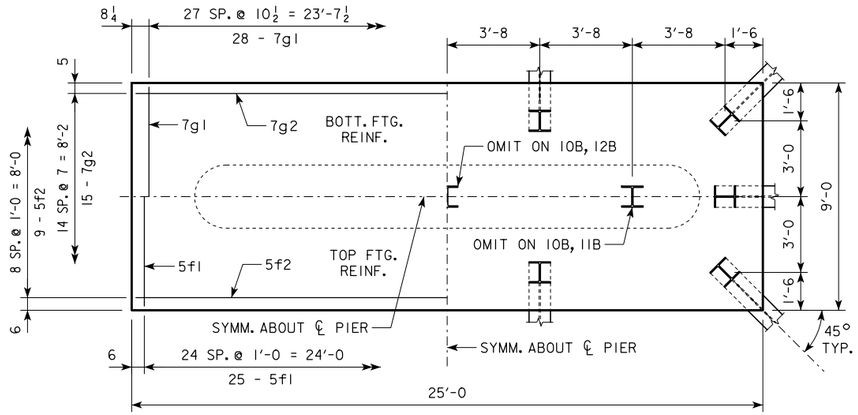

4'-0 x 9'-0 x 25'-0 FOR 10B, 11B & 12B

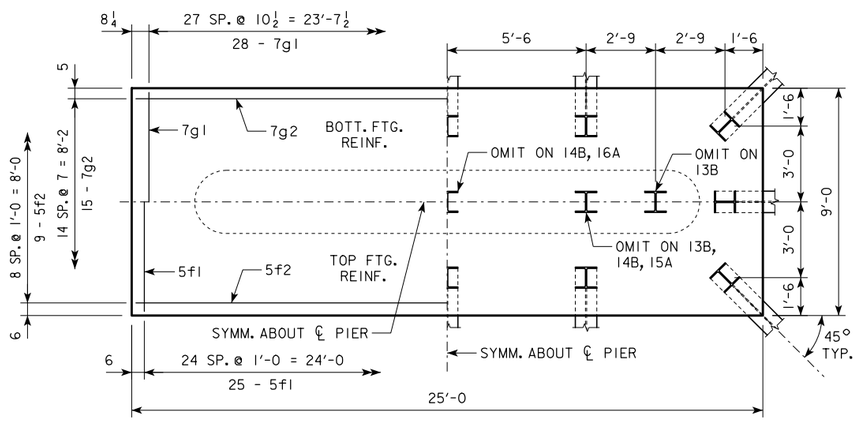

4'-0 x 9'-0 x 25'-0 FOR 13B, 14B, 15A & 16A

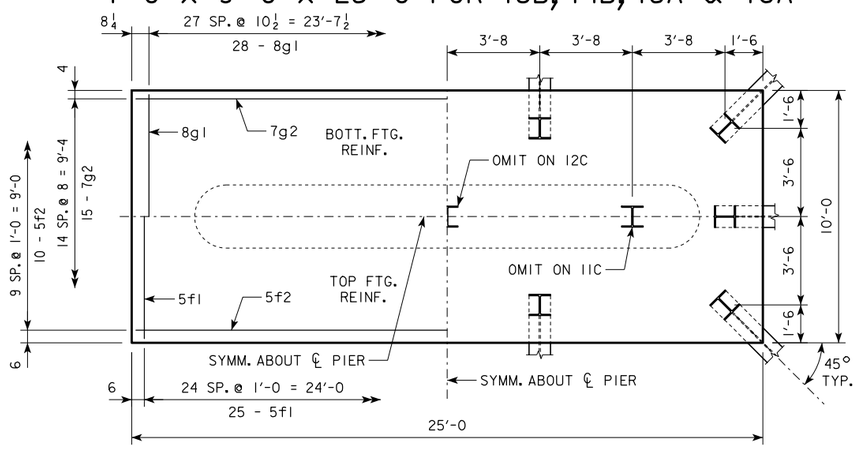

4'-0 x 10'-0 x 25'-0 FOR 11C & 12C

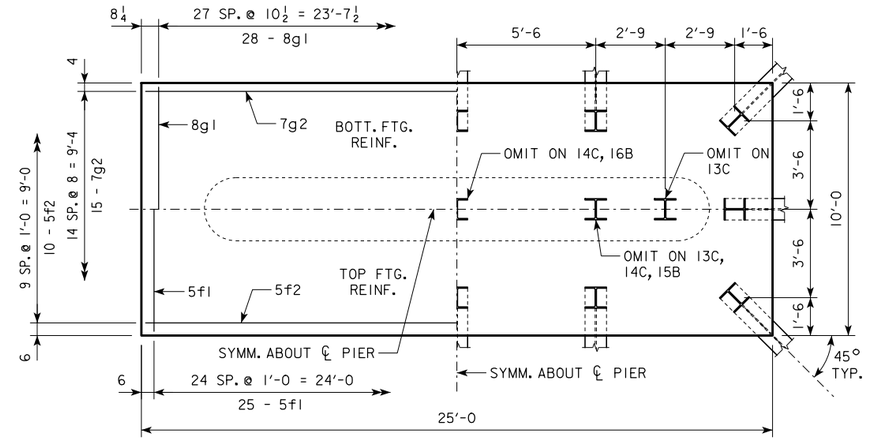

4'-0 x 10'-0 x 25'-0 FOR 13C, 14C, 15B & 16B

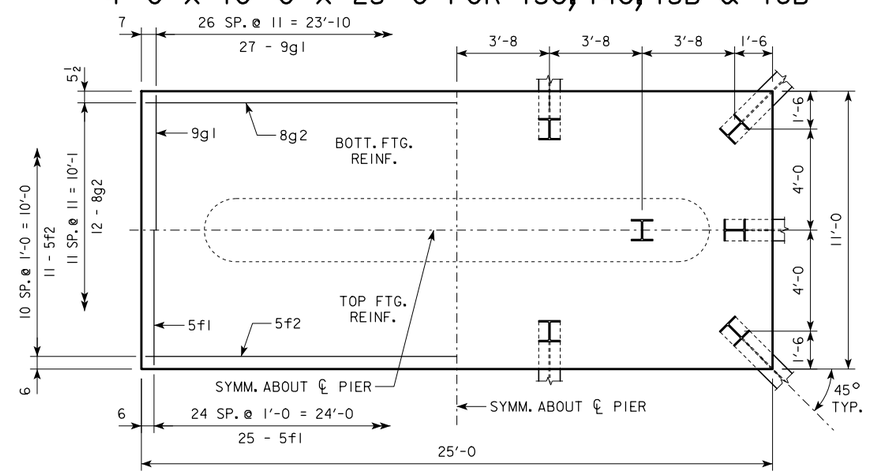

4'-0 x 11'-0 x 25'-0 FOR 12D

NOTE:
SEE SHEET RS40-131-14 FOR FOOTING NOTES.

LATEST REVISION DATE

APPROVED BY BRIDGE ENGINEER

IOWA DOT Highway Division

STANDARD DESIGN - 40' ROADWAY, 3 SPAN BRIDGES

ROLLED STEEL BEAM BRIDGES

OCTOBER, 2014

TEE PIER-HP10x57 SRL-2
STEEL PILE FOOTINGS
10° SKEW - SHEET 2

RS40-132-14

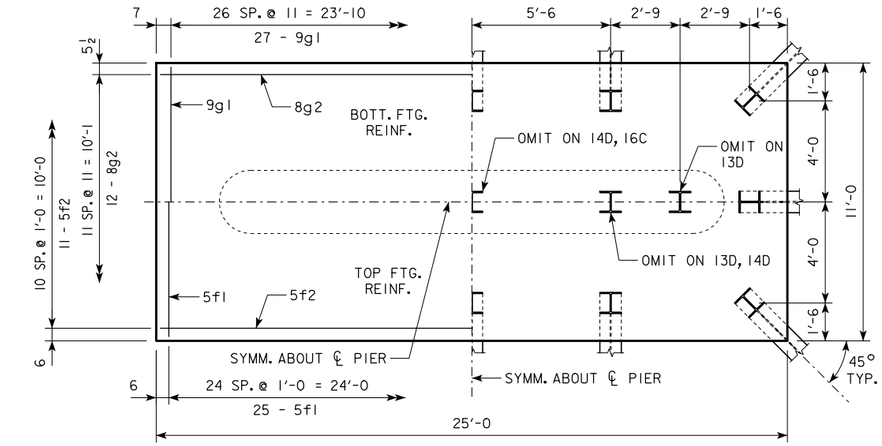

4'-0 x 11'-0 x 25'-0 FOR 13D, 14D & 16C

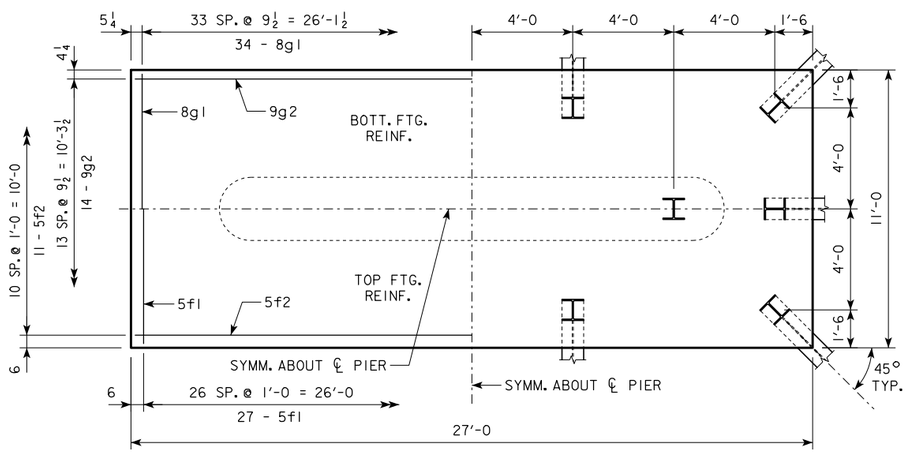

4'-0 x 11'-0 x 27'-0 FOR 12E

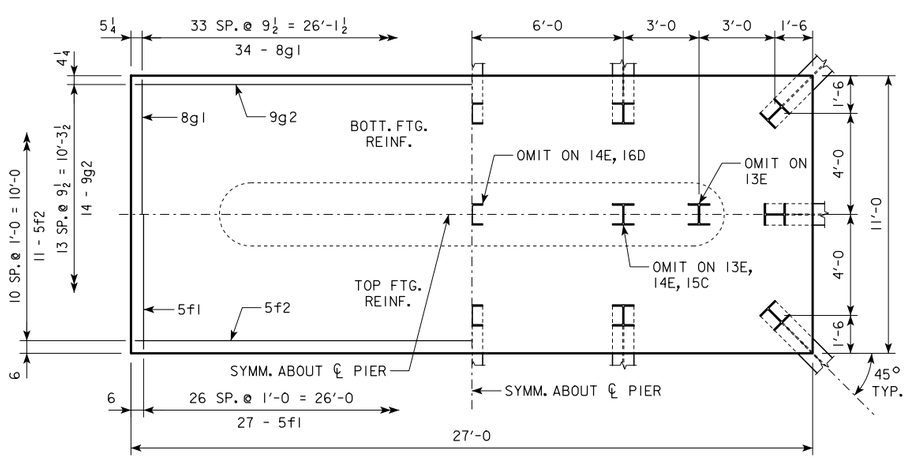

4'-0 x 11'-0 x 27'-0 FOR 13E, 14E, 15C & 16D

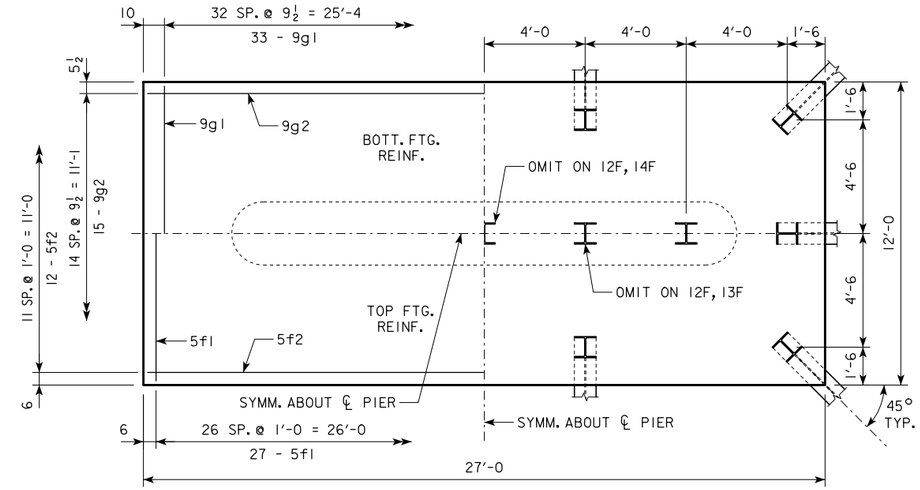

4'-0 x 12'-0 x 27'-0 FOR 12F, 13F & 14F

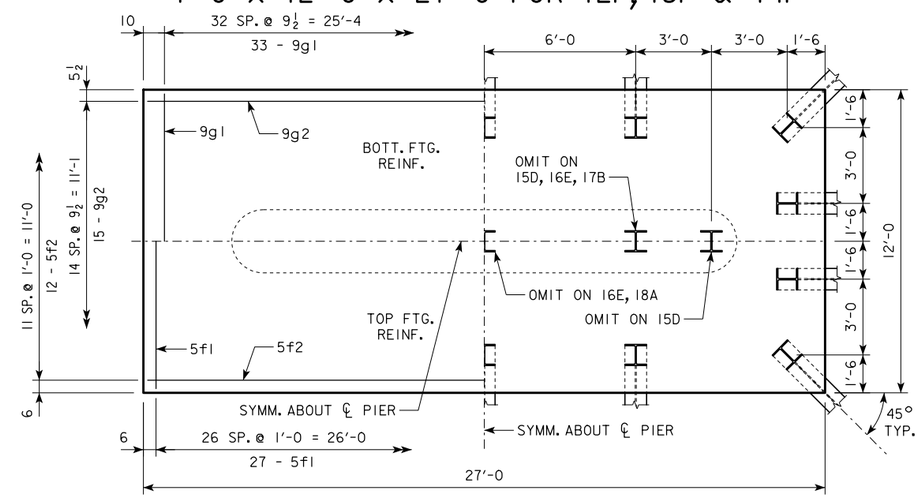

4'-0 x 12'-0 x 27'-0 FOR 15D, 16E, 17B, 18A & 19A

NOTE:
SEE SHEET RS40-131-14 FOR FOOTING NOTES.

LATEST REVISION DATE

APPROVED BY BRIDGE ENGINEER

IOWADOT Highway Division

STANDARD DESIGN - 40' ROADWAY, 3 SPAN BRIDGES

ROLLED STEEL BEAM BRIDGES

OCTOBER, 2014

TEE PIER-HP10x57 SRL-2
STEEL PILE FOOTINGS
10° SKEW - SHEET 3

RS40-133-14

H IN FT.	℄ - ℄ ABUT. BRG.	FOOTING SIZE
16 TO 18	160′-0	4′ x 8′ x 26′
	180′-0	
	200′-0	4′ x 9′ x 26′
	220′-0	
	240′-0	4′ x 9′ x 28′
	260′-0	4′ x 10′ x 28′
	280′-0	
	300′-0	4′ x 10′ x 30′
	320′-0	4′ x 11′ x 30′
	340′-0	
19 TO 21	160′-0	4′ x 8′ x 26′
	180′-0	4′ x 9′ x 26′
	200′-0	
	220′-0	4′ x 9′ x 28′
	240′-0	
	260′-0	4′ x 10′ x 28′
	280′-0	4′ x 10′ x 30′
	300′-0	
	320′-0	4′ x 11′ x 30′
	340′-0	
22 TO 24	160′-0	4′ x 8′ x 26′
	180′-0	4′ x 9′ x 26′
	200′-0	
	220′-0	4′ x 9′ x 28′
	240′-0	4′ x 10′ x 28′
	260′-0	
	280′-0	4′ x 10′ x 30′
	300′-0	4′ x 11′ x 30′
	320′-0	
	340′-0	
25 TO 27	160′-0	4′ x 9′ x 26′
	180′-0	
	200′-0	
	220′-0	4′ x 9′ x 28′
	240′-0	4′ x 10′ x 28′
	260′-0	
	280′-0	4′ x 10′ x 30′
	300′-0	4′ x 11′ x 30′
	320′-0	
	340′-0	4′ x 11′ x 32′
28 TO 30	160′-0	4′ x 9′ x 26′
	180′-0	
	200′-0	4′ x 9′ x 28′
	220′-0	4′ x 10′ x 28′
	240′-0	
	260′-0	4′ x 10′ x 30′
	280′-0	
	300′-0	4′ x 11′ x 30′
	320′-0	
	340′-0	4′ x 11′ x 32′
31 TO 33	160′-0	4′ x 9′ x 26′
	180′-0	
	200′-0	4′ x 9′ x 28′
	220′-0	4′ x 10′ x 28′
	240′-0	
	260′-0	4′ x 10′ x 30′
	280′-0	4′ x 11′ x 30′
	300′-0	
	320′-0	
	340′-0	4′ x 11′ x 32′
34 TO 36	160′-0	4′ x 9′ x 26′
	180′-0	4′ x 9′ x 28′
	200′-0	
	220′-0	4′ x 10′ x 28′
	240′-0	
	260′-0	4′ x 10′ x 30′
	280′-0	4′ x 11′ x 30′
	300′-0	
	320′-0	4′ x 11′ x 32′
	340′-0	

H IN FT.	℄ - ℄ ABUT. BRG.	FOOTING SIZE
37 TO 40	160′-0	4′ x 9′ x 26′
	180′-0	4′ x 9′ x 28′
	200′-0	4′ x 10′ x 28′
	220′-0	
	240′-0	
	260′-0	4′ x 10′ x 30′
	280′-0	4′ x 11′ x 30′
	300′-0	
	320′-0	4′ x 11′ x 32′
	340′-0	

FOOTING SIZE	REINFORCING STEEL (ONE FOOTING)					STRUCTURAL CONCRETE (CY)
	BAR	NO., SIZE & SPACING	LENGTH	WEIGHT (LB.)	TOTAL WEIGHT (LB.)	
4′ x 8′ x 26′	d2	54 - #9 AS SHOWN	9′-11	1821	2962	30.8
	f1	26 - #5 @ 1′-0	7′-8	208		
	f2	8 - #5 @ 1′-0	25′-8	214		
	g1	26 - #6 @ 1′-0	7′-8	299		
	g2	8 - #7 @ 1′-0	25′-8	420		
4′ x 9′ x 26′	d2	54 - #9 AS SHOWN	9′-11	1821	3160	34.7
	f1	26 - #5 @ 1′-0	8′-8	235		
	f2	9 - #5 @ 1′-0	25′-8	241		
	g1	30 - #6 @ 0′-10½	8′-8	391		
	g2	9 - #7 @ 1′-0	25′-8	472		
4′ x 9′ x 28′	d2	54 - #9 AS SHOWN	9′-11	1821	3577	37.3
	f1	28 - #5 @ 1′-0	8′-8	253		
	f2	9 - #5 @ 1′-0	27′-8	260		
	g1	33 - #6 @ 0′-10	8′-8	430		
	g2	11 - #8 @ 0′-10	27′-8	813		
4′ x 10′ x 28′	d2	54 - #9 AS SHOWN	9′-11	1821	3950	41.5
	f1	28 - #5 @ 1′-0	9′-8	282		
	f2	10 - #5 @ 1′-0	27′-8	289		
	g1	34 - #7 @ 0′-10	9′-8	672		
	g2	12 - #8 @ 0′-10	27′-8	886		
4′ x 10′ x 30′	d2	54 - #9 AS SHOWN	9′-11	1821	4575	44.4
	f1	30 - #5 @ 1′-0	9′-8	302		
	f2	10 - #5 @ 1′-0	29′-8	309		
	g1	37 - #7 @ 0′-9½	9′-8	731		
	g2	14 - #9 @ 0′-8½	29′-8	1412		
4′ x 11′ x 30′	d2	54 - #9 AS SHOWN	9′-11	1821	5062	48.9
	f1	30 - #5 @ 1′-0	10′-8	334		
	f2	11 - #5 @ 1′-0	29′-8	340		
	g1	37 - #8 @ 0′-9½	10′-8	1054		
	g2	15 - #9 @ 0′-9	29′-8	1513		
4′ x 11′ x 32′	d2	54 - #9 AS SHOWN	9′-11	1821	5831	52.1
	f1	32 - #5 @ 1′-0	10′-8	356		
	f2	11 - #5 @ 1′-0	31′-8	363		
	g1	39 - #8 @ 0′-9½	10′-8	1111		
	g2	16 - #10 @ 0′-8	31′-8	2180		

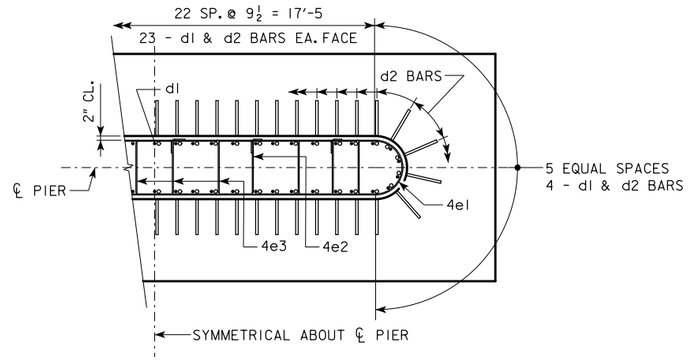

d2 BAR LAYOUT
(SEE SECTION A-A ON SHEET RS40-126-14.)

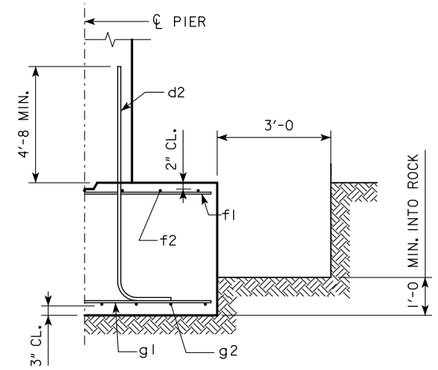

TYPICAL SECTION

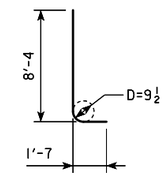

d2

NOTE: D = PIN DIAMETER.
DIMENSIONS ARE OUT TO OUT.

NOTE: THE REINFORCING STEEL QUANTITY IS TO BE INCLUDED ON THE SUMMARY QUANTITIES SHEET IN THE PLAN.

NOTE: THE CONCRETE QUANTITY IS TO BE INCLUDED ON THE SUMMARY QUANTITIES SHEET IN THE PLAN.

FOOTING NOTES:

THESE SPREAD FOOTINGS ARE DESIGNED AND DETAILED TO BE USED WITH THE CAP AND COLUMN DETAILS OF THE TEE PIERS AS SHOWN ON SHEET RS40-126-14.

THESE SPREAD FOOTINGS SHALL EXTEND AT LEAST 12 INCHES INTO SUITABLE FOUNDATION ROCK AND THE LAST 12 INCHES OF ROCK EXCAVATION SHALL BE TO NEAT LINES OF MASONRY. THE FOUNDATION ROCK SHALL HAVE A MINIMUM LRFD NOMINAL BEARING RESISTANCE OF 30 KIPS PER SQUARE FOOT (ALLOWABLE BEARING VALUE OF AT LEAST 10 KIPS PER SQUARE FOOT).

LATEST REVISION DATE

APPROVED BY BRIDGE ENGINEER

IOWA DOT Highway Division

STANDARD DESIGN - 40′ ROADWAY, 3 SPAN BRIDGES

ROLLED STEEL BEAM BRIDGES

OCTOBER, 2014

TEE PIER - SPREAD FOOTINGS
10° SKEW - SHEET 1

RS40-134-14

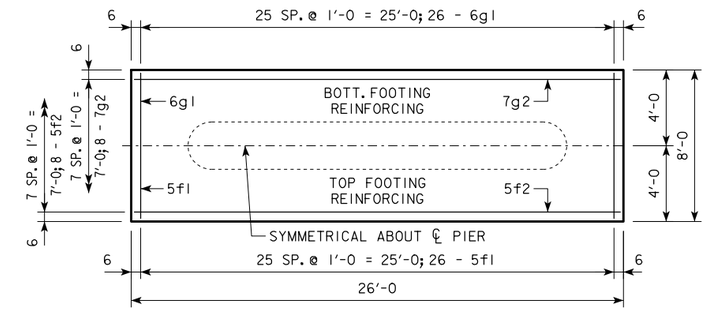

4'-0 x 8'-0 x 26'-0

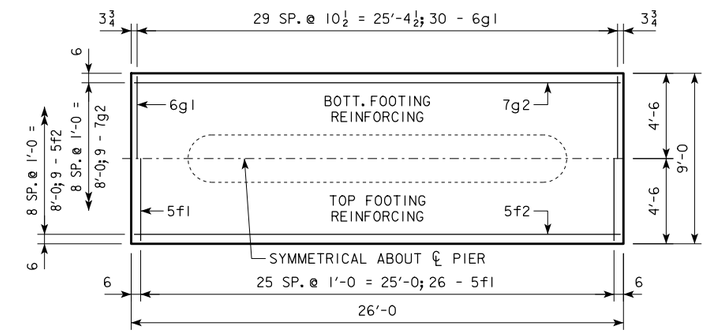

4'-0 x 9'-0 x 26'-0

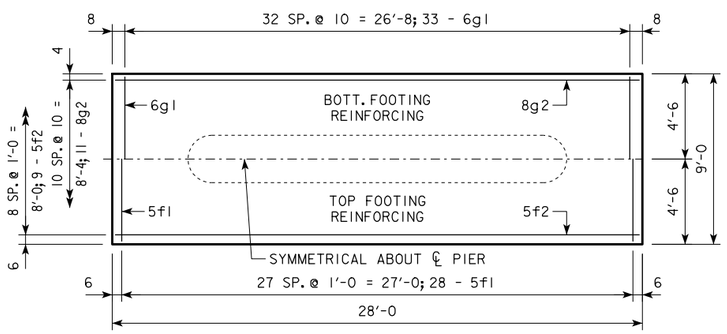

4'-0 x 9'-0 x 28'-0

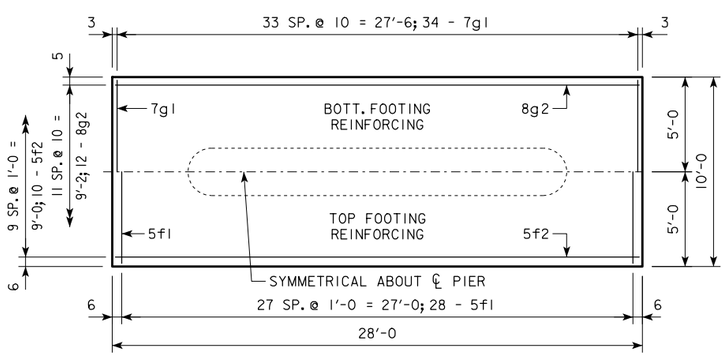

4'-0 x 10'-0 x 28'-0

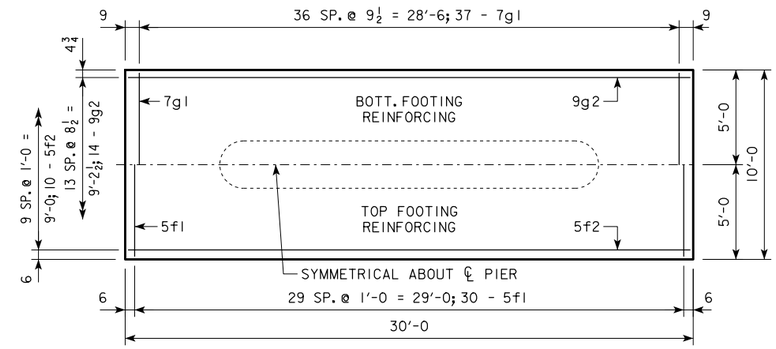

4'-0 x 10'-0 x 30'-0

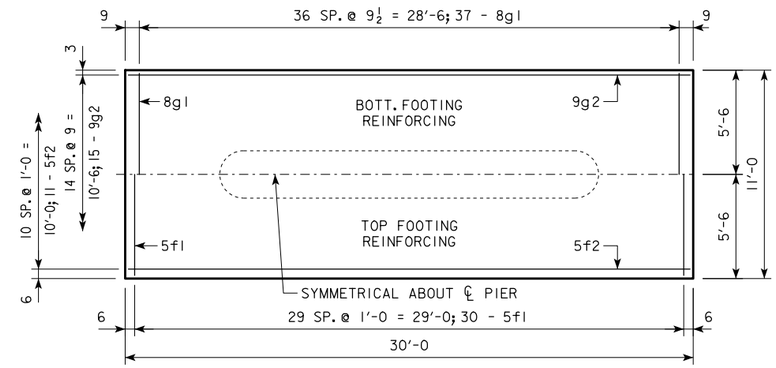

4'-0 x 11'-0 x 30'-0

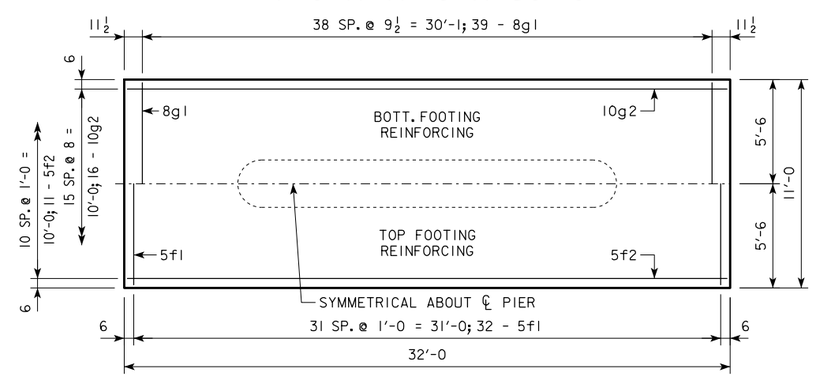

4'-0 x 11'-0 x 32'-0

NOTE:
SEE SHEET RS40-134-14 FOR FOOTING NOTES.

LATEST REVISION DATE

APPROVED BY BRIDGE ENGINEER

IOWADOT Highway Division

STANDARD DESIGN - 40' ROADWAY, 3 SPAN BRIDGES

ROLLED STEEL BEAM BRIDGES

OCTOBER, 2014

TEE PIER - SPREAD FOOTINGS

10° SKEW - SHEET 2

RS40-135-14

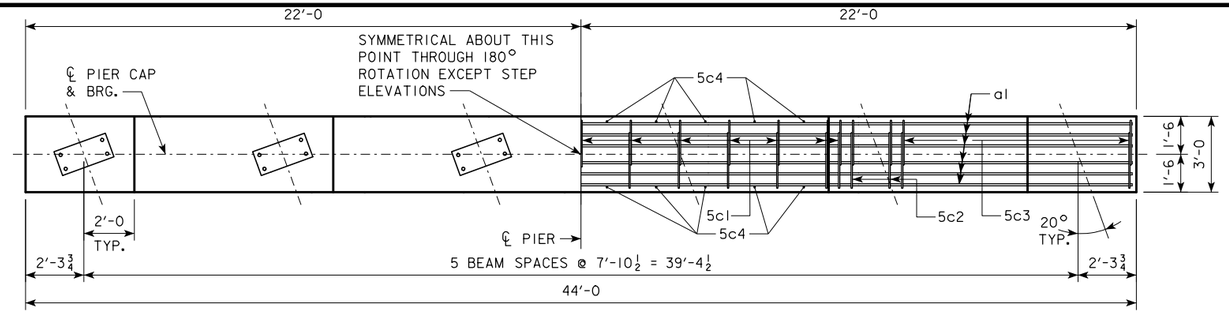

CAP PLAN

NOTE:
ANCHOR BOLTS REQUIRED FOR FIXED PIER BEARINGS ONLY. FOR BOLT AND BEARING SIZES, SEE RS40-093-14, RS40-094-14 OR RS40-095-14.

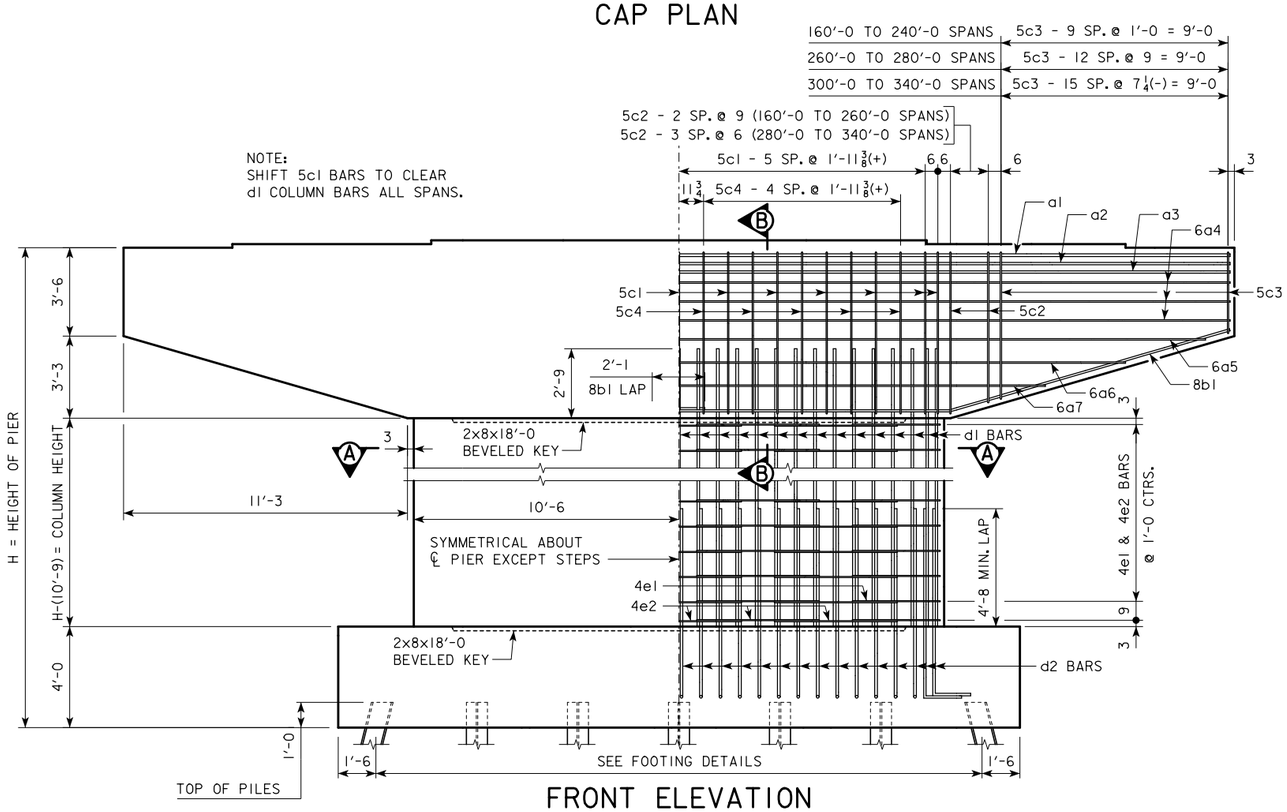

FRONT ELEVATION

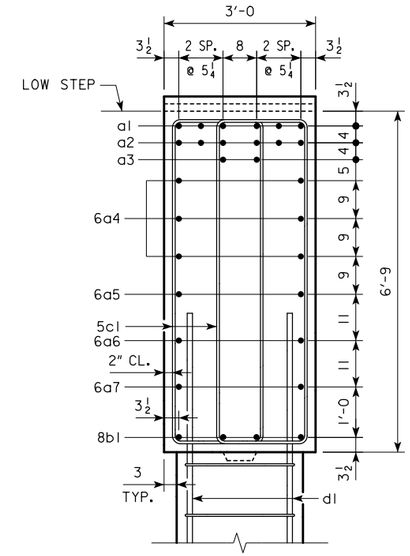

SECTION B-B

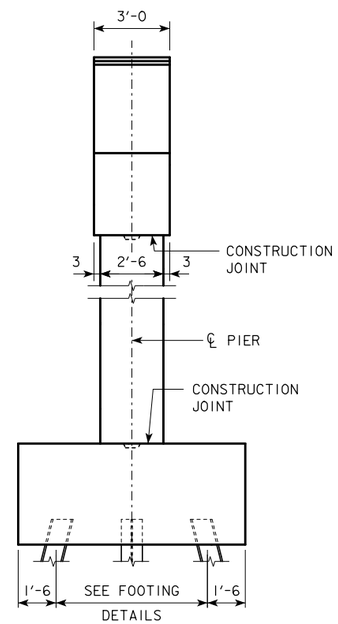

END ELEVATION

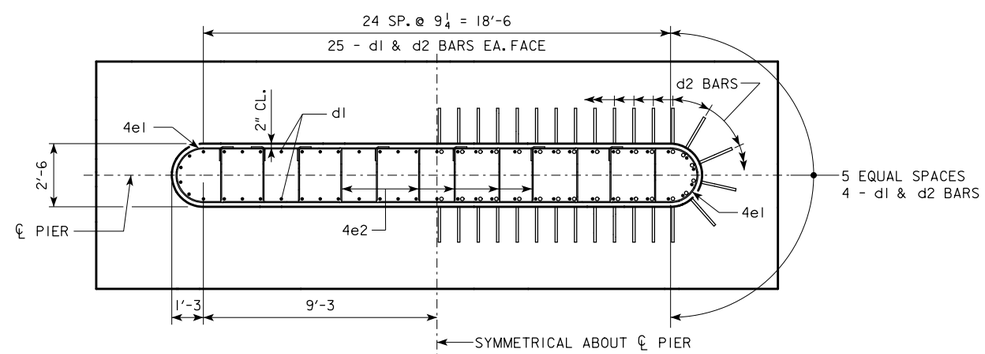

SECTION A-A

LATEST REVISION DATE

APPROVED BY BRIDGE ENGINEER

IOWA DOT Highway Division

STANDARD DESIGN - 40' ROADWAY, 3 SPAN BRIDGES

ROLLED STEEL BEAM BRIDGES

OCTOBER, 2014

TEE PIER CAP & COLUMN DETAILS

20° SKEW

RS40-136-14

CAP

REINFORCING STEEL																																				
℄ - ℄ ABUT. BEARINGS			160'-0			180'-0			200'-0			220'-0			240'-0			260'-0			280'-0			300'-0			320'-0			340'-0		
BAR	LENGTH	SHAPE	NO.	SIZE	WEIGHT	NO.	SIZE	WEIGHT	NO.	SIZE	WEIGHT	NO.	SIZE	WEIGHT	NO.	SIZE	WEIGHT	NO.	SIZE	WEIGHT	NO.	SIZE	WEIGHT	NO.	SIZE	WEIGHT	NO.	SIZE	WEIGHT	NO.	SIZE	WEIGHT
a1	43'-8		6	9	891	6	9	891	6	9	891	6	10	1127	6	10	1127	6	10	1127	6	11	1392	6	11	1392	6	11	1392	6	11	1392
a2	43'-8		6	8	700	6	8	700	6	9	891	6	9	891	6	10	1127	6	10	1127	6	10	1127	6	11	1392	6	11	1392	6	11	1392
a3	43'-8		--	--	--	--	--	--	--	--	--	--	--	--	--	--	--	--	--	--	--	--	--	--	--	--	2	6	131	2	9	297
6a4	43'-8		6	6	394	6	6	394	6	6	394	6	6	394	6	6	394	6	6	394	6	6	394	6	6	394	6	6	394	6	6	394
6a5	41'-8		2	6	125	2	6	125	2	6	125	2	6	125	2	6	125	2	6	125	2	6	125	2	6	125	2	6	125	2	6	125
6a6	35'-4		2	6	106	2	6	106	2	6	106	2	6	106	2	6	106	2	6	106	2	6	106	2	6	106	2	6	106	2	6	106
6a7	29'-0		2	6	87	2	6	87	2	6	87	2	6	87	2	6	87	2	6	87	2	6	87	2	6	87	2	6	87	2	6	87
8b1	23'-4		8	8	498	8	8	498	8	8	498	8	8	498	8	8	498	8	8	498	8	8	498	8	8	498	8	8	498	8	8	498
5c1	17'-5		26	5	472	26	5	472	26	5	472	26	5	472	26	5	472	26	5	472	26	5	472	26	5	472	26	5	472	26	5	472
5c2	VARIES		12	5	213	12	5	213	12	5	213	12	5	213	12	5	213	12	5	213	16	5	284	16	5	284	16	5	284	16	5	284
5c3	VARIES		40	5	570	40	5	570	40	5	570	40	5	570	40	5	570	52	5	741	52	5	741	64	5	912	64	5	912	64	5	912
5c4	6'-11		20	5	144	20	5	144	20	5	144	20	5	144	20	5	144	20	5	144	20	5	144	20	5	144	20	5	144	20	5	144
① TOTAL (LB.)			4200			4200			4391			4627			4863			5034			5370			5806			5937			6103		
STRUCTURAL CONCRETE (CY)			29.9			29.9			29.9			29.9			29.9			29.9			29.9			29.9			29.9			29.9		

BENT BAR DETAILS

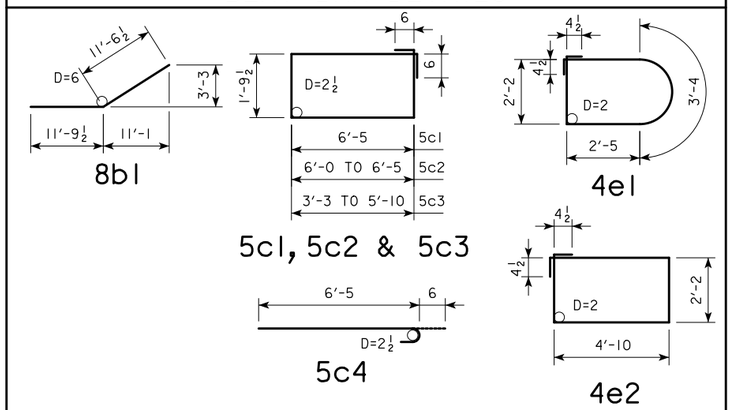

NOTE: ALL DIMENSIONS ARE OUT TO OUT.
D = PIN DIAMETER.

NOTE: THE REINFORCING STEEL QUANTITY IS TO BE INCLUDED ON THE SUMMARY QUANTITIES SHEET IN THE PLAN.

NOTE: THE CONCRETE QUANTITY IS TO BE INCLUDED ON THE SUMMARY QUANTITIES SHEET IN THE PLAN.

NOTE: THE PILE TYPE IS TO BE INCLUDED ON THE SUMMARY QUANTITIES SHEET IN THE PLAN.

COLUMN

H IN FEET	COLUMN HEIGHT	STRUCTURAL CONCRETE (CY)	REINFORCING STEEL												TOTAL WEIGHT (LB.)
			d1 BAR				4e1 BAR				4e2 BAR				
			NO.	SIZE	LENGTH	WEIGHT	NO.	SIZE	LENGTH	WEIGHT	NO.	SIZE	LENGTH	WEIGHT	
16	5'-3	9.9	58	9	8'-0	1578	12	4	11'-1	89	30	4	14'-9	296	1963
17	6'-3	11.8	58	9	9'-0	1775	14	4	11'-1	104	35	4	14'-9	345	2224
18	7'-3	13.7	58	9	10'-0	1972	16	4	11'-1	118	40	4	14'-9	394	2484
19	8'-3	15.6	58	9	11'-0	2169	18	4	11'-1	133	45	4	14'-9	443	2745
20	9'-3	17.5	58	9	12'-0	2366	20	4	11'-1	148	50	4	14'-9	493	3007
21	10'-3	19.4	58	9	13'-0	2564	22	4	11'-1	163	55	4	14'-9	542	3269
22	11'-3	21.3	58	9	14'-0	2761	24	4	11'-1	178	60	4	14'-9	591	3530
23	12'-3	23.2	58	9	15'-0	2958	26	4	11'-1	192	65	4	14'-9	640	3790
24	13'-3	25.1	58	9	16'-0	3155	28	4	11'-1	207	70	4	14'-9	690	4052
25	14'-3	27.0	58	9	17'-0	3352	30	4	11'-1	222	75	4	14'-9	739	4313
26	15'-3	28.9	58	9	18'-0	3550	32	4	11'-1	237	80	4	14'-9	788	4575
27	16'-3	30.8	58	9	19'-0	3747	34	4	11'-1	252	85	4	14'-9	838	4837
28	17'-3	32.7	58	9	20'-0	3944	36	4	11'-1	267	90	4	14'-9	887	5098
29	18'-3	34.6	58	9	21'-0	4141	38	4	11'-1	281	95	4	14'-9	936	5358
30	19'-3	36.5	58	9	22'-0	4338	40	4	11'-1	296	100	4	14'-9	985	5619
31	20'-3	38.4	58	9	23'-0	4536	42	4	11'-1	311	105	4	14'-9	1035	5882
32	21'-3	40.3	58	9	24'-0	4733	44	4	11'-1	326	110	4	14'-9	1084	6143
33	22'-3	42.2	58	9	25'-0	4930	46	4	11'-1	341	115	4	14'-9	1133	6404
34	23'-3	44.1	58	9	26'-0	5127	48	4	11'-1	355	120	4	14'-9	1182	6664
35	24'-3	45.9	58	9	27'-0	5324	50	4	11'-1	370	125	4	14'-9	1232	6926
36	25'-3	47.8	58	9	28'-0	5522	52	4	11'-1	385	130	4	14'-9	1281	7188
37	26'-3	49.7	58	9	29'-0	5719	54	4	11'-1	400	135	4	14'-9	1330	7449
38	27'-3	51.6	58	9	30'-0	5916	56	4	11'-1	415	140	4	14'-9	1379	7710
39	28'-3	53.5	58	9	31'-0	6113	58	4	11'-1	429	145	4	14'-9	1429	7971
40	29'-3	55.4	58	9	32'-0	6310	60	4	11'-1	444	150	4	14'-9	1478	8232

PIER NOTES:

SEE "TEE PIER NOTES" ON RS40-003-14 FOR NOTES REGARDING APPLICATION OF THESE PIER STANDARDS.

MINIMUM CLEAR DISTANCE FROM FACE OF CONCRETE TO NEAR REINFORCING BAR SHALL BE 2 INCHES UNLESS OTHERWISE NOTED OR SHOWN.

① SEE SHEET RS40-167-14 FOR STEP REINFORCING STEEL QUANTITIES AND DETAILS.

LATEST REVISION DATE

APPROVED BY BRIDGE ENGINEER

IOWA DOT Highway Division

STANDARD DESIGN - 40' ROADWAY, 3 SPAN BRIDGES

ROLLED STEEL BEAM BRIDGES

OCTOBER, 2014

TEE PIER CAP & COLUMN DETAILS
20° SKEW

RS40-137-14

H IN FT.	℄ - ℄ ABUT. BRG.	PILING (HP10x57) NO. & LAYOUT		FOOTING SIZE
16 TO 18	160'-0	17A	134	4' x 8' x 26'
	180'-0	17A	144	
	200'-0	18A	143	
	220'-0	20A	145	
	240'-0	21C	146	4' x 11' x 26'
	260'-0	21F	142	4' x 14' x 30'
	280'-0	22A	146	
	300'-0	24A	138	4' x 14' x 32'
	320'-0	24A	146	
	340'-0	26A	143	
19 TO 21	160'-0	17A	139	4' x 8' x 26'
	180'-0	18A	139	
	200'-0	19A	143	
	220'-0	21A	146	
	240'-0	21D	144	4' x 11' x 30'
	260'-0	21F	145	4' x 14' x 30'
	280'-0	23A	145	
	300'-0	24A	141	4' x 14' x 32'
	320'-0	25A	144	
	340'-0	26A	146	
22 TO 24	160'-0	17A	143	4' x 8' x 26'
	180'-0	18A	143	
	200'-0	20A	142	
	220'-0	21B	146	4' x 9' x 26'
	240'-0	21E	143	4' x 12' x 30'
	260'-0	22A	143	4' x 14' x 30'
	280'-0	24A	136	4' x 14' x 32'
	300'-0	24A	143	
	320'-0	26A	142	
	340'-0	27A	144	
25 TO 27	160'-0	17B	144	4' x 9' x 26'
	180'-0	18B	144	
	200'-0	20B	143	
	220'-0	21C	146	4' x 11' x 26'
	240'-0	21E	145	4' x 12' x 30'
	260'-0	22A	145	4' x 14' x 30'
	280'-0	24A	138	4' x 14' x 32'
	300'-0	24A	146	
	320'-0	26A	144	
	340'-0	27A	147	
28 TO 30	160'-0	17C	146	4' x 10' x 26'
	180'-0	18C	146	
	200'-0	20C	144	
	220'-0	21D	144	4' x 11' x 30'
	240'-0	21F	144	4' x 14' x 30'
	260'-0	23A	144	
	280'-0	24A	140	4' x 14' x 32'
	300'-0	25A	144	
	320'-0	26A	146	
	340'-0	28A	145	
31 TO 33	160'-0	18D	139	4' x 11' x 26'
	180'-0	19B	143	
	200'-0	20D	145	
	220'-0	21D	146	4' x 11' x 30'
	240'-0	21F	147	4' x 14' x 30'
	260'-0	23A	146	
	280'-0	24A	142	4' x 14' x 32'
	300'-0	25A	146	
	320'-0	27A	144	
	340'-0	28A	147	
34 TO 36	160'-0	18D	142	4' x 11' x 26'
	180'-0	19B	146	
	200'-0	20E	143	4' x 11' x 30'
	220'-0	21E	143	4' x 12' x 30'
	240'-0	22A	144	4' x 14' x 30'
	260'-0	24A	136	4' x 14' x 32'
	280'-0	24A	144	
	300'-0	26A	143	
	320'-0	27A	146	
	340'-0	29A	144	

H IN FT.	℄ - ℄ ABUT. BRG.	PILING (HP10x57) NO. & LAYOUT	(1) LRFD Pu, STRENGTH I, DES. LOAD (KIPS)	FOOTING SIZE
37 TO 40	160'-0	18E	142	4' x 11' x 30'
	180'-0	19C	145	
	200'-0	21D	143	
	220'-0	21E	146	4' x 12' x 30'
	240'-0	22A	146	4' x 14' x 30'
	260'-0	24A	138	4' x 14' x 32'
	280'-0	24A	146	
	300'-0	26A	145	
	320'-0	28A	144	
	340'-0	29A	145	

FOOTING SIZE	REINFORCING STEEL (ONE FOOTING) BAR	NO., SIZE & SPACING	LENGTH	WEIGHT (LB.)	TOTAL WEIGHT (LB.)	STRUCTURAL CONCRETE (CY)
4' x 8' x 26'	d2	58 - #9 AS SHOWN	9'-1	1791	3037	30.8
	f1	26 - #5 @ 1'-0	7'-8	208		
	f2	8 - #5 @ 1'-0	25'-8	214		
	g1	26 - #6 @ 1'-0	7'-8	299		
	g2	10 - #7 @ 0'-10	25'-8	525		
4' x 9' x 26'	d2	58 - #9 AS SHOWN	9'-1	1791	3253	34.7
	f1	26 - #5 @ 1'-0	8'-8	235		
	f2	9 - #5 @ 1'-0	25'-8	241		
	g1	26 - #7 @ 1'-0	8'-8	461		
	g2	10 - #7 @ 0'-11	25'-8	525		
4' x 10' x 26'	d2	58 - #9 AS SHOWN	9'-1	1791	3646	38.5
	f1	26 - #5 @ 1'-0	9'-8	262		
	f2	10 - #5 @ 1'-0	25'-8	268		
	g1	31 - #8 @ 0'-10	9'-8	800		
	g2	10 - #7 @ 1'-0	25'-8	525		
4' x 11' x 26'	d2	58 - #9 AS SHOWN	9'-1	1791	3758	42.4
	f1	26 - #5 @ 1'-0	10'-8	289		
	f2	11 - #5 @ 1'-0	25'-8	294		
	g1	31 - #8 @ 0'-10	10'-8	883		
	g2	13 - #6 @ 0'-10½	25'-8	501		
4' x 11' x 30'	d2	58 - #9 AS SHOWN	9'-1	1791	4760	48.9
	f1	30 - #5 @ 1'-0	10'-8	334		
	f2	11 - #5 @ 1'-0	29'-8	340		
	g1	31 - #8 @ 0'-11½	10'-8	883		
	g2	14 - #9 @ 0'-9½	29'-8	1412		
4' x 12' x 30'	d2	58 - #9 AS SHOWN	9'-1	1791	5187	53.3
	f1	30 - #5 @ 1'-0	11'-8	365		
	f2	12 - #5 @ 1'-0	29'-8	371		
	g1	34 - #9 @ 0'-10½	11'-8	1349		
	g2	13 - #9 @ 0'-11½	29'-8	1311		
4' x 14' x 30'	d2	58 - #9 AS SHOWN	9'-1	1791	6141	62.2
	f1	30 - #5 @ 1'-0	13'-8	428		
	f2	14 - #5 @ 1'-0	29'-8	433		
	g1	36 - #9 @ 0'-10	13'-8	1673		
	g2	18 - #9 @ 0'-9½	29'-8	1816		
4' x 14' x 32'	d2	58 - #9 AS SHOWN	9'-1	1791	6521	66.4
	f1	32 - #5 @ 1'-0	13'-8	456		
	f2	14 - #5 @ 1'-0	31'-8	462		
	g1	38 - #9 @ 0'-10	13'-8	1766		
	g2	19 - #9 @ 0'-9	31'-8	2046		

(1) NOTE: PU, STRENGTH I DESIGN LOAD (KIPS) IS NOT THE VALUE USED IN THE FIELD FOR DRIVING PILES.

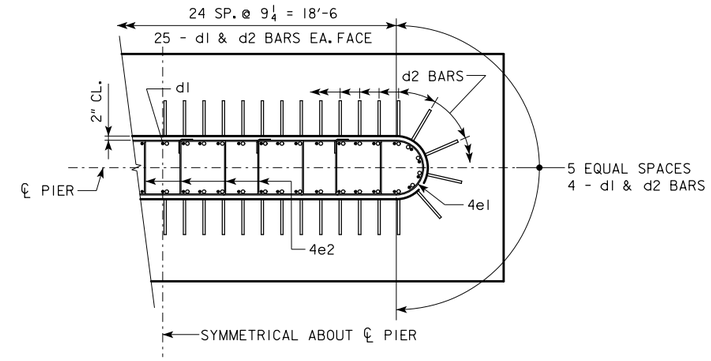

d2 BAR LAYOUT

(SEE SECTION A-A ON SHEET RS40-136-14.)

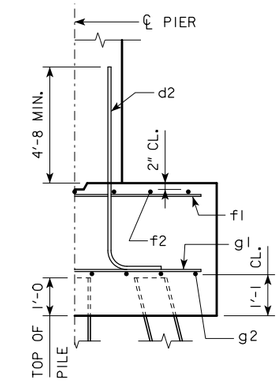

TYPICAL SECTION

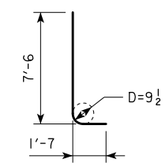

d2

NOTE: D = PIN DIAMETER.
DIMENSIONS ARE OUT TO OUT.

NOTE: THE REINFORCING STEEL QUANTITY IS TO BE INCLUDED ON THE SUMMARY QUANTITIES SHEET IN THE PLAN.

NOTE: THE CONCRETE QUANTITY IS TO BE INCLUDED ON THE SUMMARY QUANTITIES SHEET IN THE PLAN.

NOTE: THE PILE TYPE IS TO BE INCLUDED ON THE SUMMARY QUANTITIES SHEET IN THE PLAN.

FOOTING NOTES:

THESE FOOTINGS ARE DESIGNED AND DETAILED TO BE USED WITH THE CAP AND COLUMN DETAILS OF THE TEE PIERS AS SHOWN ON SHEET RS40-136-14.

BATTER PILES IN EXTERIOR ROWS 1:4 IN THE DIRECTION SHOWN.

STEEL PILING USED AS POINT BEARING SHALL HAVE A MINIMUM DISTANCE OF APPROXIMATELY 10 FEET FROM BOTTOM OF FOOTING TO TOP OF BEARING ROCK. THE PILE LAYOUTS ARE SUCH THAT THE DISTANCE CENTER TO CENTER OF ADJACENT PILING SHALL NOT EXCEED 8'-0.

PIER PILES SHALL BE DRIVEN TO VALUES SHOWN IN DESIGN PLANS.

LATEST REVISION DATE

APPROVED BY BRIDGE ENGINEER

IOWA DOT Highway Division

STANDARD DESIGN - 40' ROADWAY, 3 SPAN BRIDGES

ROLLED STEEL BEAM BRIDGES

OCTOBER, 2014

TEE PIER-HP10x57 SRL-1
STEEL PILE FOOTINGS
20° SKEW - SHEET 1

RS40-138-14

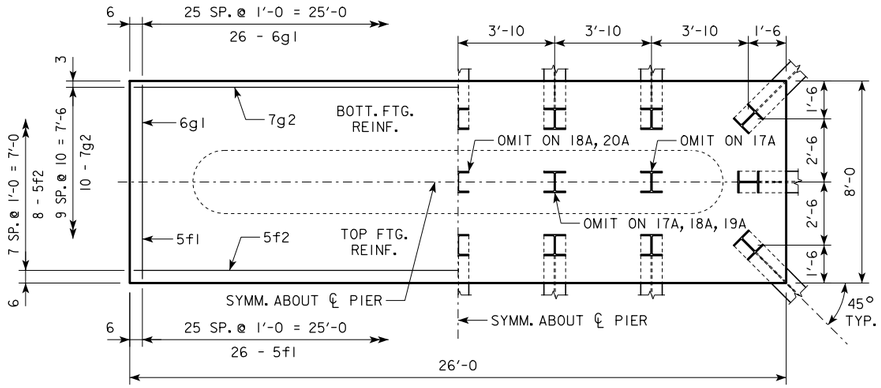

4'-0 x 8'-0 x 26'-0 FOR 17A, 18A, 19A, 20A & 21A

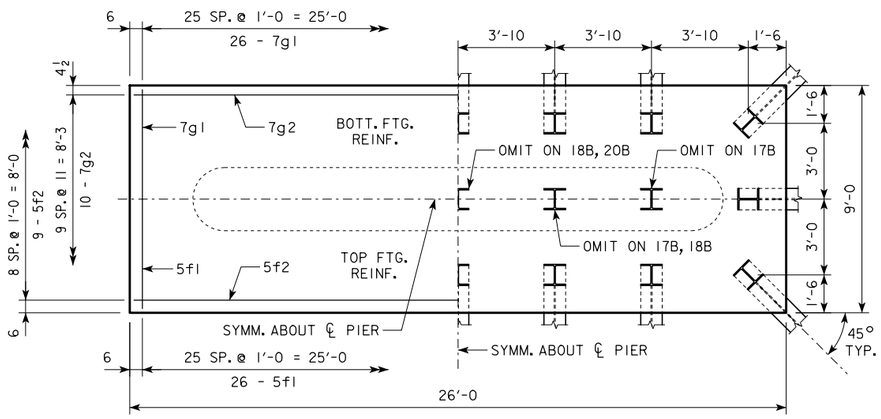

4'-0 x 9'-0 x 26'-0 FOR 17B, 18B, 20B & 21B

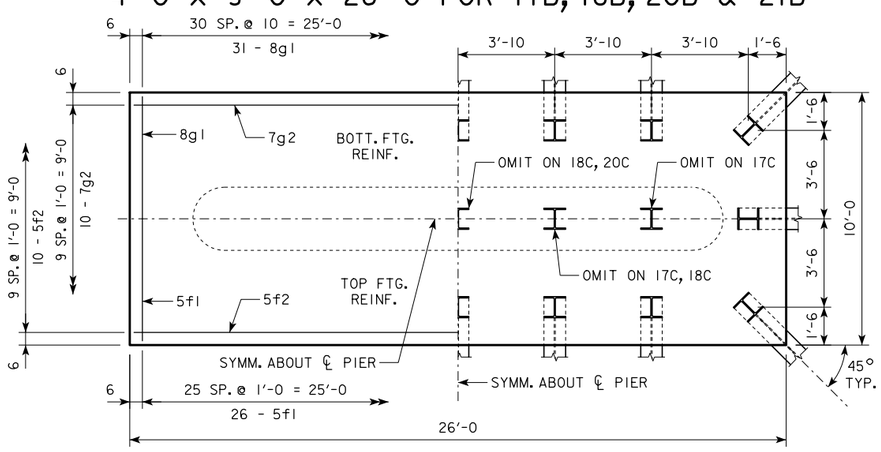

4'-0 x 10'-0 x 26'-0 FOR 17C, 18C & 20C

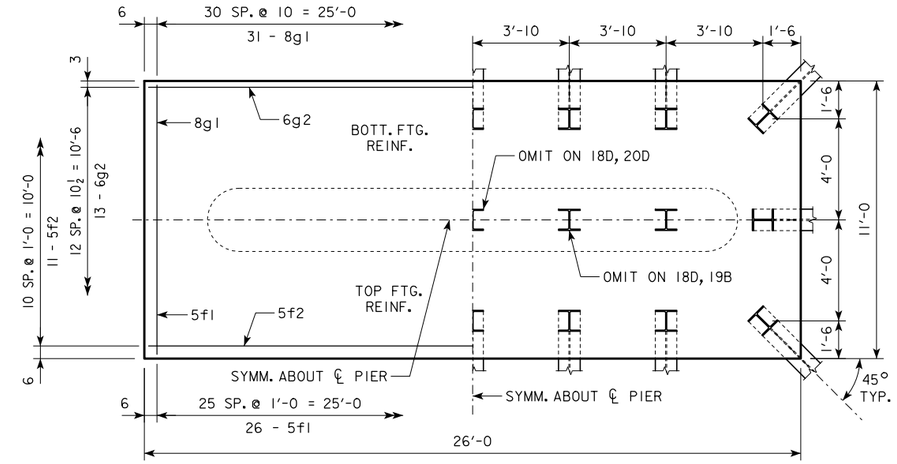

4'-0 x 11'-0 x 26'-0 FOR 18D, 19B, 20D & 21C

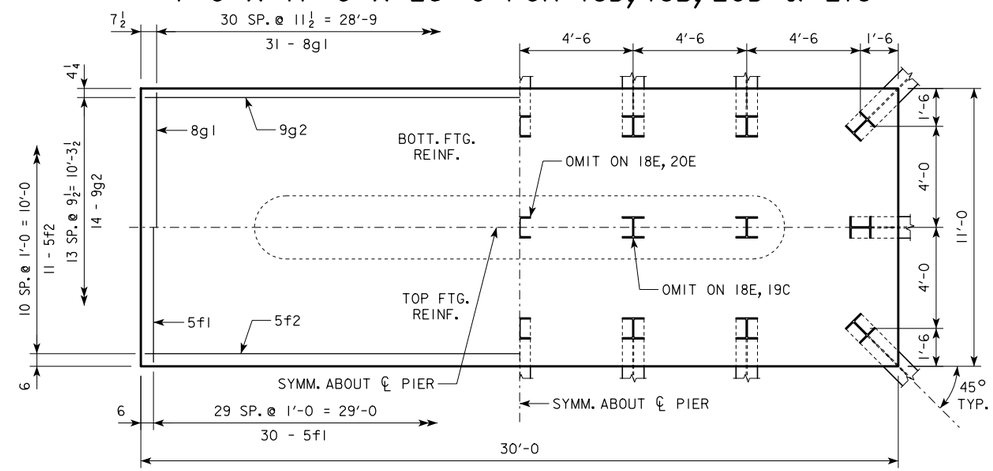

4'-0 x 11'-0 x 30'-0 FOR 18E, 19C, 20E & 21D

NOTE:
SEE SHEET RS40-138-14 FOR FOOTING NOTES.

LATEST REVISION DATE

APPROVED BY BRIDGE ENGINEER

IOWA DOT Highway Division

STANDARD DESIGN - 40' ROADWAY, 3 SPAN BRIDGES

ROLLED STEEL BEAM BRIDGES

OCTOBER, 2014

TEE PIER-HP10x57 SRL-I STEEL PILE FOOTINGS
20° SKEW - SHEET 2

RS40-139-14

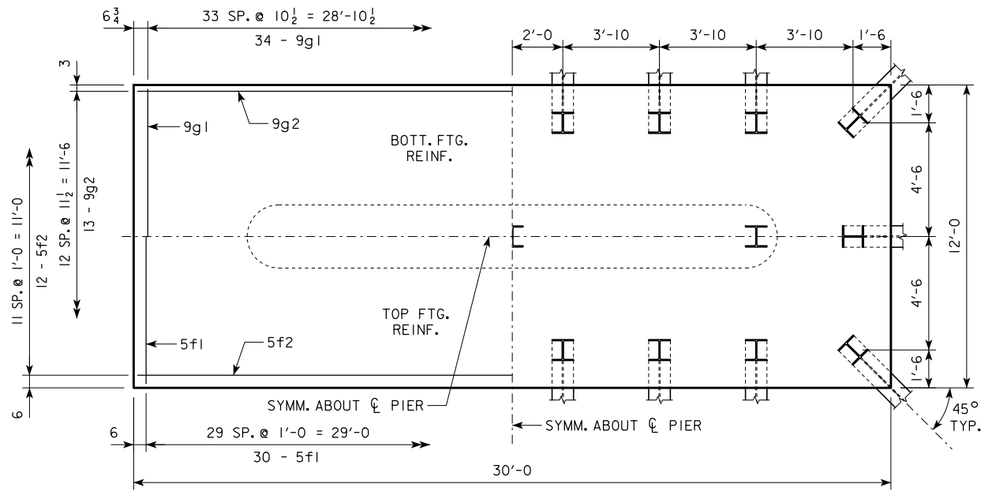

4'-0 x 12'-0 x 30'-0 FOR 21E

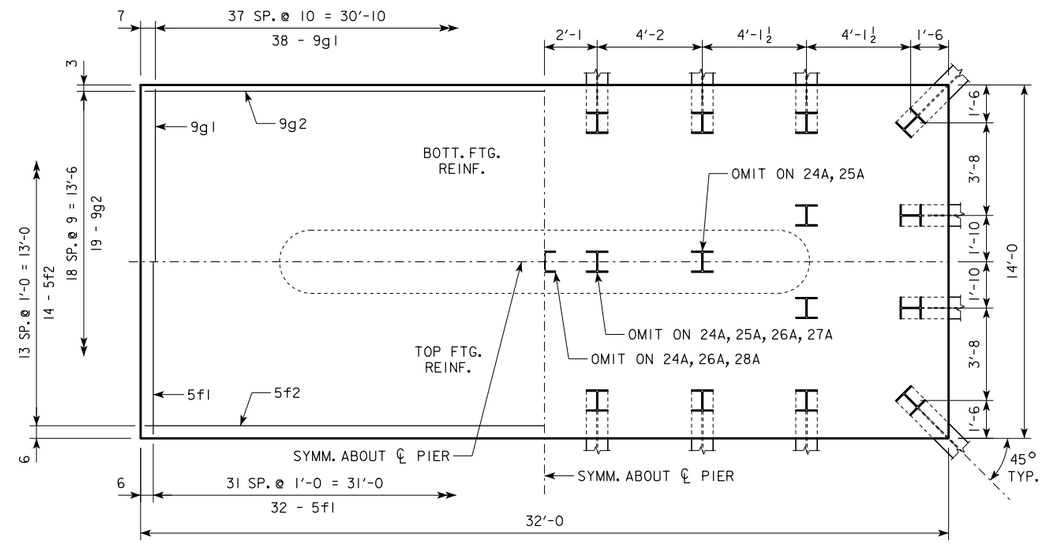

4'-0 x 14'-0 x 32'-0 FOR 24A, 25A, 26A, 27A & 28A

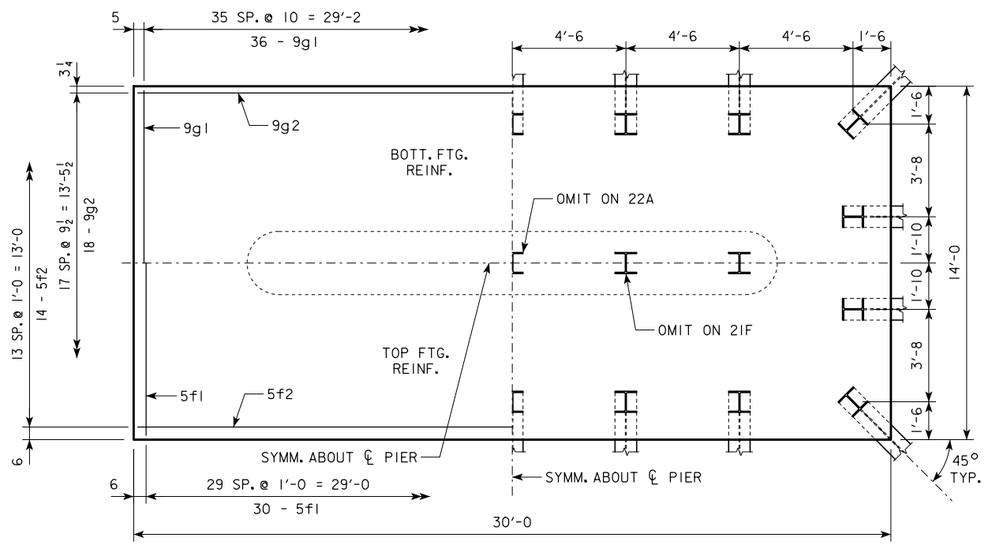

4'-0 x 14'-0 x 30'-0 FOR 21F, 22A & 23A

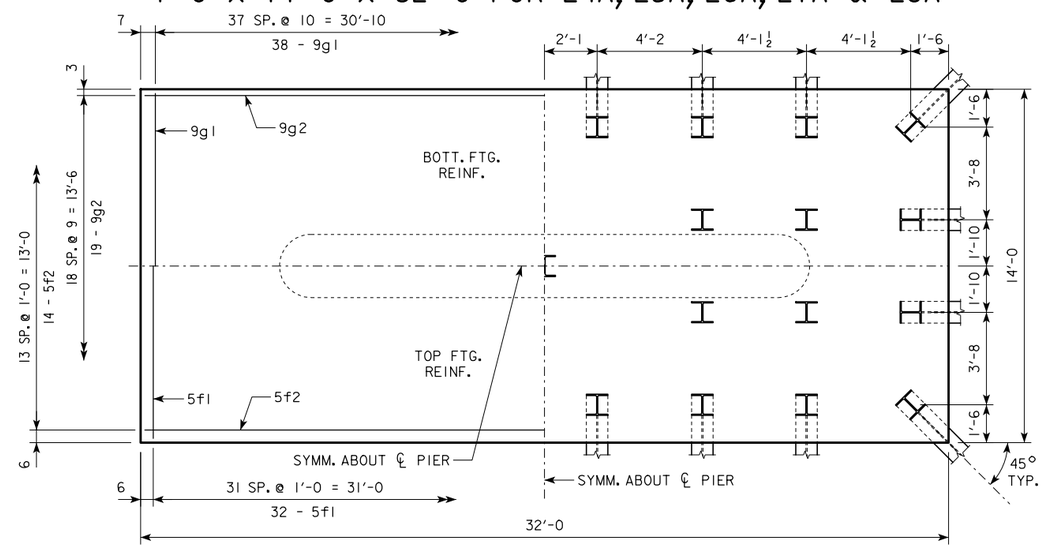

4'-0 x 14'-0 x 32'-0 FOR 29A

NOTE:
SEE SHEET RS40-138-14 FOR FOOTING NOTES.

LATEST REVISION DATE

APPROVED BY BRIDGE ENGINEER

IOWA DOT Highway Division

STANDARD DESIGN - 40' ROADWAY, 3 SPAN BRIDGES

ROLLED STEEL BEAM BRIDGES

OCTOBER, 2014

TEE PIER-HP10x57 SRL-I STEEL PILE FOOTINGS

20° SKEW - SHEET 3

RS40-140-14

H IN FT.	℄ - ℄ ABUT. BRG.	PILING (HP10x57) NO. & LAYOUT	PILING (HP10x57) ① LRFD Pu, STRENGTH I, DES. LOAD (KIPS)	FOOTING SIZE
16 TO 18	160'-0	10A	211	4' x 8' x 26'
	180'-0	11A	213	
	200'-0	12A	208	
	220'-0	13A	215	
	240'-0	14A	215	4' x 9' x 26'
	260'-0	14D	211	4' x 11' x 28'
	280'-0	15A	216	
	300'-0	16A	217	
	320'-0	16B	217	4' x 12' x 28'
	340'-0	17A	218	
19 TO 21	160'-0	10B	215	4' x 9' x 26'
	180'-0	11B	216	
	200'-0	12B	211	
	220'-0	13B	214	4' x 10' x 26'
	240'-0	14B	218	
	260'-0	14D	216	4' x 11' x 28'
	280'-0	16A	210	
	300'-0	16B	211	4' x 12' x 28'
	320'-0	17A	213	
	340'-0	18A	212	
22 TO 24	160'-0	11B	209	4' x 9' x 26'
	180'-0	12B	205	
	200'-0	12C	214	4' x 10' x 26'
	220'-0	13C	217	4' x 11' x 26'
	240'-0	14D	208	4' x 11' x 28'
	260'-0	15A	211	
	280'-0	16A	214	
	300'-0	16B	215	4' x 12' x 28'
	320'-0	17A	217	
	340'-0	18A	216	
25 TO 27	160'-0	11C	212	4' x 10' x 26'
	180'-0	12C	207	
	200'-0	12C	219	
	220'-0	14C	211	4' x 11' x 26'
	240'-0	14D	212	4' x 11' x 28'
	260'-0	15A	216	
	280'-0	16A	218	
	300'-0	16B	219	4' x 12' x 28'
	320'-0	18A	211	
	340'-0	18A	220	
28 TO 30	160'-0	11C	217	4' x 10' x 26'
	180'-0	12C	212	
	200'-0	13B	214	
	220'-0	14C	215	4' x 11' x 26'
	240'-0	14D	216	4' x 11' x 28'
	260'-0	15A	219	
	280'-0	16B	210	4' x 12' x 28'
	300'-0	17A	213	
	320'-0	18A	214	
	340'-0	19A	215	
31 TO 33	160'-0	12D	202	4' x 11' x 26'
	180'-0	12D	214	
	200'-0	13C	216	
	220'-0	14C	219	
	240'-0	14D	219	4' x 11' x 28'
	260'-0	16A	211	
	280'-0	16B	213	4' x 12' x 28'
	300'-0	17A	216	
	320'-0	18A	216	
	340'-0	19A	218	
34 TO 36	160'-0	12D	207	4' x 11' x 26'
	180'-0	12D	219	
	200'-0	13D	213	4' x 11' x 28'
	220'-0	14D	209	
	240'-0	15A	214	
	260'-0	16A	214	
	280'-0	16B	216	4' x 12' x 28'
	300'-0	17A	219	
	320'-0	18A	219	
	340'-0	19B	218	4' x 13' x 28'

H IN FT.	℄ - ℄ ABUT. BRG.	PILING (HP10x57) NO. & LAYOUT	PILING (HP10x57) ① LRFD Pu, STRENGTH I, DES. LOAD (KIPS)	FOOTING SIZE
37 TO 40	160'-0	12E	205	4' x 11' x 28'
	180'-0	12E	217	
	200'-0	13D	218	
	220'-0	14D	214	
	240'-0	15A	218	
	260'-0	16A	218	
	280'-0	16B	219	4' x 12' x 28'
	300'-0	18A	212	
	320'-0	19A	215	
	340'-0	20A	214	4' x 13' x 28'

FOOTING SIZE	REINFORCING STEEL (ONE FOOTING) BAR	NO., SIZE & SPACING	LENGTH	WEIGHT (LB.)	TOTAL WEIGHT (LB.)	STRUCTURAL CONCRETE (CY)
4' x 8' x 26'	d2	58 - #9 AS SHOWN	9'-1	1791	3299	30.8
	f1	26 - #5 @ 1'-0	7'-8	208		
	f2	8 - #5 @ 1'-0	25'-8	214		
	g1	26 - #6 @ 1'-0	7'-8	299		
	g2	15 - #7 @ 0'-6	25'-8	787		
4' x 9' x 26'	d2	58 - #9 AS SHOWN	9'-1	1791	3445	34.7
	f1	26 - #5 @ 1'-0	8'-8	235		
	f2	9 - #5 @ 1'-0	25'-8	241		
	g1	30 - #6 @ 0'-10½	8'-8	391		
	g2	15 - #7 @ 0'-7	25'-8	787		
4' x 10' x 26'	d2	58 - #9 AS SHOWN	9'-1	1791	3716	38.5
	f1	26 - #5 @ 1'-0	9'-8	262		
	f2	10 - #5 @ 1'-0	25'-8	268		
	g1	29 - #7 @ 0'-10½	9'-8	573		
	g2	12 - #8 @ 0'-10	25'-8	822		
4' x 11' x 26'	d2	58 - #9 AS SHOWN	9'-1	1791	3965	42.4
	f1	26 - #5 @ 1'-0	10'-8	289		
	f2	11 - #5 @ 1'-0	25'-8	294		
	g1	27 - #8 @ 0'-11½	10'-8	769		
	g2	12 - #8 @ 0'-11	25'-8	822		
4' x 11' x 28'	d2	58 - #9 AS SHOWN	9'-1	1791	4705	45.6
	f1	28 - #5 @ 1'-0	10'-8	312		
	f2	11 - #5 @ 1'-0	27'-8	317		
	g1	34 - #8 @ 0'-10	10'-8	968		
	g2	14 - #9 @ 0'-9½	27'-8	1317		
4' x 12' x 28'	d2	58 - #9 AS SHOWN	9'-1	1791	5198	49.8
	f1	28 - #5 @ 1'-0	11'-8	341		
	f2	12 - #5 @ 1'-0	27'-8	346		
	g1	33 - #9 @ 0'-10	11'-8	1309		
	g2	15 - #9 @ 0'-9½	27'-8	1411		
4' x 13' x 28'	d2	58 - #9 AS SHOWN	9'-1	1791	5505	53.9
	f1	28 - #5 @ 1'-0	12'-8	370		
	f2	13 - #5 @ 1'-0	27'-8	375		
	g1	34 - #9 @ 0'-10	12'-8	1464		
	g2	16 - #9 @ 0'-10	27'-8	1505		

① NOTE: PU, STRENGTH I DESIGN LOAD (KIPS) IS NOT THE VALUE USED IN THE FIELD FOR DRIVING PILES.

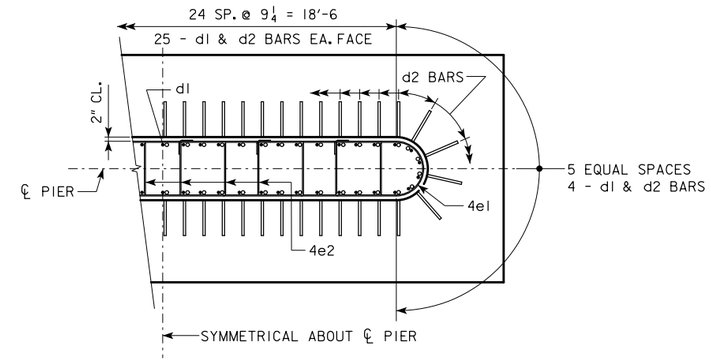

d2 BAR LAYOUT

(SEE SECTION A-A ON SHEET RS40-136-14.)

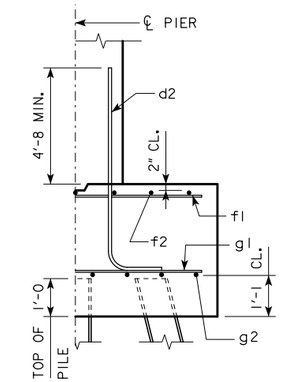

TYPICAL SECTION

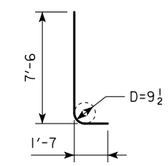

d2

NOTE: D = PIN DIAMETER.
DIMENSIONS ARE OUT TO OUT.

NOTE: THE REINFORCING STEEL QUANTITY IS TO BE INCLUDED ON THE SUMMARY QUANTITIES SHEET IN THE PLAN.

NOTE: THE CONCRETE QUANTITY IS TO BE INCLUDED ON THE SUMMARY QUANTITIES SHEET IN THE PLAN.

NOTE: THE PILE TYPE IS TO BE INCLUDED ON THE SUMMARY QUANTITIES SHEET IN THE PLAN.

FOOTING NOTES:

THESE FOOTINGS ARE DESIGNED AND DETAILED TO BE USED WITH THE CAP AND COLUMN DETAILS OF THE TEE PIERS AS SHOWN ON SHEET RS40-136-14.

BATTER PILES IN EXTERIOR ROWS 1:4 IN THE DIRECTION SHOWN.

STEEL PILING USED AS POINT BEARING SHALL HAVE A MINIMUM DISTANCE OF APPROXIMATELY 10 FEET FROM BOTTOM OF FOOTING TO TOP OF BEARING ROCK. THE PILE LAYOUTS ARE SUCH THAT THE DISTANCE CENTER TO CENTER OF ADJACENT PILING SHALL NOT EXCEED 8'-0.

PIER PILES SHALL BE DRIVEN TO VALUES SHOWN IN DESIGN PLANS.

LATEST REVISION DATE

APPROVED BY BRIDGE ENGINEER

IOWA DOT Highway Division

STANDARD DESIGN - 40' ROADWAY, 3 SPAN BRIDGES

ROLLED STEEL BEAM BRIDGES

OCTOBER, 2014

TEE PIER-HP10x57 SRL-2
STEEL PILE FOOTINGS
20° SKEW - SHEET 1

RS40-141-14

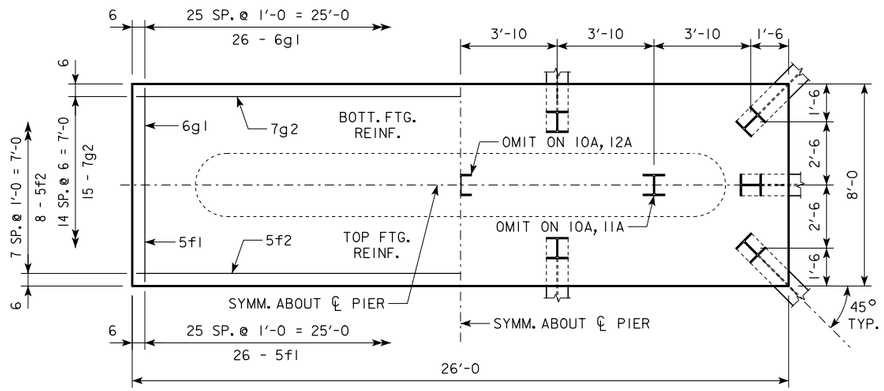

4'-0 x 8'-0 x 26'-0 FOR 10A, 11A, 12A & 13A

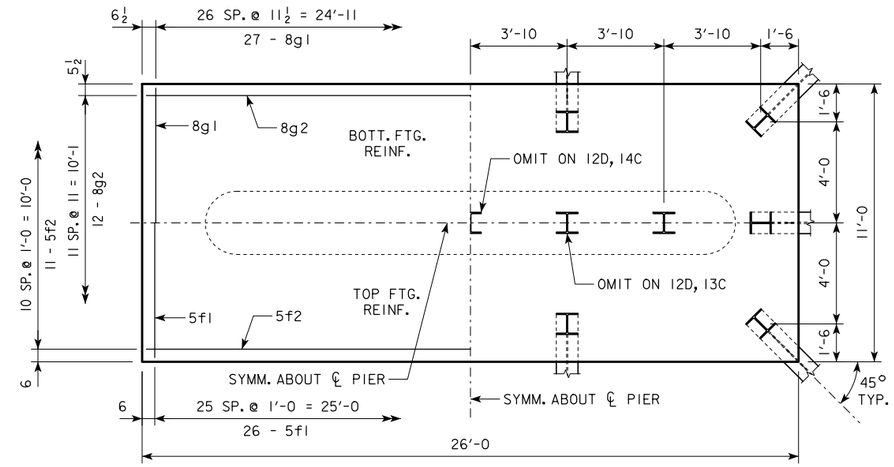

4'-0 x 11'-0 x 26'-0 FOR 12D, 13C & 14C

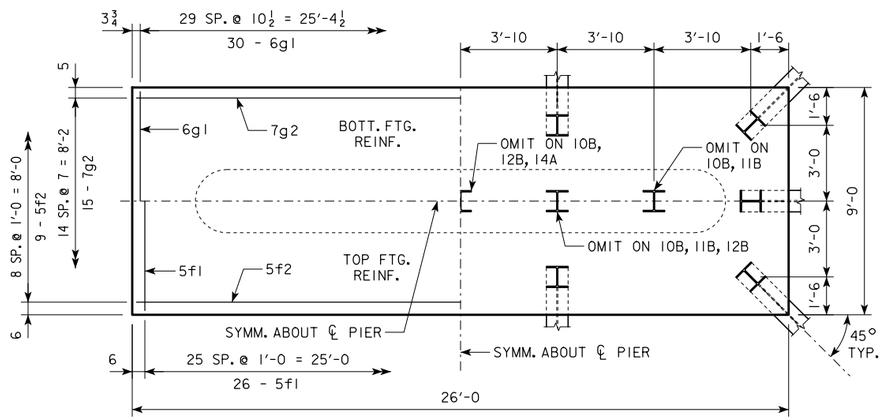

4'-0 x 9'-0 x 26'-0 FOR 10B, 11B, 12B & 14A

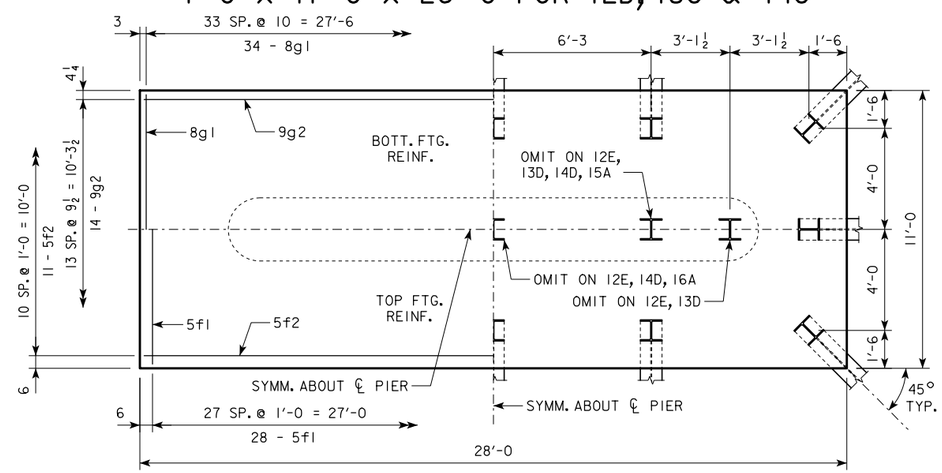

4'-0 x 11'-0 x 28'-0 FOR 12E, 13D, 14D, 15A & 16A

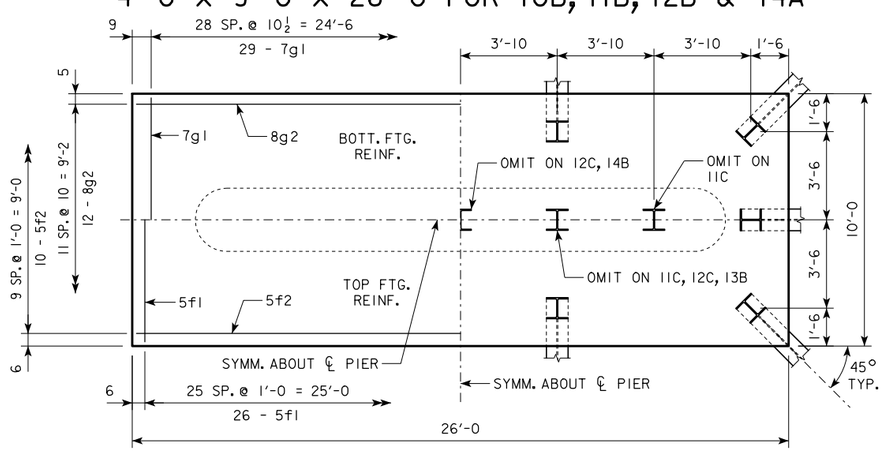

4'-0 x 10'-0 x 26'-0 FOR 11C, 12C, 13B & 14B

NOTE:
SEE SHEET RS40-141-14 FOR FOOTING NOTES.

LATEST REVISION DATE

APPROVED BY BRIDGE ENGINEER

IOWA DOT Highway Division

STANDARD DESIGN - 40' ROADWAY, 3 SPAN BRIDGES

ROLLED STEEL BEAM BRIDGES

OCTOBER, 2014

TEE PIER-HP10x57 SRL-2
STEEL PILE FOOTINGS
20° SKEW - SHEET 2

RS40-142-14

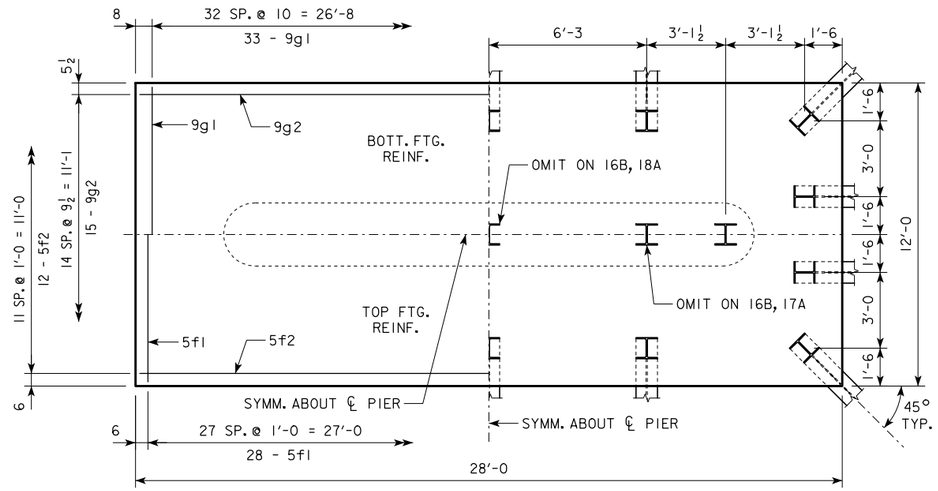

4'-0 x 12'-0 x 28'-0 FOR 16B, 17A, 18A & 19A

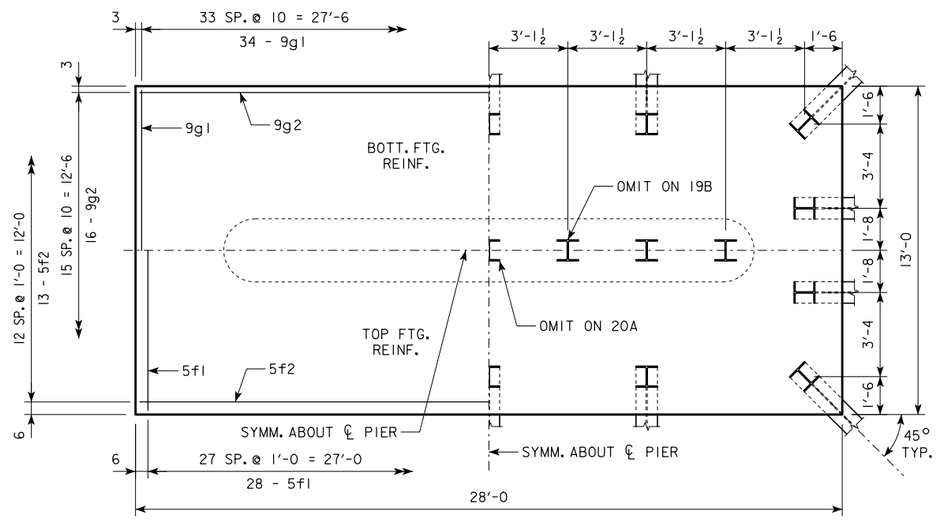

4'-0 x 13'-0 x 28'-0 FOR 19B & 20A

NOTE:
SEE SHEET RS40-141-14 FOR FOOTING NOTES.

LATEST REVISION DATE

APPROVED BY BRIDGE ENGINEER

IOWA DOT Highway Division

STANDARD DESIGN - 40' ROADWAY, 3 SPAN BRIDGES

ROLLED STEEL BEAM BRIDGES

OCTOBER, 2014

TEE PIER-HP10x57 SRL-2
STEEL PILE FOOTINGS
20° SKEW - SHEET 3

RS40-143-14

H IN FT.	℄ - ℄ ABUT. BRG.	FOOTING SIZE
16 TO 18	160′-0	4′ x 8′ x 27′
	180′-0	
	200′-0	4′ x 9′ x 27′
	220′-0	
	240′-0	4′ x 9′ x 29′
	260′-0	4′ x 10′ x 29′
	280′-0	
	300′-0	4′ x 10′ x 31′
	320′-0	
	340′-0	4′ x 11′ x 31′
19 TO 21	160′-0	4′ x 8′ x 27′
	180′-0	
	200′-0	4′ x 9′ x 27′
	220′-0	
	240′-0	4′ x 9′ x 29′
	260′-0	4′ x 10′ x 29′
	280′-0	
	300′-0	4′ x 10′ x 31′
	320′-0	4′ x 11′ x 31′
	340′-0	
22 TO 24	160′-0	4′ x 8′ x 27′
	180′-0	4′ x 9′ x 27′
	200′-0	
	220′-0	4′ x 9′ x 29′
	240′-0	4′ x 10′ x 29′
	260′-0	
	280′-0	4′ x 10′ x 31′
	300′-0	
	320′-0	4′ x 11′ x 31′
	340′-0	
25 TO 27	160′-0	4′ x 8′ x 27′
	180′-0	4′ x 9′ x 27′
	200′-0	
	220′-0	4′ x 9′ x 29′
	240′-0	4′ x 10′ x 29′
	260′-0	
	280′-0	4′ x 10′ x 31′
	300′-0	4′ x 11′ x 31′
	320′-0	
	340′-0	
28 TO 30	160′-0	4′ x 9′ x 27′
	180′-0	
	200′-0	4′ x 9′ x 29′
	220′-0	
	240′-0	4′ x 10′ x 29′
	260′-0	
	280′-0	4′ x 10′ x 31′
	300′-0	4′ x 11′ x 31′
	320′-0	
	340′-0	4′ x 11′ x 33′
31 TO 33	160′-0	4′ x 9′ x 27′
	180′-0	
	200′-0	4′ x 9′ x 29′
	220′-0	4′ x 10′ x 29′
	240′-0	
	260′-0	4′ x 10′ x 31′
	280′-0	
	300′-0	4′ x 11′ x 31′
	320′-0	
	340′-0	4′ x 11′ x 33′
34 TO 36	160′-0	4′ x 9′ x 27′
	180′-0	
	200′-0	4′ x 9′ x 29′
	220′-0	4′ x 10′ x 29′
	240′-0	
	260′-0	4′ x 10′ x 31′
	280′-0	4′ x 11′ x 31′
	300′-0	
	320′-0	
	340′-0	4′ x 11′ x 33′

H IN FT.	℄ - ℄ ABUT. BRG.	FOOTING SIZE
37 TO 40	160′-0	4′ x 9′ x 27′
	180′-0	4′ x 9′ x 29′
	200′-0	
	220′-0	4′ x 10′ x 29′
	240′-0	
	260′-0	4′ x 10′ x 31′
	280′-0	4′ x 11′ x 31′
	300′-0	
	320′-0	4′ x 11′ x 33′
	340′-0	

FOOTING SIZE	REINFORCING STEEL (ONE FOOTING)					STRUCTURAL CONCRETE (CY)
	BAR	NO., SIZE & SPACING	LENGTH	WEIGHT (LB.)	TOTAL WEIGHT (LB.)	
4′ x 8′ x 27′	d2	58 - #9 AS SHOWN	9′-11	1956	3107	32.0
	f1	27 - #5 @ 1′-0	7′-8	216		
	f2	8 - #5 @ 1′-0	26′-8	223		
	g1	27 - #6 @ 1′-0	7′-8	311		
	g2	10 - #6 @ 0′-10	26′-8	401		
4′ x 9′ x 27′	d2	58 - #9 AS SHOWN	9′-11	1956	3345	36.0
	f1	27 - #5 @ 1′-0	8′-8	244		
	f2	9 - #5 @ 1′-0	26′-8	250		
	g1	31 - #6 @ 0′-10½	8′-8	404		
	g2	9 - #7 @ 1′-0	26′-8	491		
4′ x 9′ x 29′	d2	58 - #9 AS SHOWN	9′-11	1956	3785	38.7
	f1	29 - #5 @ 1′-0	8′-8	262		
	f2	9 - #5 @ 1′-0	28′-8	269		
	g1	35 - #6 @ 0′-10	8′-8	456		
	g2	11 - #8 @ 0′-10	28′-8	842		
4′ x 10′ x 29′	d2	58 - #9 AS SHOWN	9′-11	1956	4137	43.0
	f1	29 - #5 @ 1′-0	9′-8	292		
	f2	10 - #5 @ 1′-0	28′-8	299		
	g1	34 - #7 @ 0′-10	9′-8	672		
	g2	12 - #8 @ 0′-10	28′-8	918		
4′ x 10′ x 31′	d2	58 - #9 AS SHOWN	9′-11	1956	4794	45.9
	f1	31 - #5 @ 1′-0	9′-8	313		
	f2	10 - #5 @ 1′-0	30′-8	320		
	g1	37 - #7 @ 0′-10	9′-8	731		
	g2	18 - #8 @ 0′-6½	30′-8	1474		
4′ x 11′ x 31′	d2	58 - #9 AS SHOWN	9′-11	1956	5271	50.5
	f1	31 - #5 @ 1′-0	10′-8	345		
	f2	11 - #5 @ 1′-0	30′-8	352		
	g1	37 - #8 @ 0′-10	10′-8	1054		
	g2	15 - #9 @ 0′-9	30′-8	1564		
4′ x 11′ x 33′	d2	58 - #9 AS SHOWN	9′-11	1956	5945	53.8
	f1	33 - #5 @ 1′-0	10′-8	367		
	f2	11 - #5 @ 1′-0	32′-8	375		
	g1	40 - #8 @ 0′-10	10′-8	1139		
	g2	15 - #10 @ 0′-9	32′-8	2108		

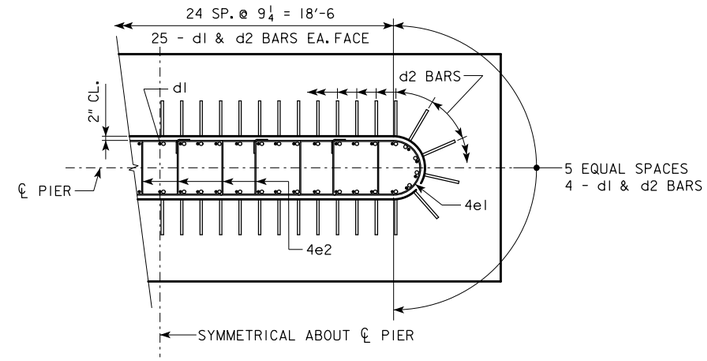

d2 BAR LAYOUT
(SEE SECTION A-A ON SHEET RS40-136-14.)

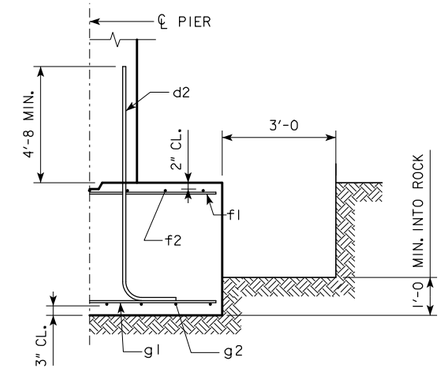

TYPICAL SECTION

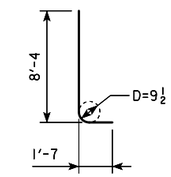

d2

NOTE: D = PIN DIAMETER.
DIMENSIONS ARE OUT TO OUT.

NOTE: THE REINFORCING STEEL QUANTITY IS TO BE INCLUDED ON THE SUMMARY QUANTITIES SHEET IN THE PLAN.

NOTE: THE CONCRETE QUANTITY IS TO BE INCLUDED ON THE SUMMARY QUANTITIES SHEET IN THE PLAN.

FOOTING NOTES:

THESE SPREAD FOOTINGS ARE DESIGNED AND DETAILED TO BE USED WITH THE CAP AND COLUMN DETAILS OF THE TEE PIERS AS SHOWN ON SHEET RS40-136-14.

THESE SPREAD FOOTINGS SHALL EXTEND AT LEAST 12 INCHES INTO SUITABLE FOUNDATION ROCK AND THE LAST 12 INCHES OF ROCK EXCAVATION SHALL BE TO NEAT LINES OF MASONRY. THE FOUNDATION ROCK SHALL HAVE A MINIMUM LRFD NOMINAL BEARING RESISTANCE OF 30 KIPS PER SQUARE FOOT (ALLOWABLE BEARING VALUE OF AT LEAST 10 KIPS PER SQUARE FOOT).

LATEST REVISION DATE

APPROVED BY BRIDGE ENGINEER

IOWA DOT Highway Division

STANDARD DESIGN - 40′ ROADWAY, 3 SPAN BRIDGES

ROLLED STEEL BEAM BRIDGES

OCTOBER, 2014

TEE PIER - SPREAD FOOTINGS
20° SKEW - SHEET 1

RS40-144-14

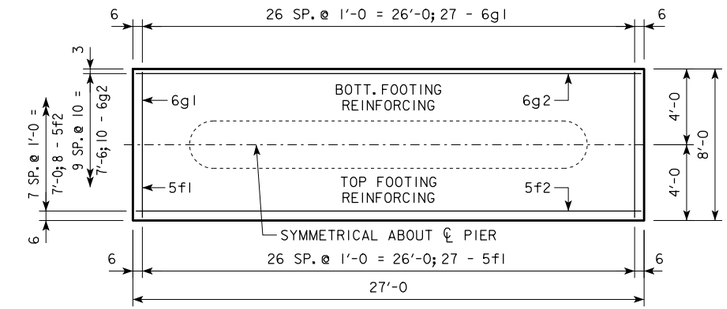

4'-0 x 8'-0 x 27'-0

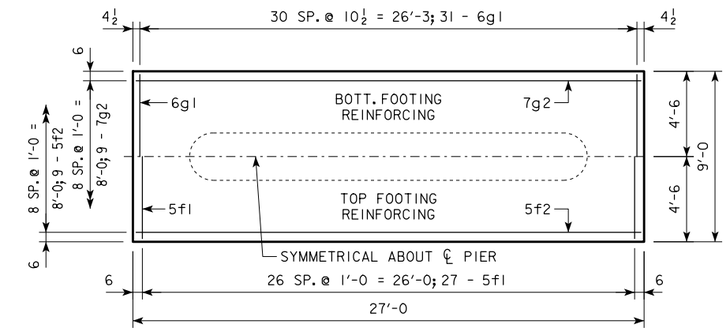

4'-0 x 9'-0 x 27'-0

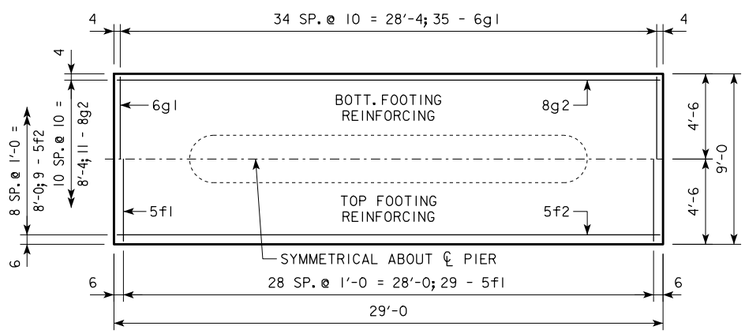

4'-0 x 9'-0 x 29'-0

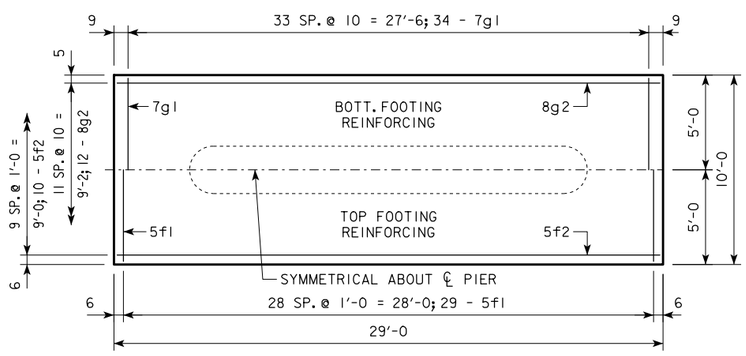

4'-0 x 10'-0 x 29'-0

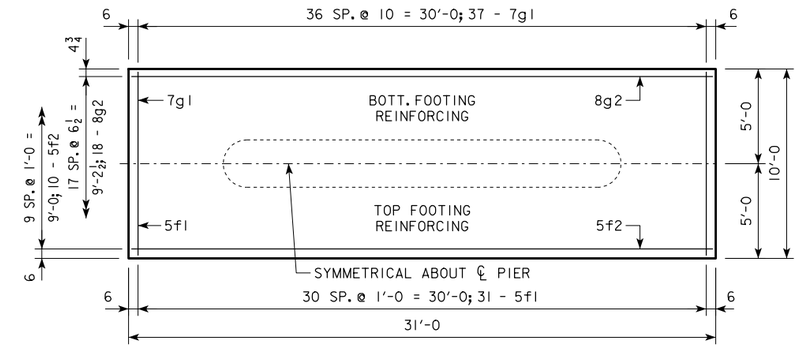

4'-0 x 10'-0 x 31'-0

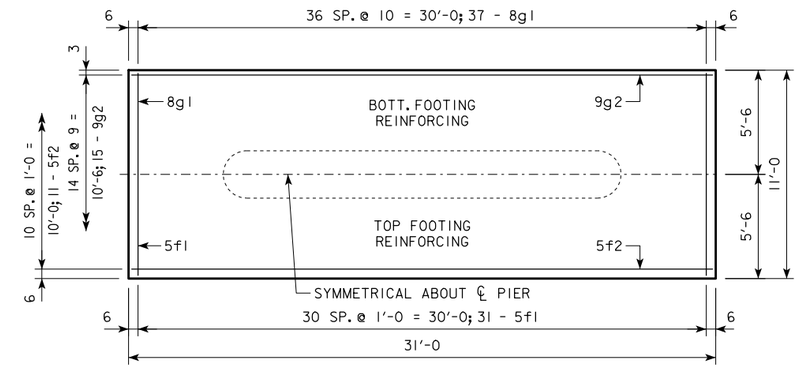

4'-0 x 11'-0 x 31'-0

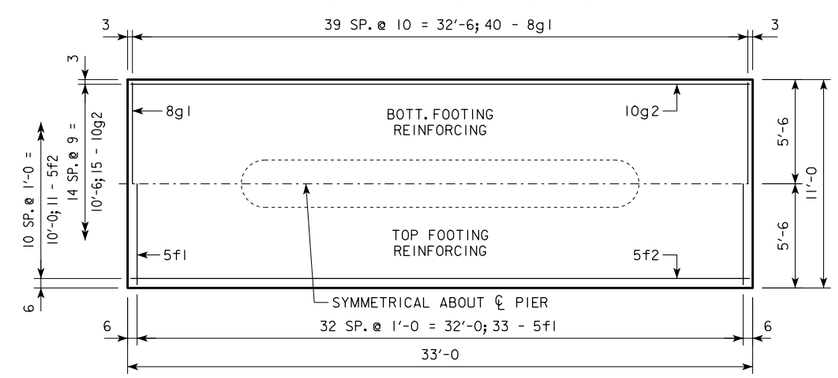

4'-0 x 11'-0 x 33'-0

NOTE:
SEE SHEET RS40-144-14 FOR FOOTING NOTES.

LATEST REVISION DATE

APPROVED BY BRIDGE ENGINEER

IOWA DOT Highway Division

STANDARD DESIGN - 40' ROADWAY, 3 SPAN BRIDGES

ROLLED STEEL BEAM BRIDGES

OCTOBER, 2014

TEE PIER - SPREAD FOOTINGS

20° SKEW - SHEET 2

RS40-145-14

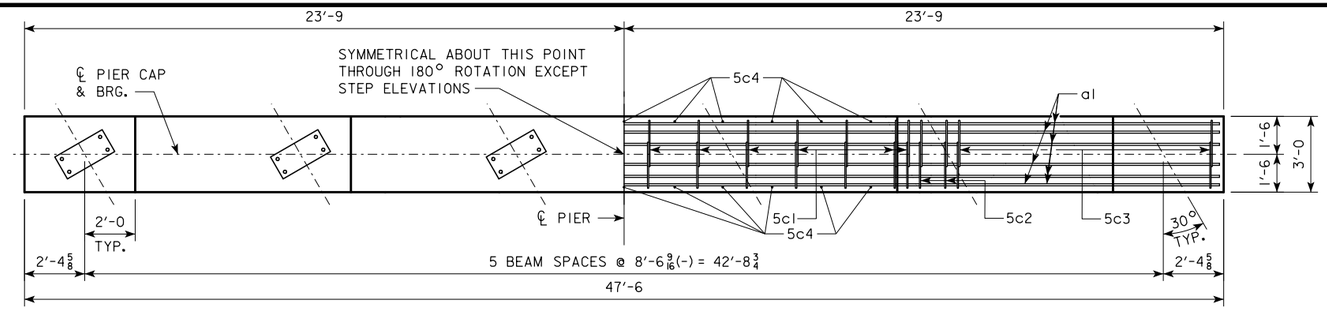

CAP PLAN

NOTE:
ANCHOR BOLTS REQUIRED FOR FIXED PIER BEARINGS ONLY. FOR BOLT AND BEARING SIZES, SEE RS40-093-14, RS40-094-14 OR RS40-095-14.

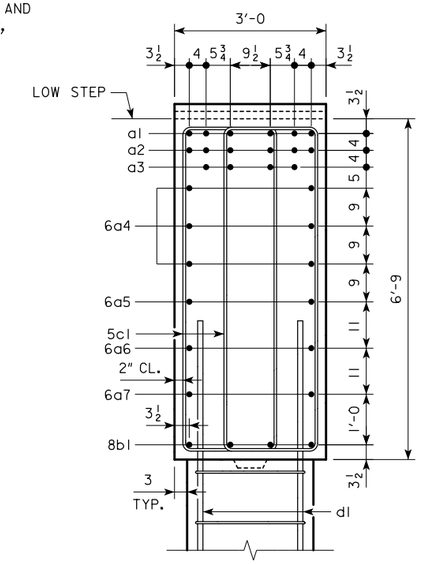

SECTION B-B

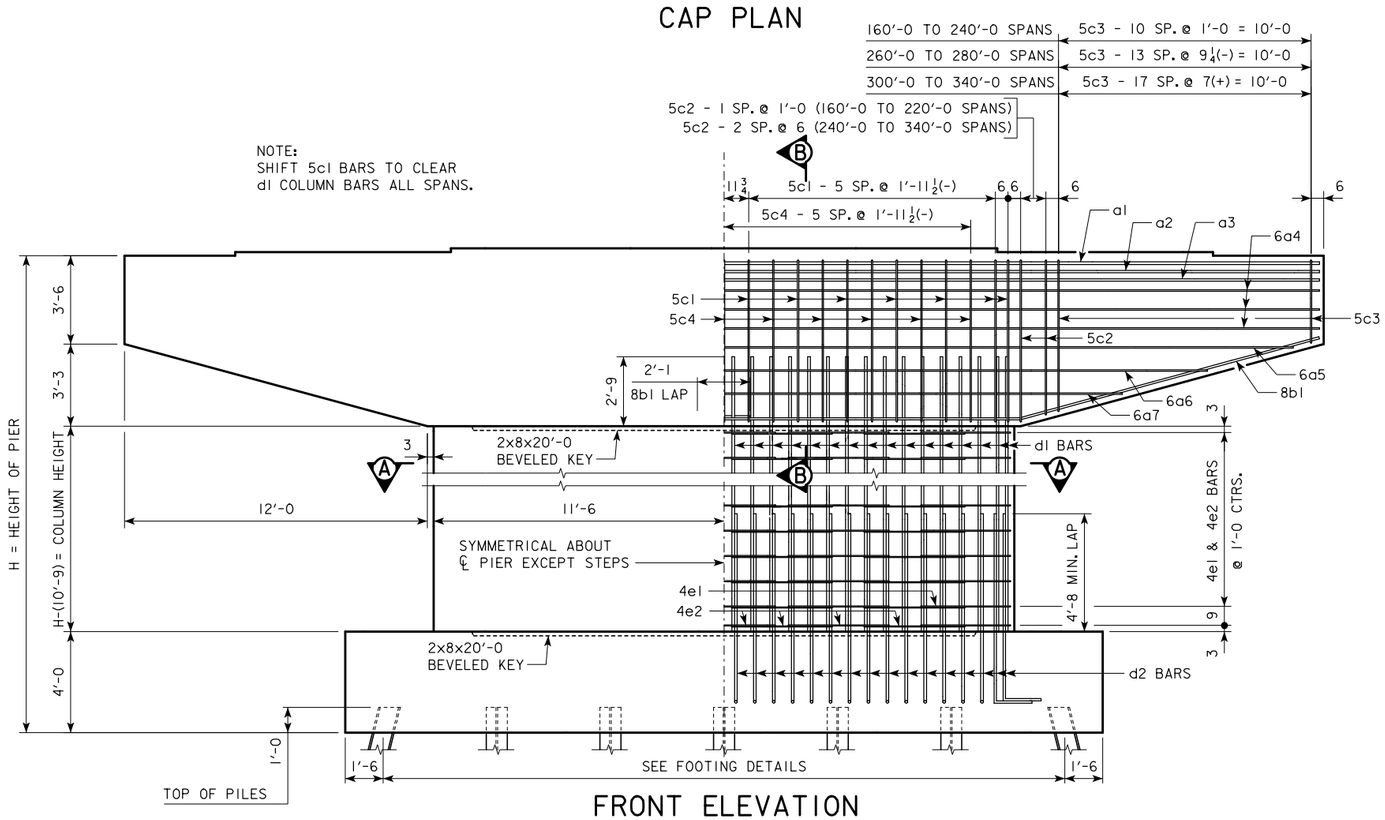

FRONT ELEVATION

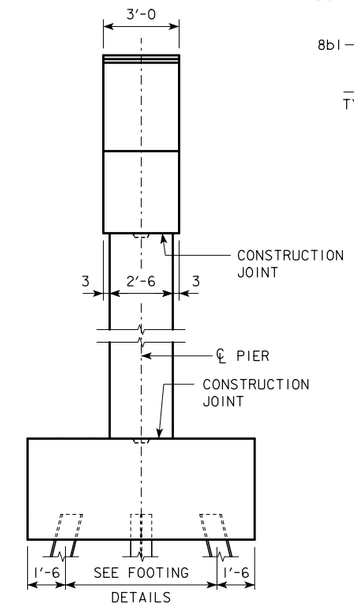

END ELEVATION

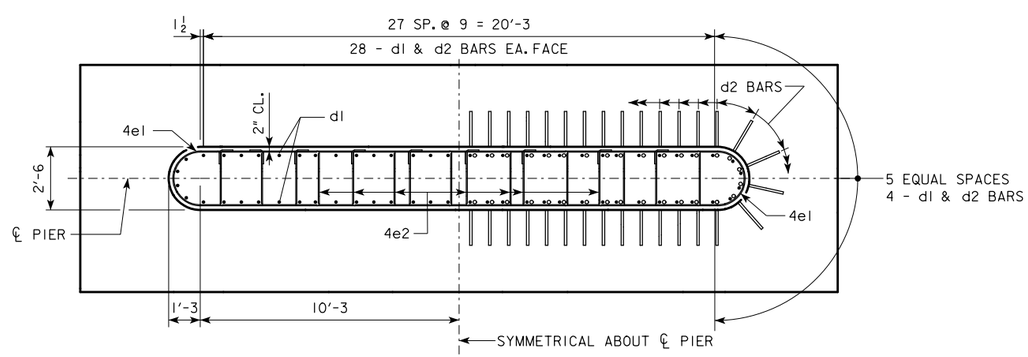

SECTION A-A

LATEST REVISION DATE

APPROVED BY BRIDGE ENGINEER

IOWA DOT Highway Division

STANDARD DESIGN - 40' ROADWAY, 3 SPAN BRIDGES

ROLLED STEEL BEAM BRIDGES

OCTOBER, 2014

TEE PIER CAP & COLUMN DETAILS

30° SKEW

RS40-146-10

CAP

REINFORCING STEEL																																				
℄ - ℄ ABUT. BEARINGS			160'-0			180'-0			200'-0			220'-0			240'-0			260'-0			280'-0			300'-0			320'-0			340'-0		
BAR	LENGTH	SHAPE	NO.	SIZE	WEIGHT	NO.	SIZE	WEIGHT	NO.	SIZE	WEIGHT	NO.	SIZE	WEIGHT	NO.	SIZE	WEIGHT	NO.	SIZE	WEIGHT	NO.	SIZE	WEIGHT	NO.	SIZE	WEIGHT	NO.	SIZE	WEIGHT	NO.	SIZE	WEIGHT
a1	47'-2		6	9	962	6	9	962	6	10	1218	6	10	1218	6	10	1218	6	11	1504	6	11	1504	6	11	1504	6	11	1504	6	11	1504
a2	47'-2		6	8	756	6	9	962	6	9	962	6	9	962	6	10	1218	6	10	1218	6	11	1504	6	11	1504	6	11	1504	6	11	1504
a3	47'-2		--	--	--	--	--	--	--	--	--	--	--	--	--	--	--	--	--	--	--	--	--	4	6	283	4	7	386	4	9	641
6a4	47'-2		6	6	425	6	6	425	6	6	425	6	6	425	6	6	425	6	6	425	6	6	425	6	6	425	6	6	425	6	6	425
6a5	45'-0		2	6	135	2	6	135	2	6	135	2	6	135	2	6	135	2	6	135	2	6	135	2	6	135	2	6	135	2	6	135
6a6	38'-3		2	6	115	2	6	115	2	6	115	2	6	115	2	6	115	2	6	115	2	6	115	2	6	115	2	6	115	2	6	115
6a7	31'-6		2	6	95	2	6	95	2	6	95	2	6	95	2	6	95	2	6	95	2	6	95	2	6	95	2	6	95	2	6	95
8b1	25'-1		8	8	536	8	8	536	8	8	536	8	8	536	8	8	536	8	8	536	8	8	536	8	8	536	8	8	536	8	8	536
5c1	17'-7		28	5	514	28	5	514	28	5	514	28	5	514	28	5	514	28	5	514	28	5	514	28	5	514	28	5	514	28	5	514
5c2	VARIES		8	5	145	8	5	145	8	5	145	8	5	145	12	5	217	12	5	217	12	5	217	12	5	217	12	5	217	12	5	217
5c3	VARIES		44	5	642	44	5	642	44	5	642	44	5	642	44	5	642	56	5	818	56	5	818	72	5	1051	72	5	1051	72	5	1051
5c4	6'-11		22	5	159	22	5	159	22	5	159	22	5	159	22	5	159	22	5	159	22	5	159	22	5	159	22	5	159	22	5	159
① TOTAL (LB.)			4484			4690			4946			4946			5274			5736			6022			6538			6641			6896		
STRUCTURAL CONCRETE (CY)			32.5			32.5			32.5			32.5			32.5			32.5			32.5			32.5			32.5			32.5		

BENT BAR DETAILS

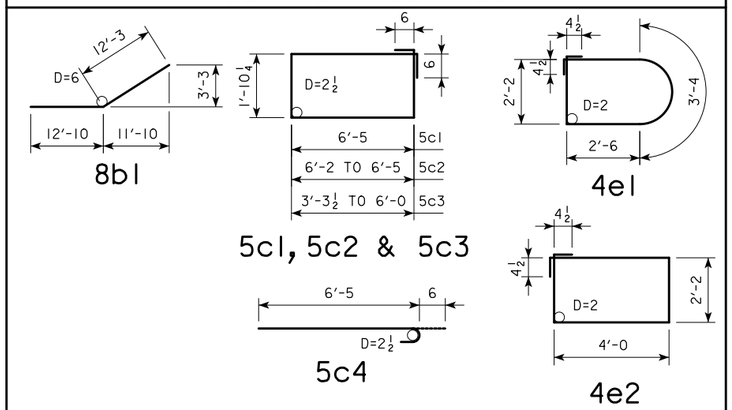

NOTE: ALL DIMENSIONS ARE OUT TO OUT.
D = PIN DIAMETER.

NOTE: THE REINFORCING STEEL QUANTITY IS TO BE INCLUDED ON THE SUMMARY QUANTITIES SHEET IN THE PLAN.

NOTE: THE CONCRETE QUANTITY IS TO BE INCLUDED ON THE SUMMARY QUANTITIES SHEET IN THE PLAN.

NOTE: THE PILE TYPE IS TO BE INCLUDED ON THE SUMMARY QUANTITIES SHEET IN THE PLAN.

COLUMN

H IN FEET	COLUMN HEIGHT	STRUCTURAL CONCRETE (CY)	REINFORCING STEEL												TOTAL WEIGHT (LB.)
			d1 BAR				4e1 BAR				4e2 BAR				
			NO.	SIZE	LENGTH	WEIGHT	NO.	SIZE	LENGTH	WEIGHT	NO.	SIZE	LENGTH	WEIGHT	
16	5'-3	10.9	64	9	8'-0	1741	12	4	11'-3	90	42	4	13'-1	367	2198
17	6'-3	13.0	64	9	9'-0	1958	14	4	11'-3	105	49	4	13'-1	428	2491
18	7'-3	15.1	64	9	10'-0	2176	16	4	11'-3	120	56	4	13'-1	489	2785
19	8'-3	17.2	64	9	11'-0	2394	18	4	11'-3	135	63	4	13'-1	551	3080
20	9'-3	19.2	64	9	12'-0	2611	20	4	11'-3	150	70	4	13'-1	612	3373
21	10'-3	21.3	64	9	13'-0	2829	22	4	11'-3	165	77	4	13'-1	673	3667
22	11'-3	23.4	64	9	14'-0	3046	24	4	11'-3	180	84	4	13'-1	734	3960
23	12'-3	25.5	64	9	15'-0	3264	26	4	11'-3	195	91	4	13'-1	795	4254
24	13'-3	27.6	64	9	16'-0	3482	28	4	11'-3	210	98	4	13'-1	856	4548
25	14'-3	29.6	64	9	17'-0	3699	30	4	11'-3	225	105	4	13'-1	918	4842
26	15'-3	31.7	64	9	18'-0	3917	32	4	11'-3	240	112	4	13'-1	979	5136
27	16'-3	33.8	64	9	19'-0	4134	34	4	11'-3	256	119	4	13'-1	1040	5430
28	17'-3	35.9	64	9	20'-0	4352	36	4	11'-3	271	126	4	13'-1	1101	5724
29	18'-3	38.0	64	9	21'-0	4570	38	4	11'-3	286	133	4	13'-1	1162	6018
30	19'-3	40.0	64	9	22'-0	4787	40	4	11'-3	301	140	4	13'-1	1224	6312
31	20'-3	42.1	64	9	23'-0	5005	42	4	11'-3	316	147	4	13'-1	1285	6606
32	21'-3	44.2	64	9	24'-0	5222	44	4	11'-3	331	154	4	13'-1	1346	6899
33	22'-3	46.3	64	9	25'-0	5440	46	4	11'-3	346	161	4	13'-1	1407	7193
34	23'-3	48.4	64	9	26'-0	5658	48	4	11'-3	361	168	4	13'-1	1468	7487
35	24'-3	50.4	64	9	27'-0	5875	50	4	11'-3	376	175	4	13'-1	1529	7780
36	25'-3	52.5	64	9	28'-0	6093	52	4	11'-3	391	182	4	13'-1	1591	8075
37	26'-3	54.6	64	9	29'-0	6310	54	4	11'-3	406	189	4	13'-1	1652	8368
38	27'-3	56.7	64	9	30'-0	6528	56	4	11'-3	421	196	4	13'-1	1713	8662
39	28'-3	58.8	64	9	31'-0	6746	58	4	11'-3	436	203	4	13'-1	1774	8956
40	29'-3	60.8	64	9	32'-0	6963	60	4	11'-3	451	210	4	13'-1	1835	9249

PIER NOTES:

SEE "TEE PIER NOTES" ON RS40-003-14 FOR NOTES REGARDING APPLICATION OF THESE PIER STANDARDS.

MINIMUM CLEAR DISTANCE FROM FACE OF CONCRETE TO NEAR REINFORCING BAR SHALL BE 2 INCHES UNLESS OTHERWISE NOTED OR SHOWN.

① SEE SHEET RS40-168-14 FOR STEP REINFORCING STEEL QUANTITIES AND DETAILS.

LATEST REVISION DATE

APPROVED BY BRIDGE ENGINEER

IOWA DOT Highway Division

STANDARD DESIGN - 40' ROADWAY, 3 SPAN BRIDGES

ROLLED STEEL BEAM BRIDGES

OCTOBER, 2014

TEE PIER CAP & COLUMN DETAILS

30° SKEW

RS40-147-10

H IN FT.	℄ - ℄ ABUT. BRG.	PILING (HP10x57) NO. & LAYOUT	PILING (HP10x57) ① LRFD Pu, STRENGTH I, DES. LOAD (KIPS)	FOOTING SIZE
16 TO 18	160'-0	17A	136	4' x 8' x 28'
	180'-0	17A	145	
	200'-0	18A	144	
	220'-0	20A	146	
	240'-0	20D	142	4' x 11' x 30'
	260'-0	21A	147	
	280'-0	23B	144	4' x 14' x 30'
	300'-0	25A	143	
	320'-0	26A	146	
	340'-0	26B	147	4' x 14' x 32'
19 TO 21	160'-0	17A	140	4' x 8' x 28'
	180'-0	18A	140	
	200'-0	19A	144	
	220'-0	20C	146	4' x 11' x 28'
	240'-0	20D	146	4' x 11' x 30'
	260'-0	22A	145	
	280'-0	24A	142	4' x 14' x 30'
	300'-0	25A	147	
	320'-0	27A	146	
	340'-0	27B	146	4' x 14' x 32'
22 TO 24	160'-0	17A	145	4' x 8' x 28'
	180'-0	18A	145	
	200'-0	20A	144	
	220'-0	20D	139	4' x 11' x 30'
	240'-0	21A	145	
	260'-0	23A	145	
	280'-0	24A	145	4' x 14' x 30'
	300'-0	26A	145	
	320'-0	27B	143	4' x 14' x 32'
	340'-0	28A	145	
25 TO 27	160'-0	18A	140	4' x 8' x 28'
	180'-0	19A	144	
	200'-0	20B	145	4' x 9' x 28'
	220'-0	20D	142	4' x 11' x 30'
	240'-0	22A	143	
	260'-0	23B	143	4' x 14' x 30'
	280'-0	25A	144	
	300'-0	27A	144	
	320'-0	27B	145	4' x 14' x 32'
	340'-0	28B	144	4' x 14' x 34'
28 TO 30	160'-0	18B	141	4' x 9' x 28'
	180'-0	19B	145	
	200'-0	20C	145	4' x 11' x 28'
	220'-0	20D	145	4' x 11' x 30'
	240'-0	22A	146	
	260'-0	23B	146	4' x 14' x 30'
	280'-0	25A	146	
	300'-0	27A	146	
	320'-0	28A	144	4' x 14' x 32'
	340'-0	28B	146	4' x 14' x 34'
31 TO 33	160'-0	18B	145	4' x 9' x 28'
	180'-0	19C	146	4' x 11' x 28'
	200'-0	20D	139	4' x 11' x 30'
	220'-0	21A	144	
	240'-0	22B	144	4' x 14' x 30'
	260'-0	24A	143	
	280'-0	26A	144	
	300'-0	27B	142	4' x 14' x 32'
	320'-0	28A	145	
	340'-0	29A	145	4' x 14' x 34'
34 TO 36	160'-0	18C	145	4' x 11' x 28'
	180'-0	19D	141	4' x 11' x 30'
	200'-0	20D	141	
	220'-0	21A	146	
	240'-0	22B	146	4' x 14' x 30'
	260'-0	24A	146	
	280'-0	26A	146	
	300'-0	27B	144	4' x 14' x 32'
	320'-0	28B	144	4' x 14' x 34'
	340'-0	30A	143	

H IN FT.	℄ - ℄ ABUT. BRG.	PILING (HP10x57) NO. & LAYOUT	PILING (HP10x57) ① LRFD Pu, STRENGTH I, DES. LOAD (KIPS)	FOOTING SIZE
37 TO 40	160'-0	19C	144	4' x 11' x 28'
	180'-0	19D	145	4' x 11' x 30'
	200'-0	20D	145	
	220'-0	22A	145	
	240'-0	23B	145	4' x 14' x 30'
	260'-0	25A	145	
	280'-0	26B	143	4' x 14' x 32'
	300'-0	27B	146	
	320'-0	28B	147	4' x 14' x 34'
	340'-0	30A	146	

FOOTING SIZE	REINFORCING STEEL (ONE FOOTING) BAR	NO., SIZE & SPACING	LENGTH	WEIGHT (LB.)	TOTAL WEIGHT (LB.)	STRUCTURAL CONCRETE (CY)
4' x 8' x 28'	d2	64 - #9 AS SHOWN	9'-1	1977	3294	33.2
	f1	28 - #5 @ 1'-0	7'-8	224		
	f2	8 - #5 @ 1'-0	27'-8	231		
	g1	28 - #6 @ 1'-0	7'-8	322		
	g2	13 - #6 @ 0'-7½	27'-8	540		
4' x 9' x 28'	d2	64 - #9 AS SHOWN	9'-1	1977	3486	37.3
	f1	28 - #5 @ 1'-0	8'-8	253		
	f2	9 - #5 @ 1'-0	27'-8	260		
	g1	35 - #6 @ 0'-9½	8'-8	456		
	g2	13 - #6 @ 0'-8½	27'-8	540		
4' x 11' x 28'	d2	64 - #9 AS SHOWN	9'-1	1977	4029	45.6
	f1	28 - #5 @ 1'-0	10'-8	312		
	f2	11 - #5 @ 1'-0	27'-8	317		
	g1	31 - #8 @ 0'-11	10'-8	883		
	g2	13 - #6 @ 0'-10½	27'-8	540		
4' x 11' x 30'	d2	64 - #9 AS SHOWN	9'-1	1977	4829	48.9
	f1	30 - #5 @ 1'-0	10'-8	334		
	f2	11 - #5 @ 1'-0	29'-8	340		
	g1	32 - #8 @ 0'-11	10'-8	911		
	g2	16 - #8 @ 0'-8	29'-8	1267		
4' x 14' x 30'	d2	64 - #9 AS SHOWN	9'-1	1977	5778	62.2
	f1	30 - #5 @ 1'-0	13'-8	428		
	f2	14 - #5 @ 1'-0	29'-8	433		
	g1	36 - #9 @ 0'-10	13'-8	1673		
	g2	16 - #8 @ 0'-10½	29'-8	1267		
4' x 14' x 32'	d2	64 - #9 AS SHOWN	9'-1	1977	6567	66.4
	f1	32 - #5 @ 1'-0	13'-8	456		
	f2	14 - #5 @ 1'-0	31'-8	462		
	g1	39 - #9 @ 0'-9½	13'-8	1812		
	g2	22 - #8 @ 0'-7½	31'-8	1860		
4' x 14' x 34'	d2	64 - #9 AS SHOWN	9'-1	1977	6837	70.5
	f1	34 - #5 @ 1'-0	13'-8	485		
	f2	14 - #5 @ 1'-0	33'-8	492		
	g1	41 - #9 @ 0'-10	13'-8	1905		
	g2	22 - #8 @ 0'-7½	33'-8	1978		

① NOTE: PU, STRENGTH I DESIGN LOAD (KIPS) IS NOT THE VALUE USED IN THE FIELD FOR DRIVING PILES.

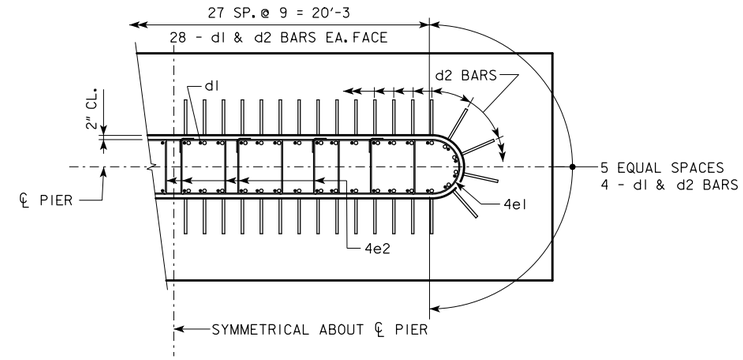

d2 BAR LAYOUT

(SEE SECTION A-A ON SHEET RS40-146-14.)

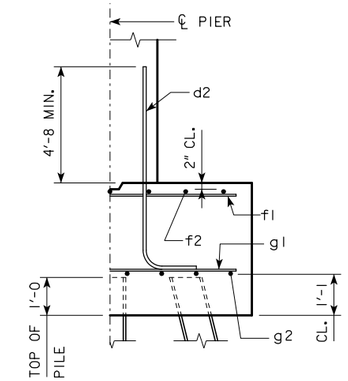

TYPICAL SECTION

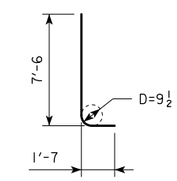

d2

NOTE: D = PIN DIAMETER.
DIMENSIONS ARE OUT TO OUT.

NOTE: THE REINFORCING STEEL QUANTITY IS TO BE INCLUDED ON THE SUMMARY QUANTITIES SHEET IN THE PLAN.

NOTE: THE CONCRETE QUANTITY IS TO BE INCLUDED ON THE SUMMARY QUANTITIES SHEET IN THE PLAN.

NOTE: THE PILE TYPE IS TO BE INCLUDED ON THE SUMMARY QUANTITIES SHEET IN THE PLAN.

FOOTING NOTES:

THESE FOOTINGS ARE DESIGNED AND DETAILED TO BE USED WITH THE CAP AND COLUMN DETAILS OF THE TEE PIERS AS SHOWN ON SHEET RS40-146-14.

BATTER PILES IN EXTERIOR ROWS 1:4 IN THE DIRECTION SHOWN.

STEEL PILING USED AS POINT BEARING SHALL HAVE A MINIMUM DISTANCE OF APPROXIMATELY 10 FEET FROM BOTTOM OF FOOTING TO TOP OF BEARING ROCK. THE PILE LAYOUTS ARE SUCH THAT THE DISTANCE CENTER TO CENTER OF ADJACENT PILING SHALL NOT EXCEED 8'-0.

PIER PILES SHALL BE DRIVEN TO VALUES SHOWN IN DESIGN PLANS.

LATEST REVISION DATE

APPROVED BY BRIDGE ENGINEER

IOWA DOT Highway Division

STANDARD DESIGN - 40' ROADWAY, 3 SPAN BRIDGES

ROLLED STEEL BEAM BRIDGES

OCTOBER, 2014

TEE PIER-HP10x57 SRL-1
STEEL PILE FOOTINGS
30° SKEW - SHEET 1

RS40-148-14

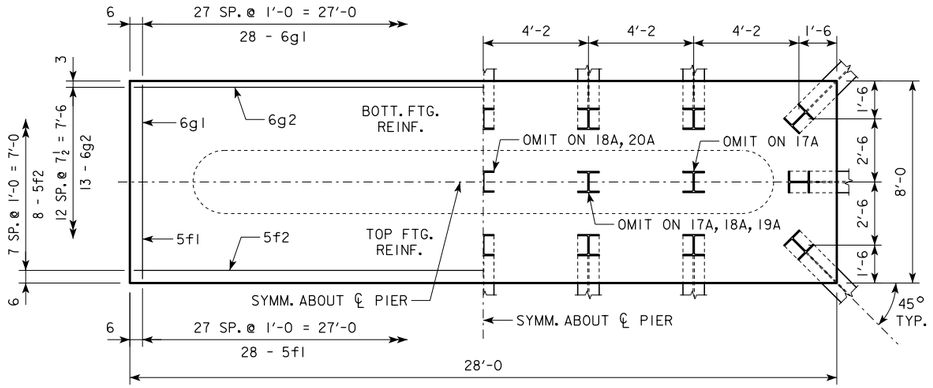

4'-0 × 8'-0 × 28'-0 FOR 17A, 18A, 19A & 20A

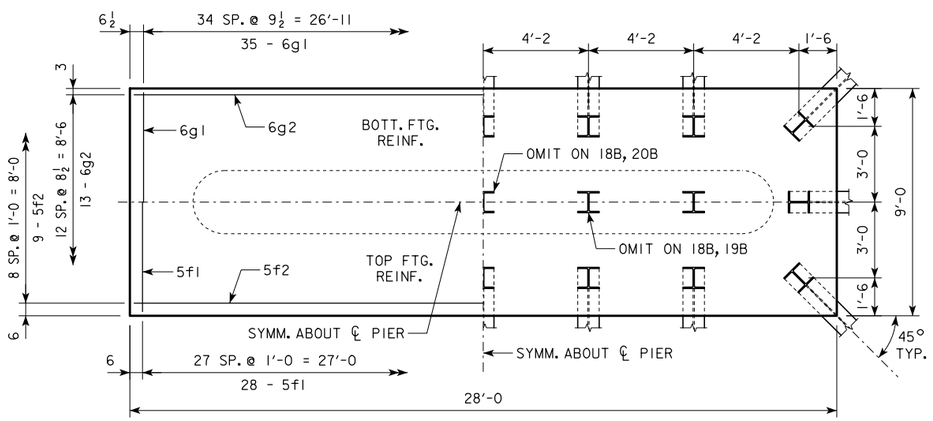

4'-0 × 9'-0 × 28'-0 FOR 18B, 19B & 20B

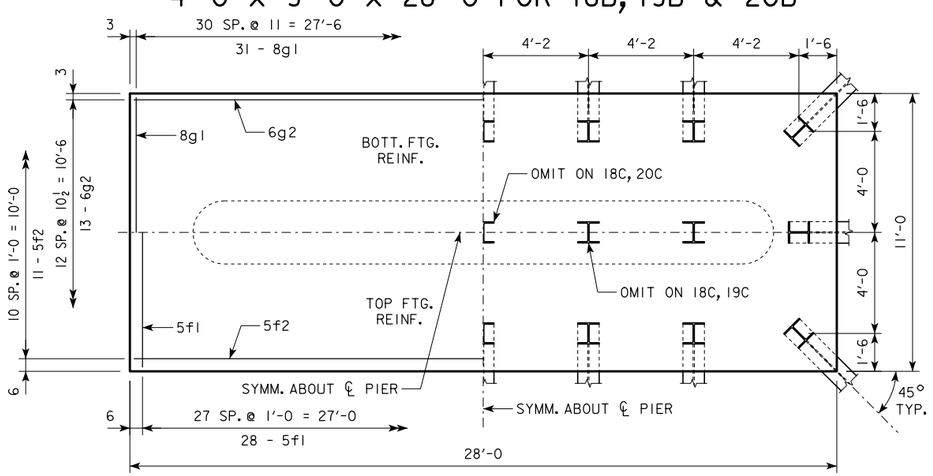

4'-0 × 11'-0 × 28'-0 FOR 18C, 19C & 20C

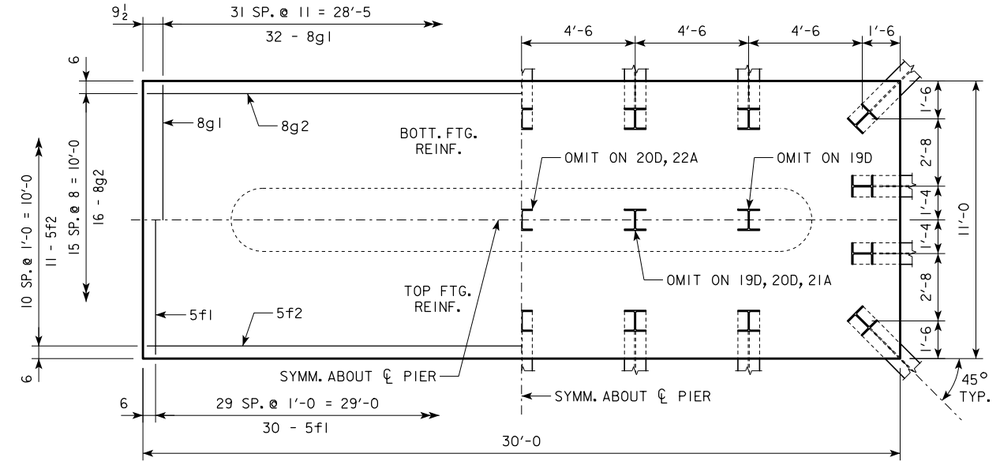

4'-0 × 11'-0 × 30'-0 FOR 19D, 20D, 21A, 22A & 23A

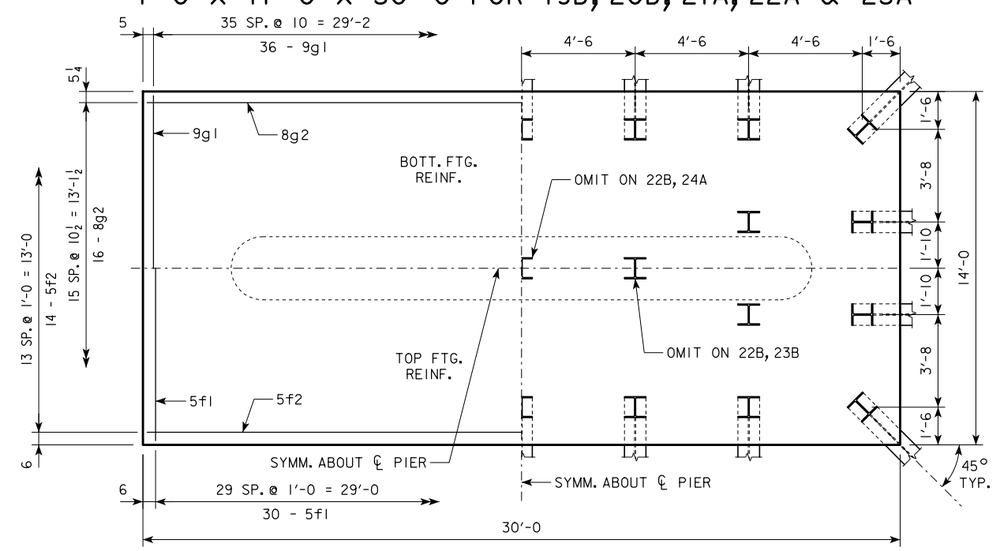

4'-0 × 14'-0 × 30'-0 FOR 22B, 23B, 24A & 25A

NOTE:
SEE SHEET RS40-148-14 FOR FOOTING NOTES.

LATEST REVISION DATE

APPROVED BY BRIDGE ENGINEER

IOWA DOT Highway Division

STANDARD DESIGN - 40' ROADWAY, 3 SPAN BRIDGES

ROLLED STEEL BEAM BRIDGES

OCTOBER, 2014

TEE PIER-HP10x57 SRL-I
STEEL PILE FOOTINGS
30° SKEW - SHEET 2

RS40-149-14

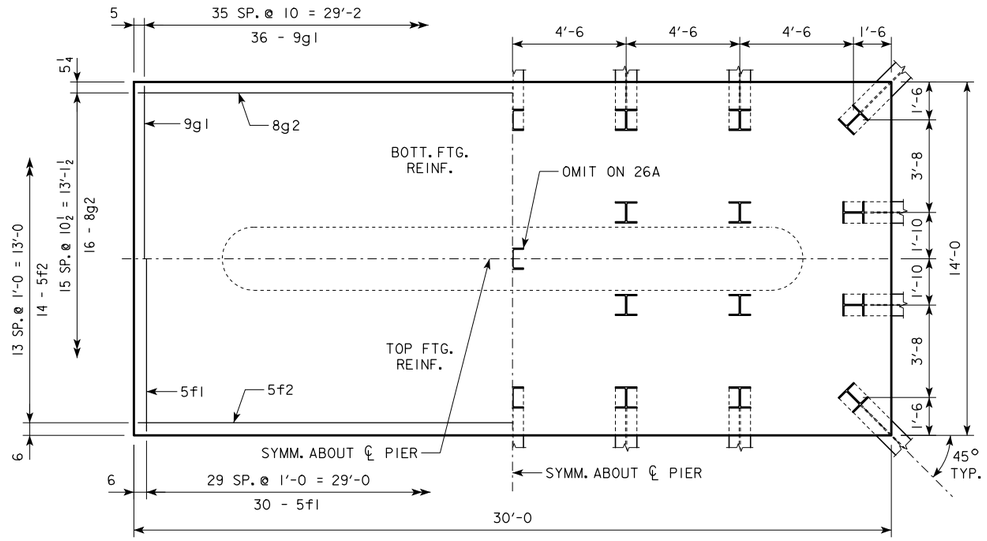

4'-0 x 14'-0 x 30'-0 FOR 26A & 27A

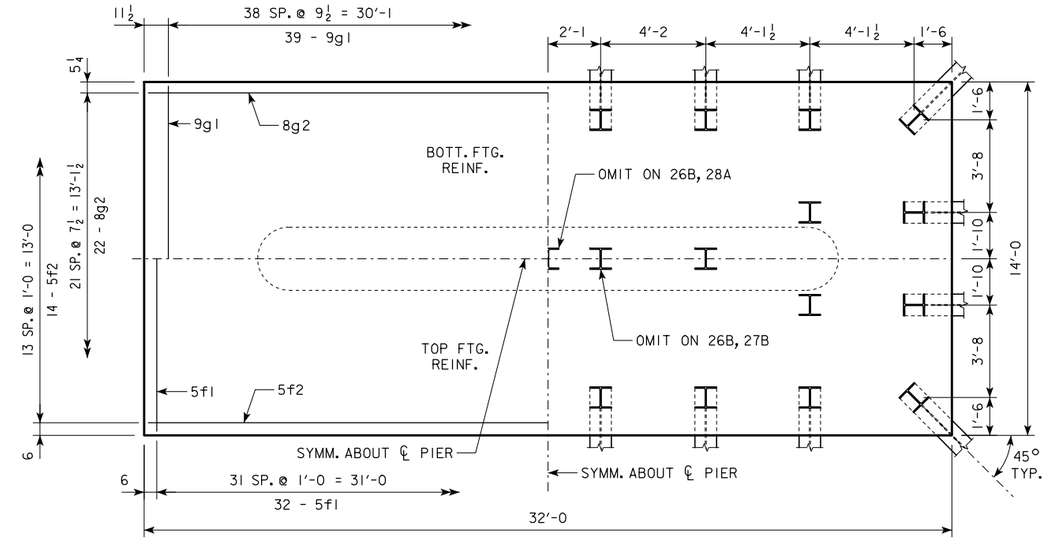

4'-0 x 14'-0 x 32'-0 FOR 26B, 27B & 28A

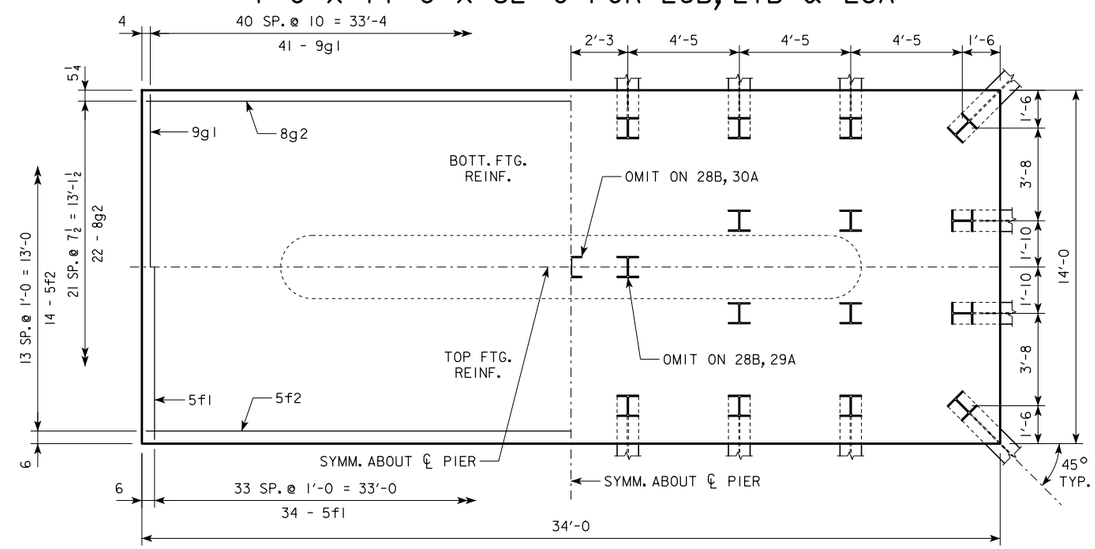

4'-0 x 14'-0 x 34'-0 FOR 28B, 29A & 30A

NOTE:
SEE SHEET RS40-148-14 FOR FOOTING NOTES.

LATEST REVISION DATE

APPROVED BY BRIDGE ENGINEER

IOWA DOT Highway Division

STANDARD DESIGN - 40' ROADWAY, 3 SPAN BRIDGES

ROLLED STEEL BEAM BRIDGES

OCTOBER, 2014

TEE PIER-HP10x57 SRL-I
STEEL PILE FOOTINGS
30° SKEW - SHEET 3

RS40-150-14

H IN FT.	℄ - ℄ ABUT. BRG.	PILING (HP10x57) NO. & LAYOUT	PILING (HP10x57) (1) LRFD Pu, STRENGTH I, DES. LOAD (KIPS)	FOOTING SIZE
16 TO 18	160'-0	10A	215	4' x 8' x 27'
	180'-0	11A	216	
	200'-0	12A	211	
	220'-0	13A	218	
	240'-0	14A	216	4' x 10' x 27'
	260'-0	14B	219	4' x 11' x 27'
	280'-0	16A	212	
	300'-0	16C	210	4' x 12' x 29'
	320'-0	17B	212	
	340'-0	18A	211	
19 TO 21	160'-0	11A	210	4' x 8' x 27'
	180'-0	12A	206	
	200'-0	12B	214	4' x 9' x 27'
	220'-0	13B	218	4' x 10' x 27'
	240'-0	14B	210	4' x 11' x 27'
	260'-0	15A	215	
	280'-0	16A	217	
	300'-0	16C	215	4' x 12' x 29'
	320'-0	17B	217	
	340'-0	18A	216	
22 TO 24	160'-0	11B	213	4' x 9' x 27'
	180'-0	12B	208	
	200'-0	12C	218	4' x 10' x 27'
	220'-0	14A	213	
	240'-0	14B	215	4' x 11' x 27'
	260'-0	15A	220	
	280'-0	16C	207	4' x 12' x 29'
	300'-0	16C	219	
	320'-0	18A	211	
	340'-0	19A	213	
25 TO 27	160'-0	11C	217	4' x 10' x 27'
	180'-0	12C	212	
	200'-0	13B	213	
	220'-0	14A	218	
	240'-0	15A	211	4' x 11' x 27'
	260'-0	16A	212	
	280'-0	16C	211	4' x 12' x 29'
	300'-0	17B	214	
	320'-0	18A	215	
	340'-0	19A	216	
28 TO 30	160'-0	12C	204	4' x 10' x 27'
	180'-0	12C	217	
	200'-0	13B	218	
	220'-0	14B	210	4' x 11' x 27'
	240'-0	15A	215	
	260'-0	16A	216	
	280'-0	16C	215	4' x 12' x 29'
	300'-0	17B	218	
	320'-0	18A	218	
	340'-0	19B	218	4' x 13' x 29'
31 TO 33	160'-0	12C	209	4' x 10' x 27'
	180'-0	12D	217	4' x 11' x 27'
	200'-0	13C	218	
	220'-0	14B	214	
	240'-0	15A	219	
	260'-0	16B	218	4' x 12' x 27'
	280'-0	16C	218	4' x 12' x 29'
	300'-0	18A	211	
	320'-0	19A	214	
	340'-0	20A	214	4' x 13' x 29'
34 TO 36	160'-0	12D	209	4' x 11' x 27'
	180'-0	13C	211	
	200'-0	14B	204	
	220'-0	14B	218	
	240'-0	16A	211	
	260'-0	17A	214	4' x 12' x 27'
	280'-0	17B	213	4' x 12' x 29'
	300'-0	18A	214	
	320'-0	19B	215	4' x 13' x 29'
	340'-0	20A	216	

H IN FT.	℄ - ℄ ABUT. BRG.	PILING (HP10x57) NO. & LAYOUT	PILING (HP10x57) (1) LRFD Pu, STRENGTH I, DES. LOAD (KIPS)	FOOTING SIZE
37 TO 40	160'-0	12D	215	4' x 11' x 27'
	180'-0	14B	199	
	200'-0	14B	209	
	220'-0	15A	214	
	240'-0	16A	216	
	260'-0	17A	218	4' x 12' x 27'
	280'-0	17B	217	4' x 12' x 29'
	300'-0	18A	217	
	320'-0	19B	219	4' x 13' x 29'
	340'-0	20B	218	4' x 14' x 29'

FOOTING SIZE	REINFORCING STEEL (ONE FOOTING) BAR	NO., SIZE & SPACING	LENGTH	WEIGHT (LB.)	TOTAL WEIGHT (LB.)	STRUCTURAL CONCRETE (CY)
4' x 8' x 27'	d2	64 - #9 AS SHOWN	9'-1	1977	3248	32.0
	f1	27 - #5 @ 1'-0	7'-8	216		
	f2	8 - #5 @ 1'-0	26'-8	223		
	g1	27 - #6 @ 1'-0	7'-8	311		
	g2	13 - #6 @ 0'-7½	26'-8	521		
4' x 9' x 27'	d2	64 - #9 AS SHOWN	9'-1	1977	3370	36.0
	f1	27 - #5 @ 1'-0	8'-8	244		
	f2	9 - #5 @ 1'-0	26'-8	250		
	g1	29 - #6 @ 0'-11	8'-8	378		
	g2	13 - #6 @ 0'-8½	26'-8	521		
4' x 10' x 27'	d2	64 - #9 AS SHOWN	9'-1	1977	3601	40.0
	f1	27 - #5 @ 1'-0	9'-8	272		
	f2	10 - #5 @ 1'-0	26'-8	278		
	g1	28 - #7 @ 0'-11½	9'-8	553		
	g2	13 - #6 @ 0'-9½	26'-8	521		
4' x 11' x 27'	d2	64 - #9 AS SHOWN	9'-1	1977	4083	44.0
	f1	27 - #5 @ 1'-0	10'-8	300		
	f2	11 - #5 @ 1'-0	26'-8	306		
	g1	27 - #9 @ 1'-0	10'-8	979		
	g2	13 - #6 @ 0'-10½	26'-8	521		
4' x 12' x 27'	d2	64 - #9 AS SHOWN	9'-1	1977	4391	48.0
	f1	27 - #5 @ 1'-0	11'-8	329		
	f2	12 - #5 @ 1'-0	26'-8	334		
	g1	31 - #9 @ 0'-10½	11'-8	1230		
	g2	13 - #6 @ 0'-11½	26'-8	521		
4' x 12' x 29'	d2	64 - #9 AS SHOWN	9'-1	1977	5452	51.6
	f1	29 - #5 @ 1'-0	11'-8	353		
	f2	12 - #5 @ 1'-0	28'-8	359		
	g1	33 - #9 @ 0'-10½	11'-8	1309		
	g2	19 - #8 @ 0'-7½	28'-8	1454		
4' x 13' x 29'	d2	64 - #9 AS SHOWN	9'-1	1977	5787	55.9
	f1	29 - #5 @ 1'-0	12'-8	383		
	f2	13 - #5 @ 1'-0	28'-8	389		
	g1	35 - #9 @ 0'-10	12'-8	1507		
	g2	20 - #8 @ 0'-7½	28'-8	1531		
4' x 14' x 29'	d2	64 - #9 AS SHOWN	9'-1	1977	5966	60.1
	f1	29 - #5 @ 1'-0	13'-8	413		
	f2	14 - #5 @ 1'-0	28'-8	419		
	g1	35 - #9 @ 0'-10	13'-8	1626		
	g2	20 - #8 @ 0'-8½	28'-8	1531		

(1) NOTE: PU, STRENGTH I DESIGN LOAD (KIPS) IS NOT THE VALUE USED IN THE FIELD FOR DRIVING PILES.

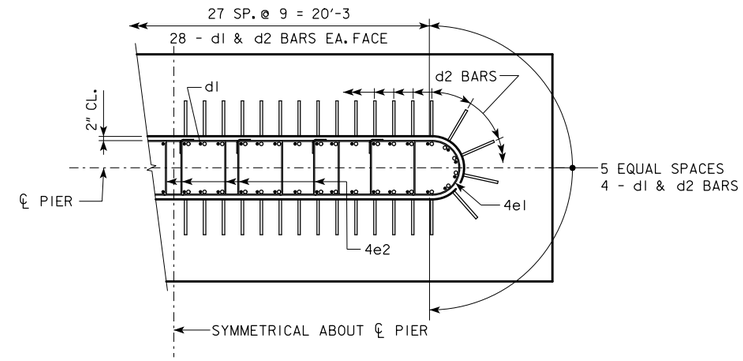

d2 BAR LAYOUT

(SEE SECTION A-A ON SHEET RS40-146-14.)

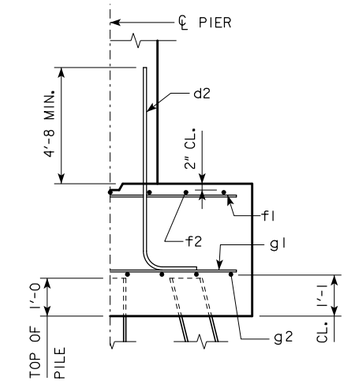

TYPICAL SECTION

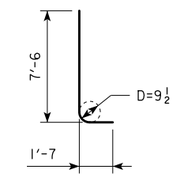

d2

NOTE: D = PIN DIAMETER.
DIMENSIONS ARE OUT TO OUT.

NOTE: THE REINFORCING STEEL QUANTITY IS TO BE INCLUDED ON THE SUMMARY QUANTITIES SHEET IN THE PLAN.

NOTE: THE CONCRETE QUANTITY IS TO BE INCLUDED ON THE SUMMARY QUANTITIES SHEET IN THE PLAN.

NOTE: THE PILE TYPE IS TO BE INCLUDED ON THE SUMMARY QUANTITIES SHEET IN THE PLAN.

FOOTING NOTES:

THESE FOOTINGS ARE DESIGNED AND DETAILED TO BE USED WITH THE CAP AND COLUMN DETAILS OF THE TEE PIERS AS SHOWN ON SHEET RS40-146-14.

BATTER PILES IN EXTERIOR ROWS 1:4 IN THE DIRECTION SHOWN.

STEEL PILING USED AS POINT BEARING SHALL HAVE A MINIMUM DISTANCE OF APPROXIMATELY 10 FEET FROM BOTTOM OF FOOTING TO TOP OF BEARING ROCK. THE PILE LAYOUTS ARE SUCH THAT THE DISTANCE CENTER TO CENTER OF ADJACENT PILING SHALL NOT EXCEED 8'-0.

PIER PILES SHALL BE DRIVEN TO VALUES SHOWN IN DESIGN PLANS.

LATEST REVISION DATE

APPROVED BY BRIDGE ENGINEER

IOWA DOT Highway Division

STANDARD DESIGN - 40' ROADWAY, 3 SPAN BRIDGES

ROLLED STEEL BEAM BRIDGES

OCTOBER, 2014

TEE PIER-HP10x57 SRL-2
STEEL PILE FOOTINGS
30° SKEW - SHEET 1

RS40-151-14

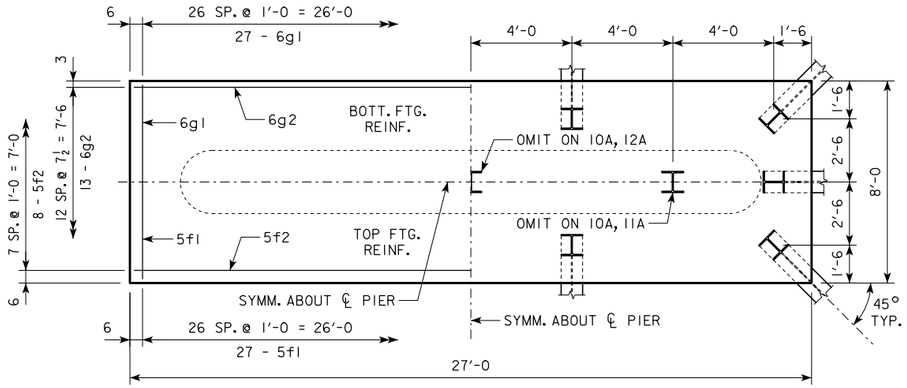

4'-0 x 8'-0 x 27'-0 FOR 10A, 11A, 12A & 13A

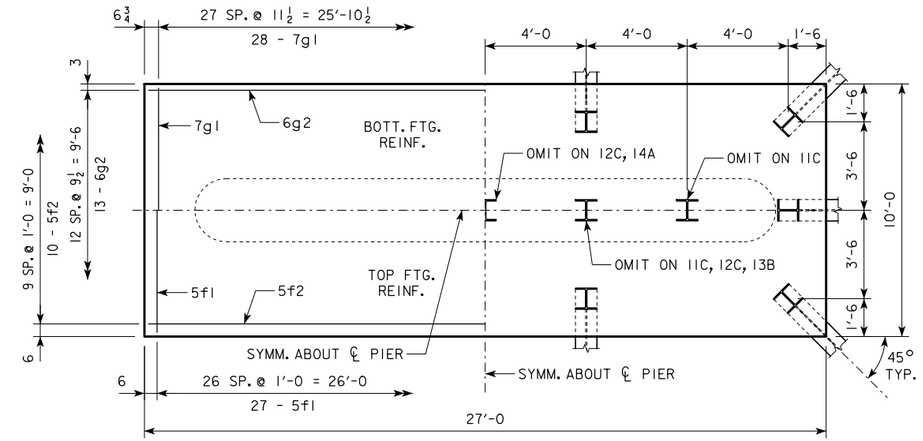

4'-0 x 10'-0 x 27'-0 FOR 11C, 12C, 13B & 14A

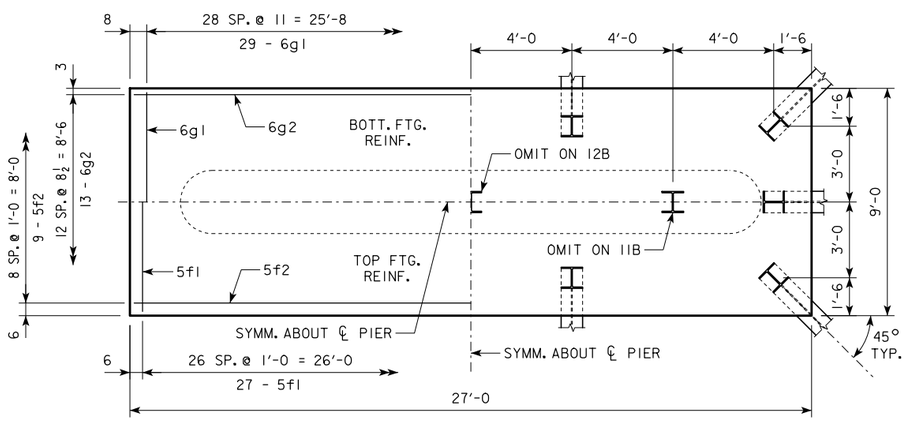

4'-0 x 9'-0 x 27'-0 FOR 11B & 12B

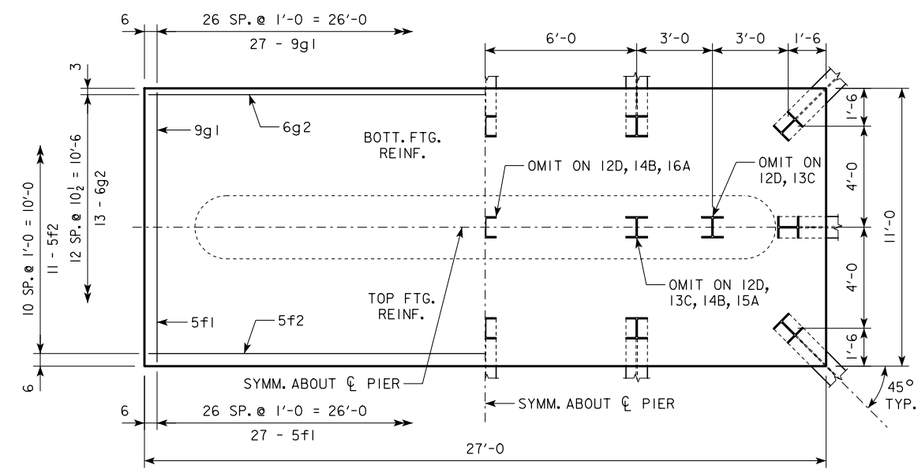

4'-0 x 11'-0 x 27'-0 FOR 12D, 13C, 14B, 15A & 16A

NOTE:
SEE SHEET RS40-151-14 FOR FOOTING NOTES.

LATEST REVISION DATE

APPROVED BY BRIDGE ENGINEER

IOWA DOT Highway Division

STANDARD DESIGN - 40' ROADWAY, 3 SPAN BRIDGES

ROLLED STEEL BEAM BRIDGES

OCTOBER, 2014

TEE PIER-HP10x57 SRL-2
STEEL PILE FOOTINGS
30° SKEW - SHEET 2

RS40-152-14

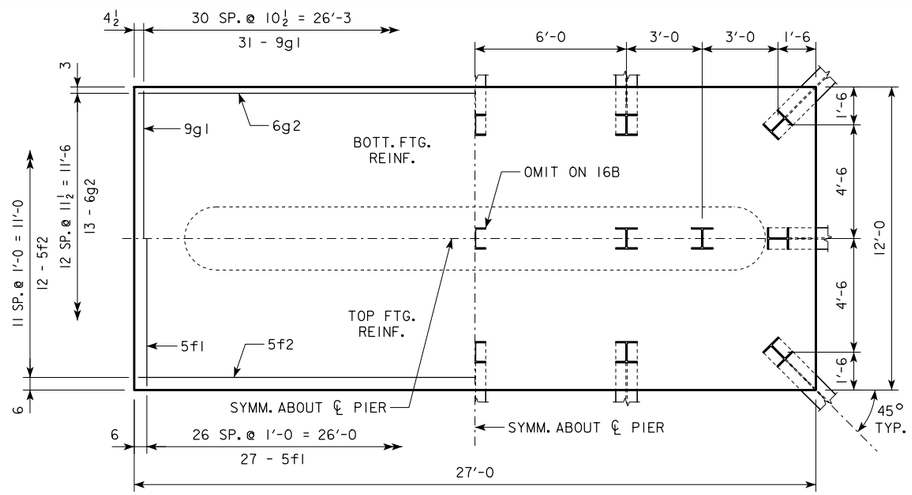

4'-0 x 12'-0 x 27'-0 FOR 16B & 17A

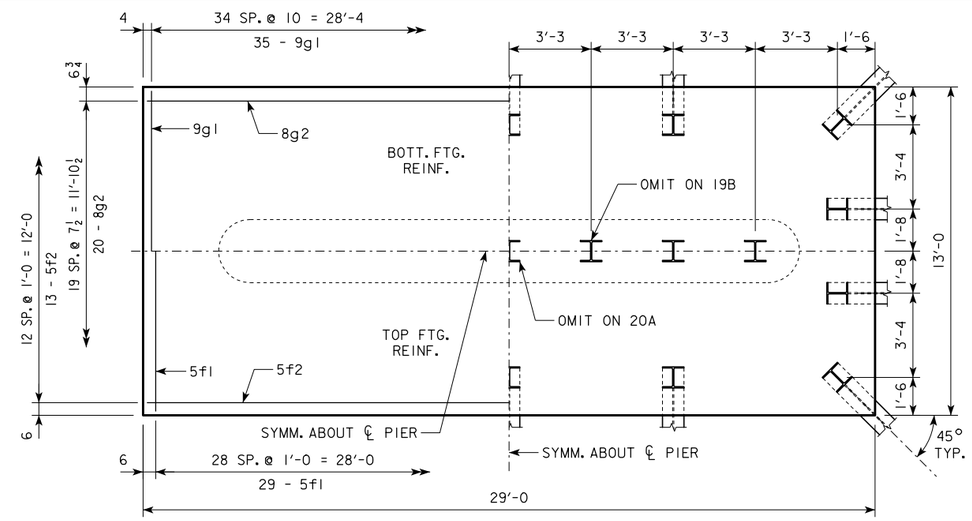

4'-0 x 13'-0 x 29'-0 FOR 19B & 20A

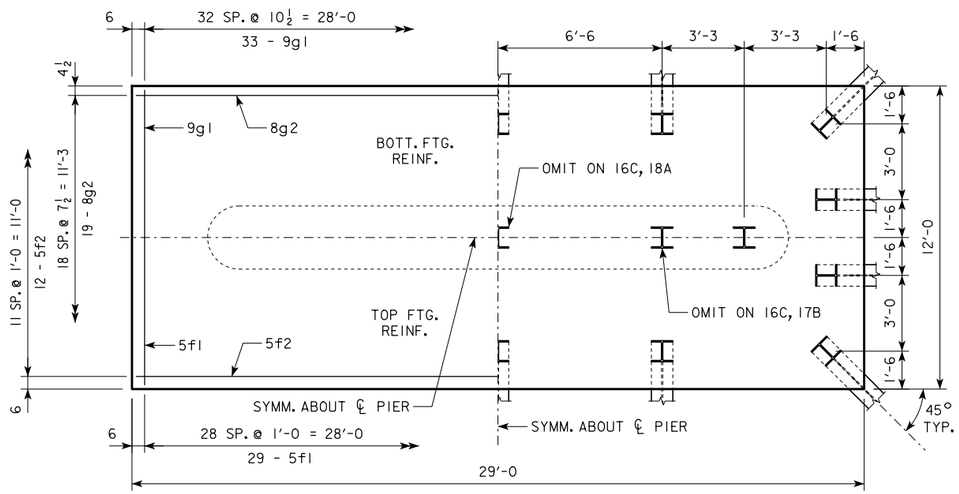

4'-0 x 12'-0 x 29'-0 FOR 16C, 17B, 18A & 19A

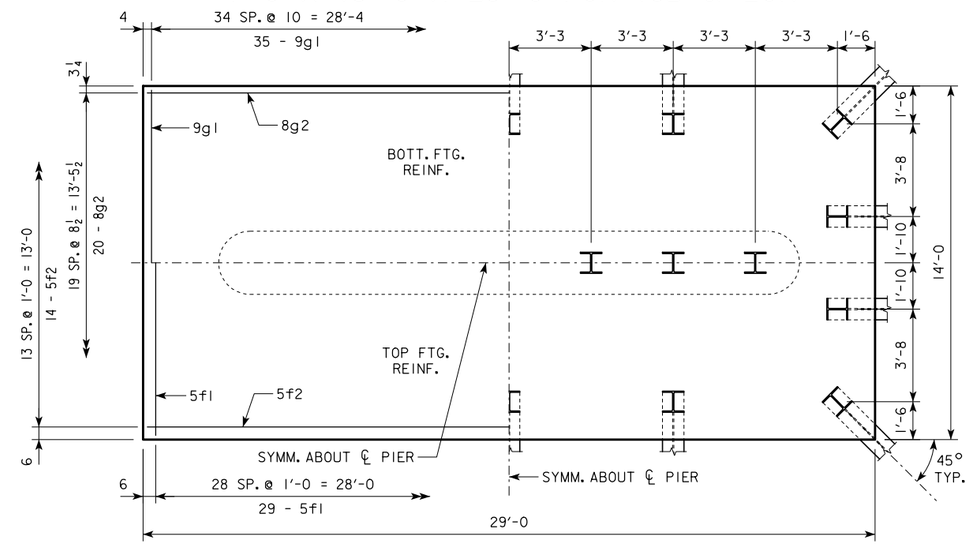

4'-0 x 14'-0 x 29'-0 FOR 20B

NOTE:
SEE SHEET RS40-151-14 FOR FOOTING NOTES.

LATEST REVISION DATE

APPROVED BY BRIDGE ENGINEER

IOWA DOT Highway Division

STANDARD DESIGN - 40' ROADWAY, 3 SPAN BRIDGES

ROLLED STEEL BEAM BRIDGES

OCTOBER, 2014

TEE PIER-HP10x57 SRL-2
STEEL PILE FOOTINGS
30° SKEW - SHEET 3

RS40-153-14

H IN FT.	℄ - ℄ ABUT. BRG.	FOOTING SIZE
16 TO 18	160′-0	4′ x 8′ x 28′
	180′-0	
	200′-0	
	220′-0	4′ x 9′ x 28′
	240′-0	4′ x 9′ x 30′
	260′-0	
	280′-0	4′ x 10′ x 30′
	300′-0	4′ x 10′ x 32′
	320′-0	
	340′-0	4′ x 11′ x 32′
19 TO 21	160′-0	4′ x 8′ x 28′
	180′-0	
	200′-0	4′ x 9′ x 28′
	220′-0	
	240′-0	4′ x 9′ x 30′
	260′-0	4′ x 10′ x 30′
	280′-0	
	300′-0	4′ x 10′ x 32′
	320′-0	4′ x 11′ x 32′
	340′-0	
22 TO 24	160′-0	4′ x 8′ x 28′
	180′-0	4′ x 9′ x 28′
	200′-0	
	220′-0	4′ x 9′ x 30′
	240′-0	
	260′-0	4′ x 10′ x 30′
	280′-0	4′ x 10′ x 32′
	300′-0	
	320′-0	4′ x 11′ x 32′
	340′-0	
25 TO 27	160′-0	4′ x 8′ x 28′
	180′-0	4′ x 9′ x 28′
	200′-0	
	220′-0	4′ x 9′ x 30′
	240′-0	4′ x 10′ x 30′
	260′-0	
	280′-0	4′ x 10′ x 32′
	300′-0	4′ x 11′ x 32′
	320′-0	
	340′-0	
28 TO 30	160′-0	4′ x 9′ x 28′
	180′-0	
	200′-0	
	220′-0	4′ x 9′ x 30′
	240′-0	4′ x 10′ x 30′
	260′-0	
	280′-0	4′ x 10′ x 32′
	300′-0	4′ x 11′ x 32′
	320′-0	
	340′-0	4′ x 11′ x 34′
31 TO 33	160′-0	4′ x 9′ x 28′
	180′-0	
	200′-0	4′ x 9′ x 30′
	220′-0	
	240′-0	4′ x 10′ x 30′
	260′-0	
	280′-0	4′ x 10′ x 32′
	300′-0	4′ x 11′ x 32′
	320′-0	
	340′-0	4′ x 11′ x 34′
34 TO 36	160′-0	4′ x 9′ x 28′
	180′-0	
	200′-0	4′ x 9′ x 30′
	220′-0	4′ x 10′ x 30′
	240′-0	
	260′-0	4′ x 10′ x 32′
	280′-0	
	300′-0	4′ x 11′ x 32′
	320′-0	
	340′-0	4′ x 11′ x 34′

H IN FT.	℄ - ℄ ABUT. BRG.	FOOTING SIZE
37 TO 40	160′-0	4′ x 9′ x 28′
	180′-0	4′ x 9′ x 30′
	200′-0	
	220′-0	4′ x 10′ x 30′
	240′-0	
	260′-0	4′ x 10′ x 32′
	280′-0	4′ x 11′ x 32′
	300′-0	
	320′-0	4′ x 11′ x 34′
	340′-0	

FOOTING SIZE	REINFORCING STEEL (ONE FOOTING)					STRUCTURAL CONCRETE (CY)
	BAR	NO., SIZE & SPACING	LENGTH	WEIGHT (LB.)	TOTAL WEIGHT (LB.)	
4′ x 8′ x 28′	d2	64 - #9 AS SHOWN	9′-11	2158	3267	33.2
	f1	28 - #5 @ 1′-0	7′-8	224		
	f2	8 - #5 @ 1′-0	27′-8	231		
	g1	28 - #6 @ 1′-0	7′-8	322		
	g2	8 - #6 @ 1′-0	27′-8	332		
4′ x 9′ x 28′	d2	64 - #9 AS SHOWN	9′-11	2158	3462	37.3
	f1	28 - #5 @ 1′-0	8′-8	253		
	f2	9 - #5 @ 1′-0	27′-8	260		
	g1	32 - #6 @ 0′-10½	8′-8	417		
	g2	9 - #6 @ 1′-0	27′-8	374		
4′ x 9′ x 30′	d2	64 - #9 AS SHOWN	9′-11	2158	3843	40.0
	f1	30 - #5 @ 1′-0	8′-8	271		
	f2	9 - #5 @ 1′-0	29′-8	278		
	g1	36 - #6 @ 0′-10	8′-8	469		
	g2	11 - #7 @ 0′-10	29′-8	667		
4′ x 10′ x 30′	d2	64 - #9 AS SHOWN	9′-11	2158	4208	44.4
	f1	30 - #5 @ 1′-0	9′-8	302		
	f2	10 - #5 @ 1′-0	29′-8	309		
	g1	36 - #7 @ 0′-10	9′-8	711		
	g2	12 - #7 @ 0′-10	29′-8	728		
4′ x 10′ x 32′	d2	64 - #9 AS SHOWN	9′-11	2158	4850	47.4
	f1	32 - #5 @ 1′-0	9′-8	323		
	f2	10 - #5 @ 1′-0	31′-8	330		
	g1	39 - #7 @ 0′-9½	9′-8	771		
	g2	15 - #8 @ 0′-8	31′-8	1268		
4′ x 11′ x 32′	d2	64 - #9 AS SHOWN	9′-11	2158	5312	52.1
	f1	32 - #5 @ 1′-0	10′-8	356		
	f2	11 - #5 @ 1′-0	31′-8	363		
	g1	38 - #8 @ 0′-10	10′-8	1082		
	g2	16 - #8 @ 0′-8	31′-8	1353		
4′ x 11′ x 34′	d2	64 - #9 AS SHOWN	9′-11	2158	6146	55.4
	f1	34 - #5 @ 1′-0	10′-8	378		
	f2	11 - #5 @ 1′-0	33′-8	386		
	g1	42 - #8 @ 0′-9½	10′-8	1196		
	g2	14 - #10 @ 0′-9½	33′-8	2028		

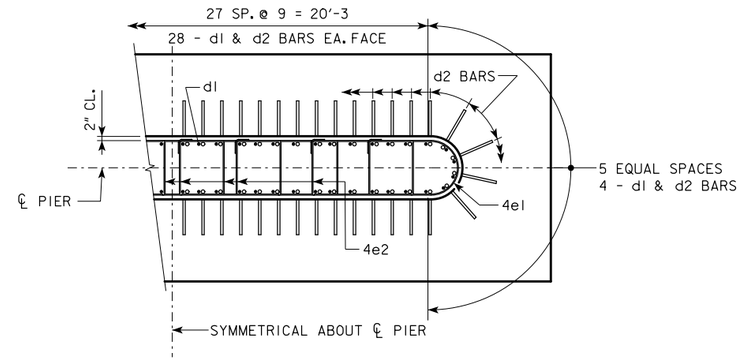

d2 LAYOUT

(SEE SECTION A-A ON SHEET RS40-146-14.)

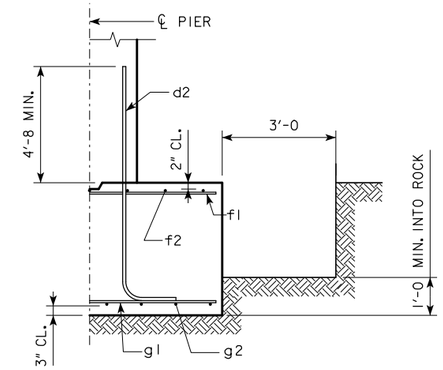

TYPICAL SECTION

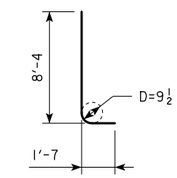

d2

NOTE: D = PIN DIAMETER.
DIMENSIONS ARE OUT TO OUT.

NOTE: THE REINFORCING STEEL QUANTITY IS TO BE INCLUDED ON THE SUMMARY QUANTITIES SHEET IN THE PLAN.

NOTE: THE CONCRETE QUANTITY IS TO BE INCLUDED ON THE SUMMARY QUANTITIES SHEET IN THE PLAN.

FOOTING NOTES:

THESE SPREAD FOOTINGS ARE DESIGNED AND DETAILED TO BE USED WITH THE CAP AND COLUMN DETAILS OF THE TEE PIERS AS SHOWN ON SHEET RS40-146-14.

THESE SPREAD FOOTINGS SHALL EXTEND AT LEAST 12 INCHES INTO SUITABLE FOUNDATION ROCK AND THE LAST 12 INCHES OF ROCK EXCAVATION SHALL BE TO NEAT LINES OF MASONRY. THE FOUNDATION ROCK SHALL HAVE A MINIMUM LRFD NOMINAL BEARING RESISTANCE OF 30 KIPS PER SQUARE FOOT (ALLOWABLE BEARING VALUE OF AT LEAST 10 KIPS PER SQUARE FOOT).

LATEST REVISION DATE

APPROVED BY BRIDGE ENGINEER

IOWA DOT Highway Division

STANDARD DESIGN - 40′ ROADWAY, 3 SPAN BRIDGES

ROLLED STEEL BEAM BRIDGES

OCTOBER, 2014

TEE PIER - SPREAD FOOTINGS

30° SKEW - SHEET 1

RS40-154-14

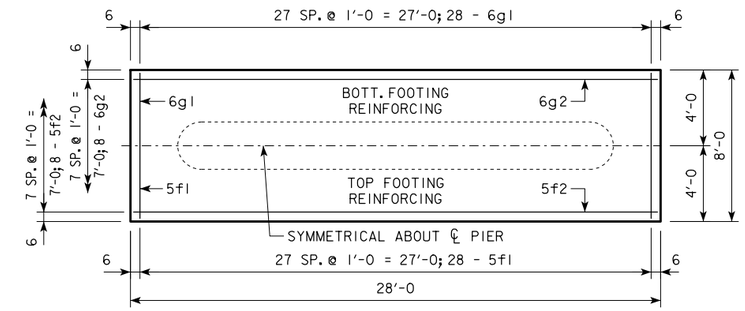

4'-0 x 8'-0 x 28'-0

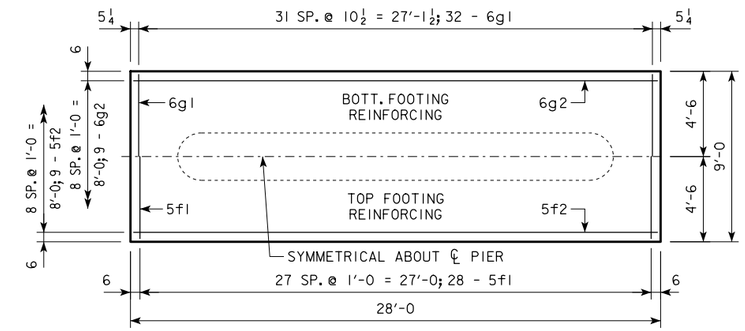

4'-0 x 9'-0 x 28'-0

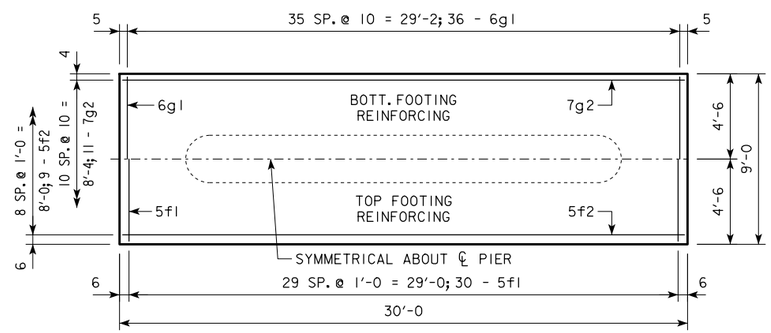

4'-0 x 9'-0 x 30'-0

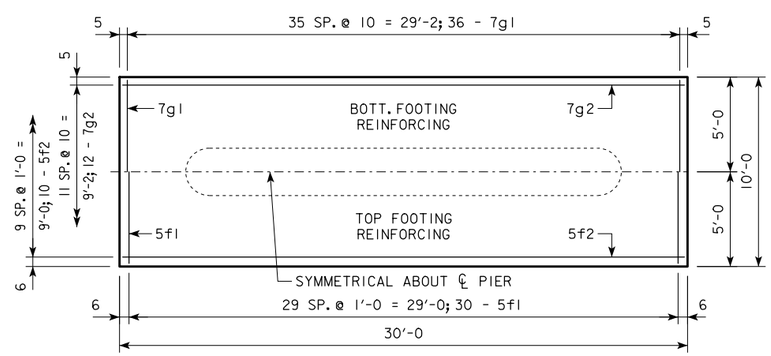

4'-0 x 10'-0 x 30'-0

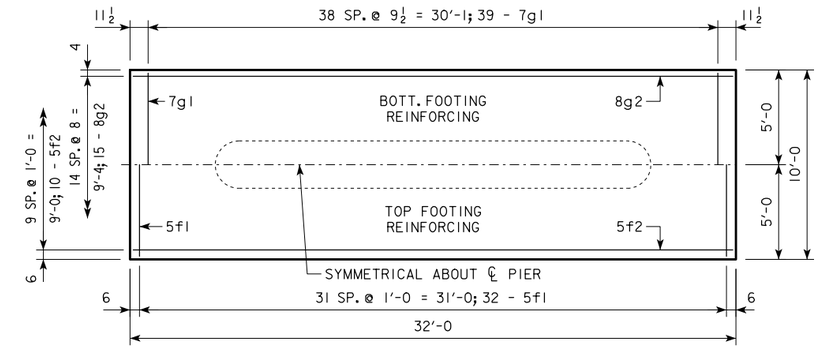

4'-0 x 10'-0 x 32'-0

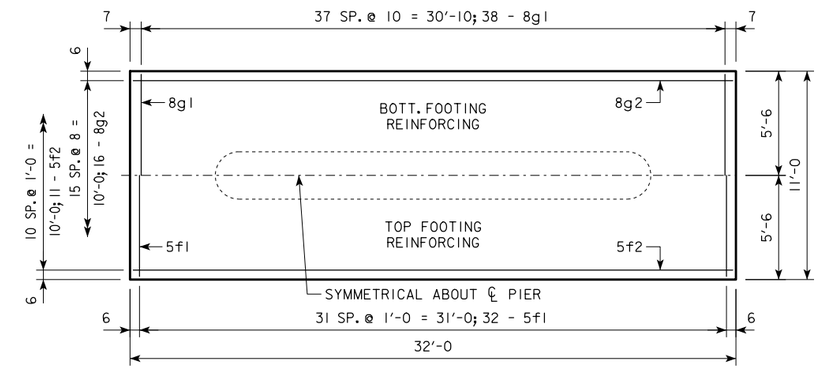

4'-0 x 11'-0 x 32'-0

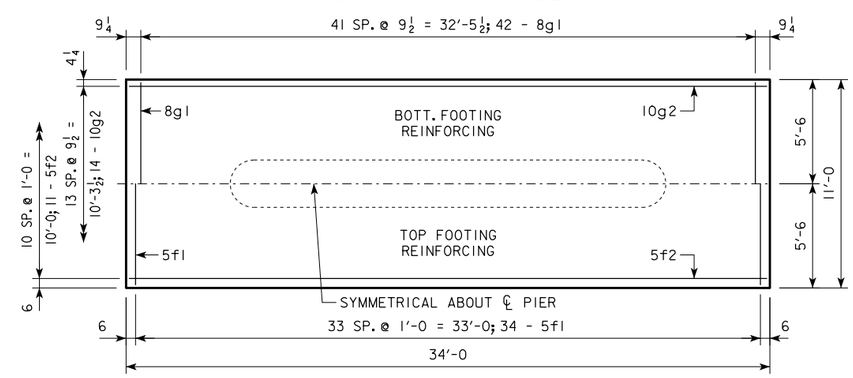

4'-0 x 11'-0 x 34'-0

NOTE:
SEE SHEET RS40-154-14 FOR FOOTING NOTES.

LATEST REVISION DATE

APPROVED BY BRIDGE ENGINEER

IOWA DOT Highway Division

STANDARD DESIGN - 40' ROADWAY, 3 SPAN BRIDGES

ROLLED STEEL BEAM BRIDGES

OCTOBER, 2014

TEE PIER - SPREAD FOOTINGS

30° SKEW - SHEET 2

RS40-155-14

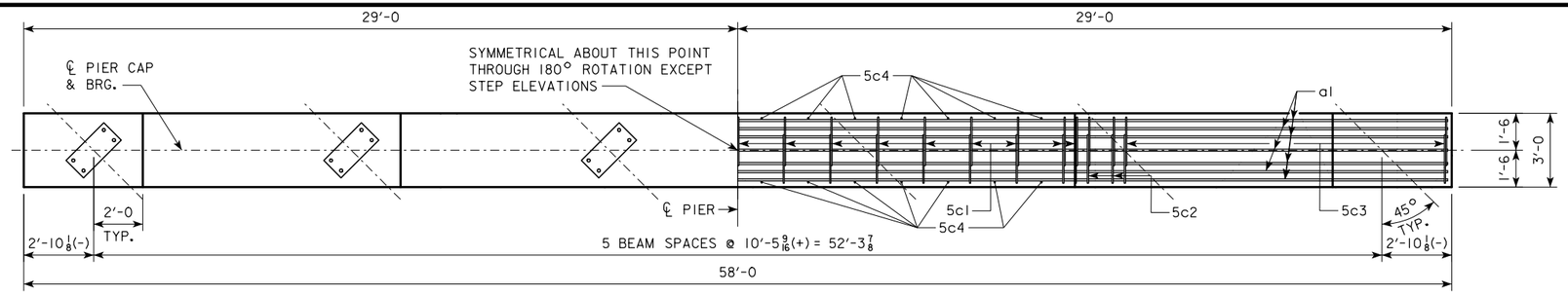

CAP PLAN

(LAYOUT OF a1 BARS SHOWN IS FOR 160'-0 TO 200'-0 SPANS)

NOTE:
ANCHOR BOLTS REQUIRED FOR FIXED PIER BEARINGS ONLY. FOR BOLT AND BEARING SIZES, SEE RS40-093-14, RS40-094-14 OR RS40-095-14.

NOTE:
SHIFT 5c1 BARS TO CLEAR d1 COLUMN BARS ALL SPANS.

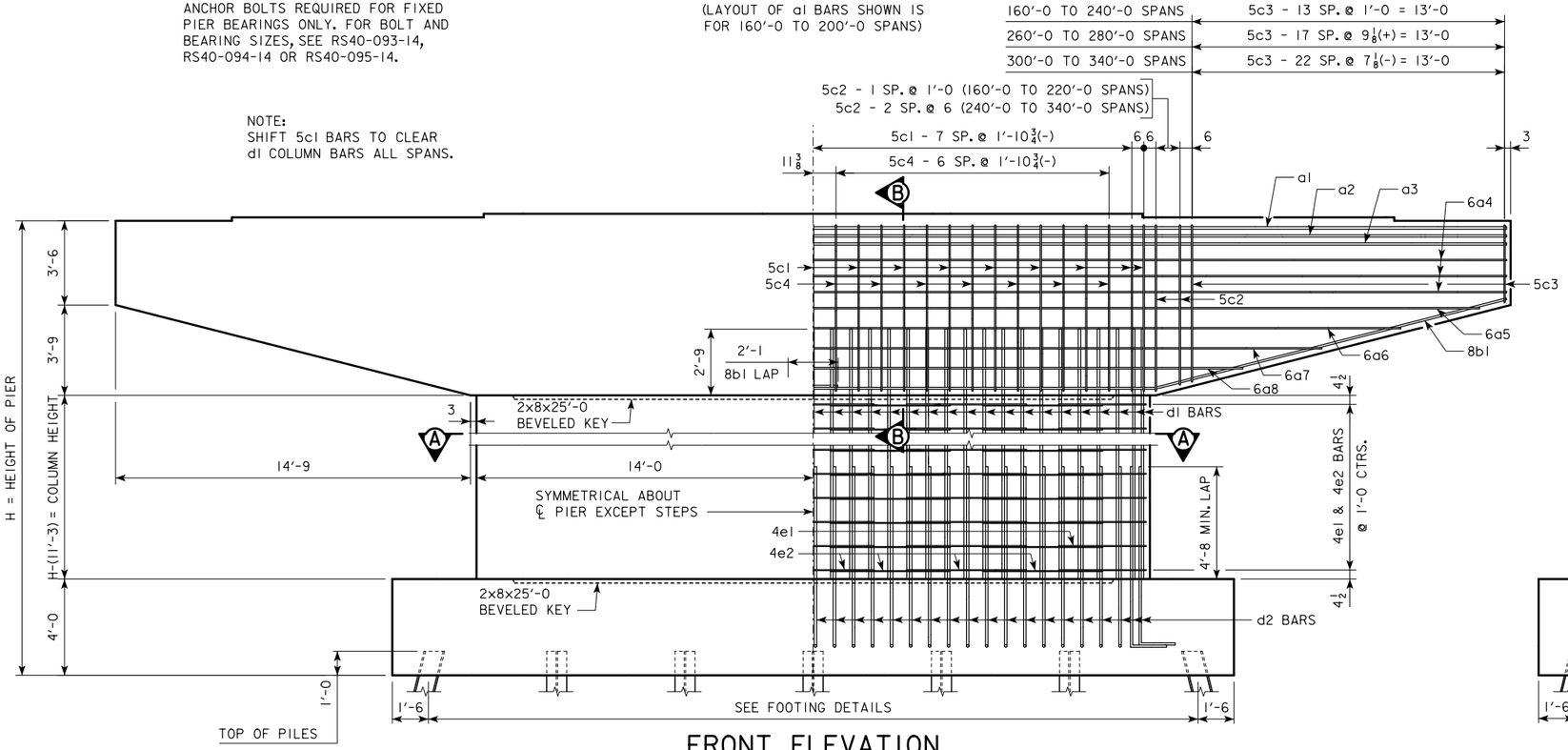

FRONT ELEVATION

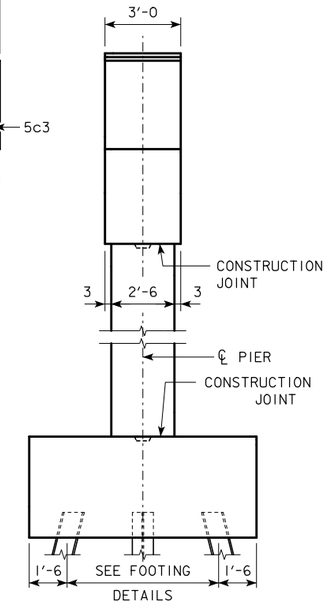

END ELEVATION

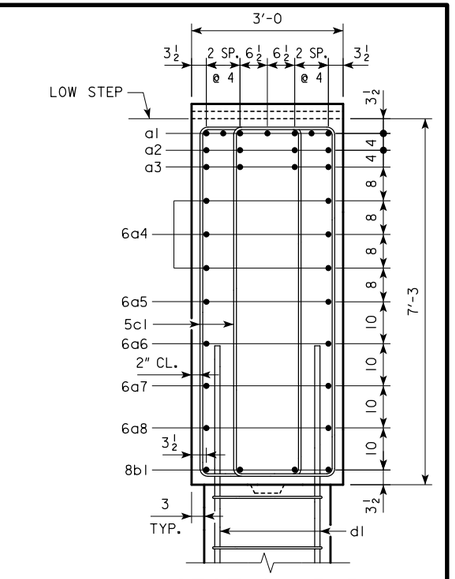

SECTION B-B

160'-0 TO 200'-0 SPANS

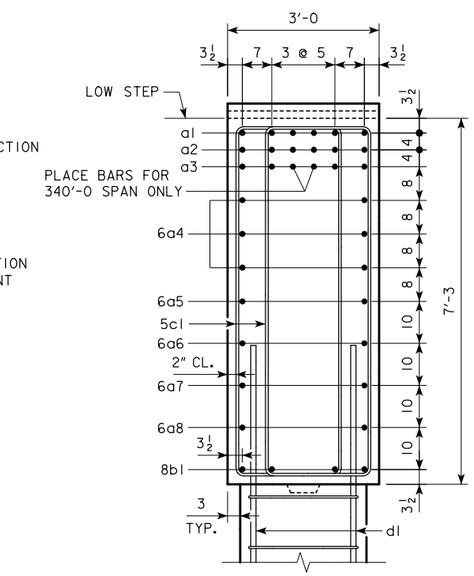

SECTION B-B

220'-0 TO 340'-0 SPANS

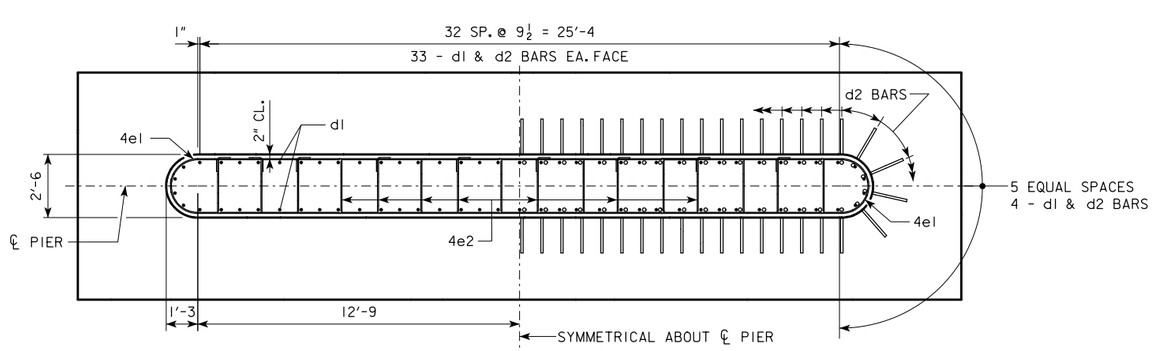

SECTION A-A

LATEST REVISION DATE

APPROVED BY BRIDGE ENGINEER

IOWA DOT Highway Division

STANDARD DESIGN - 40' ROADWAY, 3 SPAN BRIDGES

ROLLED STEEL BEAM BRIDGES

OCTOBER, 2014

TEE PIER CAP & COLUMN DETAILS

45° SKEW

RS40-156-14

CAP

REINFORCING STEEL																																				
℄ - ℄ ABUT. BEARINGS			160'-0			180'-0			200'-0			220'-0			240'-0			260'-0			280'-0			300'-0			320'-0			340'-0		
BAR	LENGTH	SHAPE	NO.	SIZE	WEIGHT	NO.	SIZE	WEIGHT	NO.	SIZE	WEIGHT	NO.	SIZE	WEIGHT	NO.	SIZE	WEIGHT	NO.	SIZE	WEIGHT	NO.	SIZE	WEIGHT	NO.	SIZE	WEIGHT	NO.	SIZE	WEIGHT	NO.	SIZE	WEIGHT
a1	57'-8		7	9	1372	7	9	1372	7	9	1372	6	9	1176	6	10	1489	6	10	1489	6	11	1838	6	11	1838	6	11	1838	6	11	1838
a2	57'-8		4	8	616	4	8	616	4	9	784	6	9	1176	6	9	1176	6	10	1489	6	10	1489	6	11	1838	6	11	1838	6	11	1838
a3	57'-8		4	8	616	4	8	616	4	8	616	4	9	784	4	9	784	4	9	784	4	10	993	4	10	993	4	10	993	6	10	1489
6a4	57'-8		6	6	520	6	6	520	6	6	520	6	6	520	6	6	520	6	6	520	6	6	520	6	6	520	6	6	520	6	6	520
6a5	55'-4		2	6	166	2	6	166	2	6	166	2	6	166	2	6	166	2	6	166	2	6	166	2	6	166	2	6	166	2	6	166
6a6	48'-10		2	6	147	2	6	147	2	6	147	2	6	147	2	6	147	2	6	147	2	6	147	2	6	147	2	6	147	2	6	147
6a7	42'-3		2	6	127	2	6	127	2	6	127	2	6	127	2	6	127	2	6	127	2	6	127	2	6	127	2	6	127	2	6	127
6a8	35'-8		2	6	107	2	6	107	2	6	107	2	6	107	2	6	107	2	6	107	2	6	107	2	6	107	2	6	107	2	6	107
8b1	30'-4		8	8	648	8	8	648	8	8	648	8	8	648	8	8	648	8	8	648	8	8	648	8	8	648	8	8	648	8	8	648
5c1	VARIES		34	5	668	34	5	668	34	5	668	34	5	674	34	5	674	34	5	674	34	5	674	34	5	674	34	5	674	34	5	674
5c2	VARIES		8	5	155	8	5	155	8	5	155	8	5	156	12	5	235	12	5	235	12	5	235	12	5	235	12	5	235	12	5	235
5c3	VARIES		56	5	866	56	5	866	56	5	866	56	5	876	56	5	876	72	5	1126	72	5	1126	92	5	1439	92	5	1439	92	5	1439
5c4	7'-5		28	5	217	28	5	217	28	5	217	28	5	217	28	5	217	28	5	217	28	5	217	28	5	217	28	5	217	28	5	217
① TOTAL (LB.)			6225			6225			6393			6774			7166			7729			8287			8949			8949			9445		
STRUCTURAL CONCRETE (CY)			42.2			42.2			42.2			42.2			42.2			42.2			42.2			42.2			42.2			42.2		

BENT BAR DETAILS

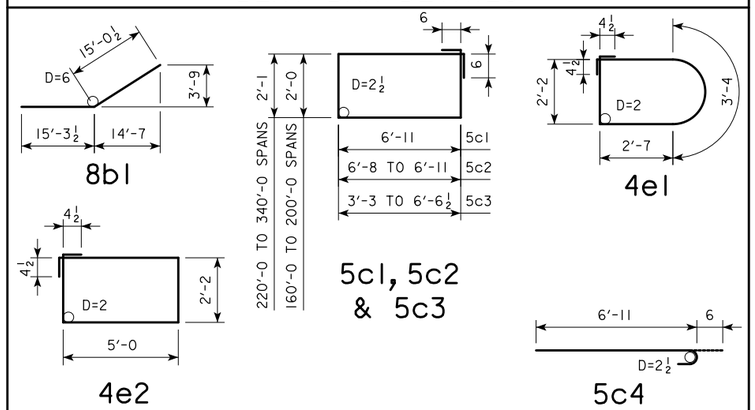

NOTE: ALL DIMENSIONS ARE OUT TO OUT.
D = PIN DIAMETER.

NOTE: THE REINFORCING STEEL QUANTITY IS TO BE INCLUDED ON THE SUMMARY QUANTITIES SHEET IN THE PLAN.

NOTE: THE CONCRETE QUANTITY IS TO BE INCLUDED ON THE SUMMARY QUANTITIES SHEET IN THE PLAN.

NOTE: THE PILE TYPE IS TO BE INCLUDED ON THE SUMMARY QUANTITIES SHEET IN THE PLAN.

COLUMN

H IN FEET	COLUMN HEIGHT	STRUCTURAL CONCRETE (CY)	REINFORCING STEEL												TOTAL WEIGHT (LB.)
			d1 BAR				4e1 BAR				4e2 BAR				
			NO.	SIZE	LENGTH	WEIGHT	NO.	SIZE	LENGTH	WEIGHT	NO.	SIZE	LENGTH	WEIGHT	
16	4'-9	12.1	74	9	7'-6	1887	10	4	11'-5	76	35	4	15'-1	353	2316
17	5'-9	14.6	74	9	8'-6	2139	12	4	11'-5	92	42	4	15'-1	423	2654
18	6'-9	17.2	74	9	9'-6	2390	14	4	11'-5	107	49	4	15'-1	494	2991
19	7'-9	19.7	74	9	10'-6	2642	16	4	11'-5	122	56	4	15'-1	564	3328
20	8'-9	22.3	74	9	11'-6	2893	18	4	11'-5	137	63	4	15'-1	635	3665
21	9'-9	24.8	74	9	12'-6	3145	20	4	11'-5	153	70	4	15'-1	705	4003
22	10'-9	27.3	74	9	13'-6	3397	22	4	11'-5	168	77	4	15'-1	776	4341
23	11'-9	29.9	74	9	14'-6	3648	24	4	11'-5	183	84	4	15'-1	846	4677
24	12'-9	32.4	74	9	15'-6	3900	26	4	11'-5	198	91	4	15'-1	917	5015
25	13'-9	35.0	74	9	16'-6	4151	28	4	11'-5	214	98	4	15'-1	987	5352
26	14'-9	37.5	74	9	17'-6	4403	30	4	11'-5	229	105	4	15'-1	1058	5690
27	15'-9	40.1	74	9	18'-6	4655	32	4	11'-5	244	112	4	15'-1	1128	6027
28	16'-9	42.6	74	9	19'-6	4906	34	4	11'-5	259	119	4	15'-1	1199	6364
29	17'-9	45.1	74	9	20'-6	5158	36	4	11'-5	275	126	4	15'-1	1270	6703
30	18'-9	47.7	74	9	21'-6	5409	38	4	11'-5	290	133	4	15'-1	1340	7039
31	19'-9	50.2	74	9	22'-6	5661	40	4	11'-5	305	140	4	15'-1	1411	7377
32	20'-9	52.8	74	9	23'-6	5913	42	4	11'-5	320	147	4	15'-1	1481	7714
33	21'-9	55.3	74	9	24'-6	6164	44	4	11'-5	336	154	4	15'-1	1552	8052
34	22'-9	57.9	74	9	25'-6	6416	46	4	11'-5	351	161	4	15'-1	1622	8389
35	23'-9	60.4	74	9	26'-6	6667	48	4	11'-5	366	168	4	15'-1	1693	8726
36	24'-9	62.9	74	9	27'-6	6919	50	4	11'-5	381	175	4	15'-1	1763	9063
37	25'-9	65.5	74	9	28'-6	7171	52	4	11'-5	397	182	4	15'-1	1834	9402
38	26'-9	68.0	74	9	29'-6	7422	54	4	11'-5	412	189	4	15'-1	1904	9738
39	27'-9	70.6	74	9	30'-6	7674	56	4	11'-5	427	196	4	15'-1	1975	10,076
40	28'-9	73.1	74	9	31'-6	7925	58	4	11'-5	442	203	4	15'-1	2045	10,412

PIER NOTES:

SEE "TEE PIER NOTES" ON RS40-003-14 FOR NOTES REGARDING APPLICATION OF THESE PIER STANDARDS.

MINIMUM CLEAR DISTANCE FROM FACE OF CONCRETE TO NEAR REINFORCING BAR SHALL BE 2 INCHES UNLESS OTHERWISE NOTED OR SHOWN.

① SEE SHEET RS40-169-14 FOR STEP REINFORCING STEEL QUANTITIES AND DETAILS.

LATEST REVISION DATE

APPROVED BY BRIDGE ENGINEER

IOWA DOT Highway Division

STANDARD DESIGN - 40' ROADWAY, 3 SPAN BRIDGES

ROLLED STEEL BEAM BRIDGES

OCTOBER, 2014

TEE PIER CAP & COLUMN DETAILS
45° SKEW

RS40-157-14

H IN FT.	℄ - ℄ ABUT. BRG.	PILING (HP10x57) NO. & LAYOUT	PILING (HP10x57) (1) LRFD Pu, STRENGTH I, DES. LOAD (KIPS)	FOOTING SIZE
16 TO 18	160'-0	17A	140	4' x 8' x 32'
	180'-0	18A	140	
	200'-0	19A	143	
	220'-0	20A	145	
	240'-0	21B	144	4' x 11' x 32'
	260'-0	22B	145	
	280'-0	24A	145	
	300'-0	26A	146	
	320'-0	27A	144	4' x 14' x 32'
	340'-0	28A	145	
19 TO 21	160'-0	17A	145	4' x 8' x 32'
	180'-0	18A	145	
	200'-0	20A	138	
	220'-0	21A	144	4' x 9' x 32'
	240'-0	22B	140	4' x 11' x 32'
	260'-0	23A	145	
	280'-0	25A	145	
	300'-0	26B	143	4' x 14' x 32'
	320'-0	28A	142	
	340'-0	29A	145	
22 TO 24	160'-0	18A	140	4' x 8' x 32'
	180'-0	19A	144	
	200'-0	20B	141	4' x 9' x 32'
	220'-0	22A	142	
	240'-0	22B	143	4' x 11' x 32'
	260'-0	24A	143	
	280'-0	26A	145	
	300'-0	26B	146	4' x 14' x 32'
	320'-0	28A	145	
	340'-0	30A	144	
25 TO 27	160'-0	18A	145	4' x 8' x 32'
	180'-0	20A	139	
	200'-0	21A	141	4' x 9' x 32'
	220'-0	22B	137	4' x 11' x 32'
	240'-0	22B	147	
	260'-0	24A	146	
	280'-0	26B	141	4' x 14' x 32'
	300'-0	27A	145	
	320'-0	29A	144	
	340'-0	30A	147	
28 TO 30	160'-0	19A	143	4' x 8' x 32'
	180'-0	20A	143	
	200'-0	21A	144	4' x 9' x 32'
	220'-0	22B	140	4' x 11' x 32'
	240'-0	23A	146	
	260'-0	25A	145	
	280'-0	26B	144	4' x 14' x 32'
	300'-0	28A	143	
	320'-0	30A	143	
	340'-0	31A	146	
31 TO 33	160'-0	20A	138	4' x 8' x 32'
	180'-0	20B	144	4' x 9' x 32'
	200'-0	22A	142	
	220'-0	22B	143	4' x 11' x 32'
	240'-0	24A	143	
	260'-0	26A	145	
	280'-0	26B	146	4' x 14' x 32'
	300'-0	28A	145	
	320'-0	30A	145	
	340'-0	32B	143	4' x 14' x 36'
34 TO 36	160'-0	20A	143	4' x 8' x 32'
	180'-0	21A	144	4' x 9' x 32'
	200'-0	22B	137	4' x 11' x 32'
	220'-0	22B	146	
	240'-0	24A	146	
	260'-0	26B	140	4' x 14' x 32'
	280'-0	27A	145	
	300'-0	29A	144	
	320'-0	31A	145	
	340'-0	32B	145	4' x 14' x 36'

H IN FT.	℄ - ℄ ABUT. BRG.	PILING (HP10x57) NO. & LAYOUT	PILING (HP10x57) (1) LRFD Pu, STRENGTH I, DES. LOAD (KIPS)	FOOTING SIZE
37 TO 40	160'-0	20B	145	4' x 9' x 32'
	180'-0	22A	144	
	200'-0	22B	141	4' x 11' x 32'
	220'-0	23A	146	
	240'-0	25A	146	
	260'-0	26B	143	4' x 14' x 32'
	280'-0	28A	143	
	300'-0	30A	144	
	320'-0	32A	145	4' x 14' x 34'
	340'-0	32C	146	4' x 15' x 38'

FOOTING SIZE	REINFORCING STEEL (ONE FOOTING) BAR	NO., SIZE & SPACING	LENGTH	WEIGHT (LB.)	TOTAL WEIGHT (LB.)	STRUCTURAL CONCRETE (CY)
4' x 8' x 32'	d2	74 - #9 AS SHOWN	9'-1	2285	3601	37.9
	f1	32 - #5 @ 1'-0	7'-8	256		
	f2	8 - #5 @ 1'-0	31'-8	264		
	g1	32 - #6 @ 1'-0	7'-8	368		
	g2	9 - #6 @ 0'-11	31'-8	428		
4' x 9' x 32'	d2	74 - #9 AS SHOWN	9'-1	2285	3820	42.7
	f1	32 - #5 @ 1'-0	8'-8	289		
	f2	9 - #5 @ 1'-0	31'-8	297		
	g1	40 - #6 @ 0'-9½	8'-8	521		
	g2	9 - #6 @ 1'-0	31'-8	428		
4' x 11' x 32'	d2	74 - #9 AS SHOWN	9'-1	2285	4600	52.1
	f1	32 - #5 @ 1'-0	10'-8	356		
	f2	11 - #5 @ 1'-0	31'-8	363		
	g1	36 - #8 @ 0'-10½	10'-8	1025		
	g2	12 - #6 @ 0'-11	31'-8	571		
4' x 14' x 32'	d2	74 - #9 AS SHOWN	9'-1	2285	5681	66.4
	f1	32 - #5 @ 1'-0	13'-8	456		
	f2	14 - #5 @ 1'-0	31'-8	462		
	g1	39 - #9 @ 0'-9½	13'-8	1812		
	g2	14 - #6 @ 1'-0	31'-8	666		
4' x 14' x 34'	d2	74 - #9 AS SHOWN	9'-1	2285	6337	70.5
	f1	34 - #5 @ 1'-0	13'-8	485		
	f2	14 - #5 @ 1'-0	33'-8	492		
	g1	41 - #9 @ 0'-10	13'-8	1905		
	g2	17 - #7 @ 0'-10	33'-8	1170		
4' x 14' x 36'	d2	74 - #9 AS SHOWN	9'-1	2285	7136	74.7
	f1	36 - #5 @ 1'-0	13'-8	513		
	f2	14 - #5 @ 1'-0	35'-8	521		
	g1	43 - #9 @ 0'-10	13'-8	1998		
	g2	15 - #9 @ 0'-11½	35'-8	1819		
4' x 15' x 38'	d2	74 - #9 AS SHOWN	9'-1	2285	8182	84.4
	f1	38 - #5 @ 1'-0	14'-8	581		
	f2	15 - #5 @ 1'-0	37'-8	589		
	g1	46 - #9 @ 0'-10	14'-8	2294		
	g2	19 - #9 @ 0'-9½	37'-8	2433		

(1) NOTE: PU, STRENGTH I DESIGN LOAD (KIPS) IS NOT THE VALUE USED IN THE FIELD FOR DRIVING PILES.

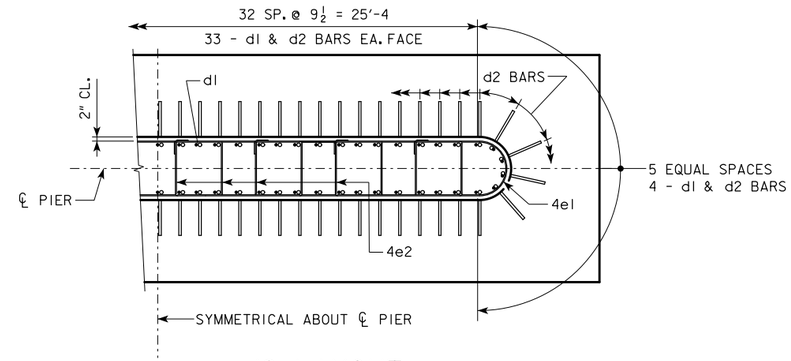

d2 LAYOUT

(SEE SECTION A-A ON SHEET RS40-156-14.)

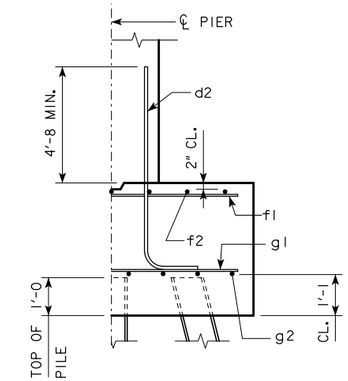

TYPICAL SECTION

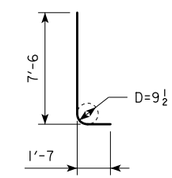

d2

NOTE: D = PIN DIAMETER.
DIMENSIONS ARE OUT TO OUT.

NOTE: THE REINFORCING STEEL QUANTITY IS TO BE INCLUDED ON THE SUMMARY QUANTITIES SHEET IN THE PLAN.

NOTE: THE CONCRETE QUANTITY IS TO BE INCLUDED ON THE SUMMARY QUANTITIES SHEET IN THE PLAN.

NOTE: THE PILE TYPE IS TO BE INCLUDED ON THE SUMMARY QUANTITIES SHEET IN THE PLAN.

FOOTING NOTES:

THESE FOOTINGS ARE DESIGNED AND DETAILED TO BE USED WITH THE CAP AND COLUMN DETAILS OF THE TEE PIERS AS SHOWN ON SHEET RS40-156-14.

BATTER PILES IN EXTERIOR ROWS 1:4 IN THE DIRECTION SHOWN.

STEEL PILING USED AS POINT BEARING SHALL HAVE A MINIMUM DISTANCE OF APPROXIMATELY 10 FEET FROM BOTTOM OF FOOTING TO TOP OF BEARING ROCK. THE PILE LAYOUTS ARE SUCH THAT THE DISTANCE CENTER TO CENTER OF ADJACENT PILING SHALL NOT EXCEED 8'-0.

PIER PILES SHALL BE DRIVEN TO VALUES SHOWN IN DESIGN PLANS.

LATEST REVISION DATE

APPROVED BY BRIDGE ENGINEER

IOWA DOT Highway Division

STANDARD DESIGN - 40' ROADWAY, 3 SPAN BRIDGES

ROLLED STEEL BEAM BRIDGES

OCTOBER, 2014

TEE PIER-HP10x57 SRL-1
STEEL PILE FOOTINGS
45° SKEW - SHEET 1

RS40-158-14

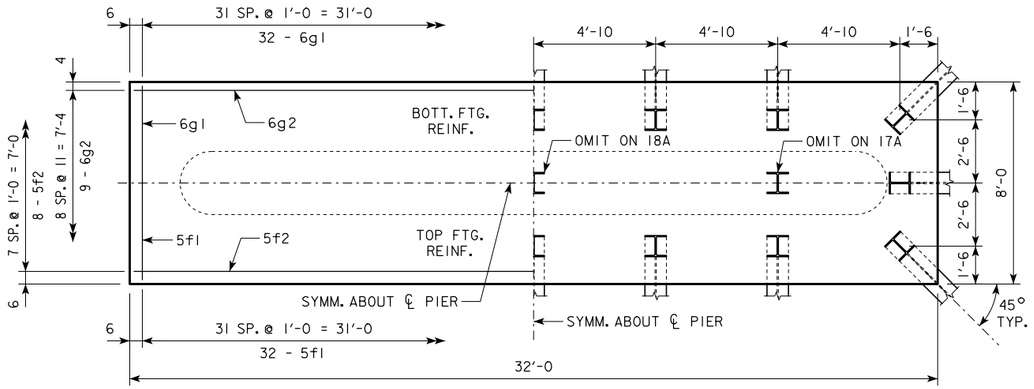

4'-0 x 8'-0 x 32'-0 FOR 17A & 18A

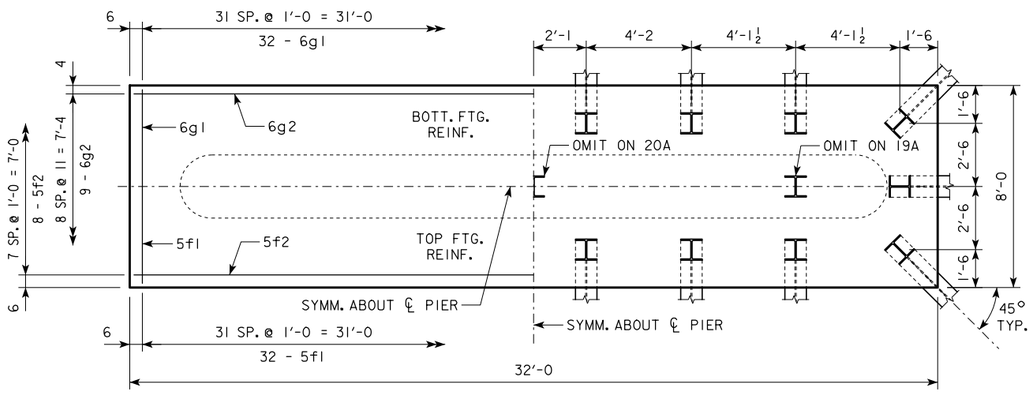

4'-0 x 8'-0 x 32'-0 FOR 19A & 20A

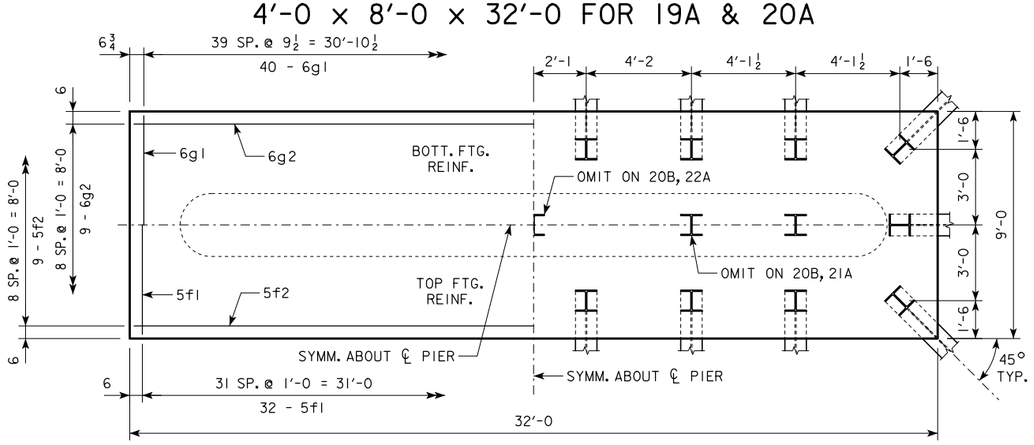

4'-0 x 9'-0 x 32'-0 FOR 20B, 21A & 22A

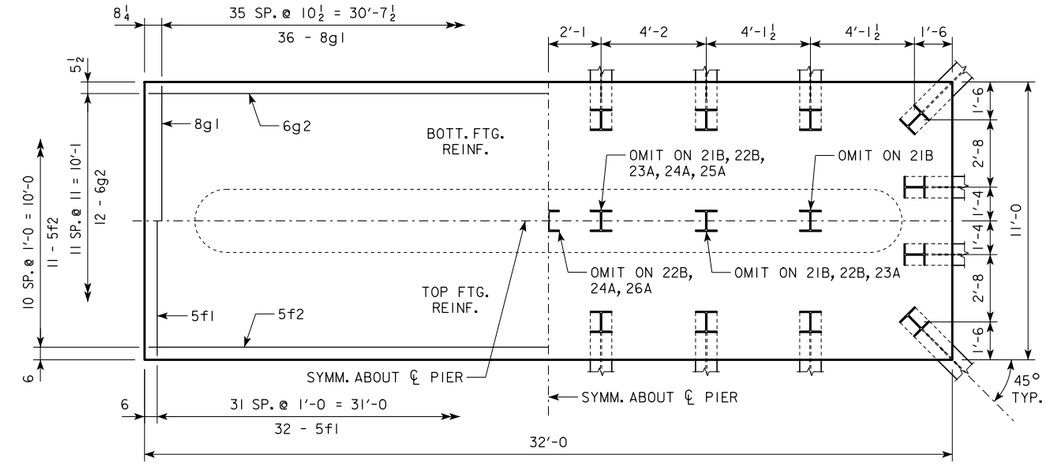

4'-0 x 11'-0 x 32'-0 FOR 21B, 22B, 23A, 24A, 25A & 26A

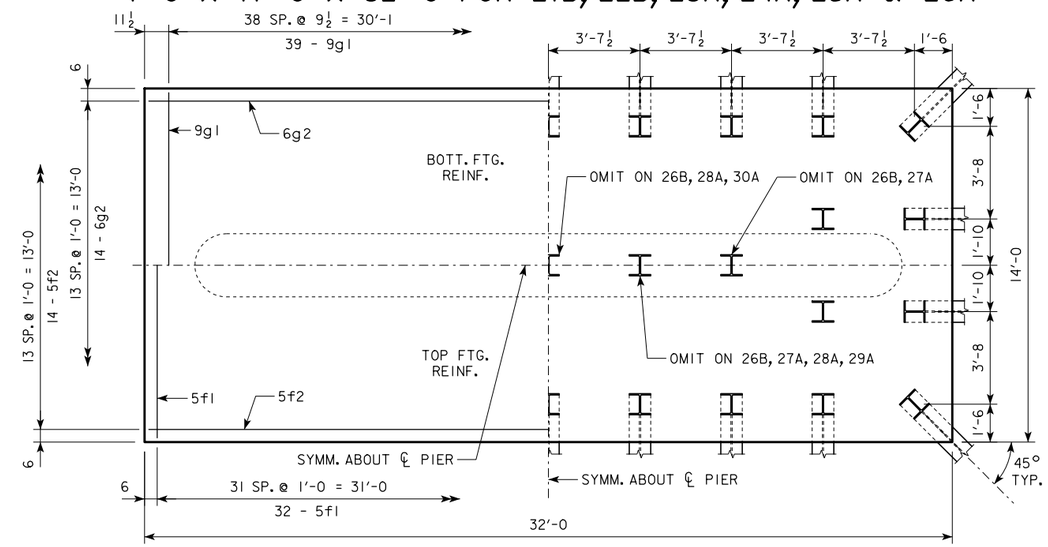

4'-0 x 14'-0 x 32'-0 FOR 26B, 27A, 28A, 29A, 30A & 31A

NOTE:
SEE SHEET RS40-158-14 FOR FOOTING NOTES.

LATEST REVISION DATE

APPROVED BY BRIDGE ENGINEER

IOWA DOT Highway Division

STANDARD DESIGN - 40' ROADWAY, 3 SPAN BRIDGES

ROLLED STEEL BEAM BRIDGES

OCTOBER, 2014

TEE PIER-HP10x57 SRL-I STEEL PILE FOOTINGS

45° SKEW - SHEET 2

RS40-159-14

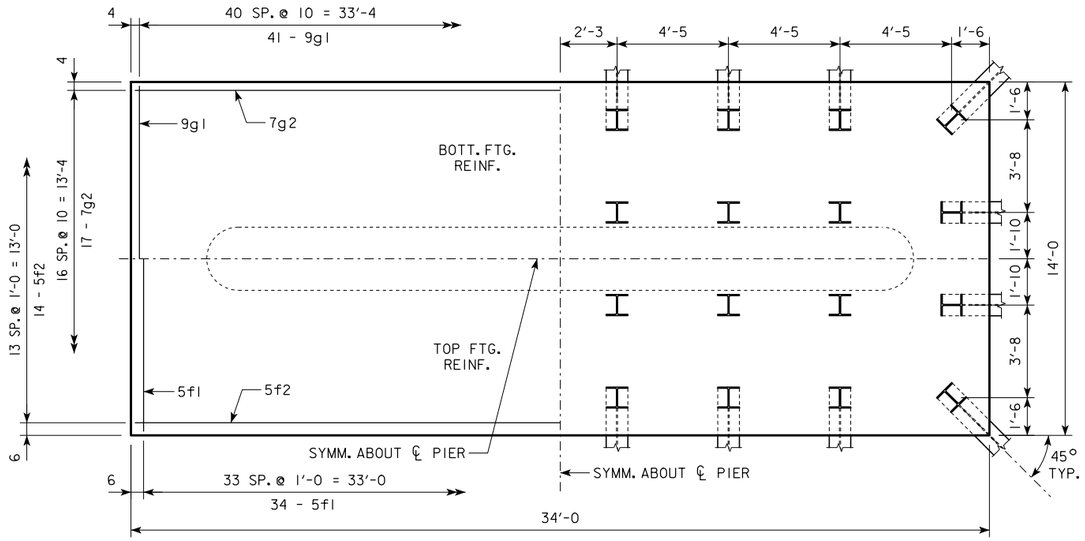

4'-0 x 14'-0 x 34'-0 FOR 32A

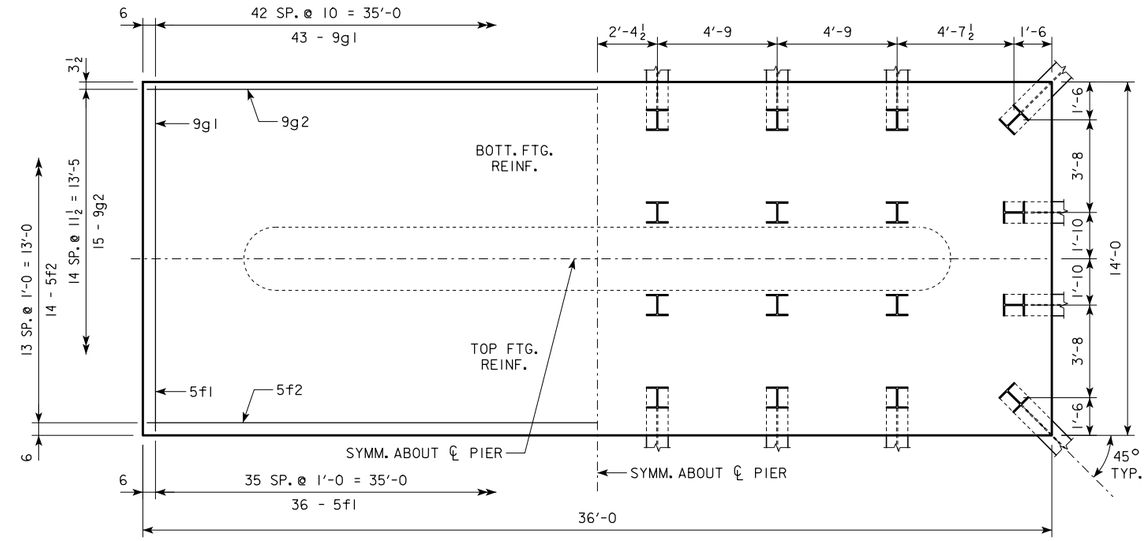

4'-0 x 14'-0 x 36'-0 FOR 32B

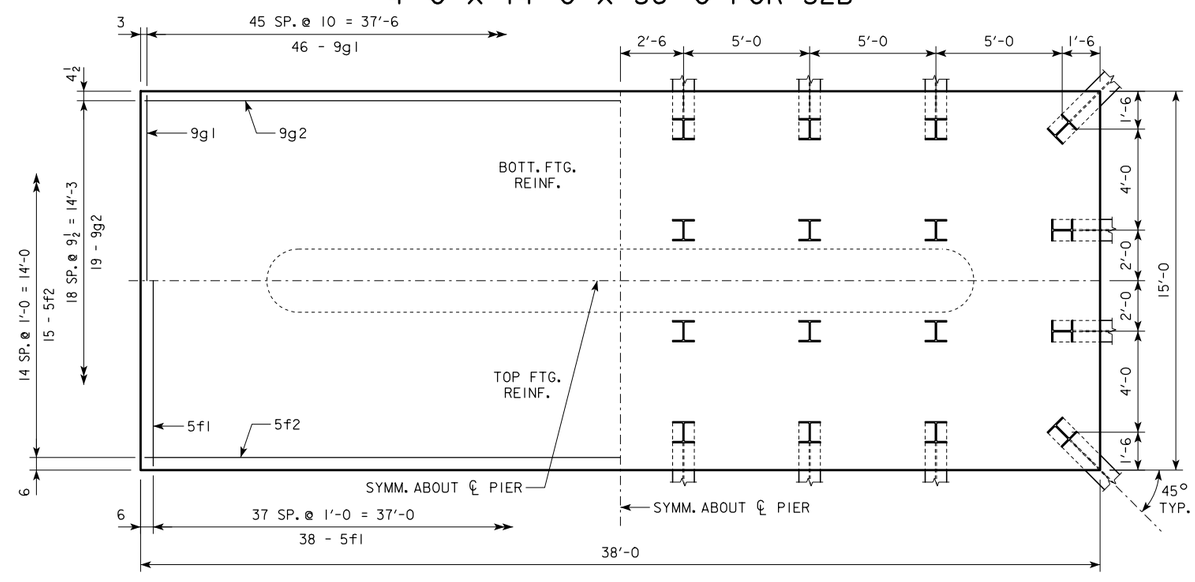

4'-0 x 15'-0 x 38'-0 FOR 32C

NOTE:
SEE SHEET RS40-158-14 FOR FOOTING NOTES.

LATEST REVISION DATE

APPROVED BY BRIDGE ENGINEER

IOWADOT Highway Division

STANDARD DESIGN - 40' ROADWAY, 3 SPAN BRIDGES

ROLLED STEEL BEAM BRIDGES

OCTOBER, 2014

TEE PIER-HP10x57 SRL-I STEEL PILE FOOTINGS

45° SKEW - SHEET 3

RS40-160-14

H IN FT.	℄ - ℄ ABUT. BRG.	PILING (HP10x57) NO. & LAYOUT	PILING (HP10x57) (1) LRFD Pu, STRENGTH I, DES. LOAD (KIPS)	FOOTING SIZE
16 TO 18	160'-0	12A	197	4' x 7' x 32'
	180'-0	12A	210	
	200'-0	12B	212	4' x 8' x 32'
	220'-0	13A	217	
	240'-0	14A	214	
	260'-0	15A	218	
	280'-0	16A	219	4' x 9' x 32'
	300'-0	16C	218	4' x 11' x 32'
	320'-0	18A	210	
	340'-0	18A	219	
19 TO 21	160'-0	12A	204	4' x 7' x 32'
	180'-0	12A	218	
	200'-0	12B	218	4' x 8' x 32'
	220'-0	14A	205	
	240'-0	15A	211	
	260'-0	16A	210	4' x 9' x 32'
	280'-0	17A	215	4' x 10' x 32'
	300'-0	17B	214	4' x 11' x 32'
	320'-0	18A	215	
	340'-0	19A	217	
22 TO 24	160'-0	12A	211	4' x 7' x 32'
	180'-0	12B	213	4' x 8' x 32'
	200'-0	13A	214	
	220'-0	14A	212	
	240'-0	15B	214	4' x 9' x 32'
	260'-0	16A	215	
	280'-0	17B	208	4' x 11' x 32'
	300'-0	17B	219	
	320'-0	18A	220	
	340'-0	20A	214	
25 TO 27	160'-0	12B	206	4' x 8' x 32'
	180'-0	12B	219	
	200'-0	14A	203	
	220'-0	14B	214	4' x 9' x 32'
	240'-0	15C	218	4' x 10' x 32'
	260'-0	16B	218	
	280'-0	17B	212	4' x 11' x 32'
	300'-0	18A	213	
	320'-0	19A	217	
	340'-0	20B	217	4' x 12' x 32'
28 TO 30	160'-0	12B	212	4' x 8' x 32'
	180'-0	13A	214	
	200'-0	14B	205	4' x 9' x 32'
	220'-0	14B	219	
	240'-0	16B	210	4' x 10' x 32'
	260'-0	16C	211	4' x 11' x 32'
	280'-0	17B	216	
	300'-0	18A	217	
	320'-0	19B	219	4' x 12' x 32'
	340'-0	20C	219	4' x 14' x 32'
31 TO 33	160'-0	12C	215	4' x 9' x 32'
	180'-0	13B	217	
	200'-0	14B	212	
	220'-0	15C	213	4' x 10' x 32'
	240'-0	16B	215	
	260'-0	16C	215	4' x 11' x 32'
	280'-0	17C	219	4' x 12' x 32'
	300'-0	18B	220	
	320'-0	20C	213	4' x 14' x 32'
	340'-0	21A	215	
34 TO 36	160'-0	13B	211	4' x 9' x 32'
	180'-0	14B	208	
	200'-0	14C	214	4' x 10' x 32'
	220'-0	15C	219	
	240'-0	16C	208	4' x 11' x 32'
	260'-0	17B	212	
	280'-0	18B	212	4' x 12' x 32'
	300'-0	19B	216	
	320'-0	20C	217	4' x 14' x 32'
	340'-0	21A	219	

H IN FT.	℄ - ℄ ABUT. BRG.	PILING (HP10x57) NO. & LAYOUT	PILING (HP10x57) (1) LRFD Pu, STRENGTH I, DES. LOAD (KIPS)	FOOTING SIZE
37 TO 40	160'-0	13C	215	4' x 10' x 32'
	180'-0	14C	211	
	200'-0	15C	214	
	220'-0	15D	217	4' x 11' x 32'
	240'-0	16C	216	
	260'-0	17C	216	4' x 12' x 32'
	280'-0	18B	219	
	300'-0	19C	219	4' x 14' x 32'
	320'-0	20D	210	4' x 14' x 34'
	340'-0	21B	211	

FOOTING SIZE	REINFORCING STEEL (ONE FOOTING) BAR	NO., SIZE & SPACING	LENGTH	WEIGHT (LB.)	TOTAL WEIGHT (LB.)	STRUCTURAL CONCRETE (CY)
4' x 7' x 32'	d2	74 - #9 AS SHOWN	9'-1	2285	3487	33.2
	f1	32 - #5 @ 1'-0	6'-8	223		
	f2	7 - #5 @ 1'-0	31'-8	231		
	g1	32 - #6 @ 1'-0	6'-8	320		
	g2	9 - #6 @ 0'-9½	31'-8	428		
4' x 8' x 32'	d2	74 - #9 AS SHOWN	9'-1	2285	3791	37.9
	f1	32 - #5 @ 1'-0	7'-8	256		
	f2	8 - #5 @ 1'-0	31'-8	264		
	g1	32 - #6 @ 1'-0	7'-8	368		
	g2	13 - #6 @ 0'-7½	31'-8	618		
4' x 9' x 32'	d2	74 - #9 AS SHOWN	9'-1	2285	3984	42.7
	f1	32 - #5 @ 1'-0	8'-8	289		
	f2	9 - #5 @ 1'-0	31'-8	297		
	g1	38 - #6 @ 0'-10	8'-8	495		
	g2	13 - #6 @ 0'-8½	31'-8	618		
4' x 10' x 32'	d2	74 - #9 AS SHOWN	9'-1	2285	4267	47.4
	f1	32 - #5 @ 1'-0	9'-8	323		
	f2	10 - #5 @ 1'-0	31'-8	330		
	g1	36 - #7 @ 0'-10½	9'-8	711		
	g2	13 - #6 @ 0'-9½	31'-8	618		
4' x 11' x 32'	d2	74 - #9 AS SHOWN	9'-1	2285	4813	52.1
	f1	32 - #5 @ 1'-0	10'-8	356		
	f2	11 - #5 @ 1'-0	31'-8	363		
	g1	34 - #8 @ 0'-11	10'-8	968		
	g2	13 - #7 @ 0'-10½	31'-8	841		
4' x 12' x 32'	d2	74 - #9 AS SHOWN	9'-1	2285	5180	56.9
	f1	32 - #5 @ 1'-0	11'-8	389		
	f2	12 - #5 @ 1'-0	31'-8	396		
	g1	32 - #9 @ 1'-0	11'-8	1269		
	g2	13 - #7 @ 0'-11½	31'-8	841		
4' x 14' x 32'	d2	74 - #9 AS SHOWN	9'-1	2285	5871	66.4
	f1	32 - #5 @ 1'-0	13'-8	456		
	f2	14 - #5 @ 1'-0	31'-8	462		
	g1	39 - #9 @ 0'-9½	13'-8	1812		
	g2	18 - #6 @ 0'-9½	31'-8	856		
4' x 14' x 34'	d2	74 - #9 AS SHOWN	9'-1	2285	6875	70.5
	f1	34 - #5 @ 1'-0	13'-8	485		
	f2	14 - #5 @ 1'-0	33'-8	492		
	g1	41 - #9 @ 0'-10	13'-8	1905		
	g2	19 - #8 @ 0'-9	33'-8	1708		

(1) NOTE: PU, STRENGTH I DESIGN LOAD (KIPS) IS NOT THE VALUE USED IN THE FIELD FOR DRIVING PILES.

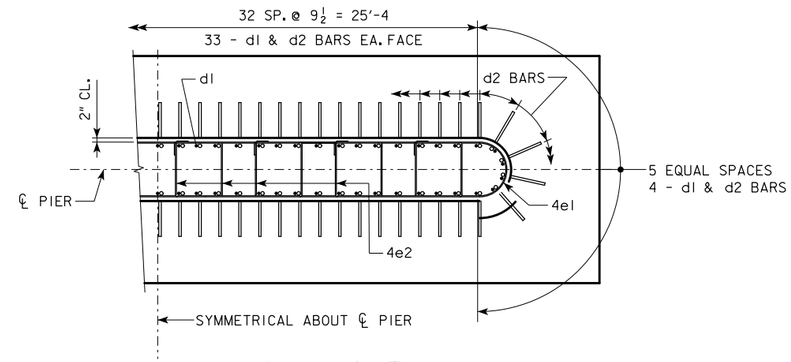

d2 LAYOUT

(SEE SECTION A-A ON SHEET RS40-156-14.)

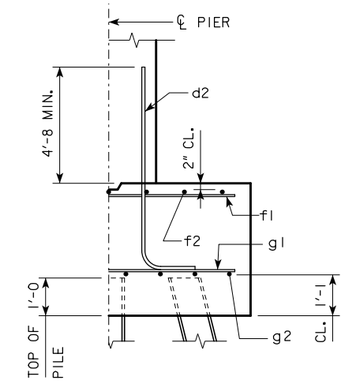

TYPICAL SECTION

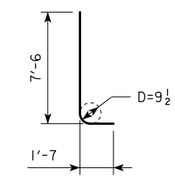

d2

NOTE: D = PIN DIAMETER.
DIMENSIONS ARE OUT TO OUT.

NOTE: THE REINFORCING STEEL QUANTITY IS TO BE INCLUDED ON THE SUMMARY QUANTITIES SHEET IN THE PLAN.

NOTE: THE CONCRETE QUANTITY IS TO BE INCLUDED ON THE SUMMARY QUANTITIES SHEET IN THE PLAN.

NOTE: THE PILE TYPE IS TO BE INCLUDED ON THE SUMMARY QUANTITIES SHEET IN THE PLAN.

FOOTING NOTES:

THESE FOOTINGS ARE DESIGNED AND DETAILED TO BE USED WITH THE CAP AND COLUMN DETAILS OF THE TEE PIERS AS SHOWN ON SHEET RS40-156-14.

BATTER PILES IN EXTERIOR ROWS 1:4 IN THE DIRECTION SHOWN.

STEEL PILING USED AS POINT BEARING SHALL HAVE A MINIMUM DISTANCE OF APPROXIMATELY 10 FEET FROM BOTTOM OF FOOTING TO TOP OF BEARING ROCK. THE PILE LAYOUTS ARE SUCH THAT THE DISTANCE CENTER TO CENTER OF ADJACENT PILING SHALL NOT EXCEED 8'-0.

PIER PILES SHALL BE DRIVEN TO VALUES SHOWN IN DESIGN PLANS.

LATEST REVISION DATE

APPROVED BY BRIDGE ENGINEER

IOWA DOT Highway Division

STANDARD DESIGN - 40' ROADWAY, 3 SPAN BRIDGES

ROLLED STEEL BEAM BRIDGES

OCTOBER, 2014

TEE PIER-HP10x57 SRL-2
STEEL PILE FOOTINGS
45° SKEW - SHEET 1

RS40-161-14

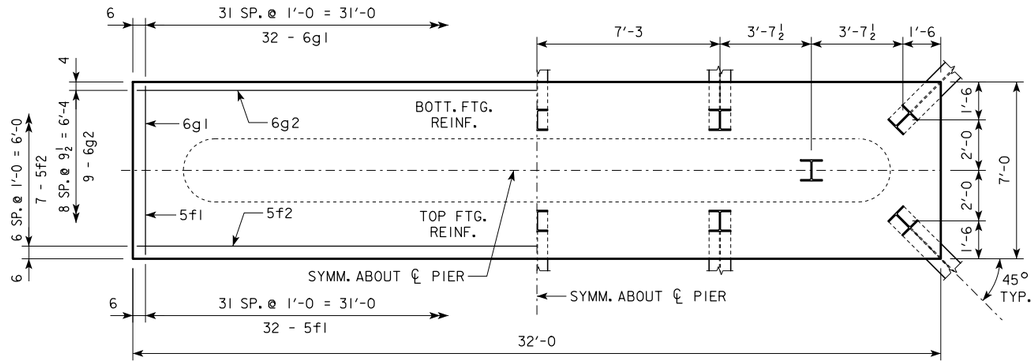

4'-0 x 7'-0 x 32'-0 FOR 12A

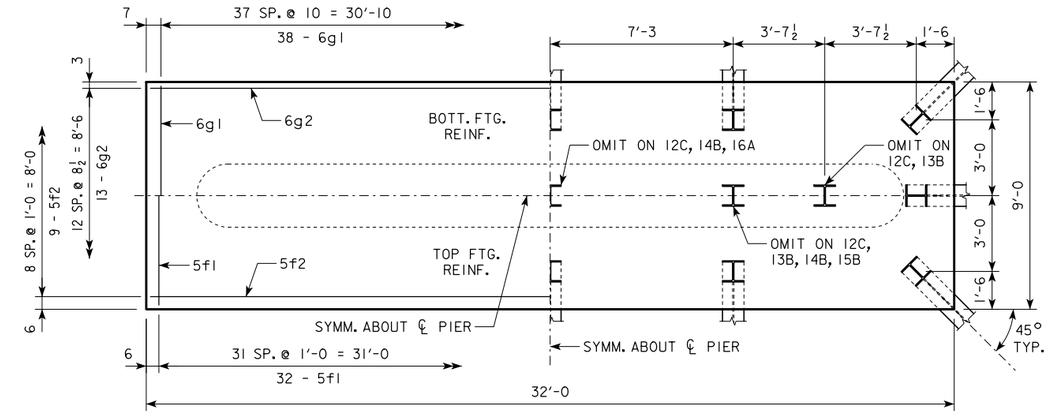

4'-0 x 9'-0 x 32'-0 FOR 12C, 13B, 14B, 15B & 16A

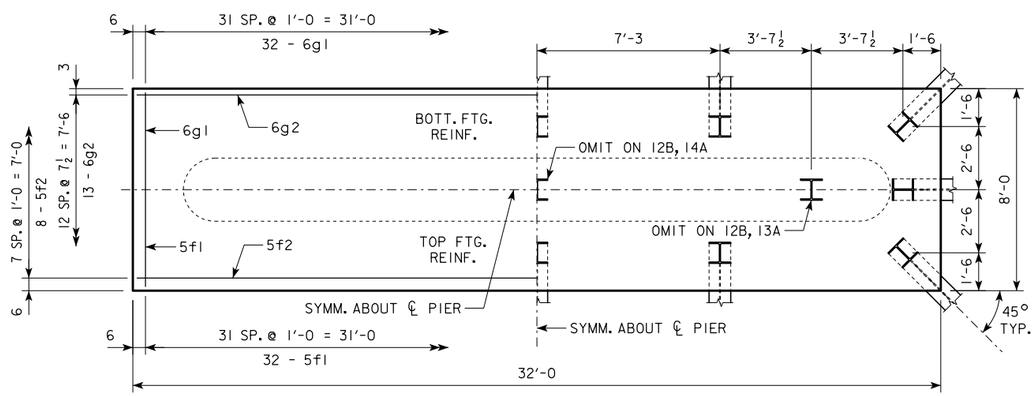

4'-0 x 8'-0 x 32'-0 FOR 12B, 13A, 14A & 15A

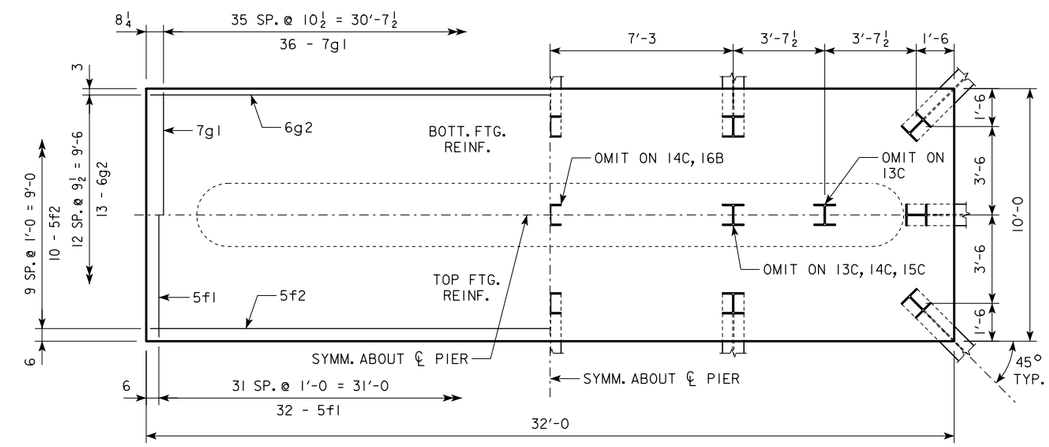

4'-0 x 10'-0 x 32'-0 FOR 13C, 14C, 15C, 16B & 17A

NOTE:
SEE SHEET RS40-161-14 FOR FOOTING NOTES.

LATEST REVISION DATE

APPROVED BY BRIDGE ENGINEER

IOWA DOT Highway Division

STANDARD DESIGN - 40' ROADWAY, 3 SPAN BRIDGES

ROLLED STEEL BEAM BRIDGES

OCTOBER, 2014

TEE PIER-HP10x57 SRL-2
STEEL PILE FOOTINGS
45° SKEW - SHEET 2

RS40-162-14

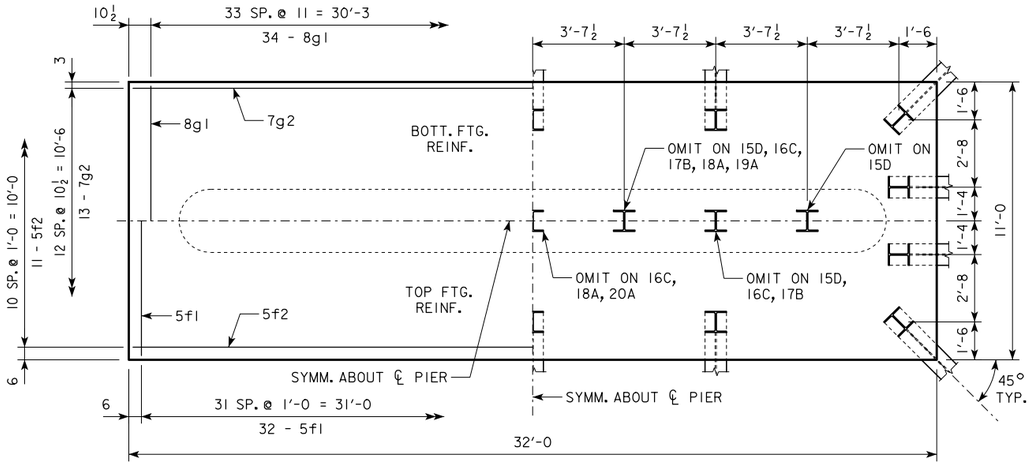

4'-0 x 11'-0 x 32'-0 FOR 15D, 16C, 17B, 18A, 19A & 20A

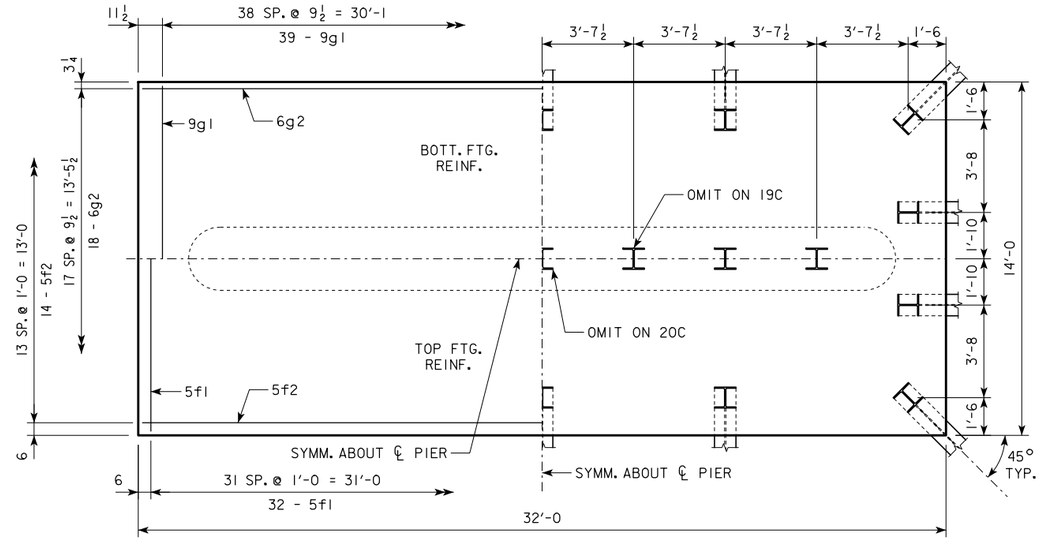

4'-0 x 14'-0 x 32'-0 FOR 19C, 20C & 21A

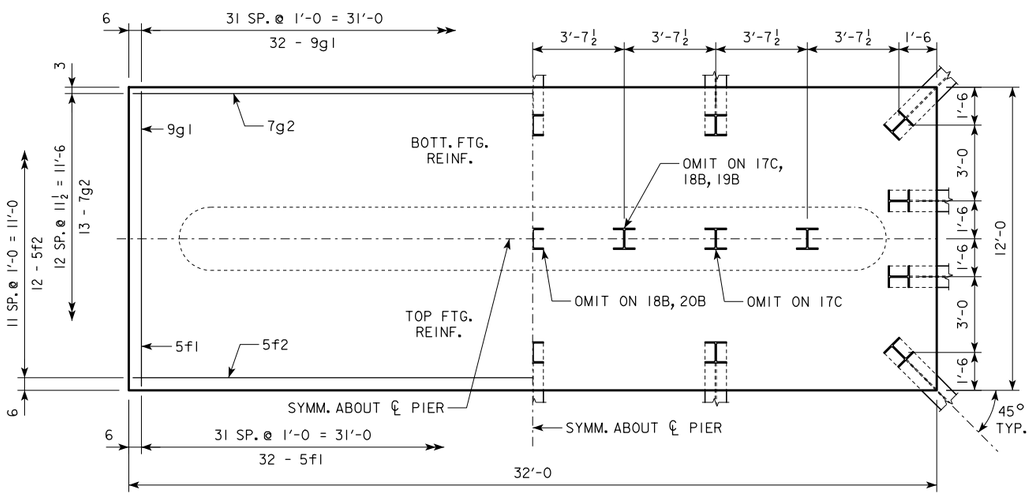

4'-0 x 12'-0 x 32'-0 FOR 17C, 18B, 19B & 20B

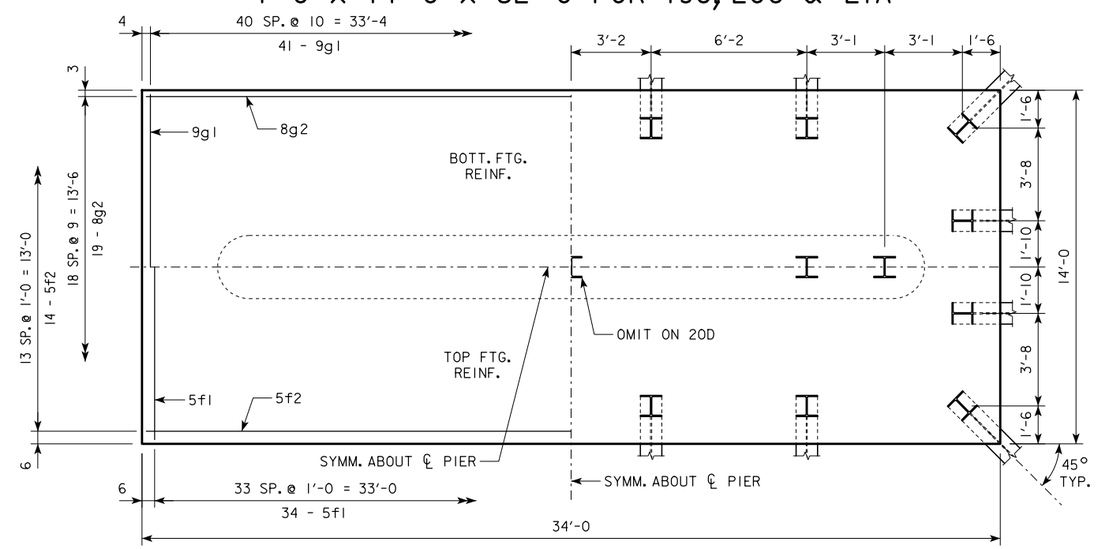

4'-0 x 14'-0 x 34'-0 FOR 20D & 21B

NOTE:
SEE SHEET RS40-161-14 FOR FOOTING NOTES.

LATEST REVISION DATE

APPROVED BY BRIDGE ENGINEER

IOWA DOT Highway Division

STANDARD DESIGN - 40' ROADWAY, 3 SPAN BRIDGES

ROLLED STEEL BEAM BRIDGES

OCTOBER, 2014

TEE PIER-HP10x57 SRL-2
STEEL PILE FOOTINGS
45° SKEW - SHEET 3

RS40-163-14

H IN FT.	℄ - ℄ ABUT. BRG.	FOOTING SIZE
16 TO 18	160′-0 180′-0	4′ x 7′ x 32′
	200′-0	4′ x 7′ x 34′
	220′-0 240′-0	4′ x 8′ x 34′
	260′-0	4′ x 8′ x 36′
	280′-0 300′-0	4′ x 9′ x 36′
	320′-0 340′-0	4′ x 9′ x 38′
19 TO 21	160′-0	4′ x 7′ x 32′
	180′-0 200′-0	4′ x 7′ x 34′
	220′-0 240′-0	4′ x 8′ x 34′
	260′-0	4′ x 8′ x 36′
	280′-0 300′-0	4′ x 9′ x 36′
	320′-0	4′ x 9′ x 38′
	340′-0	4′ x 10′ x 38′
22 TO 24	160′-0	4′ x 7′ x 32′
	180′-0	4′ x 7′ x 34′
	200′-0 220′-0	4′ x 8′ x 34′
	240′-0	4′ x 8′ x 36′
	260′-0 280′-0	4′ x 9′ x 36′
	300′-0 320′-0	4′ x 9′ x 38′
	340′-0	4′ x 10′ x 38′
25 TO 27	160′-0	4′ x 7′ x 34′
	180′-0 200′-0 220′-0	4′ x 8′ x 34′
	240′-0	4′ x 8′ x 36′
	260′-0 280′-0	4′ x 9′ x 36′
	300′-0	4′ x 9′ x 38′
	320′-0 340′-0	4′ x 10′ x 38′
28 TO 30	160′-0 180′-0 200′-0	4′ x 8′ x 34′
	220′-0	4′ x 8′ x 36′
	240′-0 260′-0	4′ x 9′ x 36′
	280′-0 300′-0	4′ x 9′ x 38′
	320′-0 340′-0	4′ x 10′ x 38′
31 TO 33	160′-0 180′-0 200′-0	4′ x 8′ x 34′
	220′-0 240′-0 260′-0	4′ x 9′ x 36′
	280′-0	4′ x 9′ x 38′
	300′-0 320′-0 340′-0	4′ x 10′ x 38′
34 TO 36	160′-0 180′-0	4′ x 8′ x 34′
	200′-0	4′ x 8′ x 36′
	220′-0 240′-0	4′ x 9′ x 36′
	260′-0	4′ x 9′ x 38′
	280′-0 300′-0 320′-0	4′ x 10′ x 38′
	340′-0	4′ x 10′ x 40′

H IN FT.	℄ - ℄ ABUT. BRG.	FOOTING SIZE
37 TO 40	160′-0	4′ x 8′ x 36′
	180′-0 200′-0 220′-0 240′-0	4′ x 9′ x 36′
	260′-0	4′ x 9′ x 38′
	280′-0 300′-0	4′ x 10′ x 38′
	320′-0 340′-0	4′ x 10′ x 40′

FOOTING SIZE	REINFORCING STEEL (ONE FOOTING)					STRUCTURAL CONCRETE (CY)
	BAR	NO., SIZE & SPACING	LENGTH	WEIGHT (LB.)	TOTAL WEIGHT (LB.)	
4′ x 7′ x 32′	d2	74 - #9 AS SHOWN	9′-11	2495	3602	33.2
	f1	32 - #5 @ 1′-0	6′-8	223		
	f2	7 - #5 @ 1′-0	31′-8	231		
	g1	32 - #6 @ 1′-0	6′-8	320		
	g2	7 - #6 @ 1′-0	31′-8	333		
4′ x 7′ x 34′	d2	74 - #9 AS SHOWN	9′-11	2495	3772	35.3
	f1	34 - #5 @ 1′-0	6′-8	236		
	f2	7 - #5 @ 1′-0	33′-8	246		
	g1	34 - #6 @ 1′-0	6′-8	340		
	g2	9 - #6 @ 0′-9½	33′-8	455		
4′ x 8′ x 34′	d2	74 - #9 AS SHOWN	9′-11	2495	3946	40.3
	f1	34 - #5 @ 1′-0	7′-8	272		
	f2	8 - #5 @ 1′-0	33′-8	281		
	g1	34 - #6 @ 1′-0	7′-8	392		
	g2	10 - #6 @ 0′-10	33′-8	506		
4′ x 8′ x 36′	d2	74 - #9 AS SHOWN	9′-11	2495	4444	42.7
	f1	36 - #5 @ 1′-0	7′-8	288		
	f2	8 - #5 @ 1′-0	35′-8	298		
	g1	36 - #6 @ 1′-0	7′-8	415		
	g2	13 - #7 @ 0′-7½	35′-8	948		
4′ x 9′ x 36′	d2	74 - #9 AS SHOWN	9′-11	2495	4776	48.0
	f1	36 - #5 @ 1′-0	8′-8	325		
	f2	9 - #5 @ 1′-0	35′-8	335		
	g1	44 - #6 @ 0′-9½	8′-8	573		
	g2	11 - #8 @ 0′-10	35′-8	1048		
4′ x 9′ x 38′	d2	74 - #9 AS SHOWN	9′-11	2495	5413	50.7
	f1	38 - #5 @ 1′-0	8′-8	343		
	f2	9 - #5 @ 1′-0	37′-8	354		
	g1	47 - #6 @ 0′-9½	8′-8	612		
	g2	16 - #8 @ 0′-6½	37′-8	1609		
4′ x 10′ x 38′	d2	74 - #9 AS SHOWN	9′-11	2495	5910	56.3
	f1	38 - #5 @ 1′-0	9′-8	383		
	f2	10 - #5 @ 1′-0	37′-8	393		
	g1	47 - #7 @ 0′-9½	9′-8	929		
	g2	17 - #8 @ 0′-7	37′-8	1710		
4′ x 10′ x 40′	d2	74 - #9 AS SHOWN	9′-11	2495	6593	59.3
	f1	40 - #5 @ 1′-0	9′-8	403		
	f2	10 - #5 @ 1′-0	39′-8	414		
	g1	50 - #7 @ 0′-9½	9′-8	988		
	g2	17 - #9 @ 0′-7	39′-8	2293		

NOTE: THE REINFORCING STEEL QUANTITY IS TO BE INCLUDED ON THE SUMMARY QUANTITIES SHEET IN THE PLAN.

NOTE: THE CONCRETE QUANTITY IS TO BE INCLUDED ON THE SUMMARY QUANTITIES SHEET IN THE PLAN.

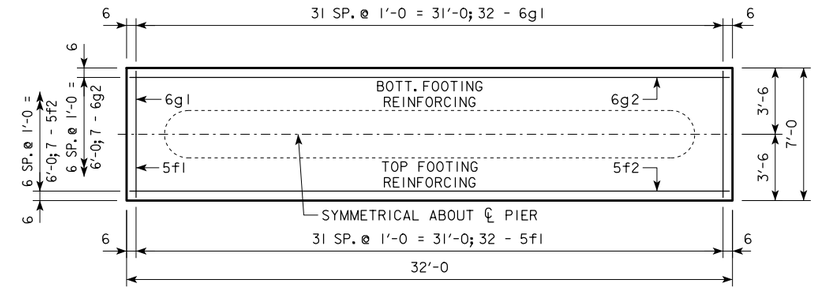

4′-0 x 7′-0 x 32′-0

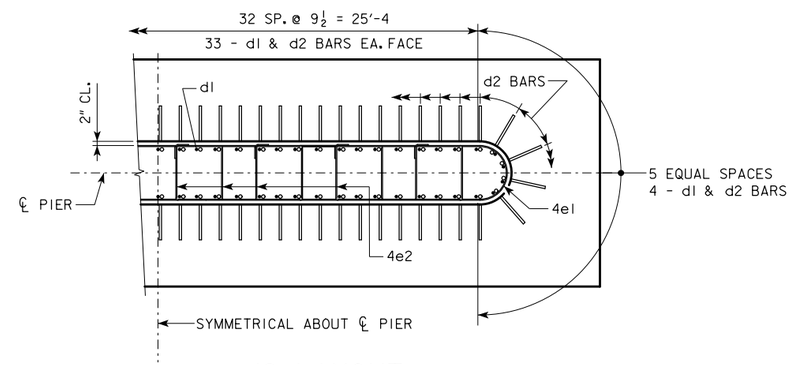

d2 LAYOUT

(SEE SECTION A-A ON SHEET RS40-156-14.)

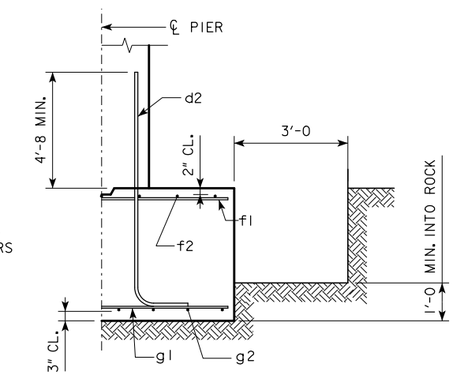

TYPICAL SECTION

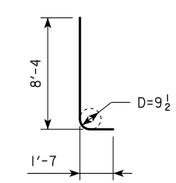

d2

NOTE: D = PIN DIAMETER.
DIMENSIONS ARE OUT TO OUT.

FOOTING NOTES:

THESE SPREAD FOOTINGS ARE DESIGNED AND DETAILED TO BE USED WITH THE CAP AND COLUMN DETAILS OF THE TEE PIERS AS SHOWN ON SHEET RS40-156-14.

THESE SPREAD FOOTINGS SHALL EXTEND AT LEAST 12 INCHES INTO SUITABLE FOUNDATION ROCK AND THE LAST 12 INCHES OF ROCK EXCAVATION SHALL BE TO NEAT LINES OF MASONRY. THE FOUNDATION ROCK SHALL HAVE A MINIMUM LRFD NOMINAL BEARING RESISTANCE OF 30 KIPS PER SQUARE FOOT (ALLOWABLE BEARING VALUE OF AT LEAST 10 KIPS PER SQUARE FOOT).

LATEST REVISION DATE

APPROVED BY BRIDGE ENGINEER

IOWA DOT Highway Division

STANDARD DESIGN - 40′ ROADWAY, 3 SPAN BRIDGES

ROLLED STEEL BEAM BRIDGES

OCTOBER, 2014

TEE PIER - SPREAD FOOTINGS

45° SKEW - SHEET 1

RS40-164-14

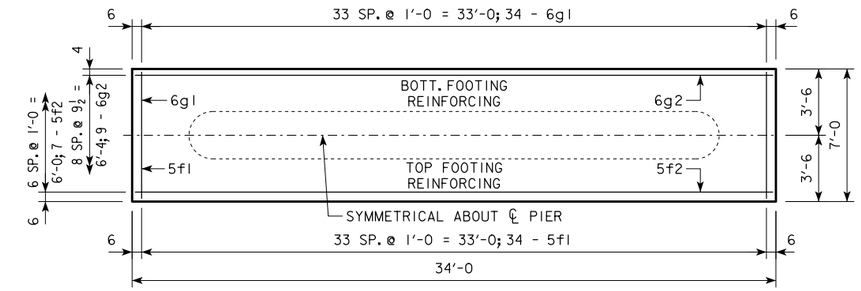

4'-0 x 7'-0 x 34'-0

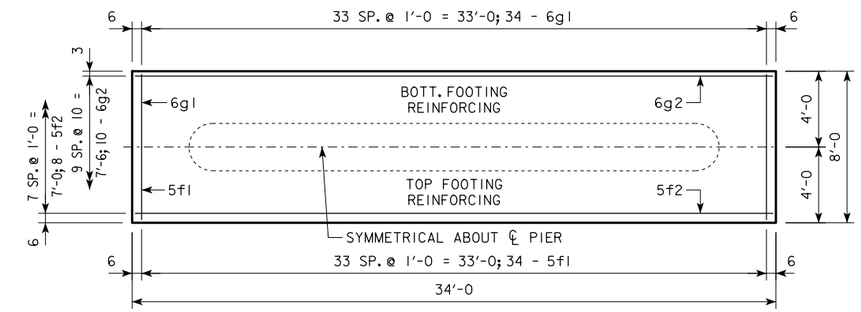

4'-0 x 8'-0 x 34'-0

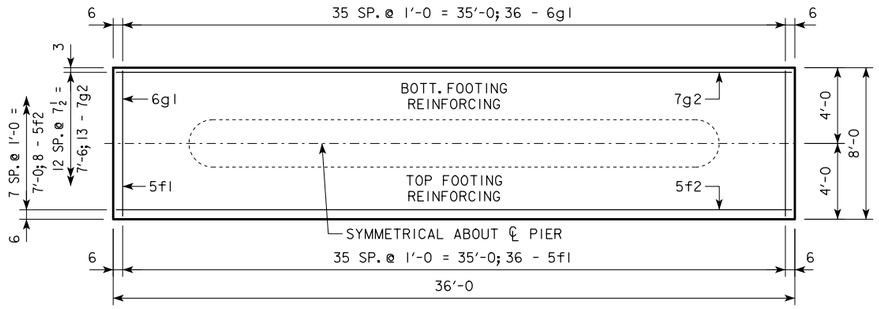

4'-0 x 8'-0 x 36'-0

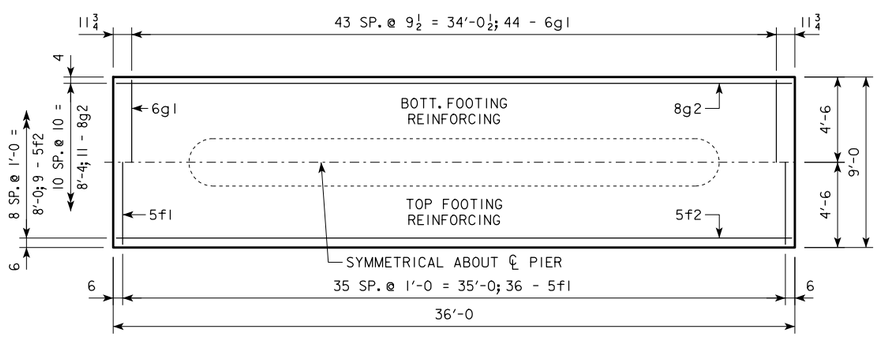

4'-0 x 9'-0 x 36'-0

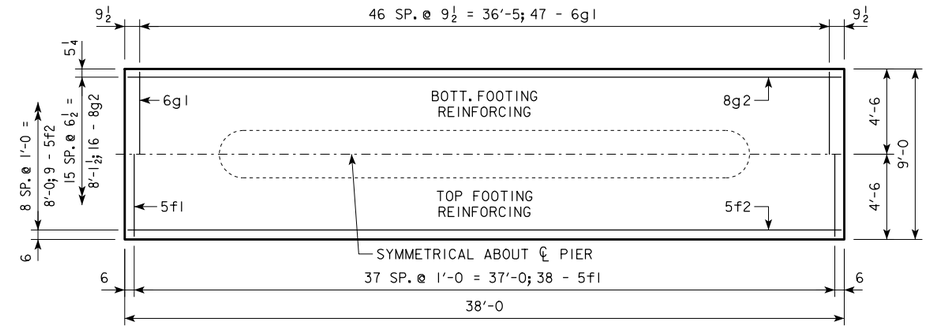

4'-0 x 9'-0 x 38'-0

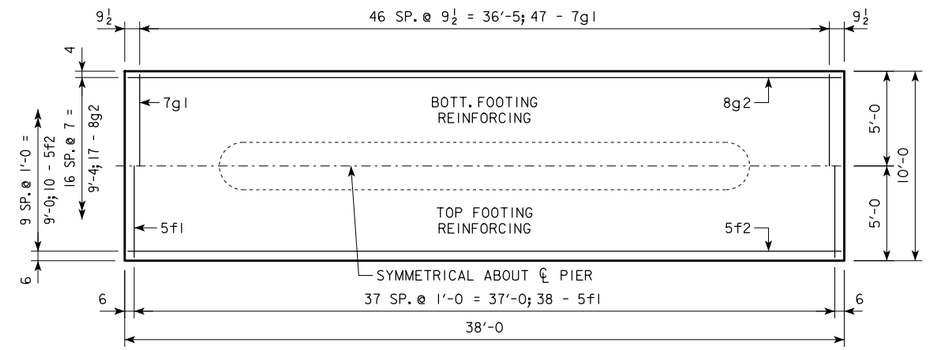

4'-0 x 10'-0 x 38'-0

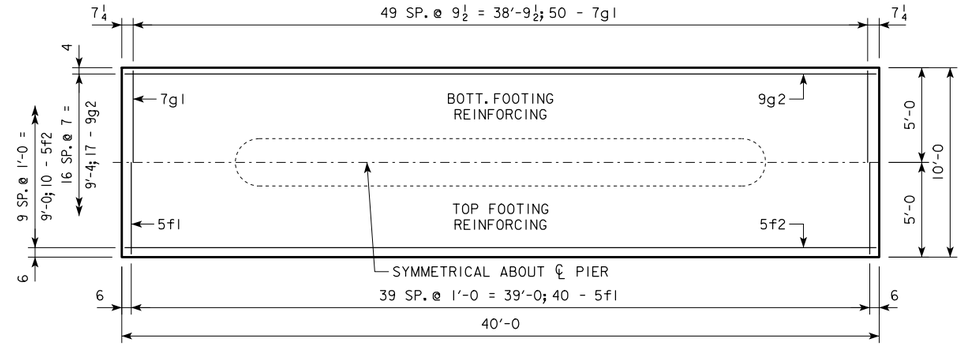

4'-0 x 10'-0 x 40'-0

NOTE:
SEE SHEET RS40-164-14 FOR FOOTING NOTES.

LATEST REVISION DATE

APPROVED BY BRIDGE ENGINEER

IOWA DOT Highway Division

STANDARD DESIGN - 40' ROADWAY, 3 SPAN BRIDGES

ROLLED STEEL BEAM BRIDGES

OCTOBER, 2014

TEE PIER - SPREAD FOOTINGS

45° SKEW - SHEET 2

RS40-165-14

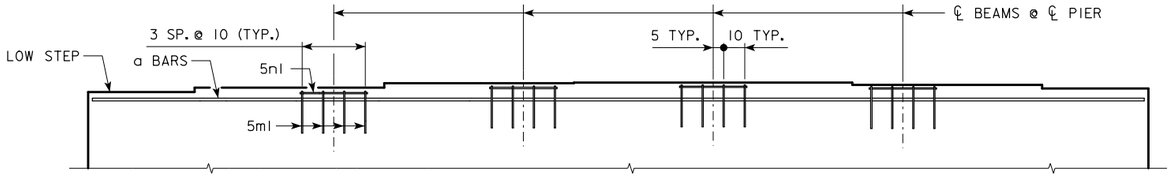

PART ELEVATION VIEW OF PIER CAP

GRADE (G): G <= 2.2%

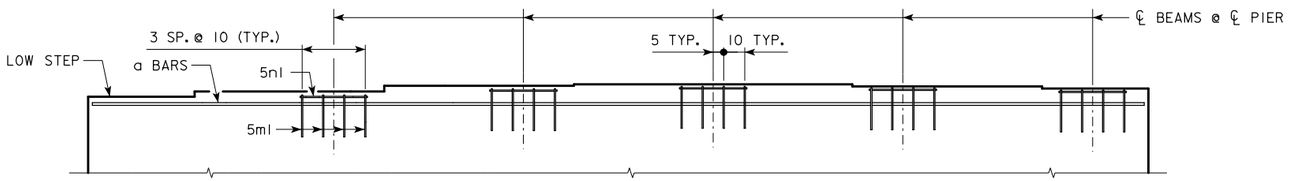

PART ELEVATION VIEW OF PIER CAP

GRADE (G): 2.2% < G <= 5.0%

STEP REINFORCING BAR LIST ONE PIER

			G <= 2.2%			2.2% < G <= 5.0%		
BAR	LENGTH	SHAPE	NO.	SIZE	WEIGHT	NO.	SIZE	WEIGHT
5m1	6'-0	⌐	16	5	100	20	5	125
5n1	2'-10	—	16	5	47	20	5	59
TOTAL (LB.)					147			184

G = GRADE (%)

BENT BAR DETAILS

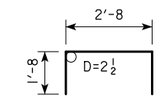

5m1

NOTE: ALL DIMENSIONS ARE OUT TO OUT.
D = PIN DIAMETER.

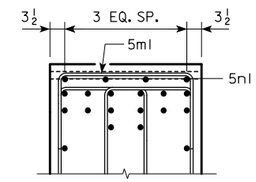

TYPICAL SECTION

NOTE: THE REINFORCING STEEL QUANTITIES ARE TO BE INCLUDED ON THE SUMMARY QUANTITIES SHEET IN THE PLAN.

NOTE: THE CONCRETE QUANTITIES ARE TO BE INCLUDED ON THE SUMMARY QUANTITIES SHEET IN THE PLAN.

NOTES:

THE TABLE BELOW LISTS THE ADDITIONAL CONCRETE VOLUME REQUIRED IN EACH ABUTMENT FOOTING/PIER CAP BASED ON THE ROADWAY GRADE AT EACH ABUTMENT FOOTING/PIER CAP. ADDITIONAL CONCRETE SHOULD BE ADDED TO THE PLANS FOR EACH ABUTMENT FOOTING/PIER CAP THAT HAS 0.5 CU. YDS. OR MORE OF ADDITIONAL CONCRETE. VALUES SHOULD BE EXCLUDED FOR SCENARIOS THAT HAVE LESS THAN 0.5 CU. YDS. OF ADDITIONAL CONCRETE PER SUBSTRUCTURE UNIT. VALUES MAY BE INTERPOLATED FOR GRADES BETWEEN THE VALUES SHOWN IN THE TABLE.

ADDITIONAL CONCRETE VOLUME PER SUBSTRUCTURE UNIT (C.Y.)

	ROADWAY GRADE AT SUBSTRUCTURE UNIT				
	1%	2%	3%	4%	5%
EACH ABUTMENT FOOTING					
160'-0 TO 320'-0 SPANS	--	--	--	0.6	0.8
340'-0 SPAN	--	--	0.5	0.7	0.9
EACH PILE BENT OR TEE PIER CAP					
160'-0 TO 340'-0 SPANS	--	--	--	0.6	0.7

LATEST REVISION DATE

APPROVED BY BRIDGE ENGINEER

IOWA DOT Highway Division

STANDARD DESIGN - 40' ROADWAY, 3 SPAN BRIDGES

ROLLED STEEL BEAM BRIDGES

OCTOBER, 2014

ADDITIONAL QUANTITIES

10° SKEW

RS40-166-14

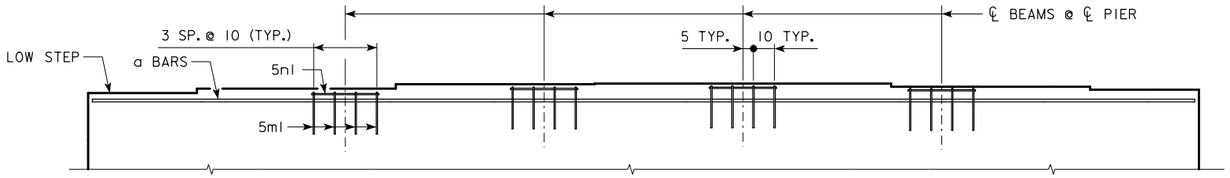

PART ELEVATION VIEW OF PIER CAP
GRADE (G): G <= 1.0%

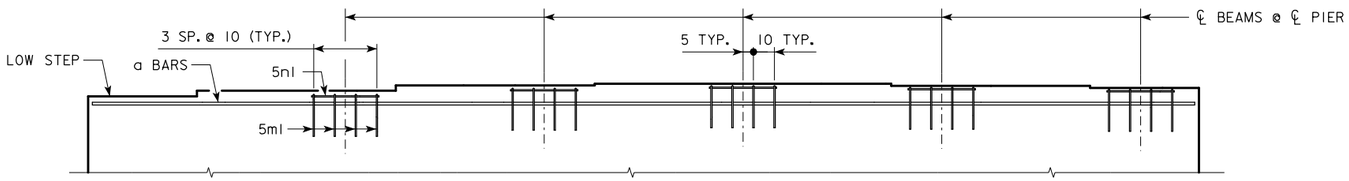

PART ELEVATION VIEW OF PIER CAP
GRADE (G): 1.0% < G <= 2.5%

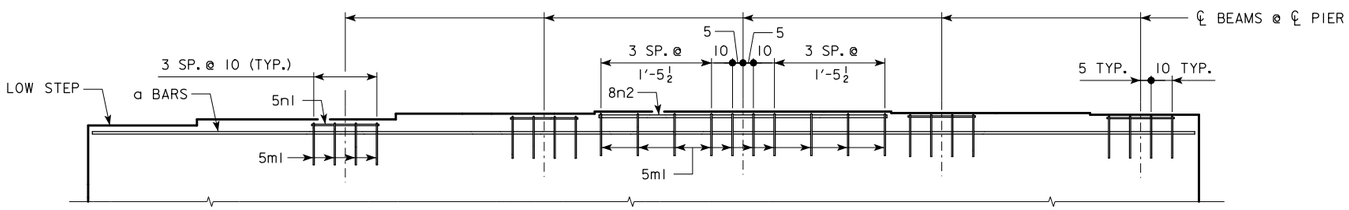

PART ELEVATION VIEW OF PIER CAP
GRADE (G): 2.5% < G <= 3.2%

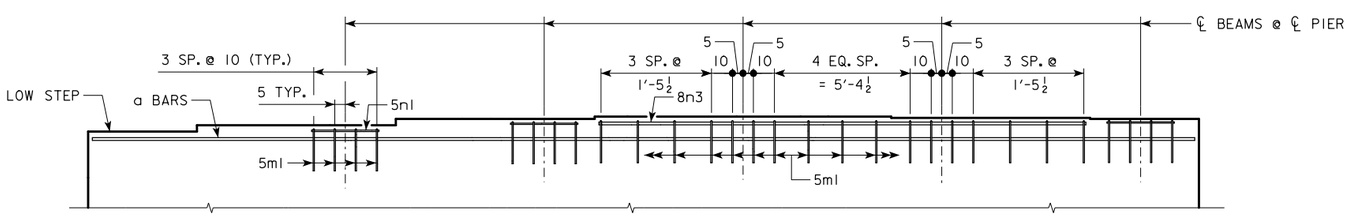

PART ELEVATION VIEW OF PIER CAP
GRADE (G): 3.2% < G <= 3.7%

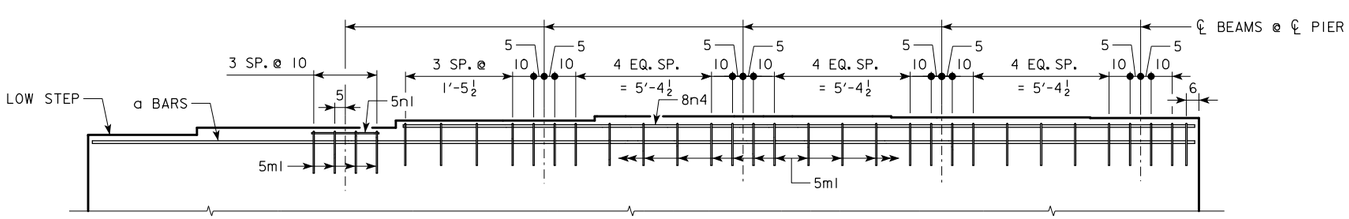

PART ELEVATION VIEW OF PIER CAP
GRADE (G): 3.7% < G <= 5.0%

STEP REINFORCING BAR LIST
ONE PIER

			G <= 1.0%			1.0% < G <= 2.5%			2.5% < G <= 3.2%			3.2% < G <= 3.7%			3.7% < G <= 5.0%		
BAR	LENGTH	SHAPE	NO.	SIZE	WEIGHT	NO.	SIZE	WEIGHT	NO.	SIZE	WEIGHT	NO.	SIZE	WEIGHT	NO.	SIZE	WEIGHT
5m1	6'-2		16	5	103	20	5	129	26	5	167	29	5	187	33	5	212
5n1	2'-10		16	5	47	20	5	59	16	5	47	12	5	35	4	5	12
8n2	11'-5		--	--	--	--	--	--	4	8	122	--	--	--	--	--	--
8n3	19'-3		--	--	--	--	--	--	--	--	--	4	8	206	--	--	--
8n4	31'-5		--	--	--	--	--	--	--	--	--	--	--	--	4	8	336
TOTAL (LB.)					150			188			336			428			560

G = GRADE (%)

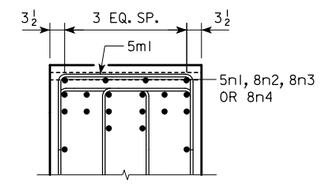

TYPICAL SECTION

BENT BAR DETAILS

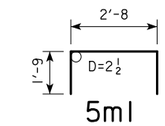

NOTE: ALL DIMENSIONS ARE OUT TO OUT.
D = PIN DIAMETER.

NOTE: THE REINFORCING STEEL QUANTITIES ARE TO BE INCLUDED ON THE SUMMARY QUANTITIES SHEET IN THE PLAN.

NOTE: THE CONCRETE QUANTITIES ARE TO BE INCLUDED ON THE SUMMARY QUANTITIES SHEET IN THE PLAN.

NOTES:

THE TABLE BELOW LISTS THE ADDITIONAL CONCRETE VOLUME REQUIRED IN EACH ABUTMENT FOOTING/PIER CAP BASED ON THE ROADWAY GRADE AT EACH ABUTMENT FOOTING/PIER CAP. ADDITIONAL CONCRETE SHOULD BE ADDED TO THE PLANS FOR EACH ABUTMENT FOOTING/PIER CAP THAT HAS 0.5 CU. YDS. OR MORE OF ADDITIONAL CONCRETE. VALUES SHOULD BE EXCLUDED FOR SCENARIOS THAT HAVE LESS THAN 0.5 CU. YDS. OF ADDITIONAL CONCRETE PER SUBSTRUCTURE UNIT. VALUES MAY BE INTERPOLATED FOR GRADES BETWEEN THE VALUES SHOWN IN THE TABLE.

ADDITIONAL CONCRETE VOLUME PER SUBSTRUCTURE UNIT (C.Y.)

	ROADWAY GRADE AT SUBSTRUCTURE UNIT				
	1%	2%	3%	4%	5%
EACH ABUTMENT FOOTING					
160'-0 TO 320'-0 SPANS	--	0.6	1.0	1.3	1.7
340'-0 SPANS	--	0.7	1.2	1.6	2.0
EACH PILE BENT OR TEE PIER CAP					
160'-0 TO 340'-0 SPANS	--	0.6	0.9	1.2	1.6

LATEST REVISION DATE

APPROVED BY BRIDGE ENGINEER

IOWA DOT Highway Division

STANDARD DESIGN - 40' ROADWAY, 3 SPAN BRIDGES

ROLLED STEEL BEAM BRIDGES

OCTOBER, 2014

ADDITIONAL QUANTITIES

20° SKEW

RS40-167-14

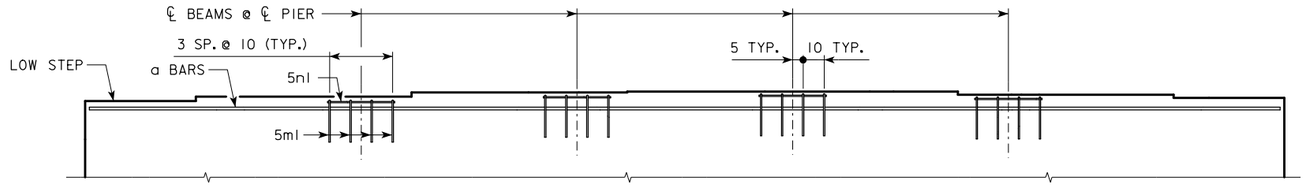

PART ELEVATION VIEW OF PIER CAP
GRADE (G): G <= 0.6%

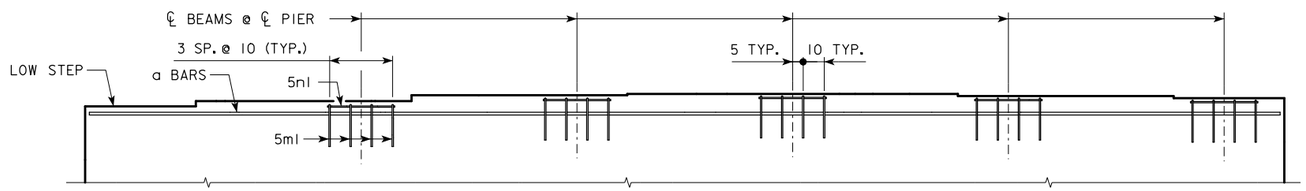

PART ELEVATION VIEW OF PIER CAP
GRADE (G): 0.6% < G <= 1.5%

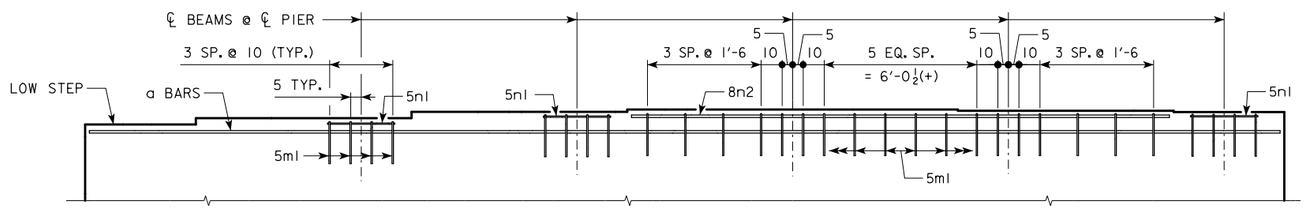

PART ELEVATION VIEW OF PIER CAP
GRADE (G): 1.5% < G <= 2.3%

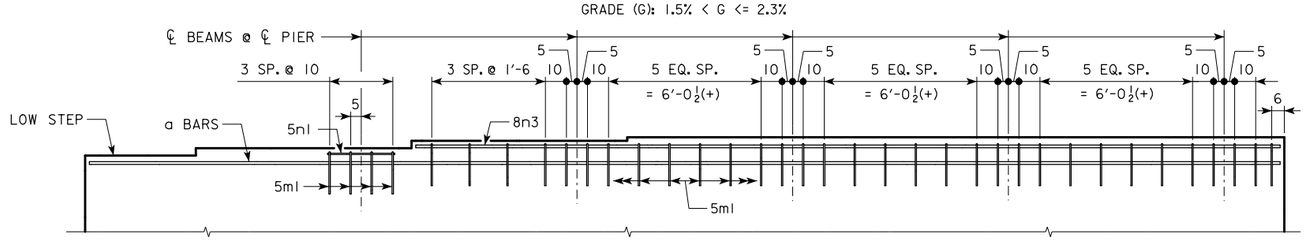

PART ELEVATION VIEW OF PIER CAP
GRADE (G): 2.3% < G <= 3.4%

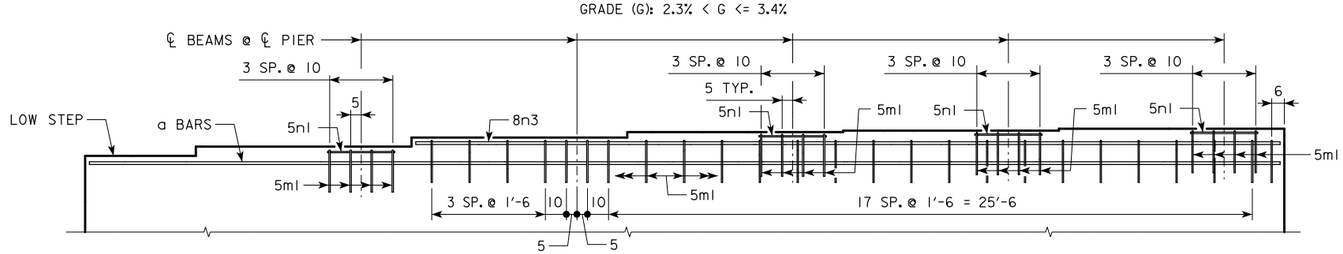

PART ELEVATION VIEW OF PIER CAP
GRADE (G): 3.4% < G <= 5.0%

STEP REINFORCING BAR LIST
ONE PIER

			G <= 0.6%			0.6% < G <= 1.5%			1.5% < G <= 2.3%			2.3% < G <= 3.4%			3.4% < G <= 5.0%		
BAR	LENGTH	SHAPE	NO.	SIZE	WEIGHT	NO.	SIZE	WEIGHT	NO.	SIZE	WEIGHT	NO.	SIZE	WEIGHT	NO.	SIZE	WEIGHT
5m1	6'-6	⌐	16	5	108	20	5	136	30	5	203	36	5	244	41	5	278
5n1	2'-10	—	16	5	47	20	5	59	12	5	35	4	5	12	16	5	47
8n2	21'-3	—	--	--	--	--	--	--	4	8	227	--	--	--	--	--	--
8n3	34'-2	—	--	--	--	--	--	--	--	--	--	4	8	365	4	8	355
TOTAL (LB.)					155			195			465			621			680

G = GRADE (%)

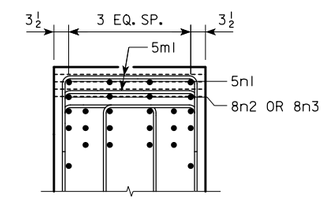

TYPICAL SECTION

BENT BAR DETAILS

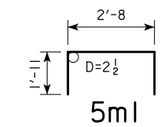

NOTE: ALL DIMENSIONS ARE OUT TO OUT.
D = PIN DIAMETER.

NOTE: THE REINFORCING STEEL QUANTITIES ARE TO BE INCLUDED ON THE SUMMARY QUANTITIES SHEET IN THE PLAN.

NOTE: THE CONCRETE QUANTITIES ARE TO BE INCLUDED ON THE SUMMARY QUANTITIES SHEET IN THE PLAN.

NOTES:

THE TABLE BELOW LISTS THE ADDITIONAL CONCRETE VOLUME REQUIRED IN EACH ABUTMENT FOOTING/PIER CAP BASED ON THE ROADWAY GRADE AT EACH ABUTMENT FOOTING/PIER CAP. ADDITIONAL CONCRETE SHOULD BE ADDED TO THE PLANS FOR EACH ABUTMENT FOOTING/PIER CAP THAT HAS 0.5 CU. YDS. OR MORE OF ADDITIONAL CONCRETE. VALUES SHOULD BE EXCLUDED FOR SCENARIOS THAT HAVE LESS THAN 0.5 CU. YDS. OF ADDITIONAL CONCRETE PER SUBSTRUCTURE UNIT. VALUES MAY BE INTERPOLATED FOR GRADES BETWEEN THE VALUES SHOWN IN THE TABLE.

ADDITIONAL CONCRETE VOLUME PER SUBSTRUCTURE UNIT (C.Y.)

	ROADWAY GRADE AT SUBSTRUCTURE UNIT				
	1%	2%	3%	4%	5%
EACH ABUTMENT FOOTING					
160'-0 TO 320'-0 SPANS	--	1.0	1.6	2.3	2.9
340'-0 SPANS	0.5	1.3	2.0	2.7	3.5
EACH PILE BENT OR TEE PIER CAP					
160'-0 TO 340'-0 SPANS	--	1.0	1.6	2.1	2.8

LATEST REVISION DATE

APPROVED BY BRIDGE ENGINEER

IOWA DOT Highway Division

STANDARD DESIGN - 40' ROADWAY, 3 SPAN BRIDGES

ROLLED STEEL BEAM BRIDGES

OCTOBER, 2014

ADDITIONAL QUANTITIES

30° SKEW

RS40-168-14

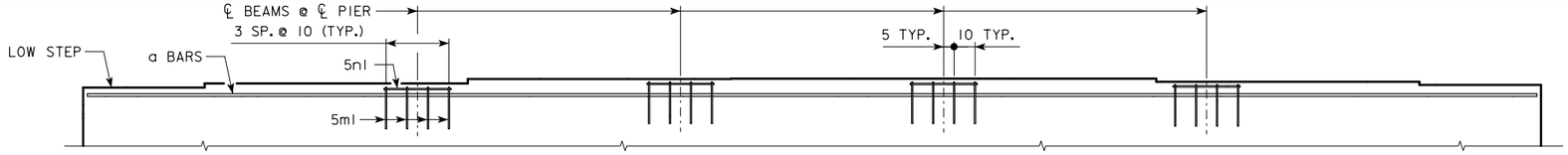

PART ELEVATION VIEW OF PIER CAP
GRADE (G): G <= 0.3%

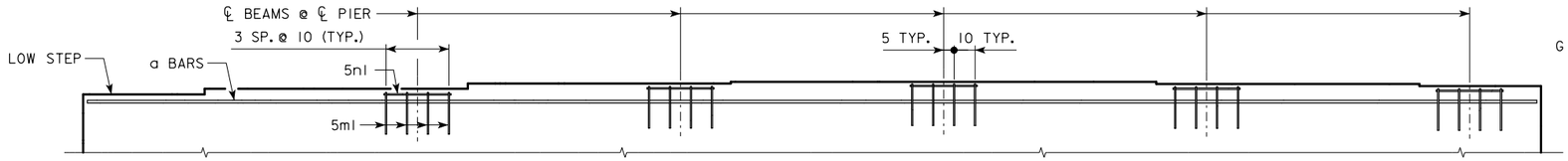

PART ELEVATION VIEW OF PIER CAP
GRADE (G): 0.3% < G <= 0.9%

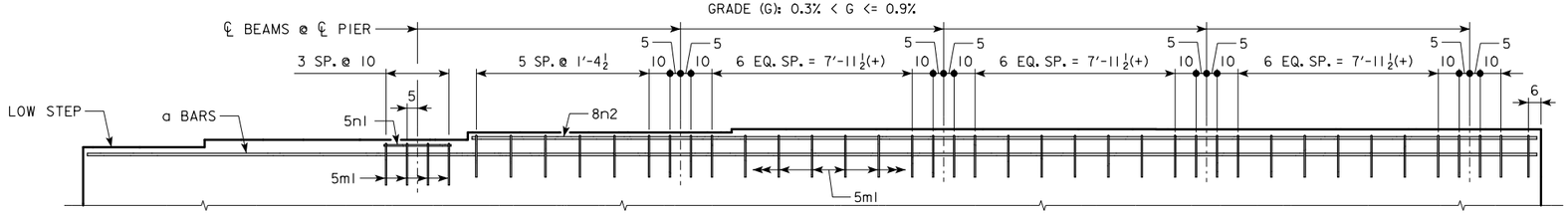

PART ELEVATION VIEW OF PIER CAP
GRADE (G): 0.9% < G <= 1.9%

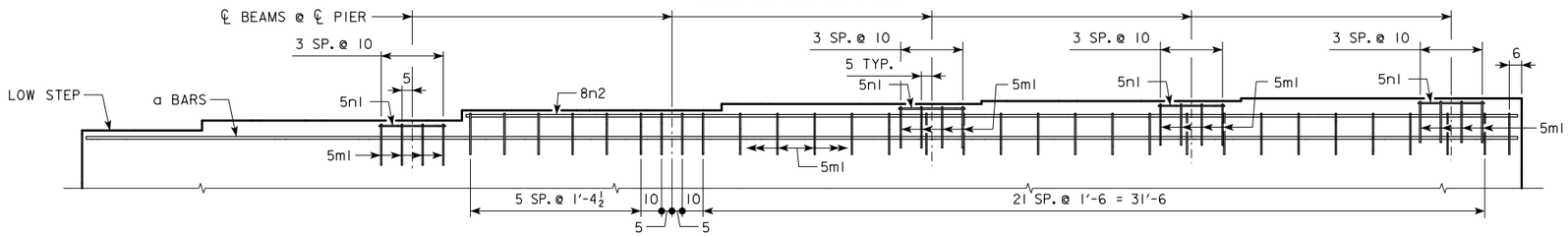

PART ELEVATION VIEW OF PIER CAP
GRADE (G): 1.9% < G <= 3.5%

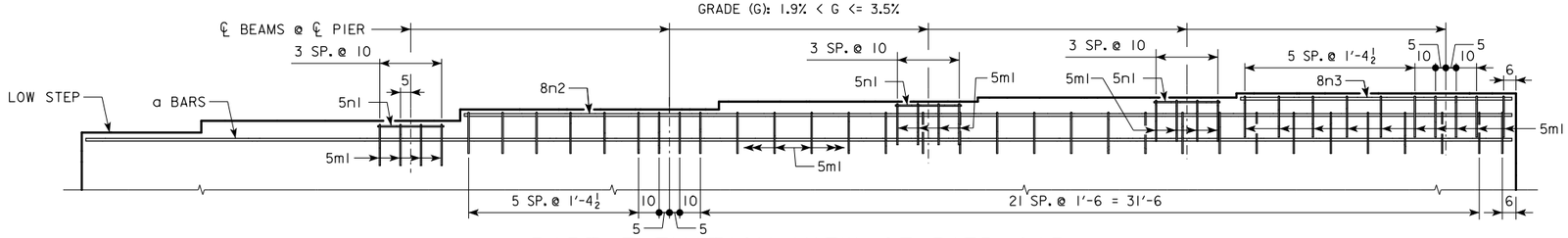

PART ELEVATION VIEW OF PIER CAP
GRADE (G): 3.5% < G <= 4.3%

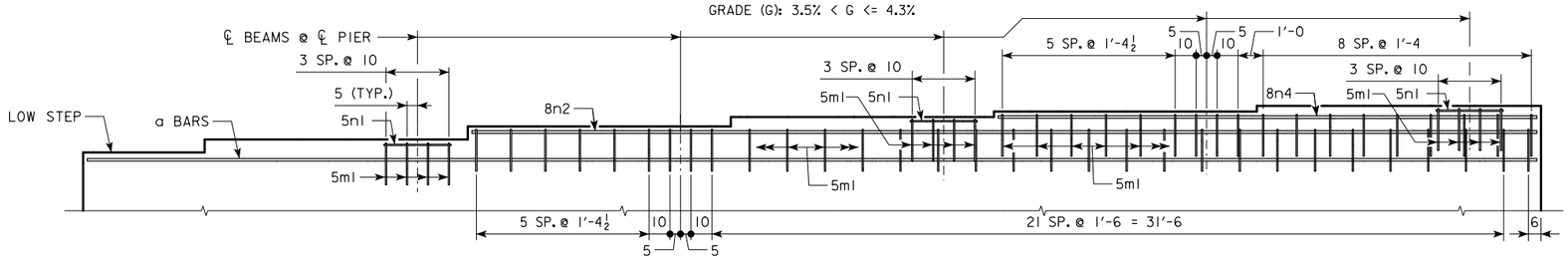

PART ELEVATION VIEW OF PIER CAP
GRADE (G): 4.3% < G <= 5.0%

G = GRADE (%)

STEP REINFORCING BAR LIST ONE PIER

			G <= 0.3%			0.3% < G <= 0.9%			0.9% < G <= 1.9%		
BAR	LENGTH	SHAPE	NO.	SIZE	WEIGHT	NO.	SIZE	WEIGHT	NO.	SIZE	WEIGHT
5m1	7'-0	⌐	16	5	117	20	5	146	41	5	299
5n1	2'-10	—	16	5	47	20	5	59	4	5	12
8n2	42'-4	—	--	--	--	--	--	--	4	8	452
8n3	10'-11	—	--	--	--	--	--	--	--	--	--
8n4	21'-5	—	--	--	--	--	--	--	--	--	--
TOTAL (LB.)					164			205			763

STEP REINFORCING BAR LIST ONE PIER

			1.9% < G <= 3.5%			3.5% < G <= 4.3%			4.3% < G <= 5.0%		
BAR	LENGTH	SHAPE	NO.	SIZE	WEIGHT	NO.	SIZE	WEIGHT	NO.	SIZE	WEIGHT
5m1	7'-0	⌐	47	5	343	53	5	387	61	5	445
5n1	2'-10	—	16	5	47	12	5	35	12	5	35
8n2	42'-4	—	4	8	452	4	8	452	4	8	452
8n3	10'-11	—	--	--	--	4	8	117	--	--	--
8n4	21'-5	—	--	--	--	--	--	--	4	8	229
TOTAL (LB.)					842			991			1161

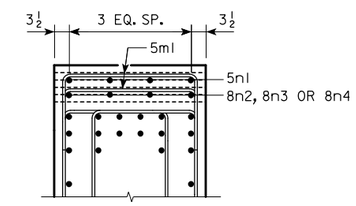

TYPICAL SECTION

BENT BAR DETAILS

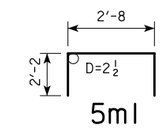

NOTE: ALL DIMENSIONS ARE OUT TO OUT.
D = PIN DIAMETER.

NOTE: THE REINFORCING STEEL QUANTITIES ARE TO BE INCLUDED ON THE SUMMARY QUANTITIES SHEET IN THE PLAN.

NOTE: THE CONCRETE QUANTITIES ARE TO BE INCLUDED ON THE SUMMARY QUANTITIES SHEET IN THE PLAN.

NOTES:

THE TABLE BELOW LISTS THE ADDITIONAL CONCRETE VOLUME REQUIRED IN EACH ABUTMENT FOOTING/PIER CAP BASED ON THE ROADWAY GRADE AT EACH ABUTMENT FOOTING/PIER CAP. ADDITIONAL CONCRETE SHOULD BE ADDED TO THE PLANS FOR EACH ABUTMENT FOOTING/PIER CAP THAT HAS 0.5 CU. YDS. OR MORE OF ADDITIONAL CONCRETE. VALUES SHOULD BE EXCLUDED FOR SCENARIOS THAT HAVE LESS THAN 0.5 CU. YDS. OF ADDITIONAL CONCRETE PER SUBSTRUCTURE UNIT. VALUES MAY BE INTERPOLATED FOR GRADES BETWEEN THE VALUES SHOWN IN THE TABLE.

ADDITIONAL CONCRETE VOLUME PER SUBSTRUCTURE UNIT (C.Y.)

	ROADWAY GRADE AT SUBSTRUCTURE UNIT				
	1%	2%	3%	4%	5%
EACH ABUTMENT FOOTING					
160'-0 TO 320'-0 SPANS	0.9	2.2	3.6	5.0	6.4
340'-0 SPANS	1.1	2.5	4.1	5.7	7.3
EACH PILE BENT OR TEE PIER CAP					
160'-0 TO 340'-0 SPANS	0.9	2.1	3.4	4.7	6.0

LATEST REVISION DATE

APPROVED BY BRIDGE ENGINEER

IOWA DOT Highway Division

STANDARD DESIGN - 40' ROADWAY, 3 SPAN BRIDGES

ROLLED STEEL BEAM BRIDGES

OCTOBER, 2014

ADDITIONAL QUANTITIES

45° SKEW

RS40-169-14

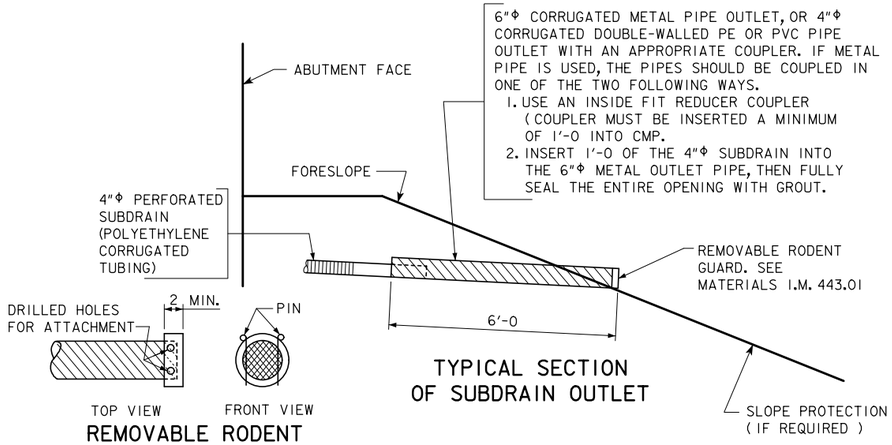

OUTLET DETAILS

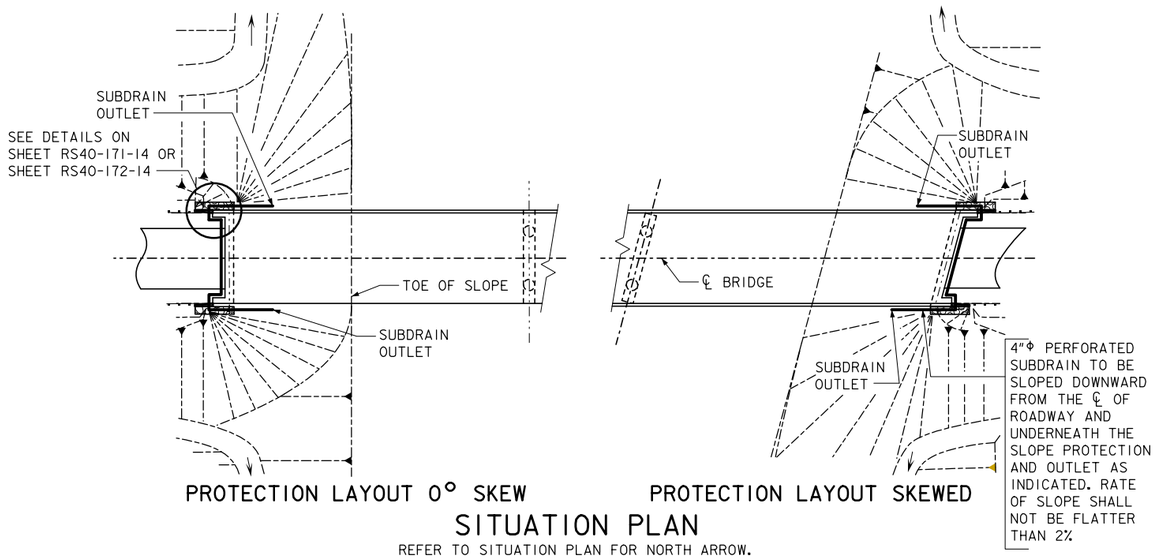

PROTECTION LAYOUT 0° SKEW

PROTECTION LAYOUT SKEWED

SITUATION PLAN

REFER TO SITUATION PLAN FOR NORTH ARROW.

NOTE:
SEE ABUTMENT BACKFILL DETAILS SHEET FOR DETAILS NOT SHOWN ON THIS SHEET WHICH ARE PERTINENT TO THIS STRUCTURE.

03-15
LATEST REVISION DATE

APPROVED BY BRIDGE ENGINEER

IOWA DOT Highway Division

STANDARD DESIGN - 40' ROADWAY, 3 SPAN BRIDGES

ROLLED STEEL BEAM BRIDGES

OCTOBER, 2014

SUBDRAIN DETAILS

RS40-170-14

REVISED 03-15: CORRECTED THE CALLOUT "SHEET RS40-171-14 OR SHEET RS40-172-14" IT WAS IN ERROR CALLING OUT "SHEET H40-90-06 OR SHEET H40-91-06".

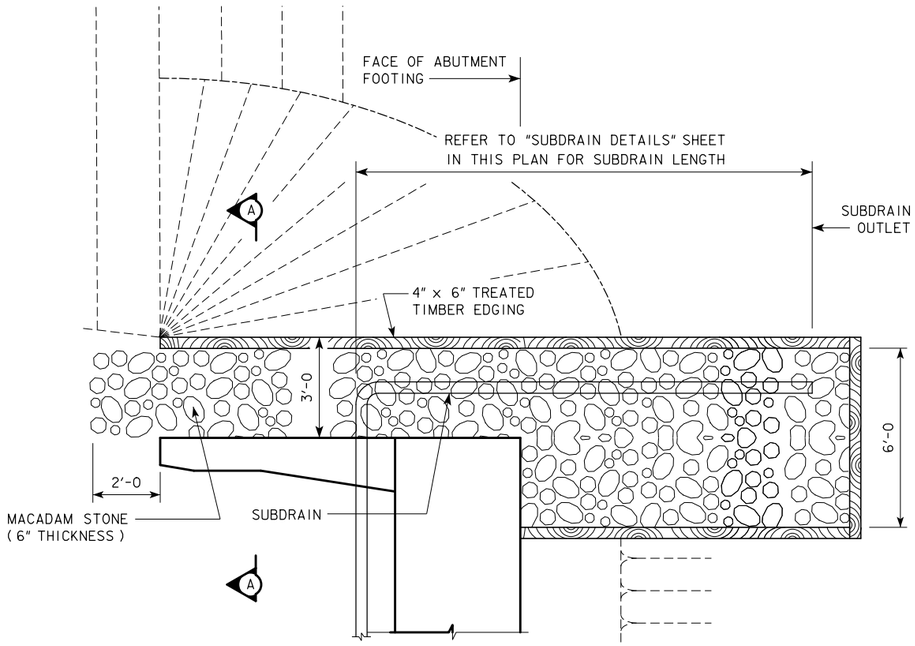

TOP VIEW OF WING ARMORING

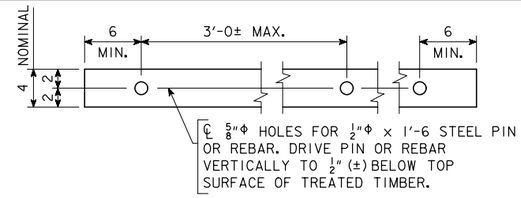

4" x 6" TREATED TIMBER EDGING DETAILS

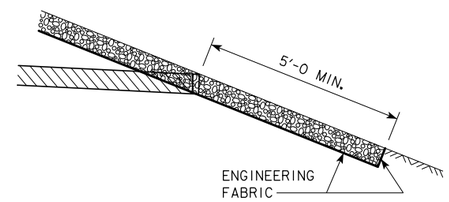

TYPICAL SECTION OF SUBDRAIN OUTLET

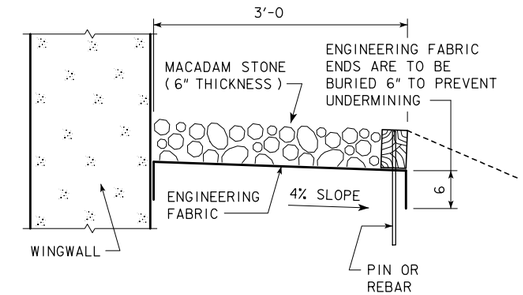

SECTION A-A

NOTE: THESE DETAILS TO BE USED FOR 160'-0 TO 320'-0 BRIDGE LENGTHS.

GENERAL NOTES:

MACADAM STONE SHALL BE PLACED ALONG THE SIDE OF THE WING AND ABUTMENT FOOTING AS SHOWN IN SECTION A-A. THIS IS TYPICAL AT EACH CORNER OF THE BRIDGE UNLESS OTHERWISE NOTED IN THE PLANS. THE MACADAM STONE AT THESE LOCATIONS SHALL BE UNDERLAYED WITH ENGINEERING FABRIC IN ACCORDANCE WITH ARTICLE 4196.01, B, 3, OF THE STANDARD SPECIFICATIONS.

THE MACADAM STONE SHALL BE IN ACCORDANCE WITH SECTION 4122, OF THE STANDARD SPECIFICATIONS, COARSE MATERIAL (NO CHOKE STONE IS ALLOWED).

WOOD PRESERVATIVE TREATMENT FOR THE TIMBER EDGING SHALL MEET THE REQUIREMENTS FOR GUARDRAIL POSTS, SAWED FOUR SIDES, IN ACCORDANCE WITH SECTION 4161, OF THE STANDARD SPECIFICATIONS.

THE MACADAM STONE SHALL BE DEPOSITED, SPREAD, CONSOLIDATED AND SHAPED BY MECHANICAL OR HAND METHODS THAT WILL PROVIDE UNIFORM 6" DEPTH AND DENSITY AND PROVIDE UNIFORM SURFACE APPEARANCE.

PAYMENT FOR THE BRIDGE WING ARMORING WILL BE BID PER SQUARE YARD. COST WILL INCLUDE ENGINEERING FABRIC, MACADAM STONE, TREATED TIMBER EDGING, EXCAVATION, SHAPING AND COMPACTION TO DIMENSIONS SHOWN IN THESE PLANS. BID ITEM SHALL BE "BRIDGE WING ARMORING - MACADAM STONE".

THE MACADAM STONE USED IN THE BRIDGE WING ARMORING DETAILS SHALL NOT BE SUBSTITUTED WITH REVETMENT MATERIAL. IF CLASS B OR CLASS E REVETMENT IS PRESENT, THE CONTRACTOR SHALL REMOVE THE REVETMENT TO THE ARMORING DIMENSIONS. THE REMOVED REVETMENT SHALL BE PLACED AS DIRECTED BY THE ENGINEER. IN ADDITION, A CHECK SHALL BE MADE AT THE SUBDRAIN OUTLET TO INSURE THAT IT IS DRAINING PROPERLY DURING THE BACKFILL FLOODING PROCESS.

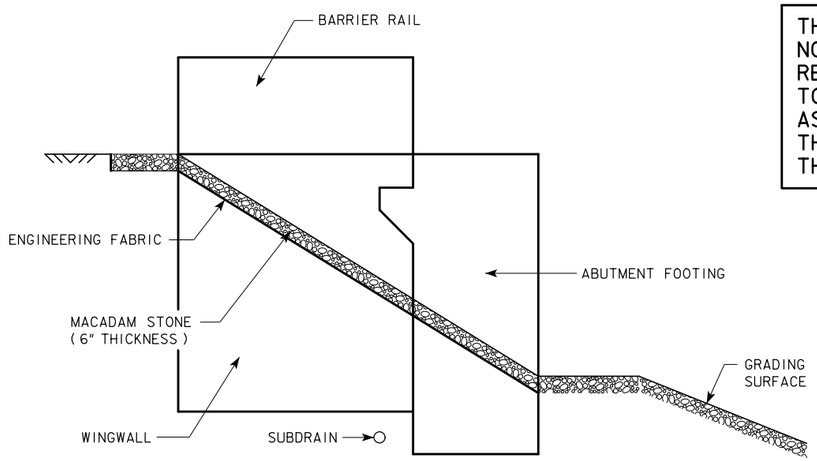

PROFILE VIEW OF WING ARMORING

(SHOWN FOR INTEGRAL ABUTMENT)

NOTE: WING ARMORING QUANTITIES ARE SHOWN ON THE RS40-031-14 THRU RS40-035-14 STANDARD SHEETS.

LATEST REVISION DATE

APPROVED BY BRIDGE ENGINEER

IOWA DOT Highway Division

STANDARD DESIGN - 40' ROADWAY, 3 SPAN BRIDGES

ROLLED STEEL BEAM BRIDGES

OCTOBER, 2014

160'-0 TO 320'-0 BRIDGE WING ARMORING DETAILS

RS40-171-14

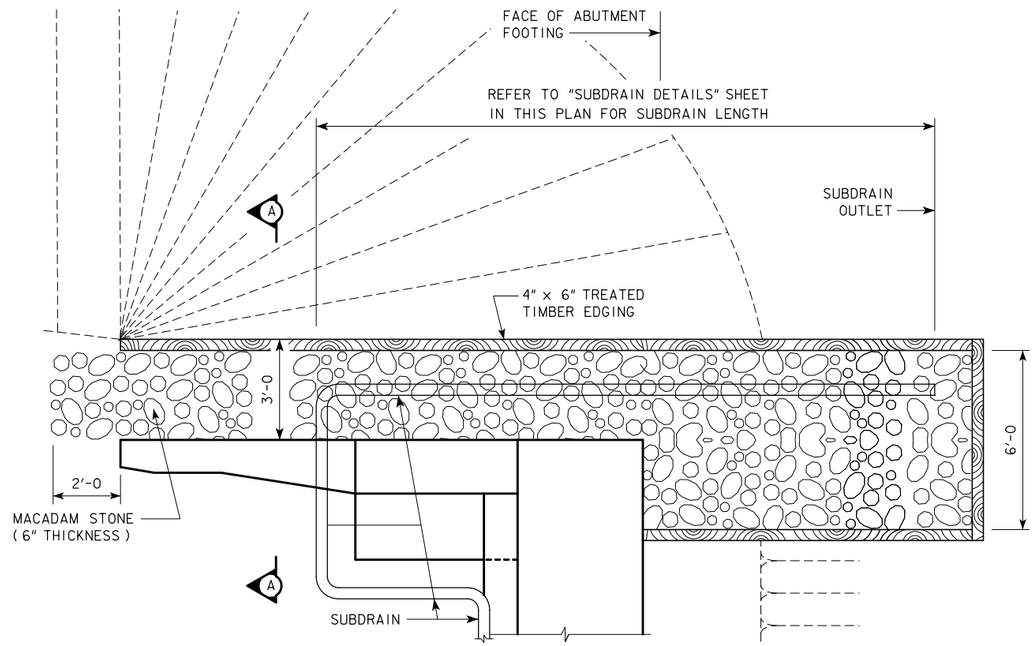

TOP VIEW OF WING ARMORING WITH WING EXTENSION

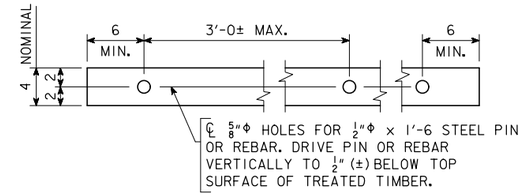

4" x 6" TREATED TIMBER EDGING DETAILS

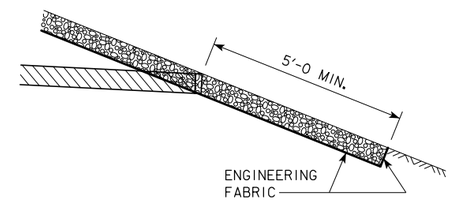

TYPICAL SECTION OF SUBDRAIN OUTLET

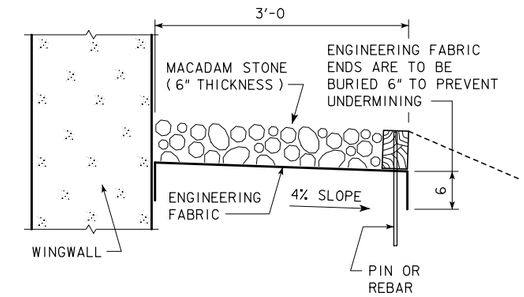

SECTION A-A

NOTE: THESE DETAILS TO BE USED FOR 340'-0 BRIDGE LENGTH.

THE MACADAM STONE USED IN THE BRIDGE WING ARMORING DETAILS SHALL NOT BE SUBSTITUTED WITH REVETMENT MATERIAL. IF CLASS B OR CLASS E REVETMENT IS PRESENT, THE CONTRACTOR SHALL REMOVE THE REVETMENT TO THE ARMORING DIMENSIONS. THE REMOVED REVETMENT SHALL BE PLACED AS DIRECTED BY THE ENGINEER. IN ADDITION, A CHECK SHALL BE MADE AT THE SUBDRAIN OUTLET TO INSURE THAT IT IS DRAINING PROPERLY DURING THE BACKFILL FLOODING PROCESS.

GENERAL NOTES:

MACADAM STONE SHALL BE PLACED ALONG THE SIDE OF THE WING AND ABUTMENT FOOTING AS SHOWN IN SECTION A-A. THIS IS TYPICAL AT EACH CORNER OF THE BRIDGE UNLESS OTHERWISE NOTED IN THE PLANS. THE MACADAM STONE AT THESE LOCATIONS SHALL BE UNDERLAYED WITH ENGINEERING FABRIC IN ACCORDANCE WITH ARTICLE 4196.01, B, 3, OF THE STANDARD SPECIFICATIONS.

THE MACADAM STONE SHALL BE IN ACCORDANCE WITH SECTION 4122, OF THE STANDARD SPECIFICATIONS, COARSE MATERIAL (NO CHOKE STONE IS ALLOWED).

WOOD PRESERVATIVE TREATMENT FOR THE TIMBER EDGING SHALL MEET THE REQUIREMENTS FOR GUARDRAIL POSTS, SAWED FOUR SIDES, IN ACCORDANCE WITH SECTION 4161, OF THE STANDARD SPECIFICATIONS.

THE MACADAM STONE SHALL BE DEPOSITED, SPREAD, CONSOLIDATED AND SHAPED BY MECHANICAL OR HAND METHODS THAT WILL PROVIDE UNIFORM 6" DEPTH AND DENSITY AND PROVIDE UNIFORM SURFACE APPEARANCE.

PAYMENT FOR THE BRIDGE WING ARMORING WILL BE BID PER SQUARE YARD. COST WILL INCLUDE ENGINEERING FABRIC, MACADAM STONE, TREATED TIMBER EDGING, EXCAVATION, SHAPING AND COMPACTION TO DIMENSIONS SHOWN IN THESE PLANS. BID ITEM SHALL BE "BRIDGE WING ARMORING - MACADAM STONE".

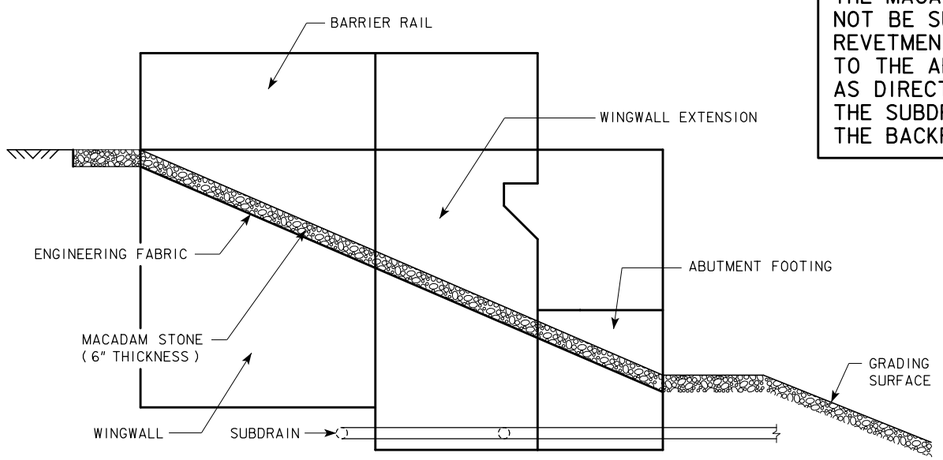

PROFILE VIEW OF WING ARMORING WITH WING EXTENSION

(SHOWN FOR INTEGRAL ABUTMENT WITH WING EXTENSIONS)

NOTE: WING ARMORING QUANTITIES ARE SHOWN ON THE RS40-031-14 THRU RS40-035-14 STANDARD SHEETS.

LATEST REVISION DATE

APPROVED BY BRIDGE ENGINEER

IOWA DOT Highway Division

STANDARD DESIGN - 40' ROADWAY, 3 SPAN BRIDGES

ROLLED STEEL BEAM BRIDGES

OCTOBER, 2014

340'-0 BRIDGE WING ARMORING DETAILS

RS40-172-14

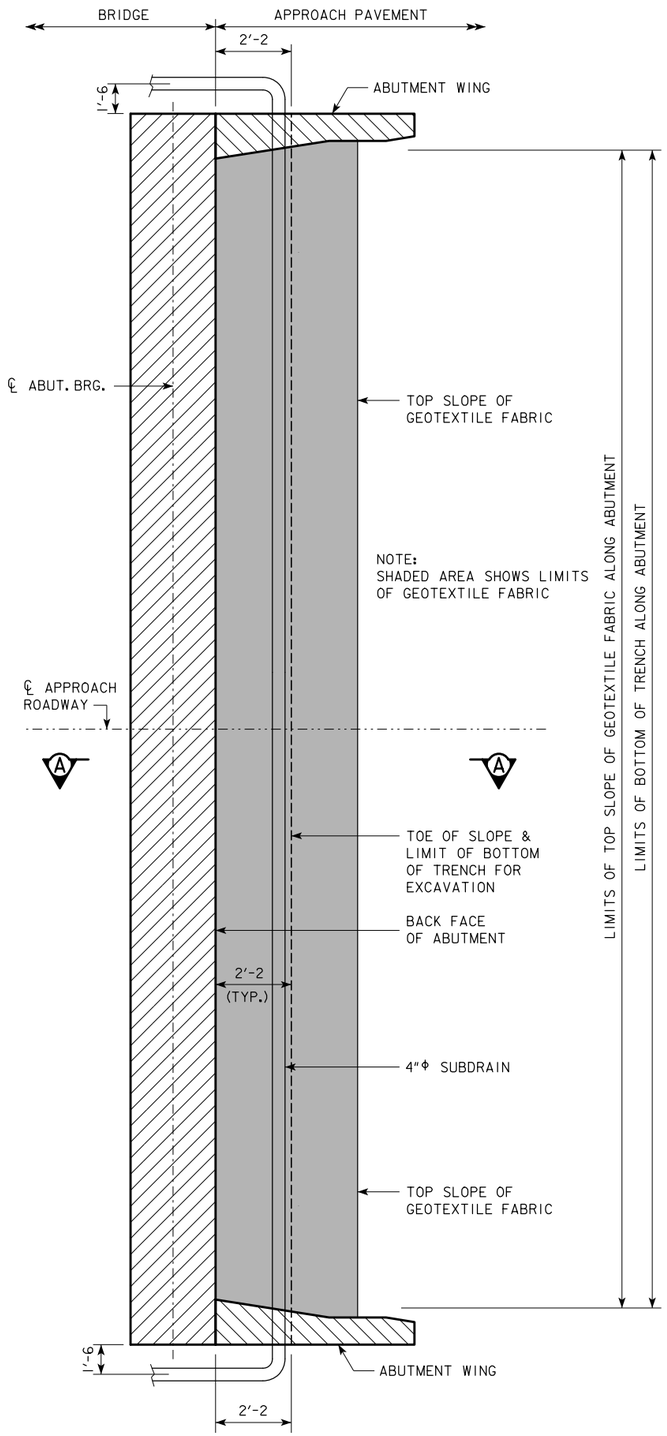

ABUTMENT PLAN WITHOUT WING EXTENSIONS

NOTE: THESE DETAILS TO BE USED FOR 160'-0 TO 320'-0 BRIDGE LENGTHS.

ABUTMENT BACKFILL PROCESS:

THE BASE OF THE EXCAVATION SUBGRADE BEHIND THE ABUTMENT IS TO BE GRADED WITH A 4% SLOPE AWAY FROM THE ABUTMENT FOOTING AND A 2% CROSS SLOPE IN THE DIRECTION OF THE SUBDRAIN OUTLET. THIS EXCAVATION SHAPING IS TO BE DONE PRIOR TO BEGINNING INSTALLATION OF THE GEOTEXTILE AND BACKFILL MATERIAL.

AFTER THE SUBGRADE HAS BEEN SHAPED, THE GEOTEXTILE FABRIC SHALL BE INSTALLED IN ACCORDANCE WITH THE DETAILS SHOWN. THE FABRIC IS INTENDED TO BE INSTALLED IN THE BASE OF THE EXCAVATION AND EXTENDED VERTICALLY UP THE ABUTMENT BACKWALL, ABUTMENT WING WALLS, AND EXCAVATION FACE TO A HEIGHT THAT WILL BE APPROXIMATELY 1 TO 2 FOOT HIGHER THAN THE HEIGHT OF THE POROUS BACKFILL PLACEMENT AS SHOWN IN THE "BACKFILL DETAILS" ON THIS SHEET. THE STRIPS OF THE FABRIC PLACED SHALL OVERLAP APPROXIMATELY 1 FOOT AND SHALL BE PINNED IN PLACE. THE FABRIC SHALL BE ATTACHED TO THE ABUTMENT BY USING LATH FOLDED IN THE FABRIC AND SECURED TO THE CONCRETE WITH SHALLOW CONCRETE NAILS. THE FABRIC PLACED AGAINST THE EXCAVATION FACE SHALL BE PINNED.

WHEN THE FABRIC IS IN PLACE, THE SUBDRAIN SHALL BE INSTALLED DIRECTLY ON THE FABRIC AT THE TOE OF THE REAR EXCAVATION SLOPE. A SLOT WILL NEED TO BE CUT IN THE FABRIC AT THE POINT WHERE THE SUBDRAIN EXITS THE FABRIC NEAR THE END OF THE ABUTMENT WING WALL.

POROUS BACKFILL IS THEN PLACED AND LEVELED, NO COMPACTION IS REQUIRED.

THE REMAINING WORK INVOLVES BACKFILLING WITH FLOODABLE BACKFILL, SURFACE FLOODING, AND VIBRATORY COMPACTION. THE FLOODABLE BACKFILL MATERIAL SHALL BE IN ACCORDANCE WITH THE STANDARD SPECIFICATIONS. THE FLOODABLE BACKFILL SHALL BE PLACED IN INDIVIDUAL LIFTS, SURFACE FLOODED, AND COMPACTED WITH VIBRATORY COMPACTION TO ENSURE FULL CONSOLIDATION. LIMIT THE LOOSE LIFTS TO NO MORE THAN 2 FEET OF THICKNESS.

START SURFACE FLOODING FOR EACH FLOODABLE BACKFILL LIFT AT THE HIGH POINT OF THE SUBDRAIN AND PROGRESS TO THE LOW POINT WHERE THE SUBDRAIN EXITS THE FABRIC. TO ENSURE UNIFORM SURFACE FLOODING, WATER RUNNING FULL IN A 2-INCH DIAMETER HOSE SHOULD BE SPRAYED IN SUCCESSIVE 6-FOOT TO 8-FOOT INCREMENTS FOR 5 MINUTES WITHIN EACH INCREMENT.

FLOODABLE BACKFILL LIFT PLACEMENT, FLOODING, AND COMPACTION SHALL PROGRESS UNTIL THE REQUIRED FULL THICKNESS OF THE ABUTMENT BACKFILL HAS BEEN COMPLETED.

WATER REQUIRED FOR FLOODING, SUBDRAINS, POROUS BACKFILL, FLOODABLE BACKFILL, AND GEOTEXTILE FABRIC FURNISHED AT THE BRIDGE ABUTMENTS WILL NOT BE MEASURED SEPARATELY FOR PAYMENT.

THE COST OF WATER REQUIRED FOR FLOODING, SUBDRAINS, POROUS BACKFILL, FLOODABLE BACKFILL, AND GEOTEXTILE FABRIC FURNISHED AT THE BRIDGE ABUTMENTS SHALL BE INCLUDED IN THE CONTRACT UNIT PRICE BID FOR STRUCTURAL CONCRETE.

NOTE:
SEE SUBDRAIN DETAILS SHEET FOR DETAILS NOT SHOWN ON THIS SHEET WHICH ARE PERTINENT TO THIS STRUCTURE.

NOTE:

SUBDRAIN SHALL SLOPE DOWNWARD 2% FROM ℄ APPROACH ROADWAY WHEN OUTLETTING BOTH SIDES OF THE ABUTMENT.

SUBDRAIN SHALL SLOPE DOWNWARD 2% FROM HIGH END WHEN OUTLETTING AT ONE END OF THE ABUTMENT.

THE GEOTEXTILE FABRIC SHALL BE IN ACCORDANCE WITH ARTICLE 4196.01, B, 6 OF THE STANDARD SPECIFICATIONS. IF THE ENGINEERING FABRIC IS LAPPED THE LAPS SHALL BE A MINIMUM OF ONE FOOT IN LENGTH, SHINGLE FASHION WITH UP SLOPE LAP PIECE ON TOP AND STAPLED FOR CONTINUITY.

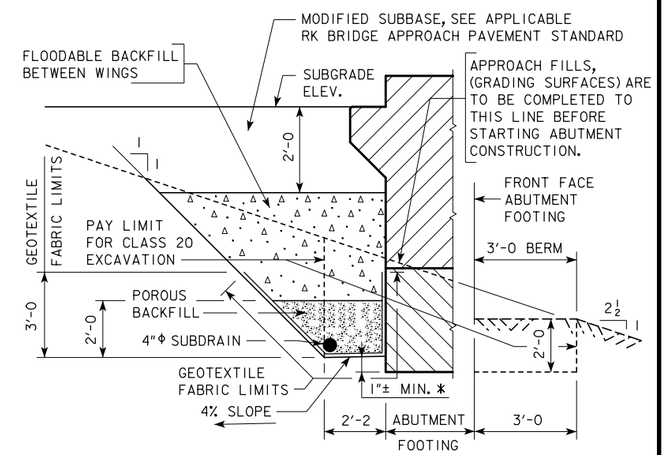

SECTION A-A

BACKFILL DETAILS

NOTE: GEOTEXTILE FABRIC WILL BE ATTACHED TO FACE OF ABUTMENT FOOTING AND WINGS.

* DIMENSION VARIES DUE TO 2% SUBDRAIN SLOPE.

LATEST REVISION DATE

APPROVED BY BRIDGE ENGINEER

IOWA DOT Highway Division

STANDARD DESIGN - 40' ROADWAY, 3 SPAN BRIDGES

ROLLED STEEL BEAM BRIDGES

OCTOBER, 2014

ABUTMENT BACKFILL DETAILS, 0° SKEW

RS40-173-14

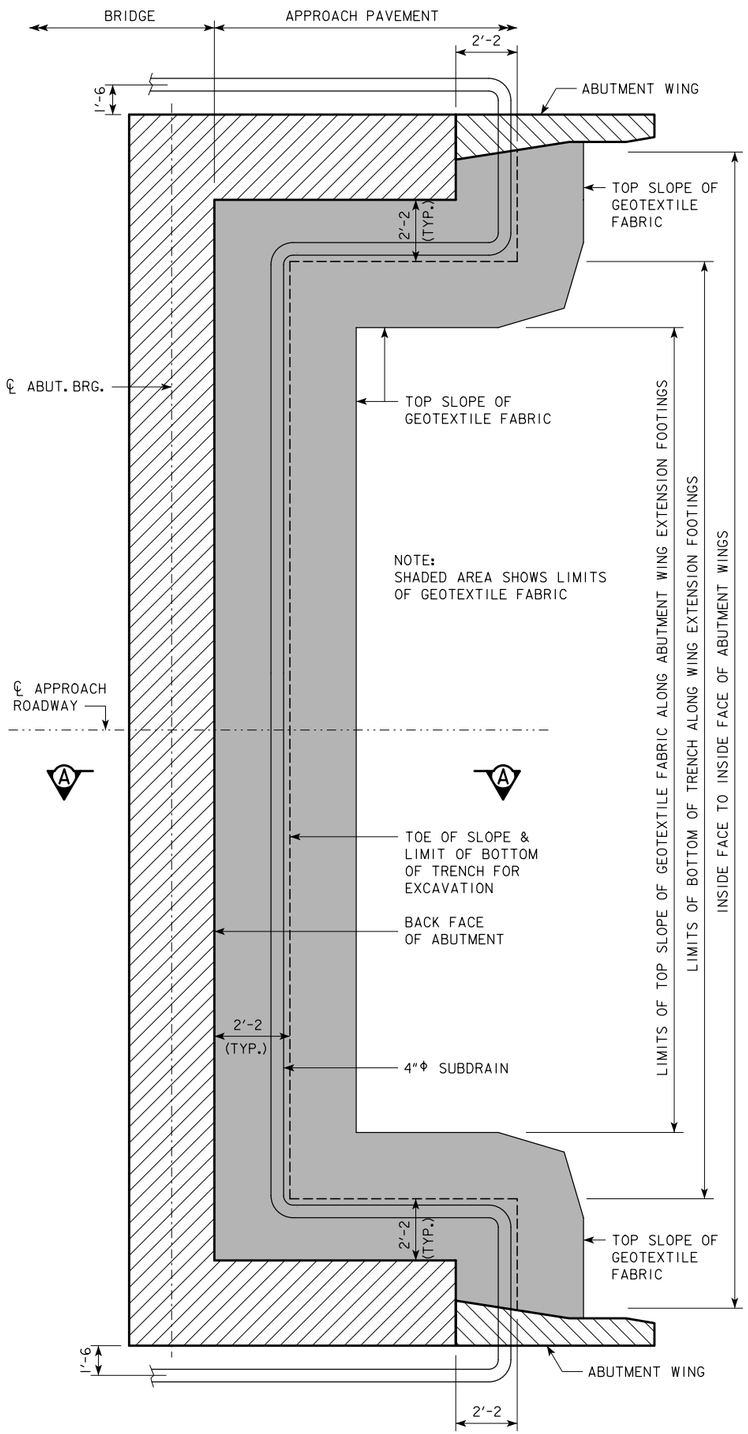

ABUTMENT PLAN WITH WING EXTENSIONS

NOTE: THESE DETAILS TO BE USED FOR 340'-0 BRIDGE LENGTH.

ABUTMENT BACKFILL PROCESS:

THE BASE OF THE EXCAVATION SUBGRADE BEHIND THE ABUTMENT IS TO BE GRADED WITH A 4% SLOPE AWAY FROM THE ABUTMENT FOOTING AND A 2% CROSS SLOPE IN THE DIRECTION OF THE SUBDRAIN OUTLET. THIS EXCAVATION SHAPING IS TO BE DONE PRIOR TO BEGINNING INSTALLATION OF THE GEOTEXTILE AND BACKFILL MATERIAL.

AFTER THE SUBGRADE HAS BEEN SHAPED, THE GEOTEXTILE FABRIC SHALL BE INSTALLED IN ACCORDANCE WITH THE DETAILS SHOWN. THE FABRIC IS INTENDED TO BE INSTALLED IN THE BASE OF THE EXCAVATION AND EXTENDED VERTICALLY UP THE ABUTMENT BACKWALL, ABUTMENT WING WALLS, AND EXCAVATION FACE TO A HEIGHT THAT WILL BE APPROXIMATELY 1 TO 2 FOOT HIGHER THAN THE HEIGHT OF THE POROUS BACKFILL PLACEMENT AS SHOWN IN THE "BACKFILL DETAILS" ON THIS SHEET. THE STRIPS OF THE FABRIC PLACED SHALL OVERLAP APPROXIMATELY 1 FOOT AND SHALL BE PINNED IN PLACE. THE FABRIC SHALL BE ATTACHED TO THE ABUTMENT BY USING LATH FOLDED IN THE FABRIC AND SECURED TO THE CONCRETE WITH SHALLOW CONCRETE NAILS. THE FABRIC PLACED AGAINST THE EXCAVATION FACE SHALL BE PINNED.

WHEN THE FABRIC IS IN PLACE, THE SUBDRAIN SHALL BE INSTALLED DIRECTLY ON THE FABRIC AT THE TOE OF THE REAR EXCAVATION SLOPE. A SLOT WILL NEED TO BE CUT IN THE FABRIC AT THE POINT WHERE THE SUBDRAIN EXITS THE FABRIC NEAR THE END OF THE ABUTMENT WING WALL.

POROUS BACKFILL IS THEN PLACED AND LEVELED, NO COMPACTION IS REQUIRED.

THE REMAINING WORK INVOLVES BACKFILLING WITH FLOODABLE BACKFILL, SURFACE FLOODING, AND VIBRATORY COMPACTION. THE FLOODABLE BACKFILL MATERIAL SHALL BE IN ACCORDANCE WITH THE STANDARD SPECIFICATIONS. THE FLOODABLE BACKFILL SHALL BE PLACED IN INDIVIDUAL LIFTS, SURFACE FLOODED, AND COMPACTED WITH VIBRATORY COMPACTION TO ENSURE FULL CONSOLIDATION. LIMIT THE LOOSE LIFTS TO NO MORE THAN 2 FEET OF THICKNESS.

START SURFACE FLOODING FOR EACH FLOODABLE BACKFILL LIFT AT THE HIGH POINT OF THE SUBDRAIN AND PROGRESS TO THE LOW POINT WHERE THE SUBDRAIN EXITS THE FABRIC. TO ENSURE UNIFORM SURFACE FLOODING, WATER RUNNING FULL IN A 2-INCH DIAMETER HOSE SHOULD BE SPRAYED IN SUCCESSIVE 6-FOOT TO 8-FOOT INCREMENTS FOR 5 MINUTES WITHIN EACH INCREMENT.

FLOODABLE BACKFILL LIFT PLACEMENT, FLOODING, AND COMPACTION SHALL PROGRESS UNTIL THE REQUIRED FULL THICKNESS OF THE ABUTMENT BACKFILL HAS BEEN COMPLETED.

WATER REQUIRED FOR FLOODING, SUBDRAINS, POROUS BACKFILL, FLOODABLE BACKFILL, AND GEOTEXTILE FABRIC FURNISHED AT THE BRIDGE ABUTMENTS WILL NOT BE MEASURED SEPARATELY FOR PAYMENT.

THE COST OF WATER REQUIRED FOR FLOODING, SUBDRAINS, POROUS BACKFILL, FLOODABLE BACKFILL, AND GEOTEXTILE FABRIC FURNISHED AT THE BRIDGE ABUTMENTS SHALL BE INCLUDED IN THE CONTRACT UNIT PRICE BID FOR STRUCTURAL CONCRETE.

NOTE:
SEE SUBDRAIN DETAILS SHEET FOR DETAILS NOT SHOWN ON THIS SHEET WHICH ARE PERTINENT TO THIS STRUCTURE.

NOTE:

SUBDRAIN SHALL SLOPE DOWNWARD 2% FROM ℄ APPROACH ROADWAY WHEN OUTLETTING BOTH SIDES OF THE ABUTMENT.

SUBDRAIN SHALL SLOPE DOWNWARD 2% FROM HIGH END WHEN OUTLETTING AT ONE END OF THE ABUTMENT.

THE GEOTEXTILE FABRIC SHALL BE IN ACCORDANCE WITH ARTICLE 4196.01, B, 6 OF THE STANDARD SPECIFICATIONS. IF THE ENGINEERING FABRIC IS LAPPED THE LAPS SHALL BE A MINIMUM OF ONE FOOT IN LENGTH, SHINGLE FASHION WITH UP SLOPE LAP PIECE ON TOP AND STAPLED FOR CONTINUITY.

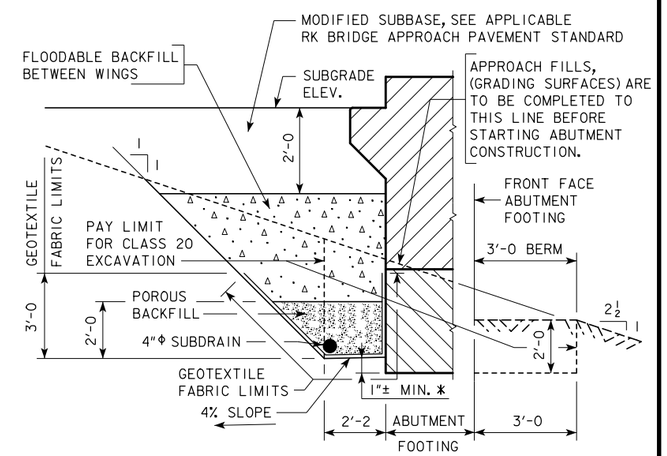

SECTION A-A

BACKFILL DETAILS

NOTE: GEOTEXTILE FABRIC WILL BE ATTACHED TO FACE OF ABUTMENT FOOTING AND WINGS.

* DIMENSION VARIES DUE TO 2% SUBDRAIN SLOPE.

LATEST REVISION DATE

APPROVED BY BRIDGE ENGINEER

IOWA DOT Highway Division

STANDARD DESIGN - 40' ROADWAY, 3 SPAN BRIDGES

ROLLED STEEL BEAM BRIDGES

OCTOBER, 2014

ABUTMENT BACKFILL DETAILS, 0° SKEW

RS40-174-14

"W" DIMENSION	
SKEW	DIMENSION
10°	2'-2 3/8
20°	2'-3 11/16
30°	2'-6
45°	3'-0 3/4

NOTE: THESE DETAILS TO BE USED FOR 160'-0 TO 320'-0 BRIDGE LENGTHS.

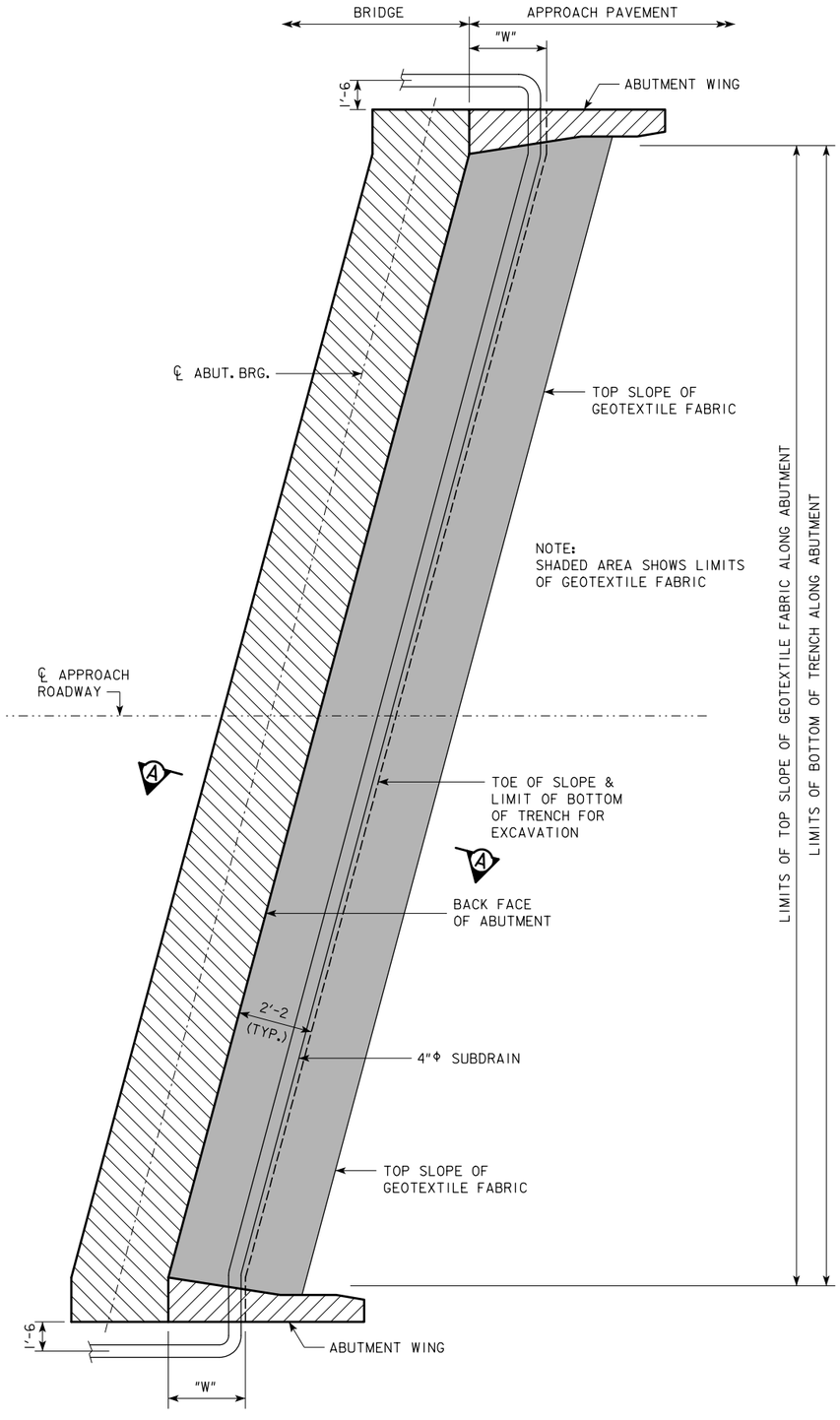

ABUTMENT PLAN WITHOUT WING EXTENSIONS

ABUTMENT BACKFILL PROCESS:

THE BASE OF THE EXCAVATION SUBGRADE BEHIND THE ABUTMENT IS TO BE GRADED WITH A 4% SLOPE AWAY FROM THE ABUTMENT FOOTING AND A 2% CROSS SLOPE IN THE DIRECTION OF THE SUBDRAIN OUTLET. THIS EXCAVATION SHAPING IS TO BE DONE PRIOR TO BEGINNING INSTALLATION OF THE GEOTEXTILE AND BACKFILL MATERIAL.

AFTER THE SUBGRADE HAS BEEN SHAPED, THE GEOTEXTILE FABRIC SHALL BE INSTALLED IN ACCORDANCE WITH THE DETAILS SHOWN. THE FABRIC IS INTENDED TO BE INSTALLED IN THE BASE OF THE EXCAVATION AND EXTENDED VERTICALLY UP THE ABUTMENT BACKWALL, ABUTMENT WING WALLS, AND EXCAVATION FACE TO A HEIGHT THAT WILL BE APPROXIMATELY 1 TO 2 FOOT HIGHER THAN THE HEIGHT OF THE POROUS BACKFILL PLACEMENT AS SHOWN IN THE "BACKFILL DETAILS" ON THIS SHEET. THE STRIPS OF THE FABRIC PLACED SHALL OVERLAP APPROXIMATELY 1 FOOT AND SHALL BE PINNED IN PLACE. THE FABRIC SHALL BE ATTACHED TO THE ABUTMENT BY USING LATH FOLDED IN THE FABRIC AND SECURED TO THE CONCRETE WITH SHALLOW CONCRETE NAILS. THE FABRIC PLACED AGAINST THE EXCAVATION FACE SHALL BE PINNED.

WHEN THE FABRIC IS IN PLACE, THE SUBDRAIN SHALL BE INSTALLED DIRECTLY ON THE FABRIC AT THE TOE OF THE REAR EXCAVATION SLOPE. A SLOT WILL NEED TO BE CUT IN THE FABRIC AT THE POINT WHERE THE SUBDRAIN EXITS THE FABRIC NEAR THE END OF THE ABUTMENT WING WALL.

POROUS BACKFILL IS THEN PLACED AND LEVELED, NO COMPACTION IS REQUIRED.

THE REMAINING WORK INVOLVES BACKFILLING WITH FLOODABLE BACKFILL, SURFACE FLOODING, AND VIBRATORY COMPACTION. THE FLOODABLE BACKFILL MATERIAL SHALL BE IN ACCORDANCE WITH THE STANDARD SPECIFICATIONS. THE FLOODABLE BACKFILL SHALL BE PLACED IN INDIVIDUAL LIFTS, SURFACE FLOODED, AND COMPACTED WITH VIBRATORY COMPACTION TO ENSURE FULL CONSOLIDATION. LIMIT THE LOOSE LIFTS TO NO MORE THAN 2 FEET OF THICKNESS.

START SURFACE FLOODING FOR EACH FLOODABLE BACKFILL LIFT AT THE HIGH POINT OF THE SUBDRAIN AND PROGRESS TO THE LOW POINT WHERE THE SUBDRAIN EXITS THE FABRIC. TO ENSURE UNIFORM SURFACE FLOODING, WATER RUNNING FULL IN A 2-INCH DIAMETER HOSE SHOULD BE SPRAYED IN SUCCESSIVE 6-FOOT TO 8-FOOT INCREMENTS FOR 5 MINUTES WITHIN EACH INCREMENT.

FLOODABLE BACKFILL LIFT PLACEMENT, FLOODING, AND COMPACTION SHALL PROGRESS UNTIL THE REQUIRED FULL THICKNESS OF THE ABUTMENT BACKFILL HAS BEEN COMPLETED.

WATER REQUIRED FOR FLOODING, SUBDRAINS, POROUS BACKFILL, FLOODABLE BACKFILL, AND GEOTEXTILE FABRIC FURNISHED AT THE BRIDGE ABUTMENTS WILL NOT BE MEASURED SEPARATELY FOR PAYMENT.

THE COST OF WATER REQUIRED FOR FLOODING, SUBDRAINS, POROUS BACKFILL, FLOODABLE BACKFILL, AND GEOTEXTILE FABRIC FURNISHED AT THE BRIDGE ABUTMENTS SHALL BE INCLUDED IN THE CONTRACT UNIT PRICE BID FOR STRUCTURAL CONCRETE.

NOTE:
SEE SUBDRAIN DETAILS SHEET FOR DETAILS NOT SHOWN ON THIS SHEET WHICH ARE PERTINENT TO THIS STRUCTURE.

NOTE:

SUBDRAIN SHALL SLOPE DOWNWARD 2% FROM ℄ APPROACH ROADWAY WHEN OUTLETTING BOTH SIDES OF THE ABUTMENT.

SUBDRAIN SHALL SLOPE DOWNWARD 2% FROM HIGH END WHEN OUTLETTING AT ONE END OF THE ABUTMENT.

THE GEOTEXTILE FABRIC SHALL BE IN ACCORDANCE WITH ARTICLE 4196.01, B, 6 OF THE STANDARD SPECIFICATIONS. IF THE ENGINEERING FABRIC IS LAPPED THE LAPS SHALL BE A MINIMUM OF ONE FOOT IN LENGTH, SHINGLE FASHION WITH UP SLOPE LAP PIECE ON TOP AND STAPLED FOR CONTINUITY.

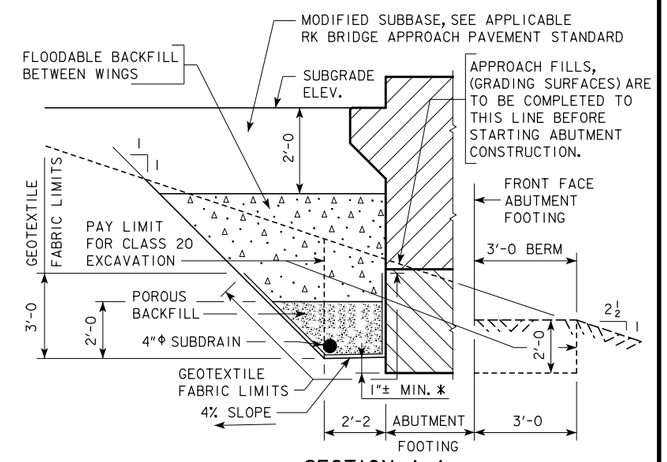

SECTION A-A

BACKFILL DETAILS

NOTE: GEOTEXTILE FABRIC WILL BE ATTACHED TO FACE OF ABUTMENT FOOTING AND WINGS.

* DIMENSION VARIES DUE TO 2% SUBDRAIN SLOPE.

LATEST REVISION DATE

APPROVED BY BRIDGE ENGINEER

IOWA DOT Highway Division

STANDARD DESIGN - 40' ROADWAY, 3 SPAN BRIDGES

ROLLED STEEL BEAM BRIDGES

OCTOBER, 2014

ABUTMENT BACKFILL DETAILS, SKEWED

RS40-175-14

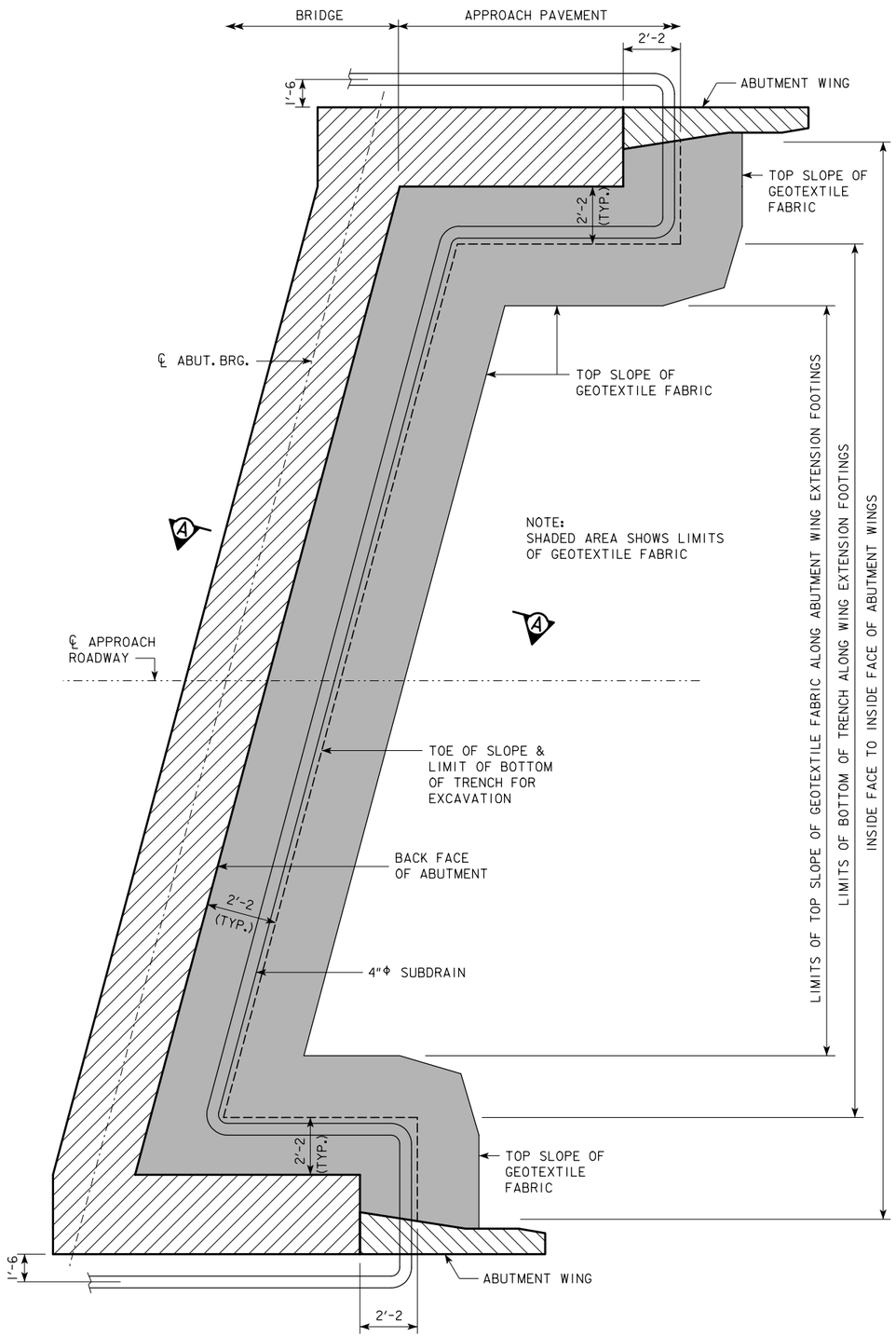

ABUTMENT PLAN WITH WING EXTENSIONS

NOTE: THESE DETAILS TO BE USED FOR 340'-0 BRIDGE LENGTH.

ABUTMENT BACKFILL PROCESS:

THE BASE OF THE EXCAVATION SUBGRADE BEHIND THE ABUTMENT IS TO BE GRADED WITH A 4% SLOPE AWAY FROM THE ABUTMENT FOOTING AND A 2% CROSS SLOPE IN THE DIRECTION OF THE SUBDRAIN OUTLET. THIS EXCAVATION SHAPING IS TO BE DONE PRIOR TO BEGINNING INSTALLATION OF THE GEOTEXTILE AND BACKFILL MATERIAL.

AFTER THE SUBGRADE HAS BEEN SHAPED, THE GEOTEXTILE FABRIC SHALL BE INSTALLED IN ACCORDANCE WITH THE DETAILS SHOWN. THE FABRIC IS INTENDED TO BE INSTALLED IN THE BASE OF THE EXCAVATION AND EXTENDED VERTICALLY UP THE ABUTMENT BACKWALL, ABUTMENT WING WALLS, AND EXCAVATION FACE TO A HEIGHT THAT WILL BE APPROXIMATELY 1 TO 2 FOOT HIGHER THAN THE HEIGHT OF THE POROUS BACKFILL PLACEMENT AS SHOWN IN THE "BACKFILL DETAILS" ON THIS SHEET. THE STRIPS OF THE FABRIC PLACED SHALL OVERLAP APPROXIMATELY 1 FOOT AND SHALL BE PINNED IN PLACE. THE FABRIC SHALL BE ATTACHED TO THE ABUTMENT BY USING LATH FOLDED IN THE FABRIC AND SECURED TO THE CONCRETE WITH SHALLOW CONCRETE NAILS. THE FABRIC PLACED AGAINST THE EXCAVATION FACE SHALL BE PINNED.

WHEN THE FABRIC IS IN PLACE, THE SUBDRAIN SHALL BE INSTALLED DIRECTLY ON THE FABRIC AT THE TOE OF THE REAR EXCAVATION SLOPE. A SLOT WILL NEED TO BE CUT IN THE FABRIC AT THE POINT WHERE THE SUBDRAIN EXITS THE FABRIC NEAR THE END OF THE ABUTMENT WING WALL.

POROUS BACKFILL IS THEN PLACED AND LEVELED, NO COMPACTION IS REQUIRED.

THE REMAINING WORK INVOLVES BACKFILLING WITH FLOODABLE BACKFILL, SURFACE FLOODING, AND VIBRATORY COMPACTION. THE FLOODABLE BACKFILL MATERIAL SHALL BE IN ACCORDANCE WITH THE STANDARD SPECIFICATIONS. THE FLOODABLE BACKFILL SHALL BE PLACED IN INDIVIDUAL LIFTS, SURFACE FLOODED, AND COMPACTED WITH VIBRATORY COMPACTION TO ENSURE FULL CONSOLIDATION. LIMIT THE LOOSE LIFTS TO NO MORE THAN 2 FEET OF THICKNESS.

START SURFACE FLOODING FOR EACH FLOODABLE BACKFILL LIFT AT THE HIGH POINT OF THE SUBDRAIN AND PROGRESS TO THE LOW POINT WHERE THE SUBDRAIN EXITS THE FABRIC. TO ENSURE UNIFORM SURFACE FLOODING, WATER RUNNING FULL IN A 2-INCH DIAMETER HOSE SHOULD BE SPRAYED IN SUCCESSIVE 6-FOOT TO 8-FOOT INCREMENTS FOR 5 MINUTES WITHIN EACH INCREMENT.

FLOODABLE BACKFILL LIFT PLACEMENT, FLOODING, AND COMPACTION SHALL PROGRESS UNTIL THE REQUIRED FULL THICKNESS OF THE ABUTMENT BACKFILL HAS BEEN COMPLETED.

WATER REQUIRED FOR FLOODING, SUBDRAINS, POROUS BACKFILL, FLOODABLE BACKFILL, AND GEOTEXTILE FABRIC FURNISHED AT THE BRIDGE ABUTMENTS WILL NOT BE MEASURED SEPARATELY FOR PAYMENT.

THE COST OF WATER REQUIRED FOR FLOODING, SUBDRAINS, POROUS BACKFILL, FLOODABLE BACKFILL, AND GEOTEXTILE FABRIC FURNISHED AT THE BRIDGE ABUTMENTS SHALL BE INCLUDED IN THE CONTRACT UNIT PRICE BID FOR STRUCTURAL CONCRETE.

NOTE:
SEE SUBDRAIN DETAILS SHEET FOR DETAILS NOT SHOWN ON THIS SHEET WHICH ARE PERTINENT TO THIS STRUCTURE.

NOTE:

SUBDRAIN SHALL SLOPE DOWNWARD 2% FROM ℄ APPROACH ROADWAY WHEN OUTLETTING BOTH SIDES OF THE ABUTMENT.

SUBDRAIN SHALL SLOPE DOWNWARD 2% FROM HIGH END WHEN OUTLETTING AT ONE END OF THE ABUTMENT.

THE GEOTEXTILE FABRIC SHALL BE IN ACCORDANCE WITH ARTICLE 4196.01, B, 6 OF THE STANDARD SPECIFICATIONS. IF THE ENGINEERING FABRIC IS LAPPED THE LAPS SHALL BE A MINIMUM OF ONE FOOT IN LENGTH, SHINGLE FASHION WITH UP SLOPE LAP PIECE ON TOP AND STAPLED FOR CONTINUITY.

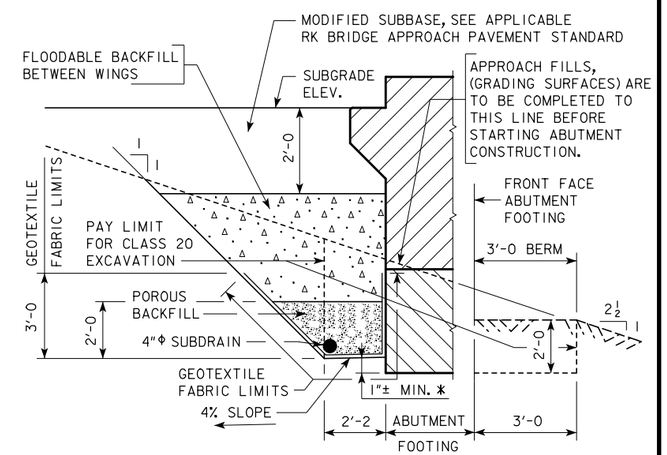

SECTION A-A

BACKFILL DETAILS

NOTE: GEOTEXTILE FABRIC WILL BE ATTACHED TO FACE OF ABUTMENT FOOTING AND WINGS.

* DIMENSION VARIES DUE TO 2% SUBDRAIN SLOPE.

LATEST REVISION DATE

APPROVED BY BRIDGE ENGINEER

IOWA DOT Highway Division

STANDARD DESIGN - 40' ROADWAY, 3 SPAN BRIDGES

ROLLED STEEL BEAM BRIDGES

OCTOBER, 2014

ABUTMENT BACKFILL DETAILS, SKEWED

RS40-176-14