Iowa Department of Transportation
Highway Division

H24SI–05 PRETENSIONED PRESTRESSED CONCRETE BEAM BRIDGE STANDARDS

INDEX FOR H24SI-05 STANDARDS:

H24SI-01-05	INDEX, GENERAL NOTES & GENERAL INFORMATION
H24SI-02-05	SUPERSTRUCTURE DETAILS
H24SI-03-05	ABUTMENT DETAILS-0° SKEW A & B BEAMS
H24SI-04-05	ABUTMENT DETAILS-0° SKEW C & D BEAMS
H24SI-05-05	LONGITUDINAL SECTION 0° SKEW A & B BEAMS
H24SI-06-05	LONGITUDINAL SECTION 0° SKEW C & D BEAMS
H24SI-07-05	SUPERSTRUCTURE 0° SKEW
H24SI-08-05	DECK AND ABUTMENT REINFORCEMENT 0° SKEW
H24SI-09-05	ABUTMENT DETAILS-15° SKEW A & B BEAMS
H24SI-10-05	ABUTMENT DETAILS-15° SKEW C & D BEAMS
H24SI-11-05	LONGITUDINAL SECTION 15° SKEW A & B BEAMS
H24SI-12-05	LONGITUDINAL SECTION 15° SKEW C & D BEAMS
H24SI-13-05	SUPERSTRUCTURE 15° SKEW
H24SI-14-05	DECK AND ABUTMENT REINFORCEMENT 15° SKEW
H24SI-15-05	ABUTMENT DETAILS-30° SKEW A & B BEAMS
H24SI-16-05	ABUTMENT DETAILS-30° SKEW C & D BEAMS
H24SI-17-05	LONGITUDINAL SECTION 30° SKEW A & B BEAMS
H24SI-18-05	LONGITUDINAL SECTION 30° SKEW C & D BEAMS
H24SI-19-05	SUPERSTRUCTURE 30° SKEW
H24SI-20-05	DECK AND ABUTMENT REINFORCEMENT 30° SKEW
H24SI-21-05	LXA BEAM DETAILS
H24SI-22-05	LXA46-LXA55 BEAM DETAILS
H24SI-23-05	LXB BEAM DETAILS
H24SI-24-05	LXB67 BEAM DETAILS
H24SI-25-05	LXC BEAM DETAILS
H24SI-26-05	LXC80 BEAM DETAILS
H24SI-27-05	LXD BEAM DEATILS
H24SI-28-05	LXD90 & LXD100 BEAM DETAILS
H24SI-29-05	LXD110 BEAM DETAILS
H24SI-30-05	INTERMEDIATE STEEL DIAPHRAGMS
H24SI-31-05	BARRIER RAIL DETAILS SHEET 1 OF 3
H24SI-32-05	BARRIER RAIL DETAILS SHEET 2 OF 3
H24SI-33-05	BARRIER RAIL DETAILS SHEET 3 OF 3
H24SI-34-05	OPEN RAIL DETAILS SHEET 1 OF 2
H24SI-35-05	OPEN RAIL DETAILS SHEET 2 OF 2

EXAMPLES OF BRIDGE SEAT AND STEP CALCULATIONS:

THE DESIGNER SHALL SHOW ON THE PLANS THE 4 ELEVATIONS AND THE 3 STEP DIMENSIONS REQUIRED FOR THE ABUTMENT BRIDGE SEATS.

THE BOXED IN DETAILS IN THE FOLLOWING EXAMPLES SHOW HOW THE INFORMATION SHOULD BE INDICATED ON THE PLANS.

EXAMPLE NO. 1

A STRAIGHT GRADE OF -3.25% WITH THE P.I. STATION OF 103+75.00 AND ELEVATION OF 653.29. THE BRIDGE LENGTH IS 80'-0 ℄ TO ℄ OF ABUTMENT BEARINGS WITH 30° SKEW RIGHT AHEAD.

STATIONS

℄ BRIDGE STA.	=	105+85.00	
℄ ½ OF SPAN LENGTH	±	40.00	
℄ ABUT. BRGS.	=	106+25.00	105+45.00

ELEVATIONS ALONG PROFILE GRADE LINE (P.G.L. ELEV.)

℄ ABUT. BRG. = 653.29-[(105+45.00)-(103+75.00)](0.0325) = 647.77
℄ ABUT. BRG. = 653.29-[(106+25.00)-(103+75.00)](0.0325) = 645.17

ELEVATIONS TOP OF SLAB FACING ALONG THE STATIONING

(BEAM SPACING)(TAN. SK. Δ)(GRADE) = (3.5)TAN 30°(0.0325) = 0.07'
(BEAM SPACING)(TAN. SK. Δ)(GRADE) = (7.0)TAN 30°(0.0325) = 0.13'

ABUTMENT NO. 1

BEAMS	EXTERIOR	INTERIOR	INTERIOR	EXTERIOR
PGL ELEV.	647.77	647.77	647.77	647.77
SK. ΔCORRECT	+ 0.20	+ 0.07	- 0.07	- 0.20
SLAB CROWN	- 0.13	- 0.03	- 0.03	- 0.13
TOP SLAB ELEV.	647.84	647.81	647.67	647.44
-"U" (4'-9⅛)	- 4.76	- 4.76	- 4.76	- 4.76
BR. SEAT ELEV.	643.08	643.05	642.91	642.68

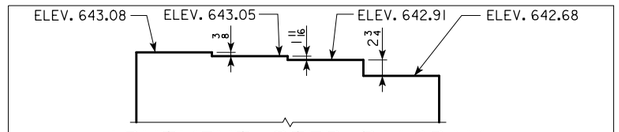

ABUTMENT STEP DIAGRAM
LOOKING UP STATIONING

EXAMPLE NO. 2

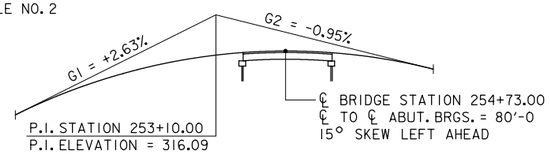

FROM SHEET H24SI-02-05 { LENGTH OF VERTICAL CURVE = (20000)(0.0358) = 716 FEET
M.O. = (0.0358)(716)(⅛) = 3.204 FEET

STATIONS

℄ BRIDGE STA.	=	254+73.00		P.I. STA.	253+10.00
℄ ½ OF SPAN LENGTH	±	40.00		±(½)(LENGTH V.C.)	3+58.00
℄ ABUT. BRGS.	=	255+13.00	254+33.00	P.C. STA.	249+52.00
				P.T. STA.	256+68.00

ELEVATIONS TOP OF SLAB FACING ALONG THE STATIONING

(BEAM SPACING)(TAN. SK. Δ) = (3.5)TAN 15° = 0.94'
(BEAM SPACING)(TAN. SK. Δ) = (7.0)TAN 15° = 1.88'

ABUTMENT NO. 1

BEAMS	EXTERIOR	INTERIOR	INTERIOR	EXTERIOR
STATION	254+35.81	254+33.94	254+32.06	254+30.19
PGL ELEV.	313.55	313.54	313.54	313.53
SLAB CROWN	- 0.13	- 0.03	-0.03	- 0.13
TOP SLAB ELEV.	313.42	313.51	313.51	313.40
-"U" (4'-8 11/16)	- 4.72	- 4.72	- 4.72	- 4.72
BR. SEAT ELEV.	308.70	308.79	308.79	308.68

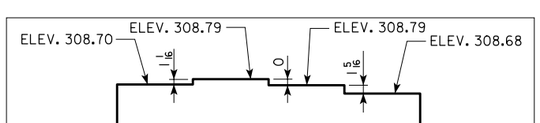

ABUTMENT STEP DIAGRAM
LOOKING UP STATIONING

GENERAL CONSIDERATIONS:

THE H24SI-05 BRIDGE STANDARDS, IF PROPERLY USED, PROVIDE THE STRUCTURAL PLANS NECESSARY TO CONSTRUCT SINGLE SPAN 24' ROADWAY PRETENSIONED PRESTRESSED CONCRETE BEAM BRIDGES WITH LENGTHS OF 46'-8, 55'-0, 67'-6, 80'-0 90'-0, 100'-0 AND 110'-0.

THESE BRIDGES MAY BE BUILT ON A 0°, 15° OR 30° SKEW. THESE PLANS SHOW THE BRIDGES SKEWED IN ONE DIRECTION, BUT ALL DIMENSIONS AND DETAILS WOULD BE THE SAME FOR THE OPPOSITE SKEW.

FOR CLARITY, MOST SECTIONS SHOWN ON THE FOLLOWING SHEETS ARE DRAWN WITH BARRIER RAIL ONLY. THESE SECTIONS WILL BE IDENTICAL FOR OPEN RAIL DESIGN WITH ANY MODIFICATIONS SHOWN ON SHEET H24SI-34-05 AND H24SI-35-05.

NOTE THAT WHEN APPROACH PAVEMENT IS TO BE PLACED, THE TEMPORARY PAVING BLOCKS SHALL BE REMOVED AND A PROPER JOINT FOR EXPANSION SHALL BE PROVIDED BETWEEN THE BRIDGE AND THE APPROACH PAVING.

THE ABUTMENTS FOR THESE STANDARDS HAVE BEEN DESIGNED FOR FRICTION OR POINT BEARING PILES. IT IS NECESSARY THAT THE LENGTH OF THE ABUTMENT PILES BE DESIGNATED ON THE FRONT SHEET OF THE PLANS.

THESE STANDARDS GIVE MOST OF THE INFORMATION NECESSARY TO BUILD THESE BRIDGES ON EITHER A CREST VERTICAL CURVE OR A STRAIGHT GRADE. BECAUSE OF THE INFINITE NUMBER OF GRADE POSSIBILITIES IT WILL BE NECESSARY TO SHOW ON THE PLANS THE ABUTMENT STEP DIMENSIONS. TO HELP IN OBTAINING THIS STEP INFORMATION SEE "EXAMPLES OF BRIDGE SEAT AND STEP CALCULATIONS" ON THIS SHEET.

PROVIDE TOP OF SLAB ELEVATIONS AND WING ELEVATIONS A, B AND C AS NOTED ON THE STANDARD SHEETS (LONGITUDINAL SECTION).

DESIGN STRESSES:

DESIGN STRESSES FOR THE FOLLOWING MATERIALS ARE IN ACCORDANCE WITH AASHTO STANDARD SPECIFICATIONS FOR HIGHWAY BRIDGES, SERIES OF 2002.

REINFORCING STEEL IN ACCORDANCE WITH SECTION 8, GRADE 60.

CONCRETE IN ACCORDANCE WITH SECTION 8, f'c = 3500 PSI.

FOR 24' STANDARD PRESTRESSED CONCRETE BEAMS, SEE SHEET H24SI-21-05, H24SI-23-05, H24SI-25-05, H24SI-27-05.

SPECIFICATIONS:

DESIGN: AASHTO, SERIES OF 2002.

CONSTRUCTION: IOWA DEPARTMENT OF TRANSPORTATION SPECIFICATIONS FOR HIGHWAY AND BRIDGE CONSTRUCTION, SERIES 2001, PLUS APPLICABLE GENERAL SUPPLEMENTAL SPECIFICATIONS, DEVELOPMENTAL SPECIFICATIONS, SUPPLEMENTAL SPECIFICATIONS AND SPECIAL PROVISIONS SHALL APPLY TO CONSTRUCTION WORK ON THIS PROJECT.

LATEST REVISION DATE :

APPROVED BY

STANDARD DESIGN - 24' ROADWAY, SINGLE SPAN BRIDGE

PRETENSIONED PRESTRESSED CONCRETE BEAM BRIDGES

JANUARY, 2005 HS20-44 LOADING

IOWA DEPARTMENT OF TRANSPORTATION - HIGHWAY DIVISION

INDEX, GENERAL NOTES & GENERAL INFORMATION

H24SI-01-05

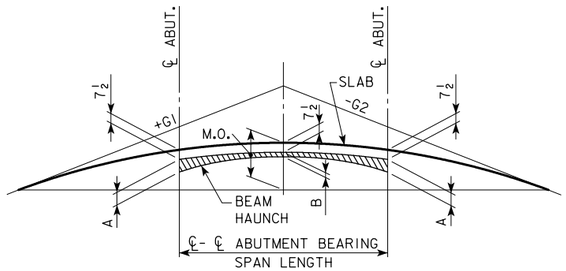

THICKNESS \ SPAN	46'-8	55'-0	67'-6	80'-0	90'-0	100'-0	110'-0
A	$1\frac{3}{16}$	$1\frac{3}{16}$	$1\frac{3}{16}$	$1\frac{3}{16}$	$\frac{13}{16}$	$1\frac{3}{8}$	$1\frac{5}{16}$
B	$\frac{1}{2}$	$\frac{1}{2}$	$\frac{1}{2}$	$\frac{1}{2}$	$\frac{1}{2}$	$\frac{1}{2}$	$\frac{1}{2}$

LENGTH OF VERTICAL CURVE REQUIRED = (20,000)(G1-G2)

M.O. = $\frac{(G1-G2)(\text{LENGTH OF V.C.})}{8}$

(G1-G2) IS THE ALGEBRAIC DIFFERENCE OF THE APPROACH GRADES EXPRESSED IN DECIMAL FORM. G1 NEED NOT HAVE THE SAME VALUE AS G2. MAXIMUM VALUE OF G1 OR G2 IS 5%. LENGTH OF CURVE AND M.O. ARE IN FEET.

SLAB AND HAUNCH THICKNESS AT BEAMS FOR VERTICAL CURVE

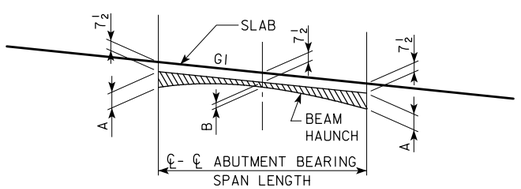

THICKNESS \ SPAN	46'-8	55'-0	67'-6	80'-0	90'-0	100'-0	110'-0
A	$1\frac{3}{8}$	$1\frac{3}{8}$	$1\frac{9}{16}$	$1\frac{5}{8}$	$1\frac{3}{8}$	$2\frac{1}{8}$	$2\frac{3}{16}$
B	$\frac{1}{2}$	$\frac{1}{2}$	$\frac{1}{2}$	$\frac{1}{2}$	$\frac{1}{2}$	$\frac{1}{2}$	$\frac{1}{2}$

G1 MAY HAVE A + OR - SIGN. THE MINIMUM NUMERICAL VALUE OF THE GRADE IS 0.3% AND THE MAXIMUM VALUE IS 8%.

SLAB AND HAUNCH THICKNESS AT BEAMS FOR STRAIGHT GRADE

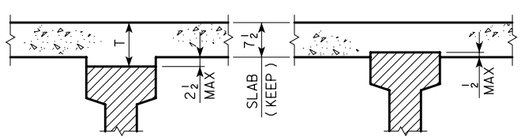

SLAB THICKNESS DETAIL

NOTE:
THE SLAB THICKNESS T AT THE BEAMS, ($7\frac{1}{2}$" SLAB PLUS HAUNCH), IS BASED ON THE ANTICIPATED BEAM CAMBER REMAINING AFTER PLACING THE SLAB, BUT IS NOT GUARANTEED FOR CONSTRUCTION. IF BEAM IS UNDER CAMBERED INCREASE THE HAUNCH THICKNESS OVER THE BEAM AT THE MIDPOINT OF THE SPANS (POINT B). IF THE BEAM IS OVER CAMBERED DECREASE THE HAUNCH THICKNESS OVER THE BEAM AT THE MIDPOINT OF THE SPANS (POINT B) TO A MAXIMUM OF $\frac{1}{2}$" EMBEDMENT IN THE SLAB. IF MORE THAN $\frac{1}{2}$" EMBEDMENT IS REQUIRED OR IF THE HAUNCH EXCEEDS $2\frac{1}{2}$", THE GRADE LINE IS TO BE REVISED.

LENGTH OF S3 x 7.5

(ABUTMENT BEAM SEAT)

BEAM BOTTOM FLANGE WIDTH	LENGTH OF S3 x 7.5
1'-5	$1'-3\frac{1}{2}$
1'-8	$1'-6\frac{1}{2}$
1'-10	$1'-8\frac{1}{2}$

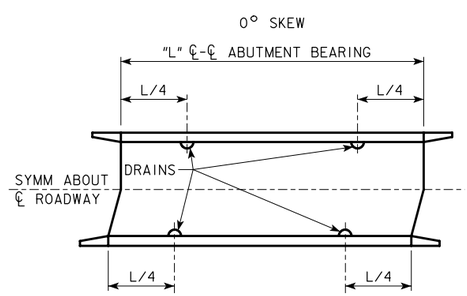

15° AND 30° SKEW

SITUATION SKETCH

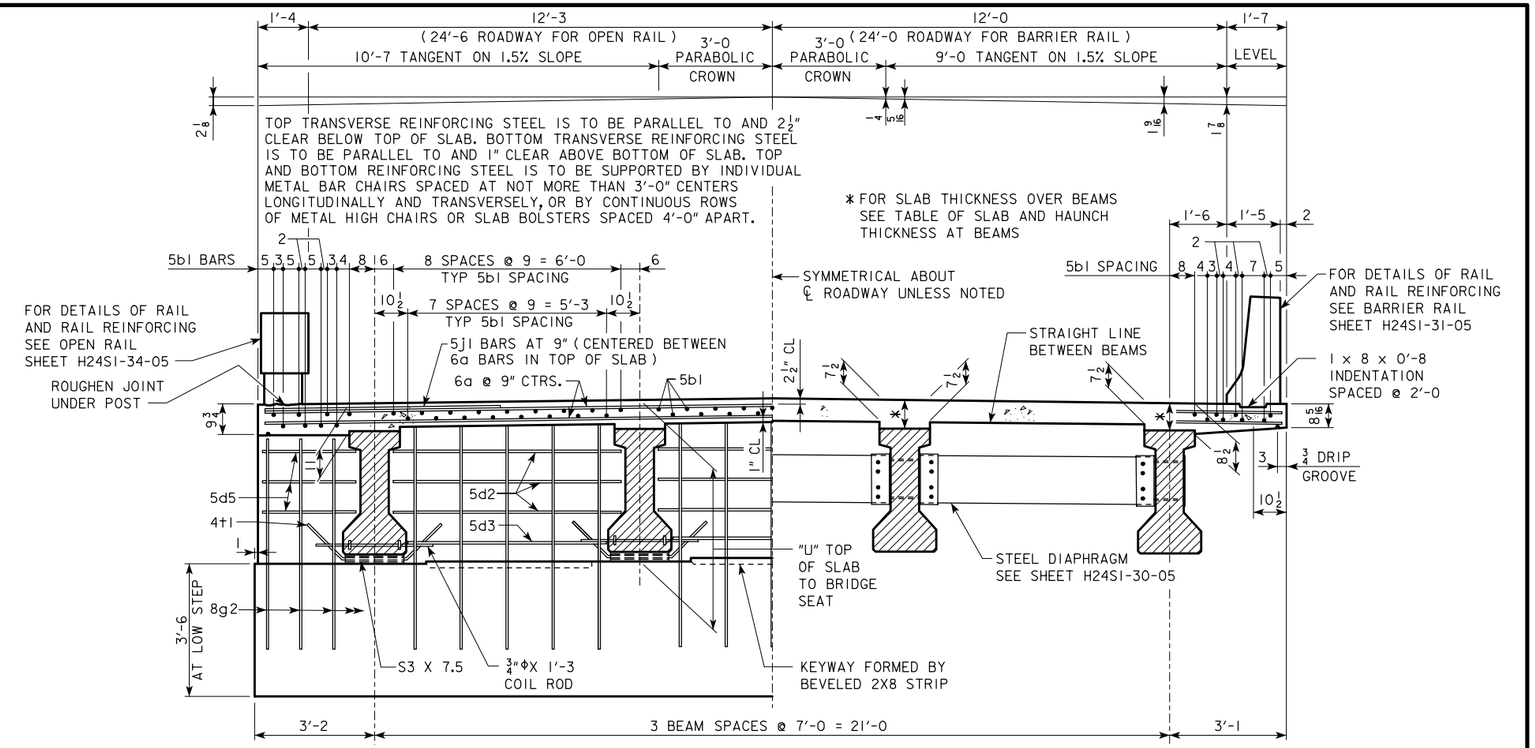

HALF SECTION NEAR ABUTMENT

SLAB CROSS SECTION AREA
FOR OPEN RAIL= 18.59 SQ. FT.

HALF SECTION NEAR MID SPAN

SLAB CROSS SECTION AREA
FOR BARRIER RAIL= 17.74 SQ. FT.

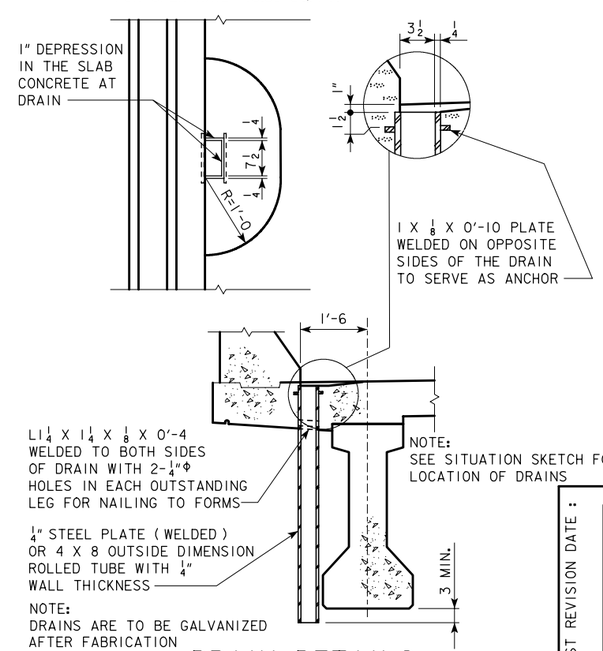

DRAIN DETAILS

(USE FOR BARRIER RAIL ONLY, NOT REQUIRED FOR OPEN RAIL)

GENERAL NOTES:

THESE BRIDGES ARE DESIGNED FOR HS20-44 LOADING PLUS 20 LBS. PER SQ. FT. OF ROADWAY FOR FUTURE WEARING SURFACE.

SLAB THICKNESS INCLUDES $\frac{1}{2}$" INTEGRAL WEARING SURFACE.

CLEAR DISTANCE FROM FACE OF CONCRETE TO NEAR REINFORCING BAR SHALL BE 2" UNLESS OTHERWISE NOTED OR SHOWN. ALL REINFORCING BARS ARE TO BE SECURELY WIRED IN PLACE AND ADEQUATELY SUPPORTED ON BAR CHAIRS BEFORE CONCRETE IS PLACED.

ALL PRESTRESSED BEAMS ARE TO BE SET VERTICAL.

FORMS FOR THE SLAB AND RAILS ARE TO BE SUPPORTED BY THE PRESTRESSED BEAMS.

COST OF DRAINS IS TO BE INCLUDED IN PRICE BID FOR STRUCTURAL STEEL.

THE ABUTMENT DIAPHRAGM CONCRETE IS TO BE PLACED MONOLITHIC WITH THE FLOOR SLAB.

ALL REINFORCING STEEL IS TO BE GRADE 60.

COST OF BEARING MATERIAL IS TO BE INCLUDED IN THE PRICE BID FOR PRETENSIONED, PRESTRESSED CONCRETE BEAM.

LATEST REVISION DATE :

APPROVED BY

STANDARD DESIGN - 24' ROADWAY, SINGLE SPAN BRIDGE

PRETENSIONED PRESTRESSED CONCRETE BEAM BRIDGES

JANUARY, 2005 HS20-44 LOADING

IOWA DEPARTMENT OF TRANSPORTATION - HIGHWAY DIVISION

SUPERSTRUCTURE DETAILS | H24S1-02-05

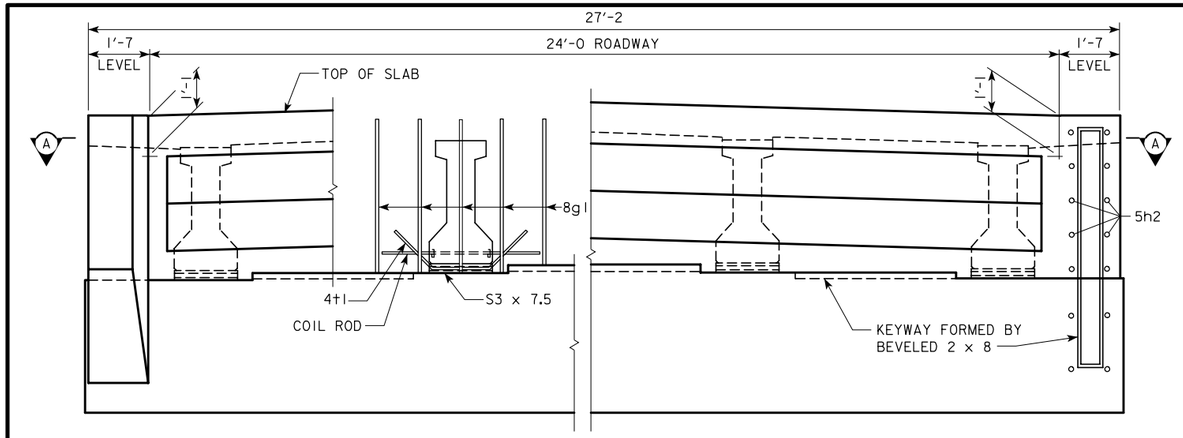

PART REAR ELEVATION AT ABUTMENT

NOTE: BARRIER RAIL NOT SHOWN.
(SHOWN FOR SOLID BARRIER RAIL)

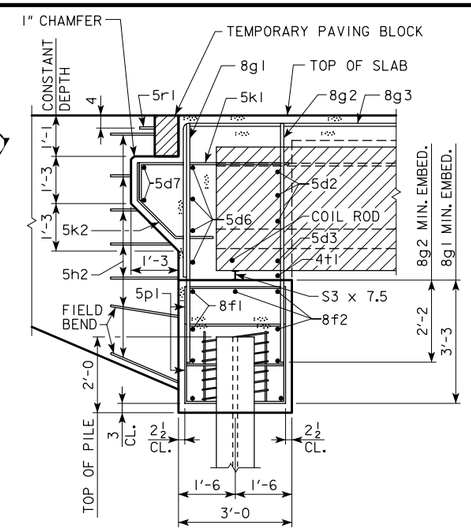

PART SECTION B-B

NOTE:
THE SPIRAL AT THE TOP OF EACH PILE TO BE 7 TURNS OF No. 2 BAR, 21" DIAMETER, 3" PITCH WITH 2 - $L\frac{7}{8} \times \frac{7}{8} \times \frac{1}{8}$ SPACERS PUNCHED TO HOLD SPIRAL.

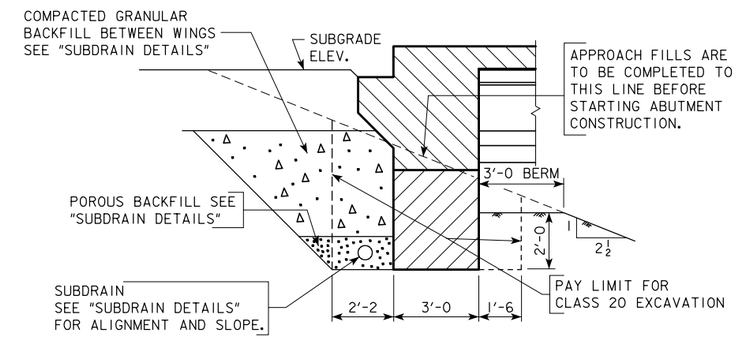

ABUTMENT EXCAVATION DETAILS

ABUTMENT NOTES:

MINIMUM CLEAR DISTANCE FROM FACE OF CONCRETE TO NEAR REINFORCING BAR IS TO BE 2" UNLESS OTHERWISE NOTED OR SHOWN.

ABUTMENT PILE SPACING

DIMENSION OR NO.	℄ TO ℄ ABUTMENT BEARING		
	46'-8	55'-0	67'-6
"A" PILE SPACES	4	5	6
"B" (FT. - IN.)	6'-0	4'-9	4'-0
"C" (FT. - IN.)	1'-8	1'-9½	1'-8
"D" EQUAL SPACES	4	3	2
NO. OF PILES PER ABUT.	5	6	7
DESIGN PILE LOAD (TONS)	36	33	33

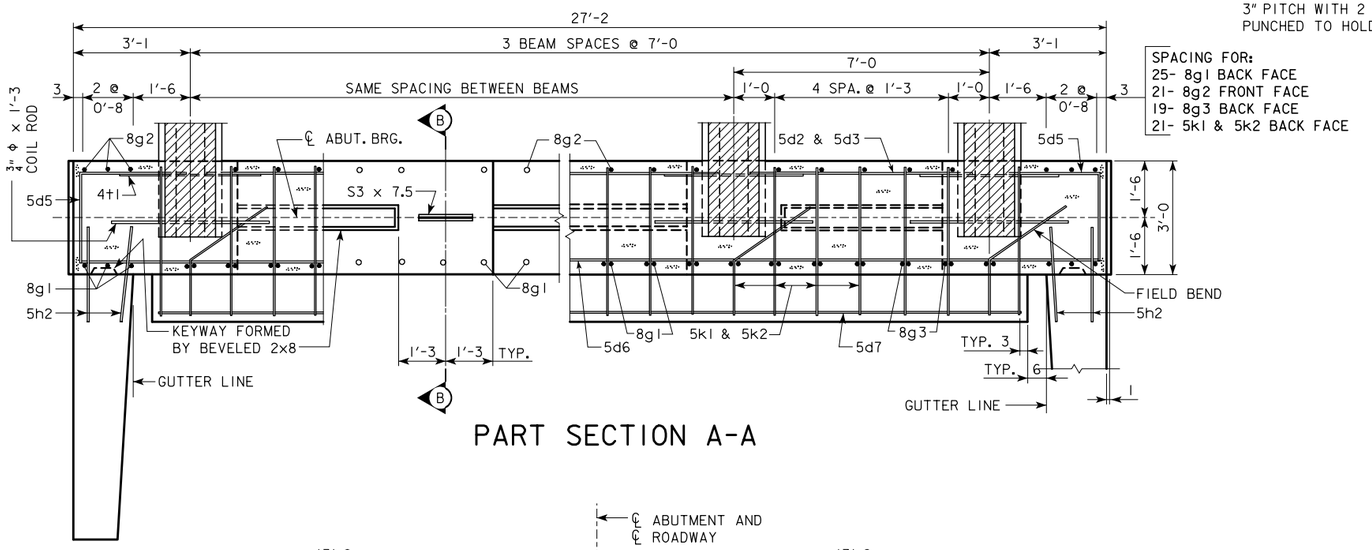

PART SECTION A-A

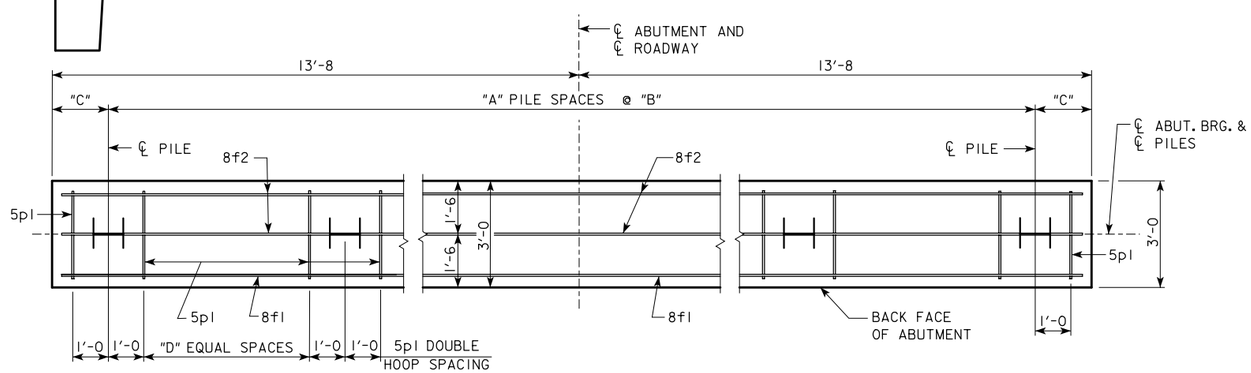

ABUTMENT PILE PLAN

LATEST REVISION DATE :

APPROVED BY

STANDARD DESIGN - 24' ROADWAY, SINGLE SPAN BRIDGE

PRETENSIONED PRESTRESSED CONCRETE BEAM BRIDGES

JANUARY, 2005 HS20-44 LOADING

IOWA DEPARTMENT OF TRANSPORTATION - HIGHWAY DIVISION

ABUTMENT DETAILS

0° SKEW A & B BEAMS

H24SI-03-05

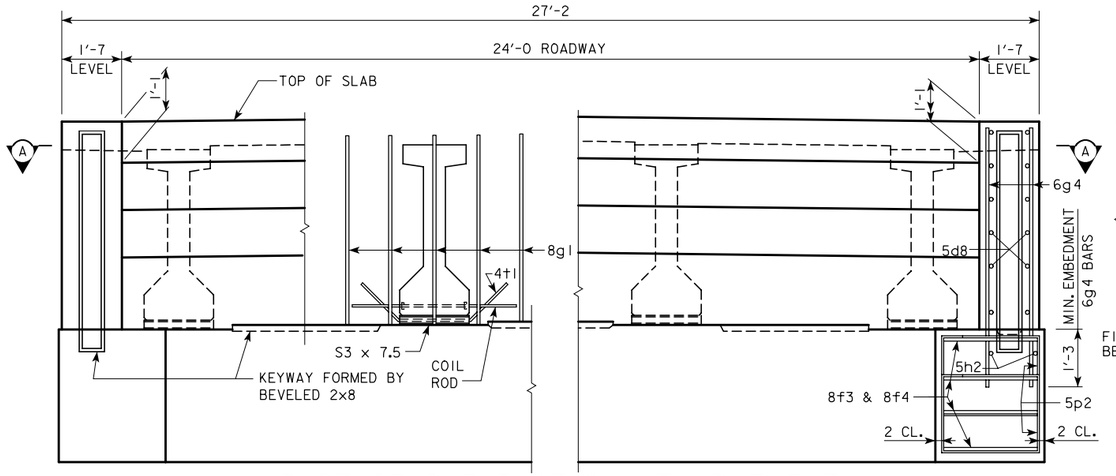

PART REAR ELEVATION AT ABUTMENT

NOTE: BARRIER RAIL AND WINGS NOT SHOWN.
(SHOWN FOR SOLID BARRIER RAIL)

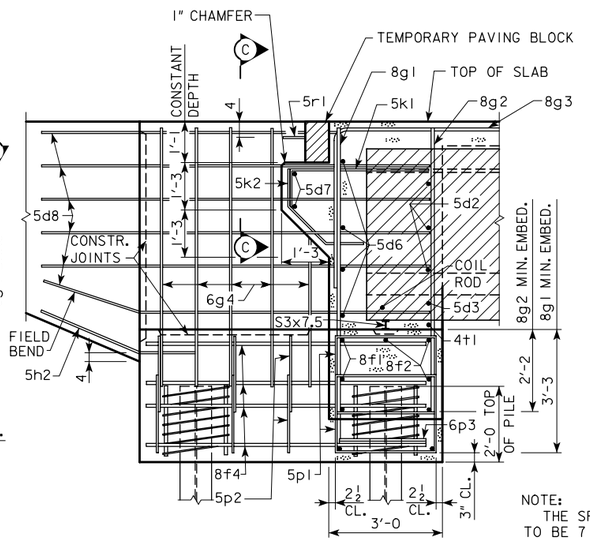

PART SECTION B - B

NOTE:
THE SPIRAL AT THE TOP OF EACH PILE TO BE 7 TURNS OF No. 2 BAR, 21" DIAMETER, 3" PITCH WITH 2 - L $\frac{7}{8} \times \frac{7}{8} \times \frac{1}{8}$ SPACERS PUNCHED TO HOLD SPIRAL.

ABUTMENT PILE SPACING

DIMENSION OR NO.	℄ TO ℄ ABUTMENT BEARING			
	80'-0	90'-0	100'-0	110'-0
"A" PILE SPACES	6	7	7	8
"B" (FT. - IN.)	4'-0	3'-5	3'-5	3'-0
"C" (FT - IN.)	1'-8	1'-8½	1'-8½	1'-8
"D" EQUAL SPACES	2	2	2	1
NO. OF PILES PER ABUT.	9	10	10	11
DESIGN PILE LOAD (TONS)	35	35	37	35

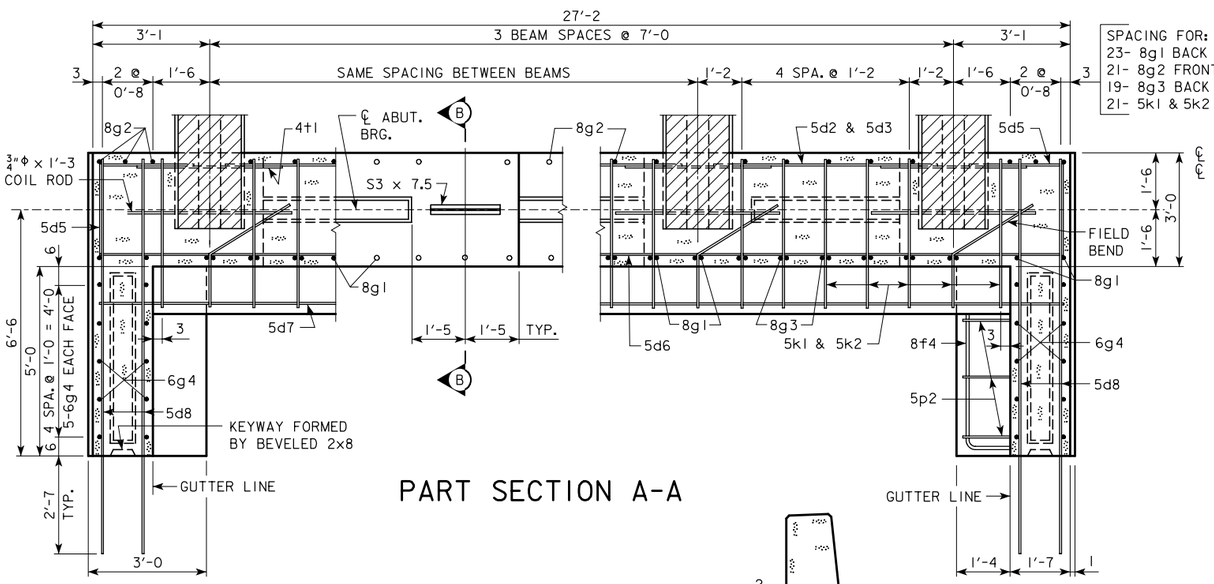

SPACING FOR:
23- 8g1 BACK FACE
21- 8g2 FRONT FACE
19- 8g3 BACK FACE
21- 5k1 & 5k2 BACK FACE

PART SECTION A-A

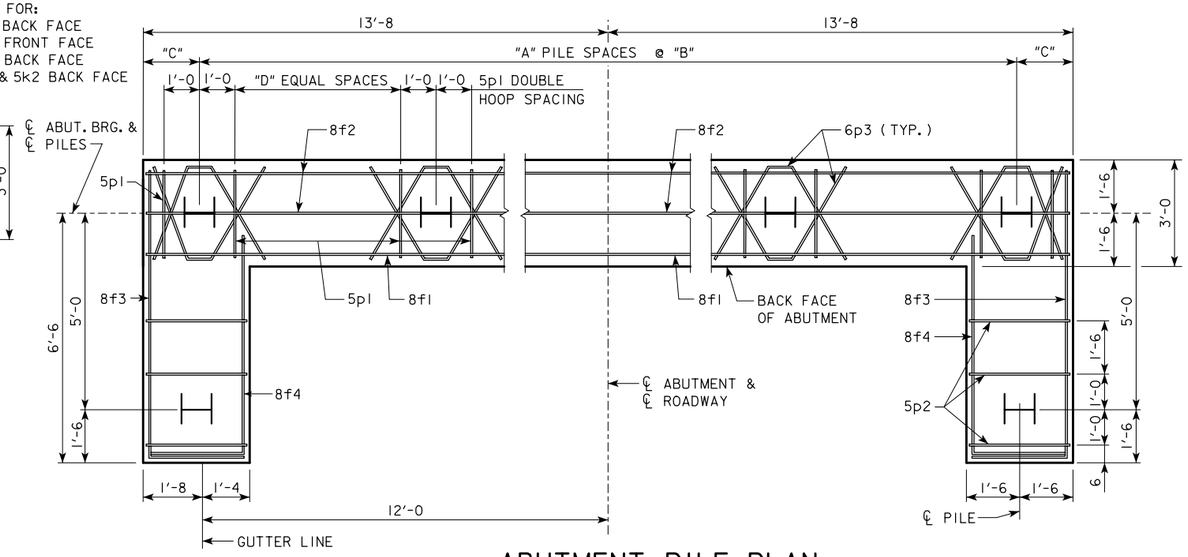

ABUTMENT PILE PLAN

ABUTMENT NOTES:

MINIMUM CLEAR DISTANCE FROM FACE OF CONCRETE TO NEAR REINFORCING BAR IS TO BE 2" UNLESS OTHERWISE NOTED OR SHOWN.

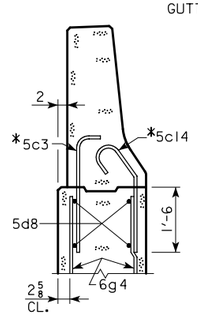

PART SECTION C-C

* NOTE: SEE BARRIER RAIL SHEET FOR DETAILS. REINFORCING BARS 5c3 AND 5c14 ARE INCLUDED IN SUPERSTRUCTURE QUANTITIES.

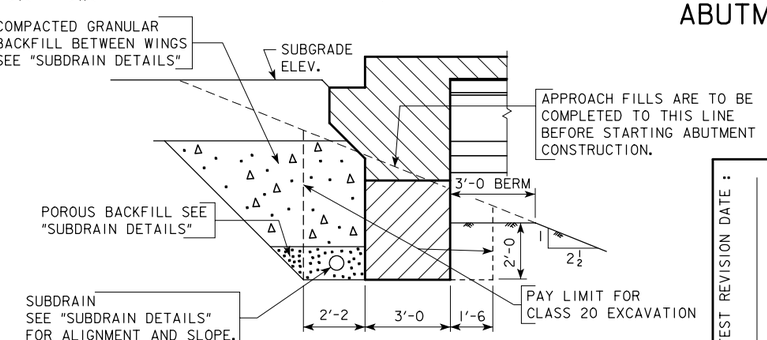

ABUTMENT EXCAVATION DETAILS

LATEST REVISION DATE :

APPROVED BY

STANDARD DESIGN - 24' ROADWAY, SINGLE SPAN BRIDGE

PRETENSIONED PRESTRESSED CONCRETE BEAM BRIDGES

JANUARY, 2005 HS20-44 LOADING

IOWA DEPARTMENT OF TRANSPORTATION - HIGHWAY DIVISION

ABUTMENT DETAILS

0° SKEW C & D BEAMS

H24SI-04-05

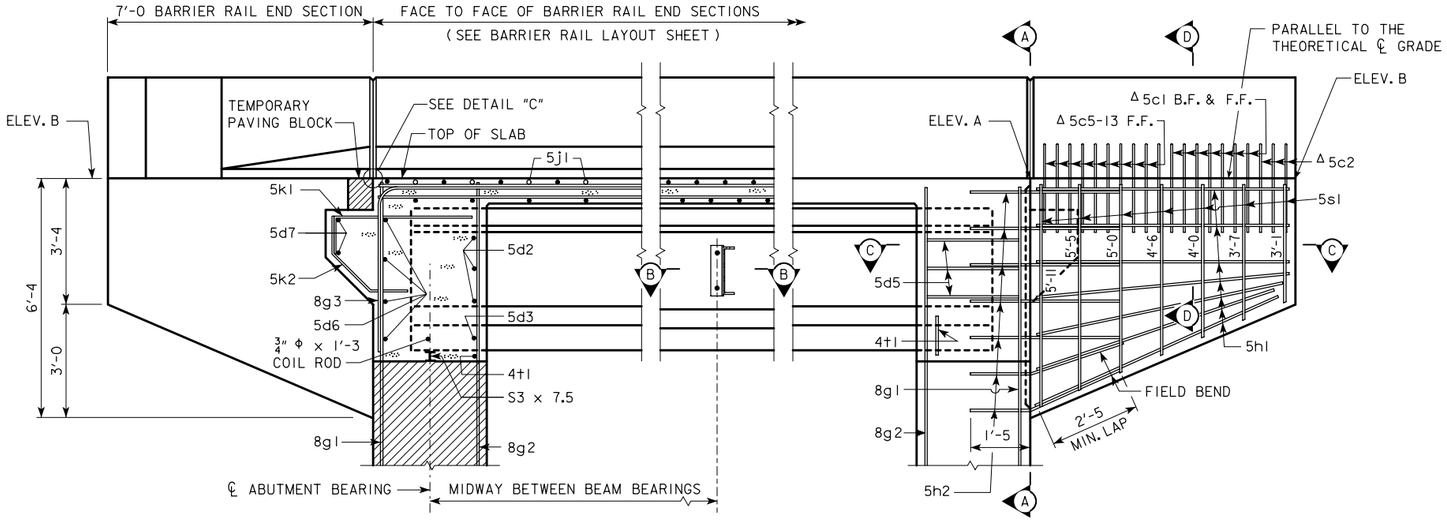

PART LONGITUDINAL SECTION NEAR GUTTER

(FOR DETAILS OF INTERMEDIATE DIAPHRAGM SEE SHEET H24SI-30-05)

PART END VIEW AT ABUTMENT

NOTE: PROVIDE ELEVATIONS A AND B IN THE BRIDGE PLAN SHEETS.

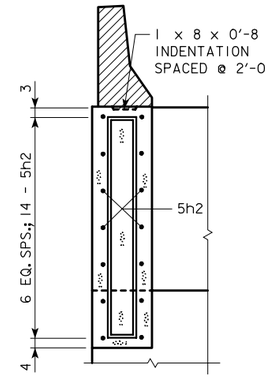

SECTION A-A

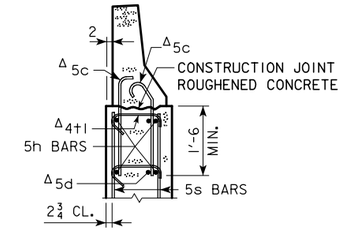

SECTION D-D

Δ NOTE:
SEE END SECTION DETAILS IN THESE PLANS FOR DETAILS OF BARRIER RAIL END SECTION AND SPACING FOR 5c BARRIER RAIL BARS. REINFORCING BARS "5c", "5d" AND "4t1" ARE INCLUDED IN THE SUPERSTRUCTURE QUANTITIES.

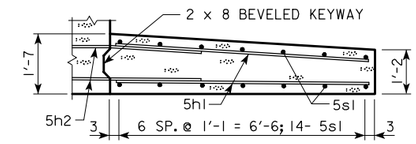

PART SECTION C-C

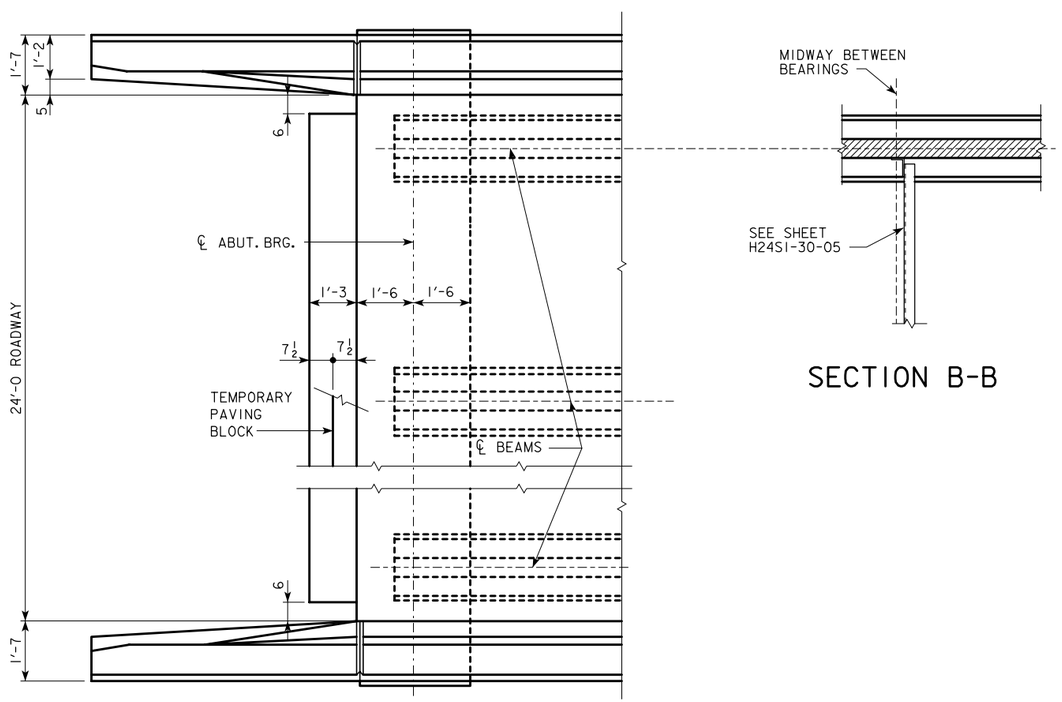

PART PLAN

SECTION B-B

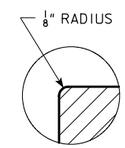

DETAIL "C"

(TEMPORARY PAVING BLOCK NOT SHOWN)

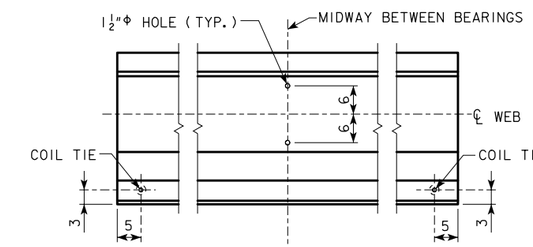

LOCATION OF BEAM COIL TIES AND STEEL DIAPHRAGM BOLT HOLES

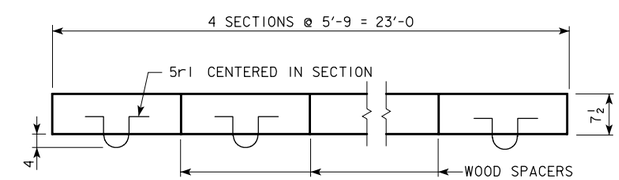

PLAN OF TEMPORARY PAVING BLOCK

NOTE: LINE PAVING NOTCH WITH TARPAPER BEFORE PLACING THE TEMPORARY PAVING BLOCK.

LATEST REVISION DATE :

APPROVED BY

STANDARD DESIGN - 24' ROADWAY, SINGLE SPAN BRIDGE

PRETENSIONED PRESTRESSED CONCRETE BEAM BRIDGES

JANUARY, 2005 HS20-44 LOADING

IOWA DEPARTMENT OF TRANSPORTATION - HIGHWAY DIVISION

LONGITUDINAL SECTION
0° SKEW A & B BEAMS

H24SI-05-05

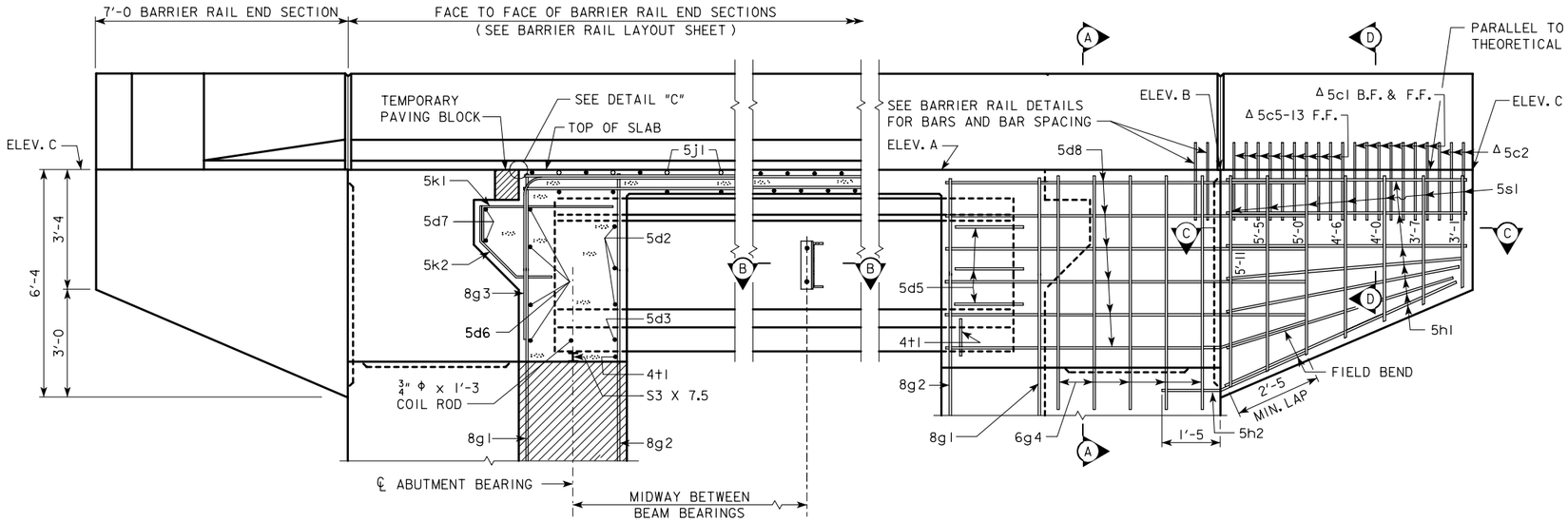

PART LONGITUDINAL SECTION NEAR GUTTER

(FOR DETAILS OF INTERMEDIATE DIAPHRAGM SEE SHEET H24S1-30-05)

PART END VIEW AT ABUTMENT

NOTE: PROVIDE ELEVATIONS A, B, AND C IN THE BRIDGE PLAN SHEETS.

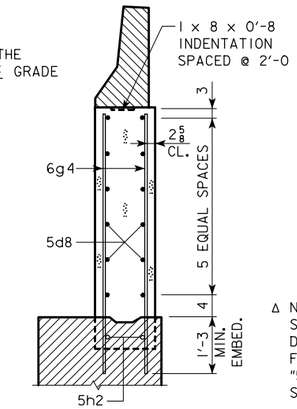

SECTION A-A

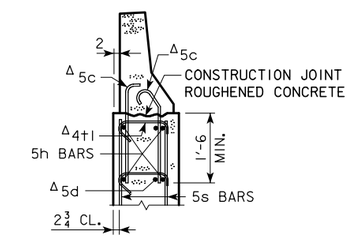

SECTION D-D

Δ NOTE:
SEE END SECTION DETAILS IN THESE PLANS FOR DETAILS OF BARRIER RAIL END SECTION AND SPACING FOR 5c BARRIER RAIL BARS. REINFORCING BARS "5c", "5d" AND "4t1" ARE INCLUDED IN THE SUPERSTRUCTURE QUANTITIES.

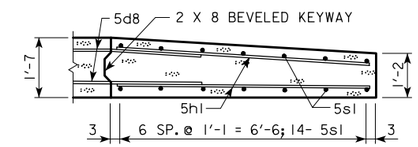

PART SECTION C-C

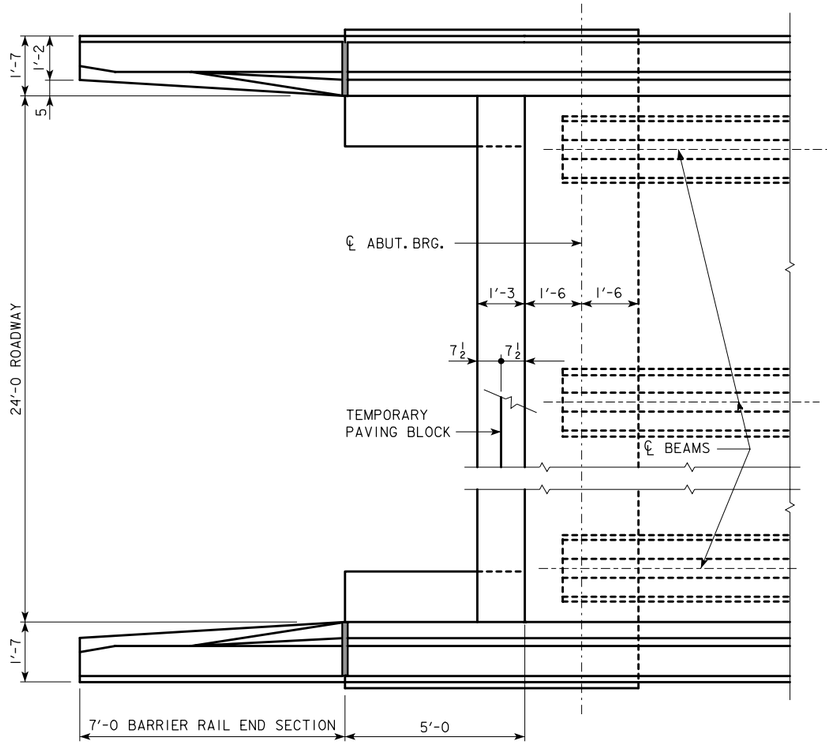

PART PLAN

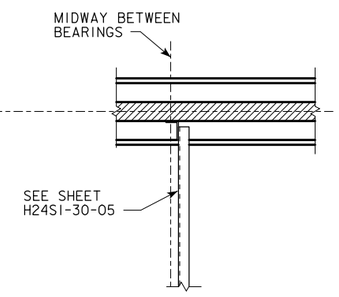

SECTION B-B

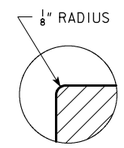

DETAIL "C"

(TEMPORARY PAVING BLOCK NOT SHOWN)

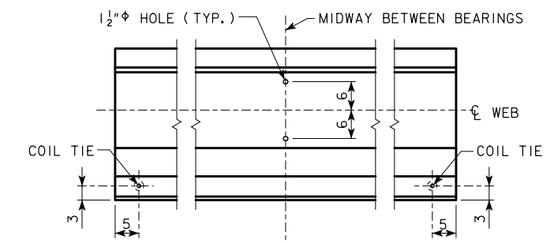

LOCATION OF BEAM COIL TIES AND STEEL DIAPHRAGM BOLT HOLES

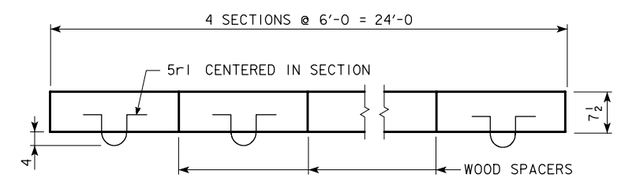

PLAN OF TEMPORARY PAVING BLOCK

NOTE: LINE PAVING NOTCH WITH TARPAPER BEFORE PLACING THE TEMPORARY PAVING BLOCK.

LATEST REVISION DATE :

APPROVED BY

STANDARD DESIGN - 24' ROADWAY, SINGLE SPAN BRIDGE

PRETENSIONED PRESTRESSED CONCRETE BEAM BRIDGES

JANUARY, 2005 HS20-44 LOADING

IOWA DEPARTMENT OF TRANSPORTATION - HIGHWAY DIVISION

LONGITUDINAL SECTION

0° SKEW C & D BEAMS

H24S1-06-05

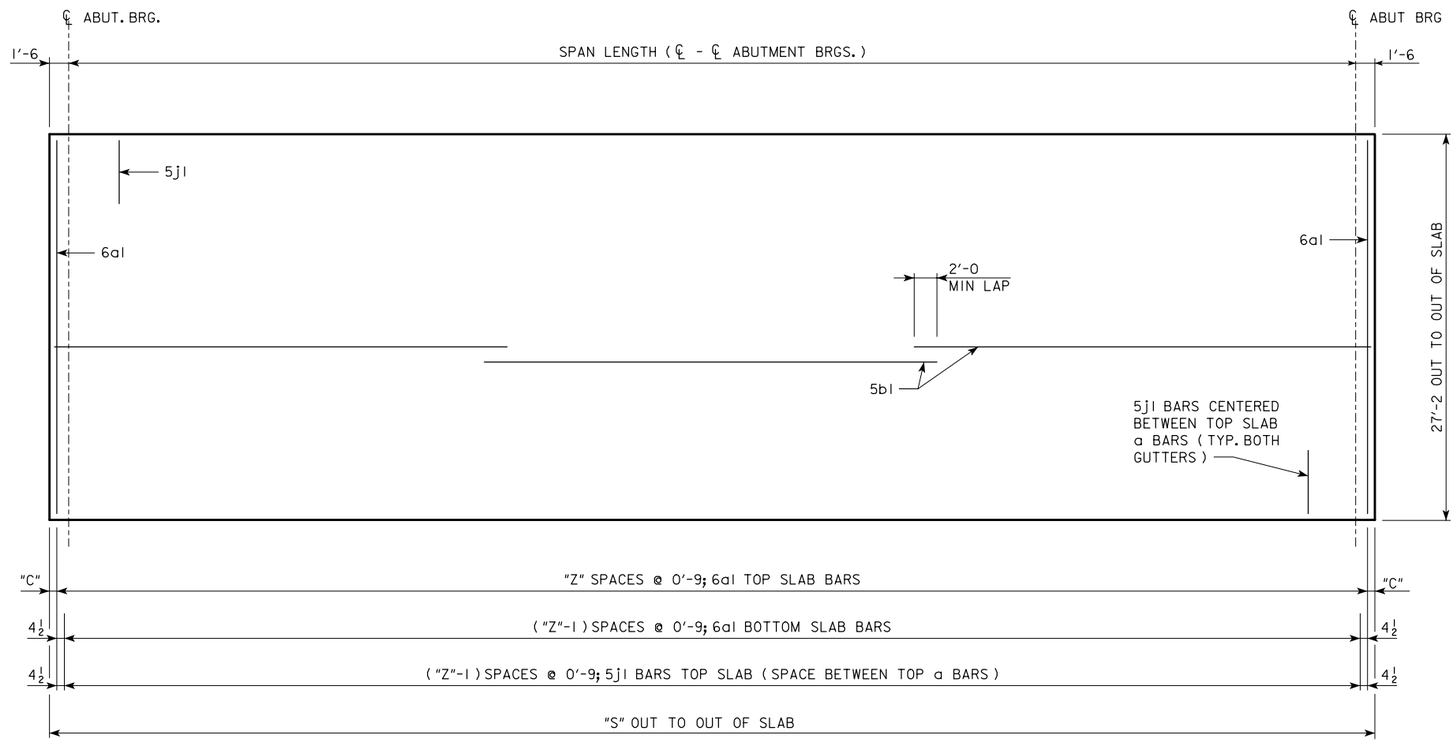

SLAB LAYOUT

SPAN LENGTH (℄ - ℄ ABUTMENT BRGS.)			46'-8	55'-0	67'-6	80'-0	90'-0	100'-0	110'-0
LOCATION OF EXTREME 6a1 TOP BAR FROM END OF SLAB		"C"	5½	6	4½	3	4½	6	3
NO. OF SPACES FOR 6a1 TOP BARS		"Z"	65	76	93	110	123	136	150
OUT TO OUT OF SLAB		"S"	49'-8	58'-0	70'-6	83'-0	93'-0	103'-0	113'-0
VERTICAL CURVE	TOP OF SLAB TO ABUTMENT TOP AT ℄ ABUTMENT BEARING	"U"	3'-7 11/16	3'-7 11/16	4'-2 11/16	4'-8 11/16	5'-5 5/16	5'-5 7/8	5'-5 13/16
STRAIGHT GRADE	TOP OF SLAB TO ABUTMENT TOP AT ℄ ABUTMENT BEARING	"U"	3'-7 7/8	3'-7 7/8	4'-3 1/16	4'-9 1/8	5'-5 7/8	5'-6 5/8	5'-6 11/16
D.L. ABUTMENT REACTION (D.L. + F.W.S.)		KIPS	236.1	269.2	324.3	359.1	415.1	449.1	483.1
L.L. ABUTMENT REACTION (HS20-44) NO IMPACT		KIPS	115.2	119.6	124.2	127.2	129.0	130.6	131.8

LATEST REVISION DATE :

APPROVED BY

STANDARD DESIGN - 24' ROADWAY, SINGLE SPAN BRIDGE

PRETENSIONED PRESTRESSED CONCRETE BEAM BRIDGES

JANUARY, 2005

HS20-44 LOADING

IOWA DEPARTMENT OF TRANSPORTATION - HIGHWAY DIVISION

SUPERSTRUCTURE

0° SKEW

H24S1-07-05

REINFORCING BAR LIST

ONE SUPERSTRUCTURE AND TWO ABUTMENTS

BRIDGE LENGTH

BAR	LOCATION	SHAPE	46'-8 LXA NO.	46'-8 LXA LENGTH	46'-8 LXA WEIGHT	55'-0 LXA NO.	55'-0 LXA LENGTH	55'-0 LXA WEIGHT	67'-6 LXB NO.	67'-6 LXB LENGTH	67'-6 LXB WEIGHT	80'-0 LXC NO.	80'-0 LXC LENGTH	80'-0 LXC WEIGHT	90'-0 LXD NO.	90'-0 LXD LENGTH	90'-0 LXD WEIGHT	100'-0 LXD NO.	100'-0 LXD LENGTH	100'-0 LXD WEIGHT	110'-0 LXD NO.	110'-0 LXD LENGTH	110'-0 LXD WEIGHT
6a1	SLAB TRANSVERSE, TOP & BOTTOM		131	26'-10	5280	153	26'-10	6167	187	26'-10	7537	221	26'-10	8908	247	26'-10	9956	273	26'-10	11,003	301	26'-10	12,132
5b1	SLAB LONGITUDINAL TOP & BOTTOM		134	25'-9	3599	134	29'-10	4170	134	36'-1	5044	201	28'-11	6063	201	32'-3	6761	201	35'-7	7460	201	38'-11	8159
5d2	ABUTMENT DIAPHRAM, LONGITUDINAL		18	6'-2	116	18	5'-11	112	18	5'-11	112	18	5'-11	112	18	6'-1	115	18	6'-1	115	18	6'-1	115
5d3	ABUTMENT DIAPHRAM, LONGITUDINAL		6	5'-3	33	6	5'-0	32	6	5'-0	32	6	5'-0	32	6	4'-10	31	6	4'-10	31	6	4'-10	31
5d5	ABUTMENT DIAPHRAGM, LONGITUDINAL - END		12	5'-0	63	12	5'-0	63	12	5'-0	63	12	5'-0	63	12	5'-0	63	12	5'-0	63	12	5'-0	63
5d6	ABUTMENT DIAPHRAGM LONGITUDINAL - B.F.		8	26'-9	224	8	26'-9	224	8	26'-9	224	8	26'-9	224	8	26'-9	224	8	26'-9	224	8	26'-9	224
5d7	PAVING NOTCH, LONGITUDINAL		4	22'-6	94	4	22'-6	94	4	22'-6	94	4	26'-8	112	4	26'-8	112	4	26'-8	112	4	26'-8	112
5d8	ABUTMENT DIAPH. WING EXT. LONGIT.		-	-	-	-	-	-	-	-	-	48	10'-6	526	48	10'-6	526	48	10'-6	526	48	10'-6	526
8f1	ABUTMENT FOOTING LONGITUDINAL - B.F.		8	26'-11	575	8	26'-11	575	8	26'-11	575	8	26'-11	575	8	26'-11	575	8	26'-11	575	8	26'-11	575
8f2	ABUTMENT FOOTING LONGITUDINAL - F.F.		10	26'-11	719	10	26'-11	719	10	26'-11	719	10	26'-11	719	10	26'-11	719	10	26'-11	719	10	26'-11	719
8f3	ABUTMENT EXTENSION LONGITUDINAL		-	-	-	-	-	-	-	-	-	16	10'-2	435	16	10'-2	435	16	10'-2	435	16	10'-2	435
8f4	ABUTMENT EXTENSION LONGITUDINAL		-	-	-	-	-	-	-	-	-	16	8'-8	371	16	8'-8	371	16	8'-8	371	16	8'-8	371
8g1	ABUTMENT VERTICAL - B.F.		50	6'-7	879	50	6'-7	879	50	7'-2	957	46	7'-8	942	46	8'-5	1034	46	8'-5	1034	46	8'-5	1034
8g2	ABUTMENT VERTICAL - F.F.		42	5'-6	617	42	5'-6	617	42	6'-1	683	42	6'-7	739	42	7'-4	823	42	7'-4	823	42	7'-4	823
8g3	ABUTMENT DIAPHRAGM VERTICAL - B.F.		38	15'-3	1548	38	15'-3	1548	38	15'-3	1548	38	15'-9	1598	38	15'-9	1598	38	15'-9	1598	38	15'-9	1598
6g4	ABUT. DIAPH. WING EXT. VERT.		-	-	-	-	-	-	-	-	-	40	5'-8	341	40	6'-5	386	40	6'-5	386	40	6'-5	386
5j1	SLAB TRANSV. TOP AT RAIL		130	6'-3	848	152	6'-3	991	186	6'-3	1213	220	6'-3	1435	246	6'-3	1604	272	6'-3	1774	300	6'-3	1956
5h1	ABUT. WING HORIZONTAL		56	6'-8	390	56	6'-8	390	56	6'-8	390	56	6'-8	390	56	6'-8	390	56	6'-8	390	56	6'-8	390
5h2	ABUTMENT TO WING ANCHOR		56	4'-0	234	56	4'-0	234	56	4'-0	234	8	4'-0	34	8	4'-0	34	8	4'-0	34	8	4'-0	34
5k1	PAVING NOTCH, TRANSVERSE		42	4'-11	216	42	4'-11	216	42	4'-11	216	42	4'-11	216	42	4'-11	216	42	4'-11	216	42	4'-11	216
5k2	PAVING NOTCH, TRANSVERSE		42	3'-5	150	42	3'-5	150	42	3'-5	150	42	3'-5	150	42	3'-5	150	42	3'-5	150	42	3'-5	150
5p1	ABUTMENT HOOPS		88	10'-6	964	88	10'-6	964	80	10'-6	877	80	10'-6	877	92	10'-6	1008	92	10'-6	1008	72	10'-6	789
5p2	ABUT. EXT. HOOPS		-	-	-	-	-	-	-	-	-	24	10'-8	268	24	10'-8	268	24	10'-8	268	24	10'-8	268
6p3	ABUT. BOTT. AT PILES		-	-	-	-	-	-	-	-	-	28	6'-8	281	32	6'-8	321	32	6'-8	321	36	6'-8	361
5r1	PAVING BLOCK LIFTING HOOPS		8	2'-10	24	8	2'-10	24	8	2'-10	24	8	2'-10	24	8	2'-10	24	8	2'-10	24	8	2'-10	24
5s1	WING, VERTICAL		56	VARIES	263	56	VARIES	263	56	VARIES	263	56	VARIES	263	56	VARIES	263	56	VARIES	263	56	VARIES	263
4t1	UNDER BEAMS AT ABUTMENTS		8	4'-8	25	8	4'-8	25	8	4'-8	25	8	4'-8	25	8	4'-10	26	8	4'-10	26	8	4'-10	26
	PILE SPIRAL - NO. 2 BAR		10	38'-6	64	12	38'-6	77	14	38'-6	90	18	38'-6	116	20	38'-6	128	20	38'-6	128	22	38'-6	141
	SPIRAL SPACER $L\frac{7}{8}\times\frac{7}{8}\times\frac{1}{8}\times$ 0.70		20	1'-10	26	24	1'-10	32	28	1'-10	37	36	1'-10	47	40	1'-10	52	40	1'-10	52	44	1'-10	58
	REINFORCING STEEL (LBS.)				16,951			18,566			21,107			25,886			28,213			30,129			31,979
	SEE BARRIER RAIL DETAILS (LBS.)				3870			4226			4784			5809			6245			6682			7160
	SEE OPEN RAIL DETAILS (LBS.)				4215			4734			5444			7095			7691			8240			8752

CONCRETE PLACEMENT QUANTITIES

(SUPERSTRUCTURE PLUS INTEGRAL ABUTMENTS)

			46'-8	55'-0	67'-6	80'-0	90'-0	100'-0	110'-0
SLAB, AND ABUT. DIAPHRAGM	WITH BARRIER RAIL	CU.YD.	55.1	60.8	72.5	89.7	102.4	109.7	116.9
	WITH OPEN RAIL	CU.YD.	56.7	62.6	74.7	92.3	105.3	113.0	120.5
PAVING BLOCKS		CU.YD.	1.2	1.2	1.2	1.2	1.2	1.2	1.2
ABUTMENT WINGS		CU.YD.	6.9	6.9	6.9	6.9	6.9	6.9	6.9
ABUTMENT FOOTINGS		CU.YD.	21.7	21.7	21.7	29.5	29.5	29.5	29.5

ESTIMATED QUANTITIES

(SUPERSTRUCTURE PLUS INTEGRAL ABUTMENTS)

			46'-8	55'-0	67'-6	80'-0	90'-0	100'-0	110'-0
NO. OF STEEL H-PILES FOR TWO ABUTMENTS (HP10X42)		NO.	10	12	14	18	20	20	22
STRUCTURAL CONCRETE, (BRIDGE)	WITH BARRIER RAIL	CU.YD.	84.9	90.6	102.3	127.3	140.0	147.3	154.5
	WITH OPEN RAIL	CU.YD.	86.5	92.4	104.5	129.9	142.9	150.6	158.1
CONCRETE RAIL (BARRIER OR OPEN)		L.F.	127.3	144.0	169.0	214.0	234.0	254.0	274.0
REINFORCING STEEL	WITH BARRIER RAIL	LBS.	20,821	22,792	25,891	31,695	34,458	36,811	39,139
	WITH OPEN RAIL	LBS.	21,166	23,300	26,551	32,981	35,904	38,369	40,731
STRUCTURAL STEEL	WITH BARRIER RAIL	LBS.	1186	1180	1224	1264	1344	1344	1344
	WITH OPEN RAIL	LBS.	902	896	896	896	920	920	920

BENT BAR DETAILS

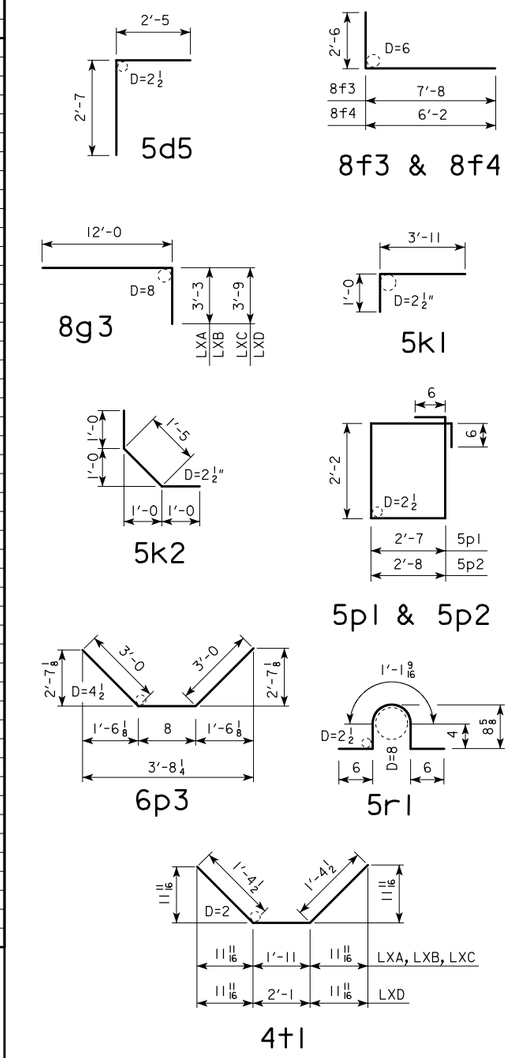

NOTE: ALL DIMENSIONS ARE OUT TO OUT. D= PIN DIAMETER

LATEST REVISION DATE :

APPROVED BY

STANDARD DESIGN - 24' ROADWAY, SINGLE SPAN BRIDGE

PRETENSIONED PRESTRESSED CONCRETE BEAM BRIDGES

JANUARY, 2005

HS20-44 LOADING

IOWA DEPARTMENT OF TRANSPORTATION - HIGHWAY DIVISION

DECK & ABUTMENT REINF.

0° SKEW

H24S1-08-05

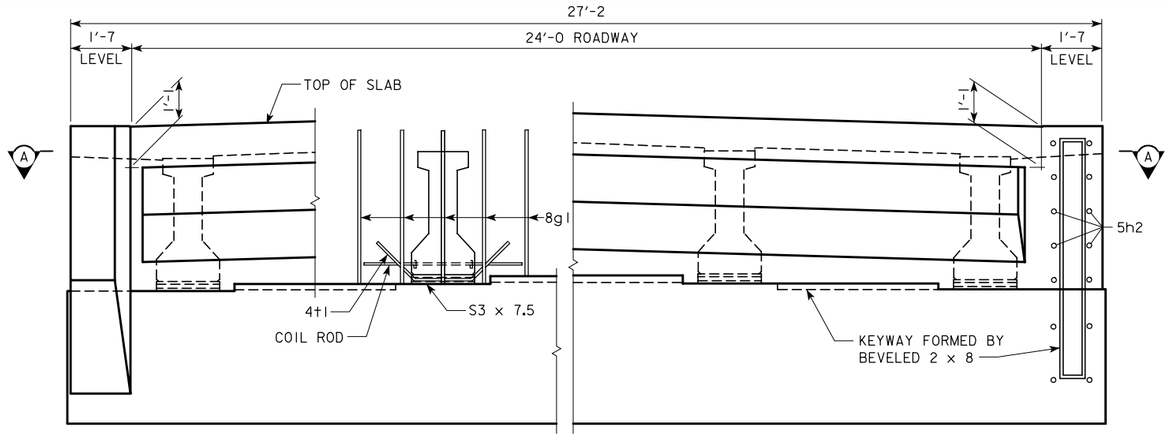

PART REAR ELEVATION AT ABUTMENT

NOTE: BARRIER RAIL NOT SHOWN
(SHOWN FOR SOLID BARRIER RAIL)

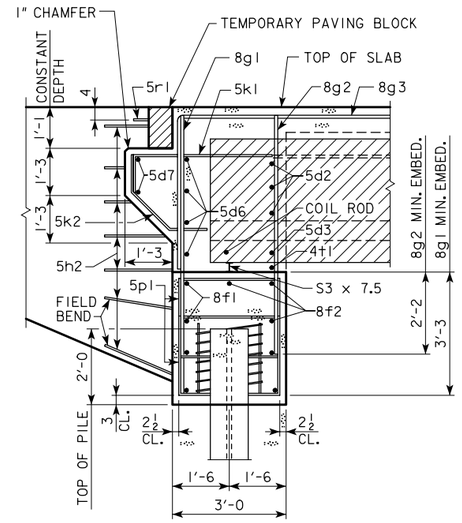

PART SECTION B-B

NOTE:
THE SPIRAL AT THE TOP OF EACH PILE TO BE 7 TURNS OF No. 2 BAR, 21" DIAMETER, 3" PITCH WITH 2 - L $\frac{7}{8} \times \frac{7}{8} \times \frac{1}{8}$ SPACERS PUNCHED TO HOLD SPIRAL.

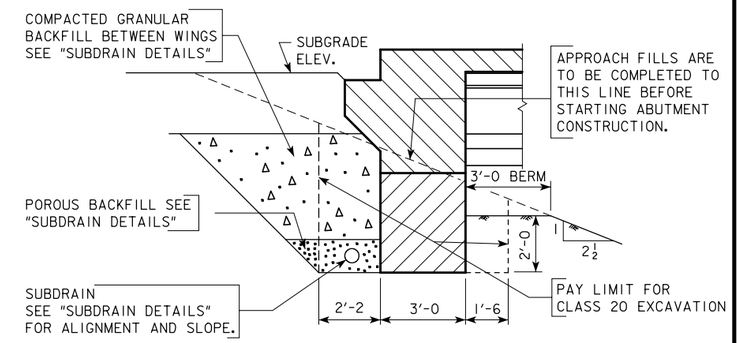

ABUTMENT EXCAVATION DETAILS

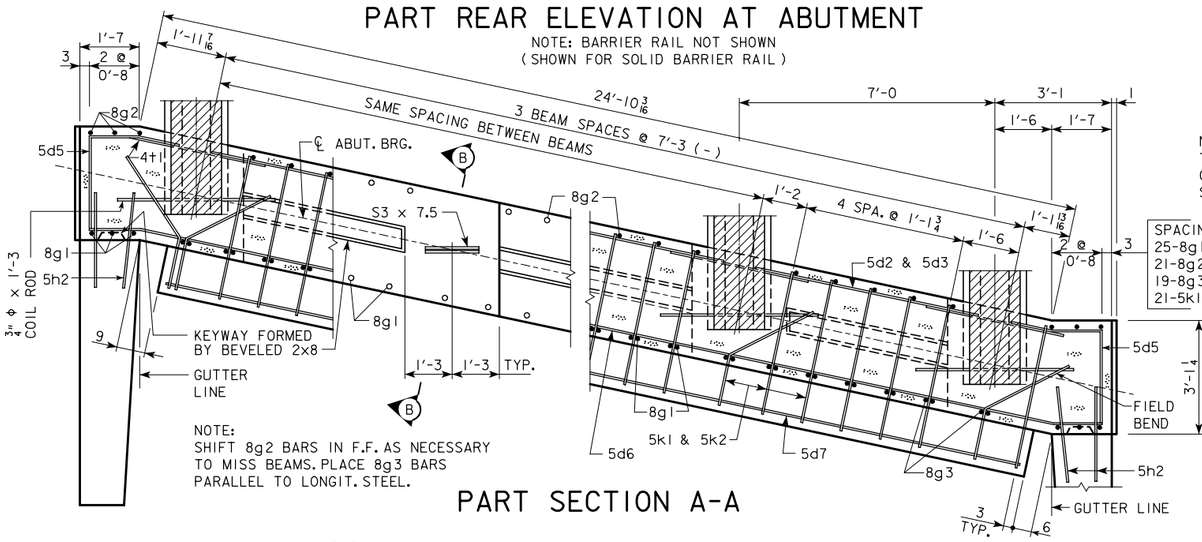

SPACING FOR:
25-8g1 BACK FACE
21-8g2 FRONT FACE
19-8g3 BACK FACE
21-5k1 & 5k2 BACK FACE

NOTE:
SHIFT 8g2 BARS IN F.F. AS NECESSARY TO MISS BEAMS. PLACE 8g3 BARS PARALLEL TO LONGIT. STEEL.

PART SECTION A-A

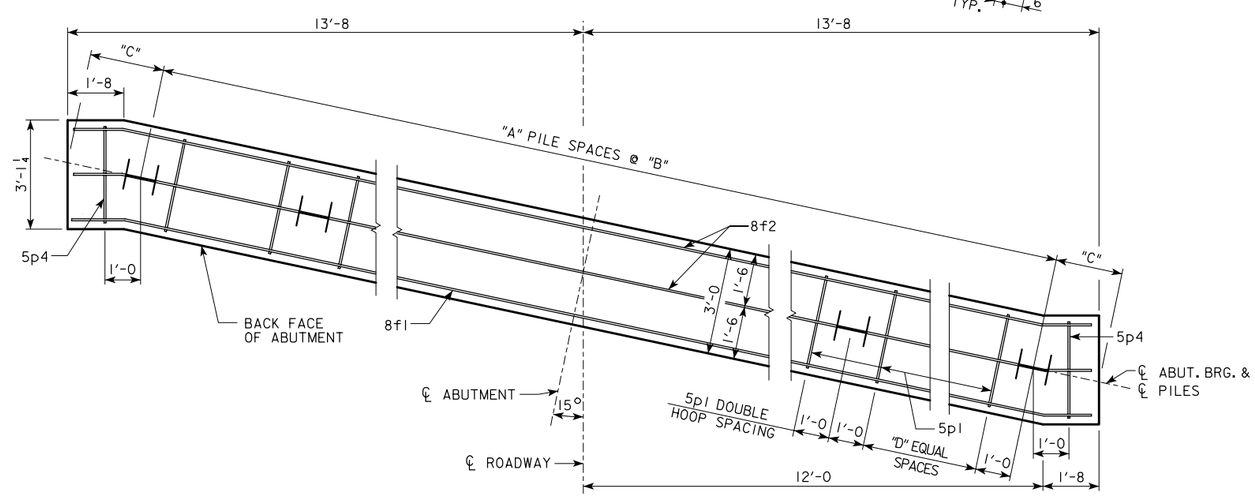

ABUTMENT PILE PLAN

ABUTMENT PILE SPACING			
DIMENSION OR NO.	℄ TO ℄ ABUTMENT BEARING		
	46'-8	55'-0	67'-6
"A" PILE SPACES	4	5	6
"B" (FT. - IN.)	6'-2	4'-11	4'-1
"C" (FT. - IN.)	1'-9 13/16	1'-10 5/16	1'-10 13/16
"D" EQUAL SPACES	5	3	3
NO. OF PILES PER ABUT.	5	6	7
DESIGN PILE LOAD (TONS)	36	33	33

ABUTMENT NOTES:

MINIMUM CLEAR DISTANCE FROM FACE OF CONCRETE TO NEAR REINFORCING BAR IS TO BE 2" UNLESS OTHERWISE NOTED OR SHOWN.

LATEST REVISION DATE :

APPROVED BY

STANDARD DESIGN - 24' ROADWAY, SINGLE SPAN BRIDGE

PRETENSIONED PRESTRESSED CONCRETE BEAM BRIDGES

JANUARY, 2005 HS20-44 LOADING

IOWA DEPARTMENT OF TRANSPORTATION - HIGHWAY DIVISION

ABUTMENT DETAILS

15° SKEW A & B BEAMS

H24SI-09-05

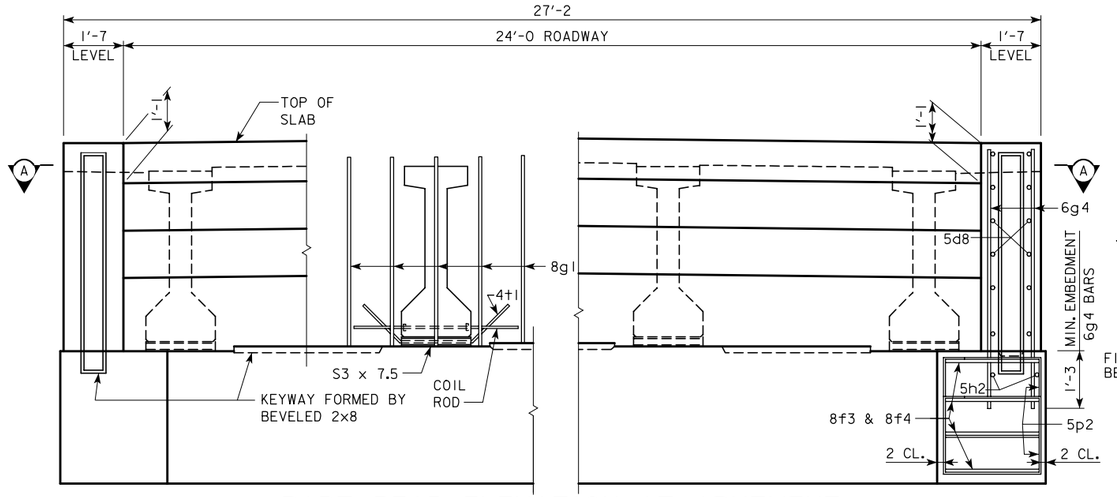

PART REAR ELEVATION AT ABUTMENT

NOTE: BARRIER RAIL AND WINGS NOT SHOWN.
(SHOWN FOR SOLID BARRIER RAIL)

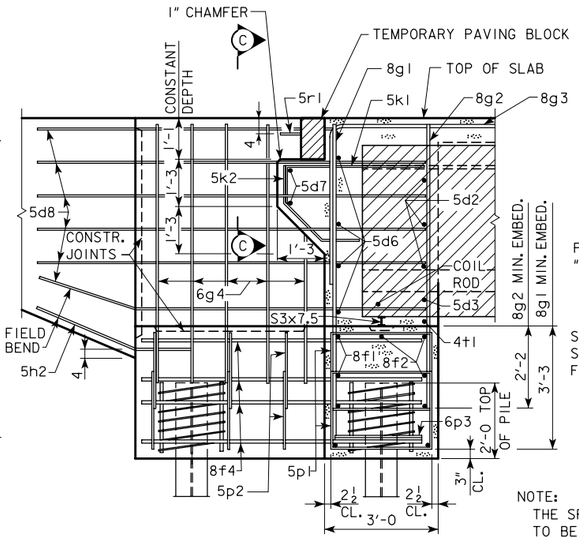

PART SECTION B - B

NOTE:
THE SPIRAL AT THE TOP OF EACH PILE TO BE 7 TURNS OF No. 2 BAR, 21" DIAMETER, 3" PITCH WITH 2 - L 7/8 x 7/8 x 1/8 SPACERS PUNCHED TO HOLD SPIRAL.

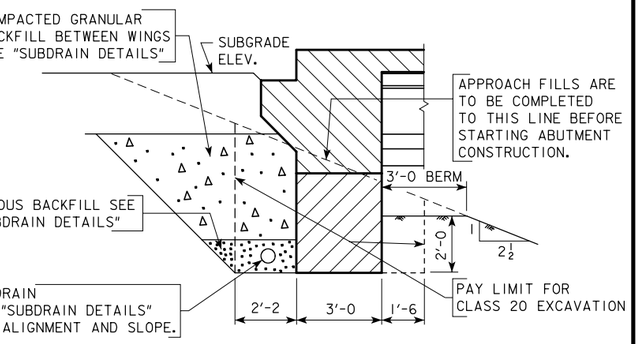

ABUTMENT EXCAVATION DETAILS

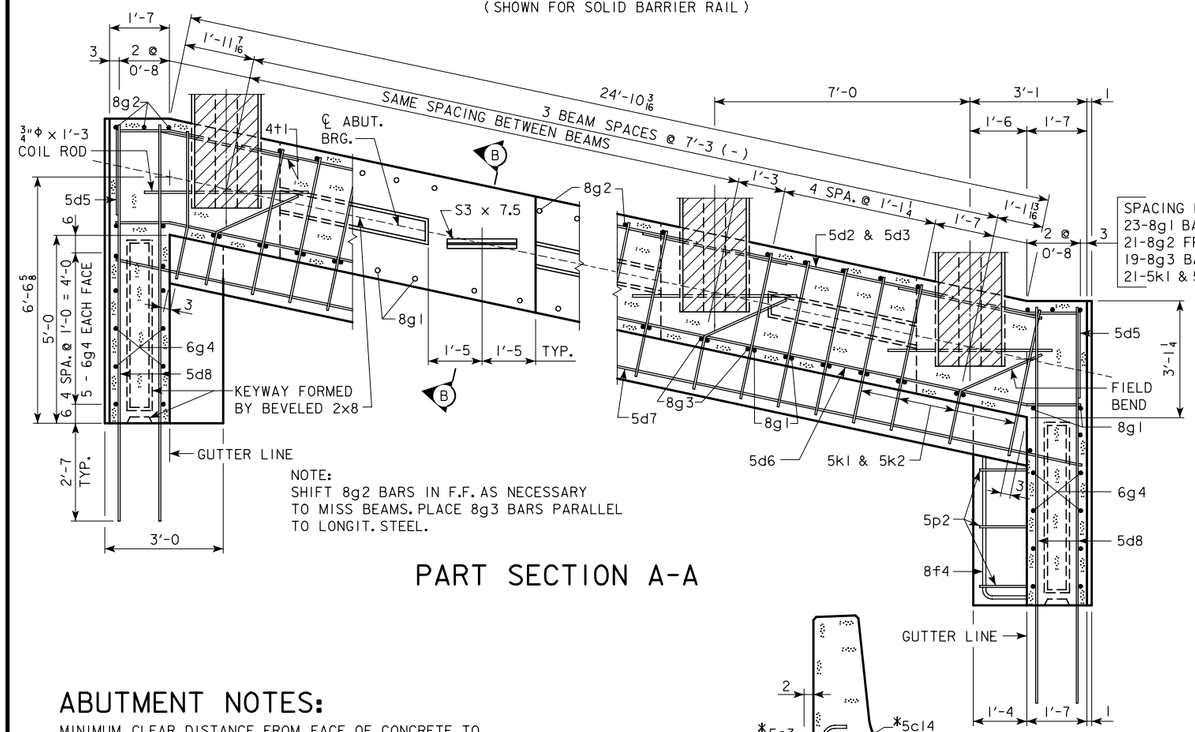

NOTE:
SHIFT 8g2 BARS IN F.F. AS NECESSARY TO MISS BEAMS. PLACE 8g3 BARS PARALLEL TO LONGIT. STEEL.

PART SECTION A-A

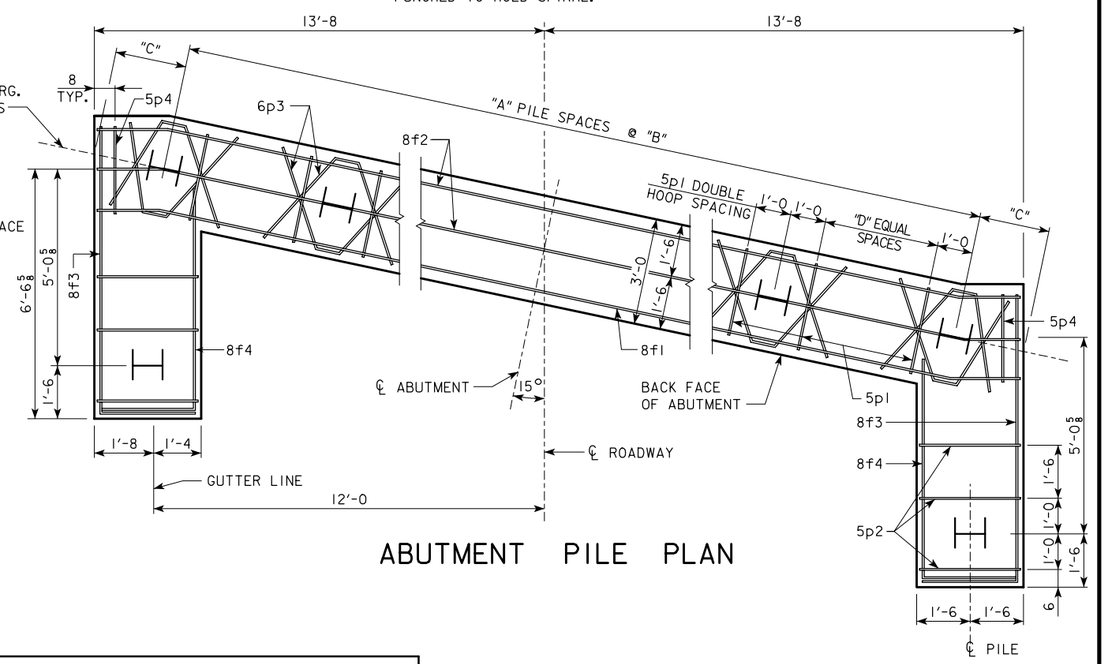

ABUTMENT PILE PLAN

ABUTMENT NOTES:

MINIMUM CLEAR DISTANCE FROM FACE OF CONCRETE TO NEAR REINFORCING BAR IS TO BE 2" UNLESS OTHERWISE NOTED OR SHOWN.

* NOTE: SEE BARRIER RAIL SHEET FOR DETAILS. REINFORCING BARS 5c3 AND 5c14 ARE INCLUDED IN SUPERSTRUCTURE QUANTITIES.

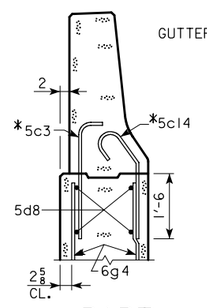

PART SECTION C-C

ABUTMENT PILE SPACING

DIMENSION OR NO.	℄ TO ℄ ABUTMENT BEARING			
	80'-0	90'-0	100'-0	110'-0
"A" PILE SPACES	6	7	7	8
"B" (FT - IN)	4'-1	3'-6	3'-6	3'-1
"C" (FT - IN)	1'-10 13/16	1'-10 13/16	1'-10 13/16	1'-9 13/16
"D" EQUAL SPACES	3	2	2	2
NO. OF PILES PER ABUT.	9	10	10	11
DESIGN PILE LOAD (TONS)	35	35	37	35

LATEST REVISION DATE :

APPROVED BY

STANDARD DESIGN - 24' ROADWAY, SINGLE SPAN BRIDGE

PRETENSIONED PRESTRESSED CONCRETE BEAM BRIDGES

JANUARY, 2005 HS20-44 LOADING

IOWA DEPARTMENT OF TRANSPORTATION - HIGHWAY DIVISION

ABUTMENT DETAILS

15° SKEW C & D BEAMS

H24SI-10-05

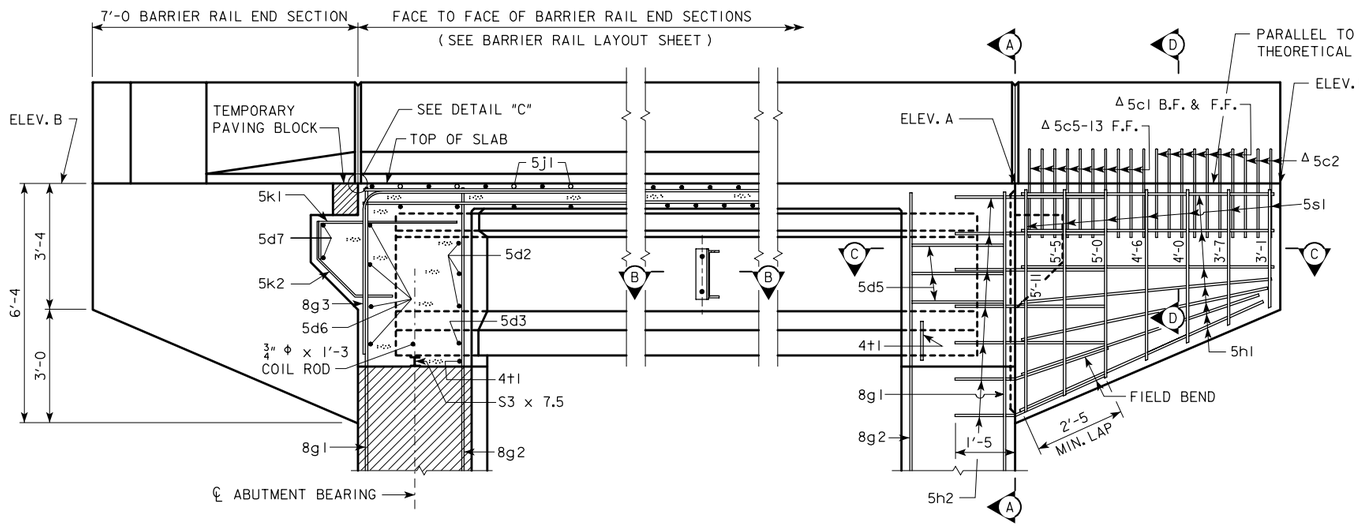

PART LONGITUDINAL SECTION NEAR GUTTER

(FOR DETAILS OF INTERMEDIATE DIAPHRAGM SEE SHEET H24SI-30-05)

PART END VIEW AT ABUTMENT

NOTE: PROVIDE ELEVATIONS A AND B IN THE BRIDGE PLAN SHEETS

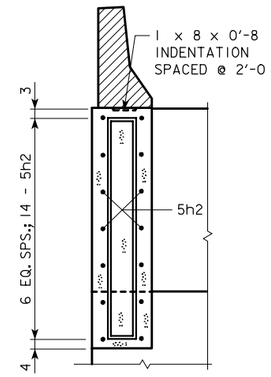

SECTION A-A

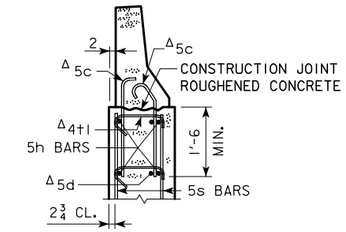

SECTION D-D

Δ NOTE:
SEE END SECTION DETAILS IN THESE PLANS FOR DETAILS OF BARRIER RAIL END SECTION AND SPACING FOR 5c BARRIER RAIL BARS. REINFORCING BARS "5c", "5d" AND "4t1" ARE INCLUDED IN THE SUPERSTRUCTURE QUANTITIES.

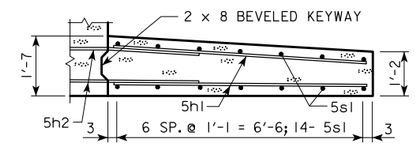

PART SECTION C-C

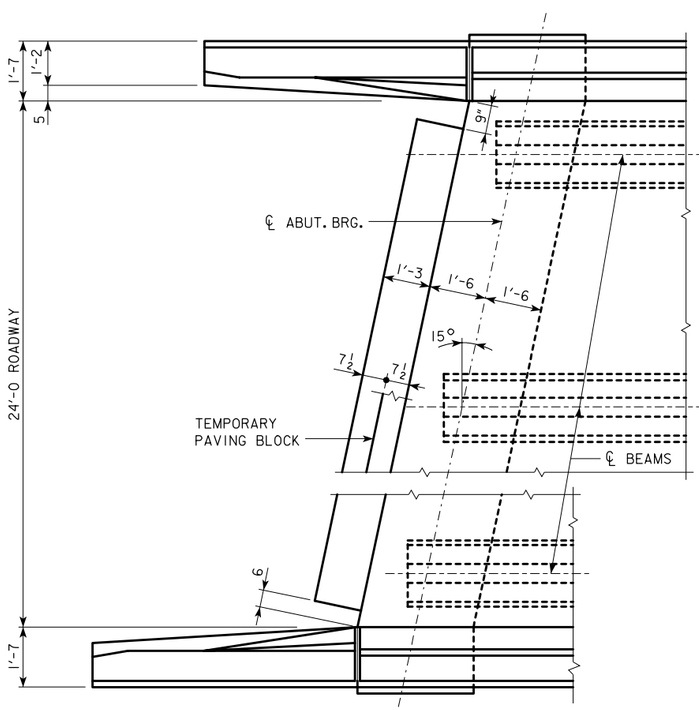

PART PLAN

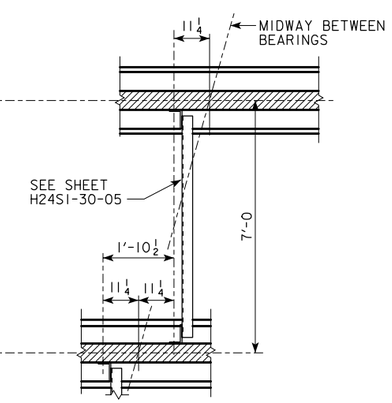

SECTION B-B

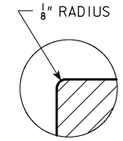

DETAIL "C"

(TEMPORARY PAVING BLOCK NOT SHOWN)

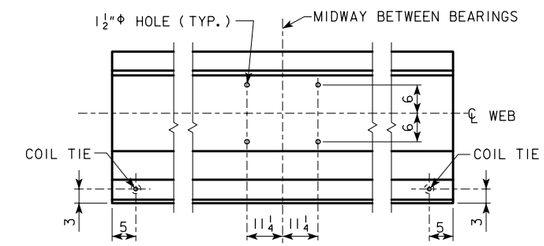

LOCATION OF BEAM COIL TIES AND STEEL DIAPHRAGM BOLT HOLES

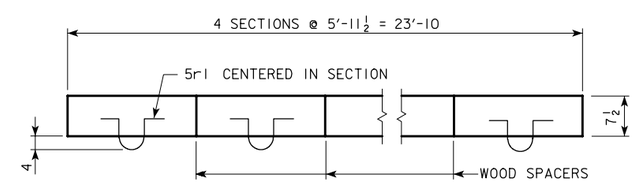

PLAN OF TEMPORARY PAVING BLOCK

NOTE: LINE PAVING NOTCH WITH TARPAPER BEFORE PLACING THE TEMPORARY PAVING BLOCK.

LATEST REVISION DATE :

APPROVED BY

STANDARD DESIGN - 24' ROADWAY, SINGLE SPAN BRIDGE

PRETENSIONED PRESTRESSED CONCRETE BEAM BRIDGES

JANUARY, 2005 HS20-44 LOADING

IOWA DEPARTMENT OF TRANSPORTATION - HIGHWAY DIVISION

LONGITUDINAL SECTION

15° SKEW A & B BEAMS

H24SI-11-05

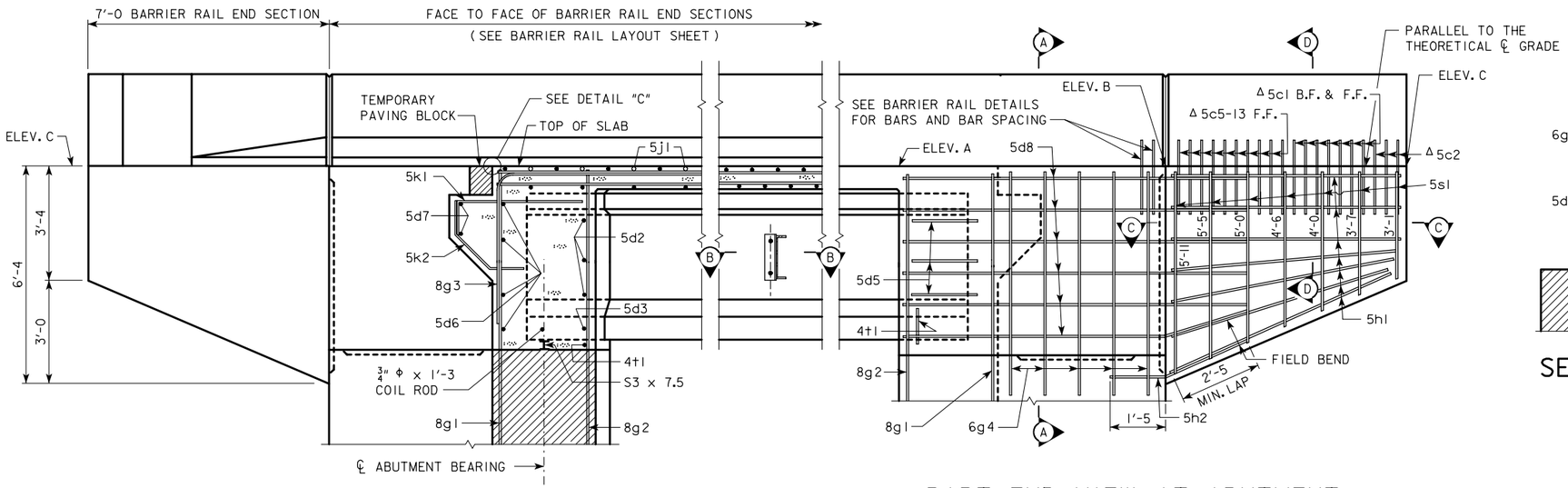

PART LONGITUDINAL SECTION NEAR GUTTER

(FOR DETAILS OF INTERMEDIATE DIAPHRAGM SEE SHEET H24SI-30-05)

PART END VIEW AT ABUTMENT

NOTE: PROVIDE ELEVATIONS A, B, AND C IN THE BRIDGE PLAN SHEETS

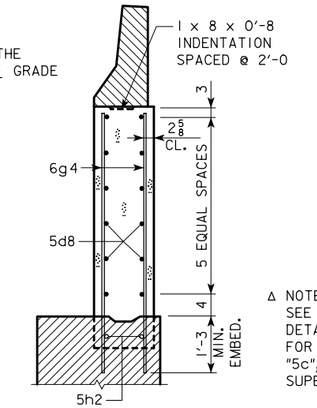

SECTION A-A

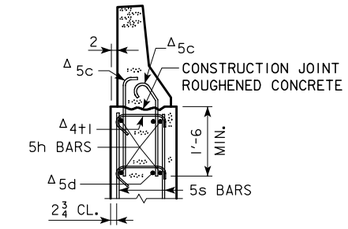

SECTION D-D

Δ NOTE:
SEE END SECTION DETAILS IN THESE PLANS FOR DETAILS OF BARRIER RAIL END SECTION AND SPACING FOR 5c BARRIER RAIL BARS. REINFORCING BARS "5c", "5d" AND "4t1" ARE INCLUDED IN THE SUPERSTRUCTURE QUANTITIES.

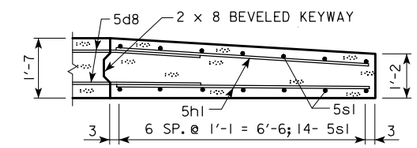

PART SECTION C-C

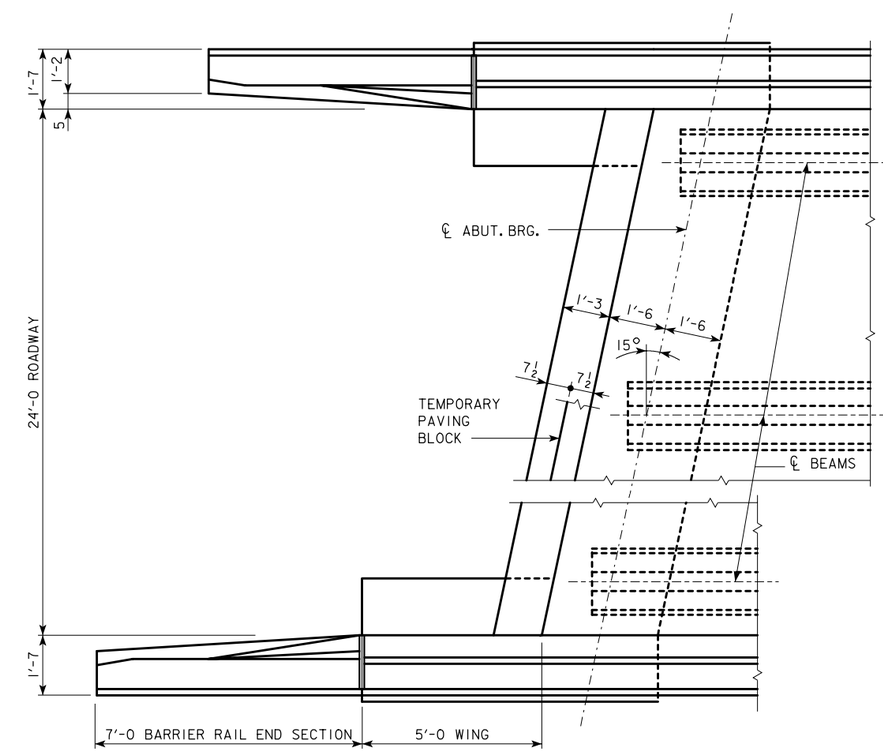

PART PLAN

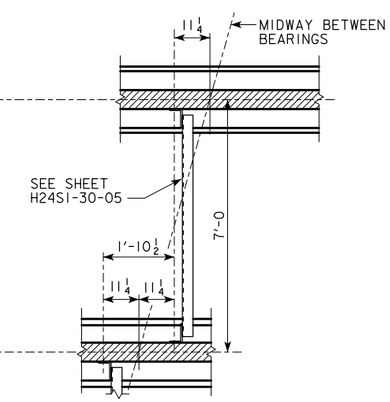

SECTION B-B

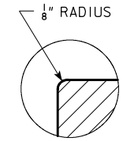

DETAIL "C"

(TEMPORARY PAVING BLOCK NOT SHOWN)

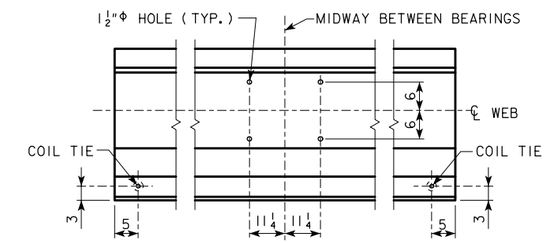

LOCATION OF BEAM COIL TIES AND STEEL DIAPHRAGM BOLT HOLES

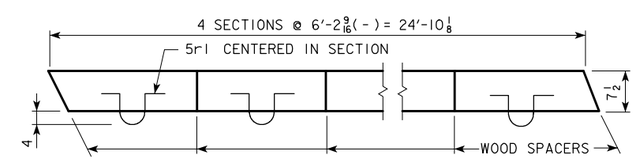

PLAN OF TEMPORARY PAVING BLOCK

NOTE: LINE PAVING NOTCH WITH TAR PAPER BEFORE PLACING THE TEMPORARY PAVING BLOCK.

LATEST REVISION DATE :

APPROVED BY

STANDARD DESIGN - 24' ROADWAY, SINGLE SPAN BRIDGE

PRETENSIONED PRESTRESSED CONCRETE BEAM BRIDGES

JANUARY, 2005 HS20-44 LOADING

IOWA DEPARTMENT OF TRANSPORTATION - HIGHWAY DIVISION

LONGITUDINAL SECTION

15° SKEW C & D BEAMS

H24SI-12-05

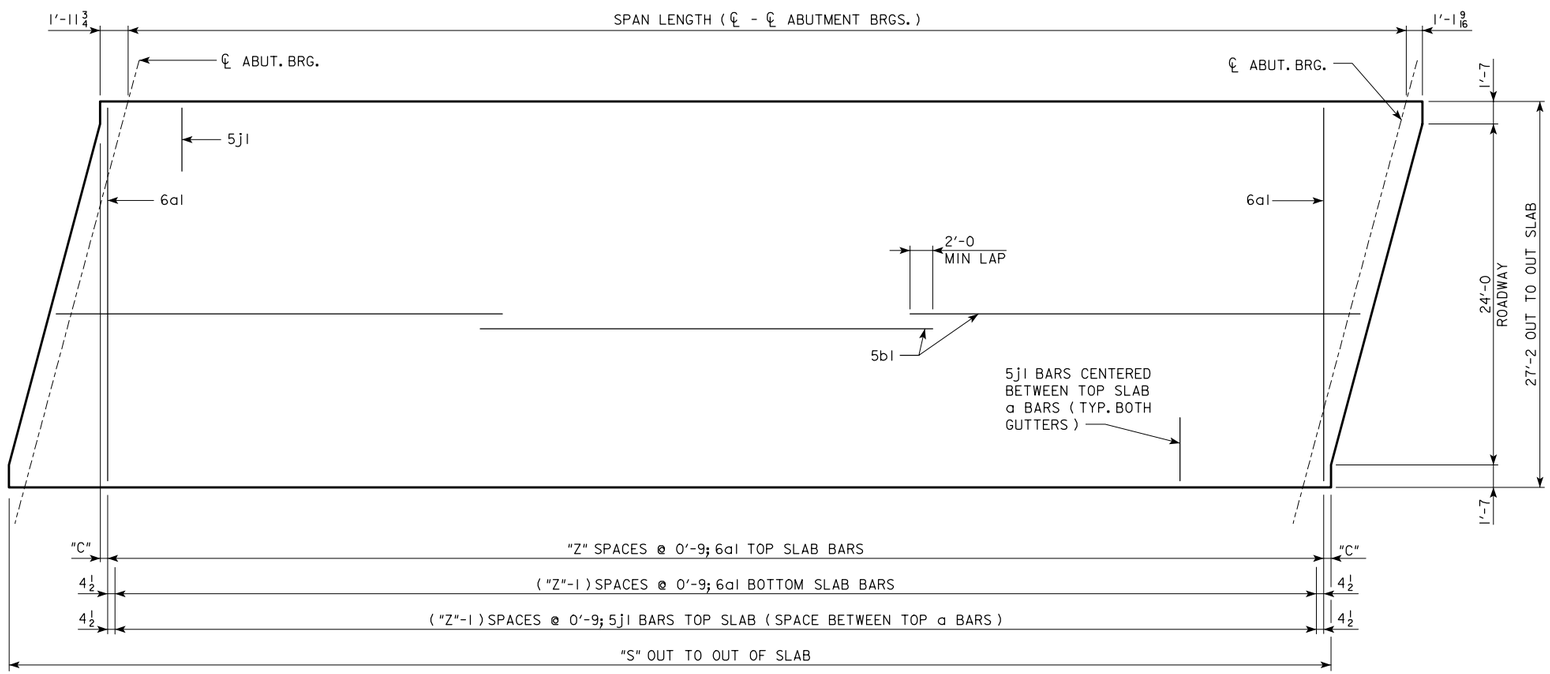

SLAB LAYOUT

(LEFT AHEAD SKEW SHOWN, RIGHT AHEAD SKEW SIMILAR)

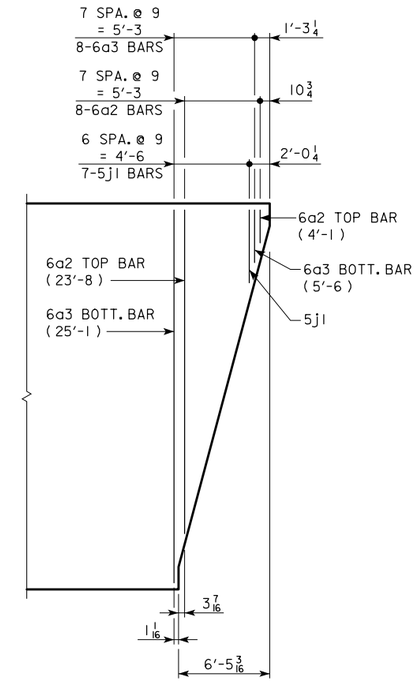

END OF SLAB REINFORCING

(TYPICAL EACH END OF DECK)

SPAN LENGTH (℄ - ℄ ABUTMENT BRGS.)		46'-8	55'-0	67'-6	80'-0	90'-0	100'-0	110'-0
LOCATION OF EXTREME 6a1 TOP BAR FROM END OF SLAB	"C"	3 9/16	4 1/16	2 9/16	5 9/16	2 9/16	4 1/16	5 9/16
NO. OF SPACES FOR 6a1 TOP BARS	"Z"	57	68	85	101	115	128	141
OUT TO OUT OF SLAB	"S"	49'-9 1/4	58'-1 1/4	70'-7 1/4	83'-1 1/4	93'-1 1/4	103'-1 1/4	113'-1 1/4
VERTICAL CURVE TOP OF SLAB TO ABUTMENT TOP AT ℄ ABUTMENT BEARING	"U"	3'-7 11/16	3'-7 11/16	4'-2 11/16	4'-8 11/16	5'-5 5/16	5'-5 7/8	5'-5 13/16
STRAIGHT GRADE TOP OF SLAB TO ABUTMENT TOP AT ℄ ABUTMENT BEARING	"U"	3'-7 7/8	3'-7 7/8	4'-3 1/16	4'-9 1/8	5'-5 7/8	5'-6 5/8	5'-6 11/16
D.L. ABUTMENT REACTION (D.L. + F.W.S.)	KIPS	234.9	272.4	327.8	362.8	419.0	453.1	487.1
L.L. ABUTMENT REACTION (HS20-44) NO IMPACT	KIPS	115.2	119.6	124.2	127.2	129.0	130.6	131.8

LATEST REVISION DATE :

APPROVED BY

STANDARD DESIGN - 24' ROADWAY, SINGLE SPAN BRIDGE

PRETENSIONED PRESTRESSED CONCRETE BEAM BRIDGES

JANUARY, 2005 HS20-44 LOADING

IOWA DEPARTMENT OF TRANSPORTATION - HIGHWAY DIVISION

SUPERSTRUCTURE
15° SKEW

H24S1-13-05

REINFORCING BAR LIST

ONE SUPERSTRUCTURE AND TWO ABUTMENTS

BRIDGE LENGTH

BAR	LOCATION	SHAPE	46'-8 LXA NO.	46'-8 LXA LENGTH	46'-8 LXA WEIGHT	55'-0 LXA NO.	55'-0 LXA LENGTH	55'-0 LXA WEIGHT	67'-6 LXB NO.	67'-6 LXB LENGTH	67'-6 LXB WEIGHT	80'-0 LXC NO.	80'-0 LXC LENGTH	80'-0 LXC WEIGHT	90'-0 LXD NO.	90'-0 LXD LENGTH	90'-0 LXD WEIGHT	100'-0 LXD NO.	100'-0 LXD LENGTH	100'-0 LXD WEIGHT	110'-0 LXD NO.	110'-0 LXD LENGTH	110'-0 LXD WEIGHT
6a1	SLAB TRANSVERSE, TOP & BOTTOM		115	26'-10	4635	137	26'-10	5522	171	26'-10	6892	203	26'-10	8182	231	26'-10	9311	257	26'-10	10,359	283	26'-10	11,406
6a2	SLAB TRANSVERSE END, TOP		16	*	335	16	*	335	16	*	335	16	*	335	16	*	335	16	*	335	16	*	335
6a3	SLAB TRANSVERSE END, BOTTOM		16	**	369	16	**	369	16	**	369	16	**	369	16	**	369	16	**	369	16	**	369
5b1	SLAB LONGITUDINAL TOP & BOTTOM		134	25'-9	3599	134	29'-11	4182	134	36'-2	5055	201	29'-0	6080	201	32'-4	6779	201	35'-8	7478	201	39'-0	8177
5d2	ABUTMENT DIAPHRAM, LONGITUDINAL		18	6'-4	119	18	6'-1	115	18	6'-1	115	18	6'-1	115	18	6'-3	118	18	6'-3	118	18	6'-3	118
5d3	ABUTMENT DIAPHRAM, LONGITUDINAL		6	5'-5	34	6	5'-2	33	6	5'-2	33	6	5'-2	33	6	5'-0	32	6	5'-0	32	6	5'-0	32
5d5	ABUTMENT DIAPHRAGM, LONGITUDINAL - END		12	5'-0	63	12	5'-0	63	12	5'-0	63	12	5'-0	63	12	5'-0	63	12	5'-0	63	12	5'-0	63
5d6	ABUTMENT DIAPHRAGM LONGITUDINAL - B.F.		8	27'-8	231	8	27'-8	231	8	27'-8	231	8	27'-8	231	8	27'-8	231	8	27'-8	231	8	27'-8	231
5d7	PAVING NOTCH, LONGITUDINAL		4	23'-5	98	4	23'-5	98	4	23'-5	98	4	27'-8	116	4	27'-8	116	4	27'-8	116	4	27'-8	116
5d8	ABUTMENT DIAPH. WING EXT. LONGIT.		-	-	-	-	-	-	-	-	-	48	10'-6	526	48	10'-6	526	48	10'-6	526	48	10'-6	526
8f1	ABUTMENT FOOTING LONGITUDINAL - B.F.		8	27'-10	595	8	27'-10	595	8	27'-10	595	8	27'-10	595	8	27'-10	595	8	27'-10	595	8	27'-10	595
8f2	ABUTMENT FOOTING LONGITUDINAL - F.F.		10	27'-10	744	10	27'-10	744	10	27'-10	744	10	27'-10	744	10	27'-10	744	10	27'-10	744	10	27'-10	744
8f3	ABUTMENT EXTENSION LONGITUDINAL		-	-	-	-	-	-	-	-	-	16	10'-2	435	16	10'-2	435	16	10'-2	435	16	10'-2	435
8f4	ABUTMENT EXTENSION LONGITUDINAL		-	-	-	-	-	-	-	-	-	16	9'-0	385	16	9'-0	385	16	9'-0	385	16	9'-0	385
8g1	ABUTMENT VERTICAL - B.F.		50	6'-7	879	50	6'-7	879	50	7'-2	957	46	7'-8	942	46	8'-5	1034	46	8'-5	1034	46	8'-5	1034
8g2	ABUTMENT VERTICAL - F.F.		42	5'-6	617	42	5'-6	617	42	6'-1	683	42	6'-7	739	42	7'-4	823	42	7'-4	823	42	7'-4	823
8g3	ABUTMENT DIAPHRAGM VERTICAL - B.F.		38	15'-3	1548	38	15'-3	1548	38	15'-3	1548	38	15'-9	1598	38	15'-9	1598	38	15'-9	1598	38	15'-9	1598
6g4	ABUT. DIAPH. WING EXT. VERT.		-	-	-	-	-	-	-	-	-	40	5'-8	341	40	6'-5	386	40	6'-5	386	40	6'-5	386
5j1	SLAB TRANSV. TOP AT RAIL		128	6'-3	835	150	6'-3	978	184	6'-3	1200	216	6'-3	1409	244	6'-3	1591	270	6'-3	1761	296	6'-3	1930
5h1	ABUT. WING HORIZONTAL		56	6'-8	390	56	6'-8	390	56	6'-8	390	56	6'-8	390	56	6'-8	390	56	6'-8	390	56	6'-8	390
5h2	ABUTMENT TO WING ANCHOR		56	4'-0	234	56	4'-0	234	56	4'-0	234	8	4'-0	34	8	4'-0	34	8	4'-0	34	8	4'-0	34
5k1	PAVING NOTCH, TRANSVERSE		42	4'-11	216	42	4'-11	216	42	4'-11	216	42	4'-11	216	42	4'-11	216	42	4'-11	216	42	4'-11	216
5k2	PAVING NOTCH, TRANSVERSE		42	3'-5	150	42	3'-5	150	42	3'-5	150	42	3'-5	150	42	3'-5	150	42	3'-5	150	42	3'-5	150
5p1	ABUTMENT HOOPS		96	10'-6	1052	80	10'-6	877	96	10'-6	1052	96	10'-6	1052	84	10'-6	920	84	10'-6	920	96	10'-6	1052
5p2	ABUTMENT EXT.HOOPS		-	-	-	-	-	-	-	-	-	24	10'-8	268	24	10'-8	268	24	10'-8	268	24	10'-8	268
6p3	ABUT. BOTT. AT PILES		-	-	-	-	-	-	-	-	-	28	6'-8	281	32	6'-8	321	32	6'-8	321	36	6'-8	361
5p4	ABUTMENT HOOPS AT ENDS		8	10'-9	90	8	10'-9	90	8	10'-9	90	8	10'-9	90	8	10'-9	90	8	10'-9	90	8	10'-9	90
5r1	PAVING BLOCK LIFTING HOOPS		8	2'-10	24	8	2'-10	24	8	2'-10	24	8	2'-10	24	8	2'-10	24	8	2'-10	24	8	2'-10	24
5s1	WING, VERTICAL		56	VARIES	263	56	VARIES	263	56	VARIES	263	56	VARIES	263	56	VARIES	263	56	VARIES	263	56	VARIES	263
4t1	UNDER BEAMS AT ABUTMENTS		8	4'-8	25	8	4'-8	25	8	4'-8	25	8	4'-8	25	8	4'-10	26	8	4'-10	26	8	4'-10	26
	PILE SPIRAL - NO. 2 BAR		10	38'-6	64	12	38'-6	77	14	38'-6	90	18	38'-6	116	20	38'-6	128	20	38'-6	128	22	38'-6	141
	SPIRAL SPACER L $\frac{7}{8}\times\frac{7}{8}\times\frac{1}{8}\times$ 0.70		20	1'-10	26	24	1'-10	32	28	1'-10	37	36	1'-10	47	40	1'-10	52	40	1'-10	52	44	1'-10	58
	REINFORCING STEEL (LBS.)				17,235			18,687			21,489			26,194			28,353			30,270			32,376
	SEE BARRIER RAIL DETAILS (LBS.)				3870			4226			4784			5809			6245			6682			7160
	SEE OPEN RAIL DETAILS (LBS.)				4215			4734			5444			7095			7691			8240			8752

* VARIES FROM 4'-1 TO 23'-8 ** VARIES FROM 5'-6 TO 25'-1

CONCRETE PLACEMENT QUANTITIES
(SUPERSTRUCTURE PLUS INTEGRAL ABUTMENTS)

			46'-8	55'-0	67'-6	80'-0	90'-0	100'-0	110'-0
SLAB, AND ABUT. DIAPHRAGM	WITH BARRIER RAIL	CU.YD.	56.0	61.6	73.5	90.8	103.7	111.0	118.2
	WITH OPEN RAIL	CU.YD.	57.6	63.4	75.7	93.4	106.6	114.2	121.7
PAVING BLOCKS		CU.YD.	1.2	1.2	1.2	1.2	1.2	1.2	1.2
ABUTMENT WINGS		CU.YD.	6.9	6.9	6.9	6.9	6.9	6.9	6.9
ABUTMENT FOOTINGS		CU.YD.	22.5	22.5	22.5	30.2	30.2	30.2	30.2

ESTIMATED QUANTITIES
(SUPERSTRUCTURE PLUS INTEGRAL ABUTMENTS)

			46'-8	55'-0	67'-6	80'-0	90'-0	100'-0	110'-0
NO. OF STEEL H-PILES FOR TWO ABUTS. (HP10X42)		NO.	10	12	14	18	20	20	22
STRUCTURAL CONCRETE, (BRIDGE)	WITH BARRIER RAIL	CU.YD.	86.6	92.2	104.1	129.1	142.0	149.3	156.5
	WITH OPEN RAIL	CU.YD.	88.2	94.0	106.3	131.7	144.9	152.5	160.0
CONCRETE RAIL (BARRIER OR OPEN)		L.F.	127.5	144.2	169.2	214.2	234.2	254.2	274.2
REINFORCING STEEL	WITH BARRIER RAIL	LBS.	21,105	22,913	26,273	32,003	34,598	36,952	39,536
	WITH OPEN RAIL	LBS.	21,450	23,421	26,933	33,289	36,044	38,510	41,128
STRUCTURAL STEEL	WITH BARRIER RAIL	LBS.	1221	1217	1261	1301	1380	1380	1380
	WITH OPEN RAIL	LBS.	937	933	933	933	956	956	956

BENT BAR DETAILS

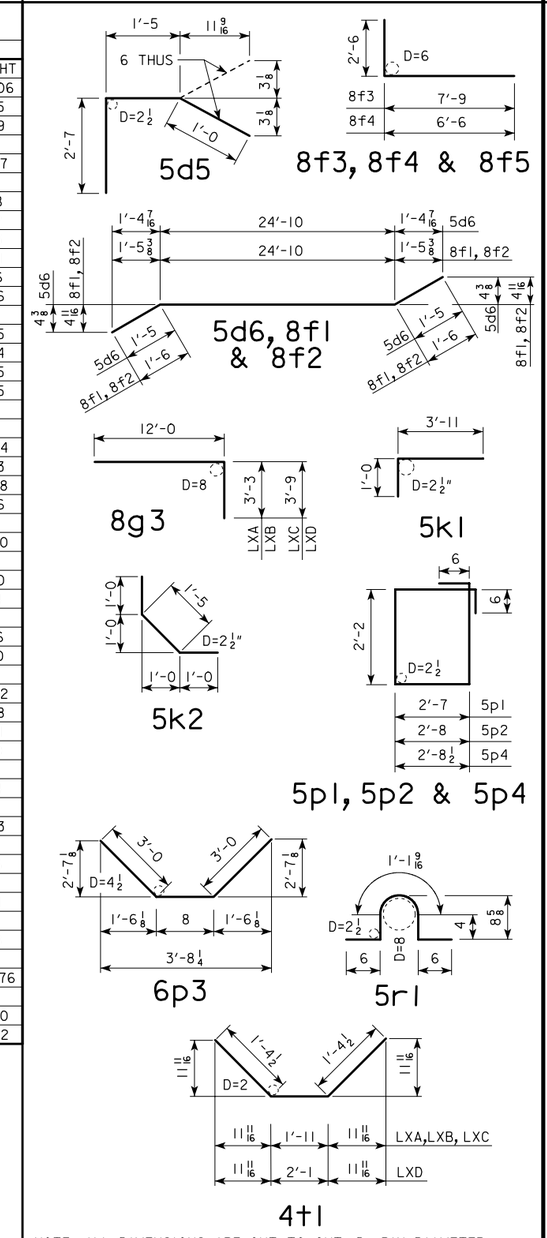

NOTE: ALL DIMENSIONS ARE OUT TO OUT. D= PIN DIAMETER

LATEST REVISION DATE :

APPROVED BY

STANDARD DESIGN - 24' ROADWAY, SINGLE SPAN BRIDGE

PRETENSIONED PRESTRESSED CONCRETE BEAM BRIDGES

JANUARY, 2005 HS20-44 LOADING

IOWA DEPARTMENT OF TRANSPORTATION - HIGHWAY DIVISION

DECK & ABUTMENT REINF. 15° SKEW

H24SI-14-05

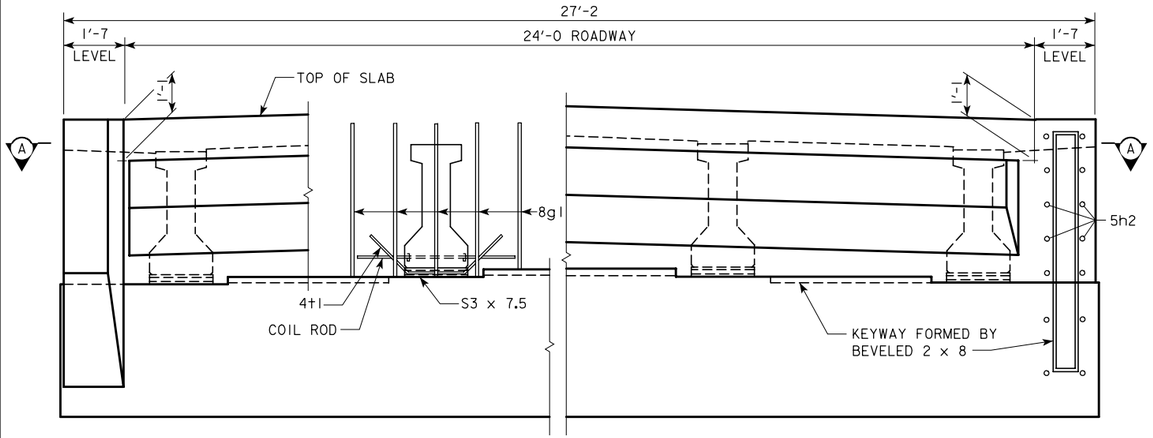

PART REAR ELEVATION AT ABUTMENT

NOTE: BARRIER RAIL NOT SHOWN.
(SHOWN FOR SOLID BARRIER RAIL)

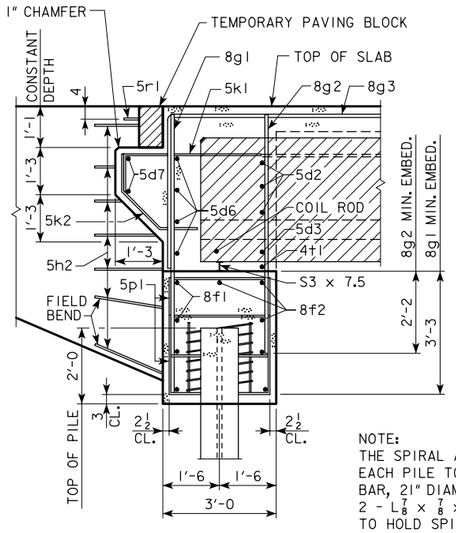

NOTE:
THE SPIRAL AT THE TOP OF EACH PILE TO BE 7 TURNS OF No. 2 BAR, 21" DIAMETER, 3" PITCH WITH 2 - L $\frac{7}{8} \times \frac{7}{8} \times \frac{1}{8}$ SPACERS PUNCHED TO HOLD SPIRAL.

PART SECTION B-B

ABUTMENT PILE SPACING			
DIMENSION OR NO.	℄ TO ℄ ABUTMENT BEARING		
	46'-8	55'-0	67'-6
"A" PILE SPACES	4	5	6
"B" (FT. - IN.)	6'-11	5'-6	4-7
"C" (FT. - IN.)	1'-11 $\frac{3}{8}$	2'-0 $\frac{3}{8}$	2'-0 $\frac{3}{8}$
"D" EQUAL SPACES	5	4	3
NO. OF PILES PER ABUT.	5	6	7
DESIGN PILE LOAD (TONS)	37	34	34

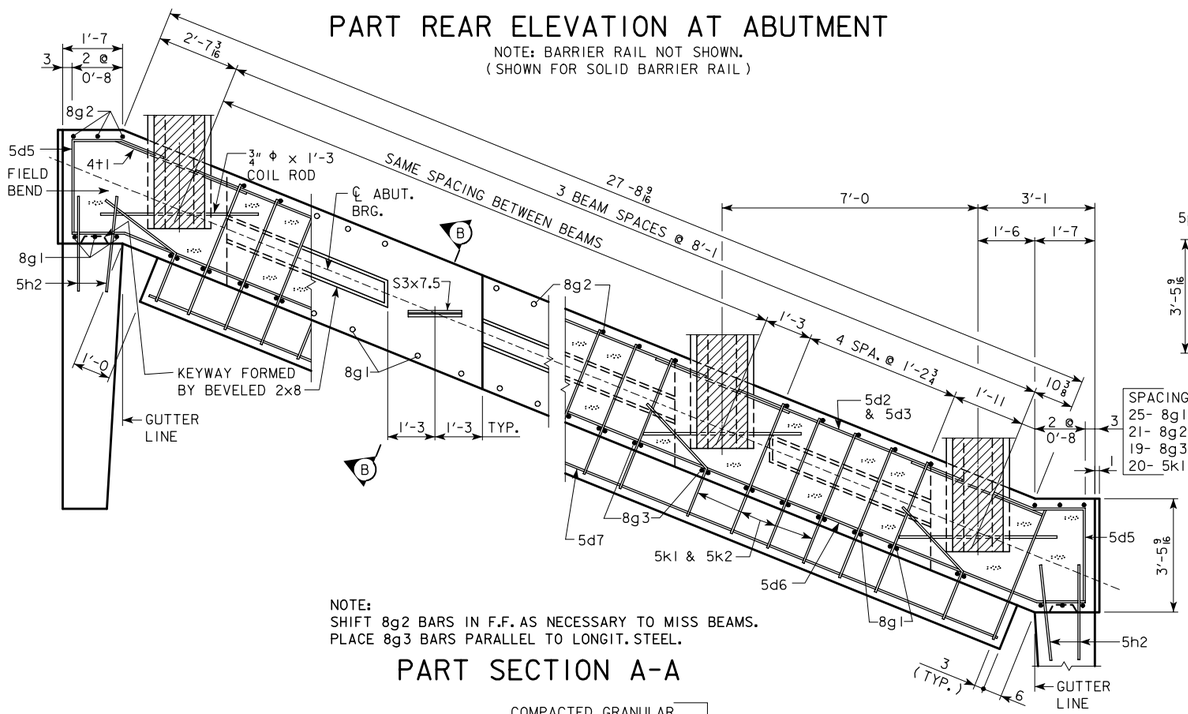

SPACING FOR:
25- 8g1 BACK FACE
21- 8g2 FRONT FACE
19- 8g3 BACK FACE
20- 5k1 & 5k2 BACK FACE

NOTE:
SHIFT 8g2 BARS IN F.F. AS NECESSARY TO MISS BEAMS.
PLACE 8g3 BARS PARALLEL TO LONGIT. STEEL.

PART SECTION A-A

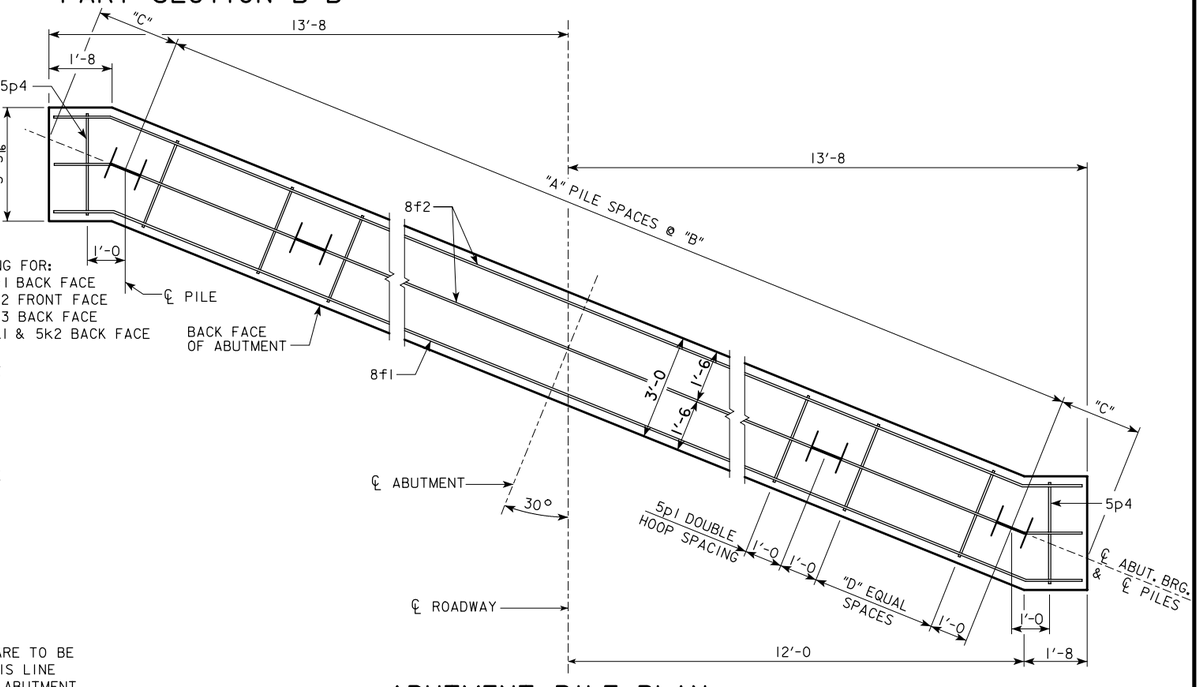

ABUTMENT PILE PLAN

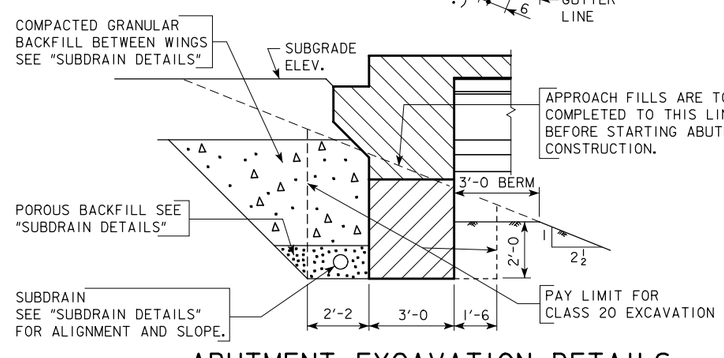

ABUTMENT EXCAVATION DETAILS

ABUTMENT NOTES:

MINIMUM CLEAR DISTANCE FROM FACE OF CONCRETE TO NEAR REINFORCING BAR IS TO BE 2" UNLESS OTHERWISE NOTED OR SHOWN.

LATEST REVISION DATE :

APPROVED BY

STANDARD DESIGN - 24' ROADWAY, SINGLE SPAN BRIDGE

PRETENSIONED PRESTRESSED CONCRETE BEAM BRIDGES

JANUARY, 2005 HS20-44 LOADING

IOWA DEPARTMENT OF TRANSPORTATION - HIGHWAY DIVISION

ABUTMENT DETAILS

30° SKEW A & B BEAMS

H24SI-15-05

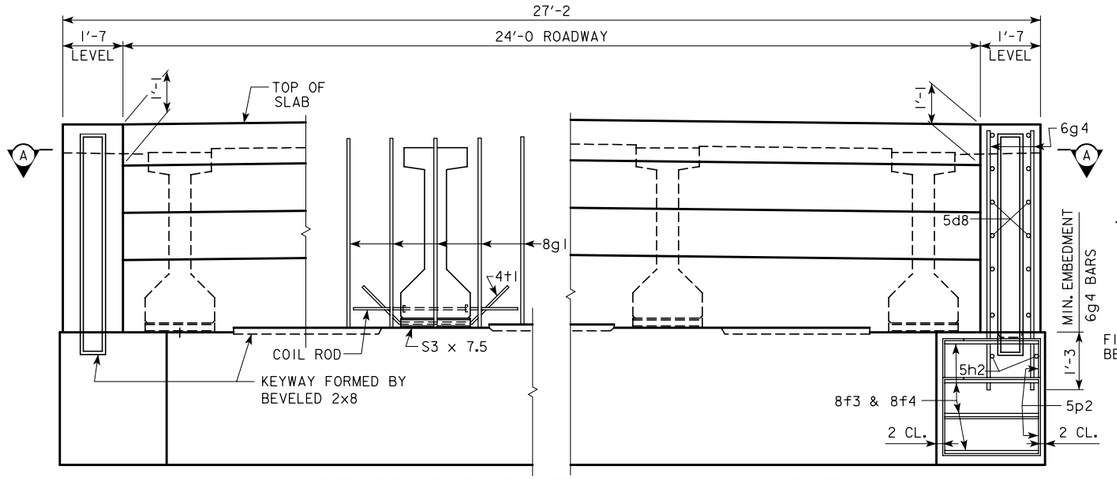

PART REAR ELEVATION AT ABUTMENT

NOTE: BARRIER RAIL AND WINGS NOT SHOWN.
(SHOWN FOR SOLID BARRIER RAIL)

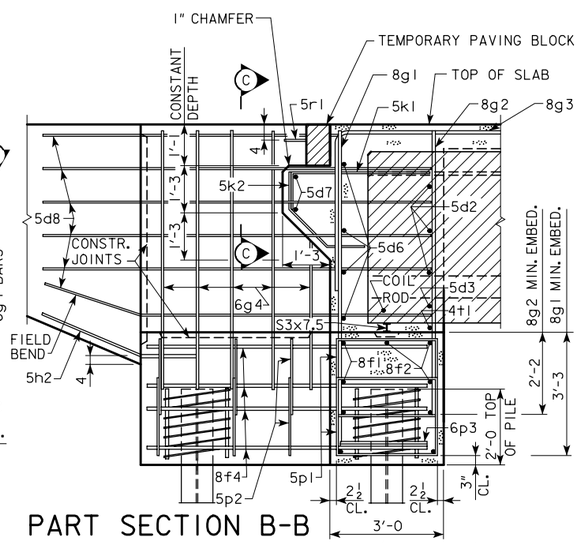

PART SECTION B-B

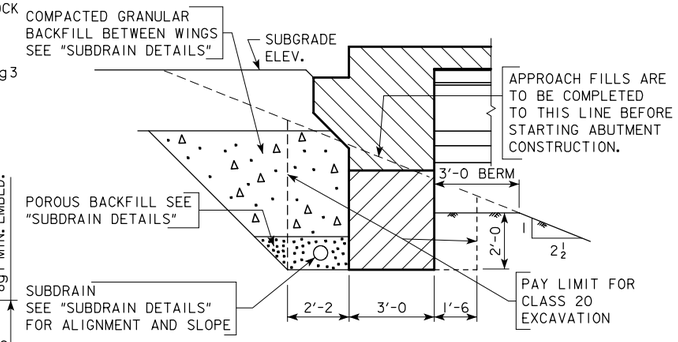

ABUTMENT EXCAVATION DETAILS

NOTE:
THE SPIRAL AT THE TOP OF EACH PILE TO BE 7 TURNS OF No. 2 BAR, 21" DIAMETER, 3" PITCH WITH 2 - $L\frac{7}{8} \times \frac{7}{8} \times \frac{1}{8}$ SPACERS PUNCHED TO HOLD SPIRAL.

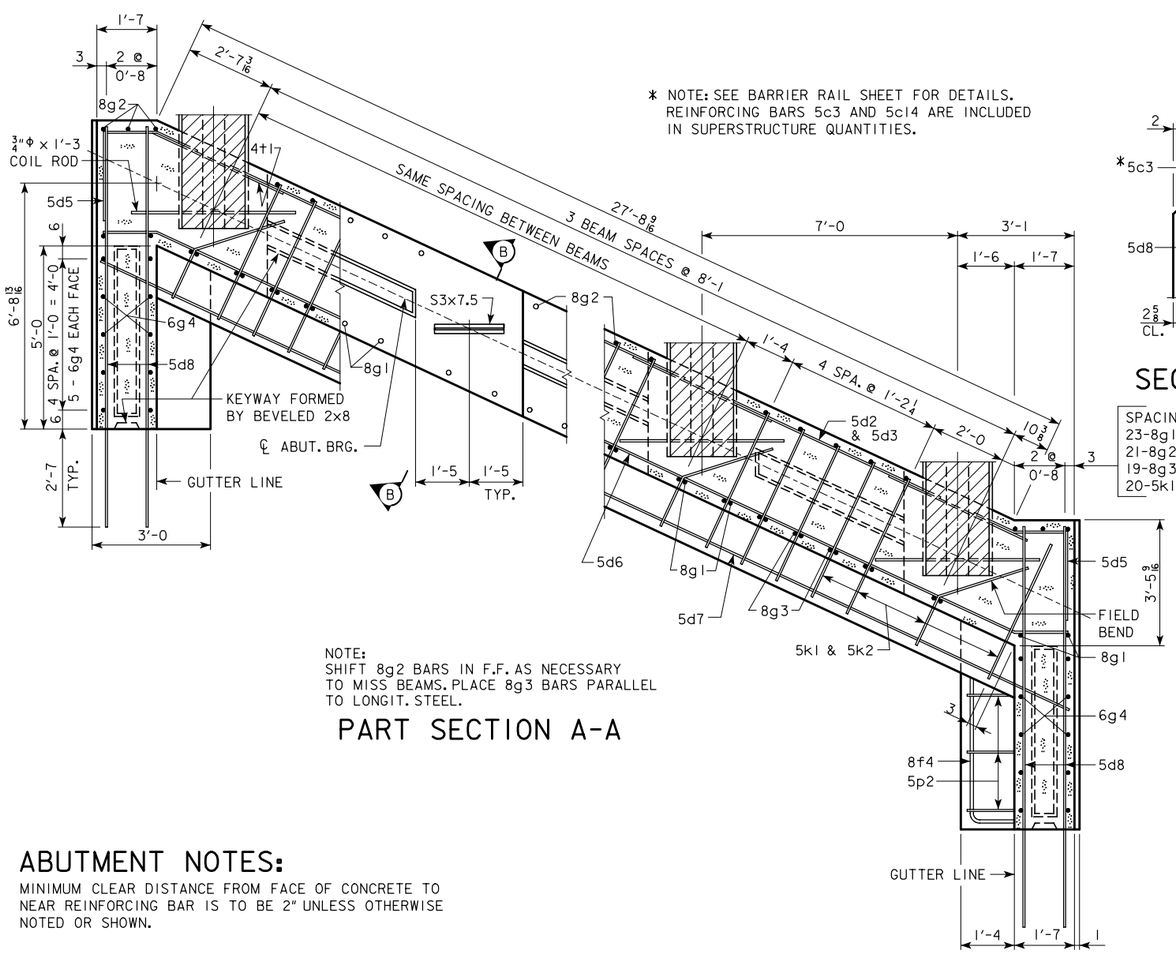

* NOTE: SEE BARRIER RAIL SHEET FOR DETAILS. REINFORCING BARS 5c3 AND 5c14 ARE INCLUDED IN SUPERSTRUCTURE QUANTITIES.

SPACING FOR:
23-8g1 BACK FACE
21-8g2 FRONT FACE
19-8g3 BACK FACE
20-5k1 & 5k2 BACK FACE

NOTE:
SHIFT 8g2 BARS IN F.F. AS NECESSARY TO MISS BEAMS. PLACE 8g3 BARS PARALLEL TO LONGIT. STEEL.

PART SECTION A-A

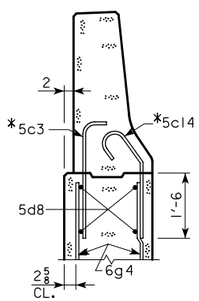

PART SECTION C-C

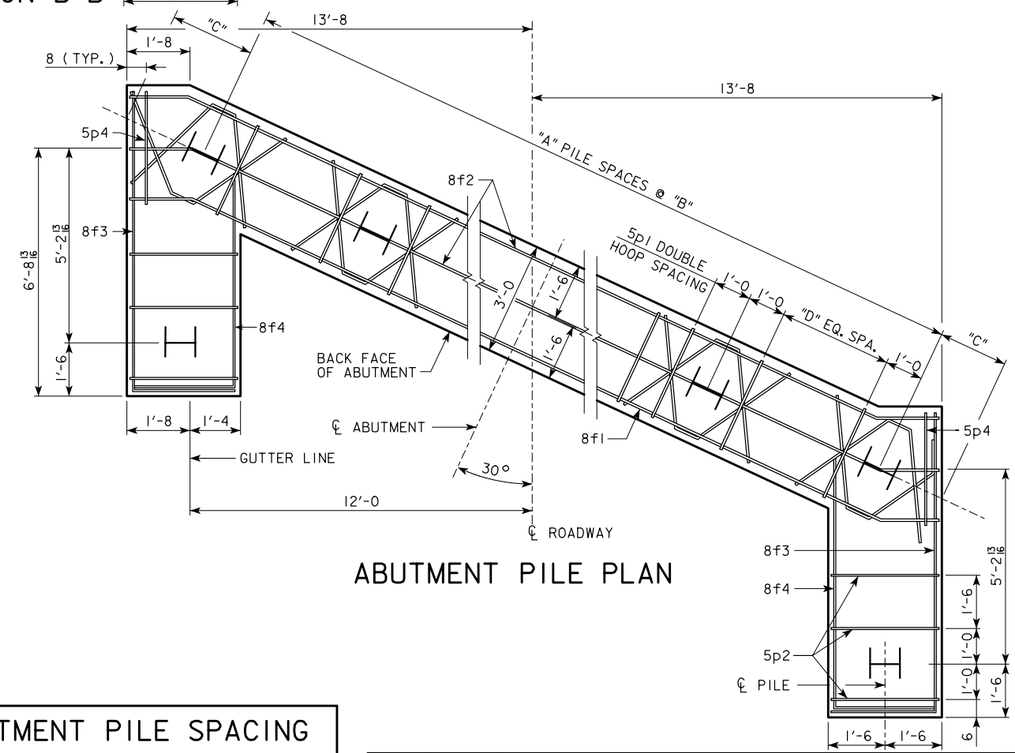

ABUTMENT PILE PLAN

ABUTMENT PILE SPACING

DIMENSION OR NO.	℄ TO ℄ ABUTMENT BEARING			
	80'-0	90'-0	100'-0	110'-0
"A" PILE SPACES	6	7	8	8
"B" (FT. - IN.)	4'-7	3'-11	3'-5	3'-5
"C" (FT. - IN.)	2'-0 3/8	2'-0 7/8	2'-1 3/8	2'-1 3/8
"D" EQUAL SPACES	3	2	2	2
NO. OF PILES PER ABUT.	9	10	11	11
DESIGN PILE LOAD (TONS)	36	36	34	36

ABUTMENT NOTES:

MINIMUM CLEAR DISTANCE FROM FACE OF CONCRETE TO NEAR REINFORCING BAR IS TO BE 2" UNLESS OTHERWISE NOTED OR SHOWN.

LATEST REVISION DATE :

APPROVED BY

STANDARD DESIGN - 24' ROADWAY, SINGLE SPAN BRIDGE

PRETENSIONED PRESTRESSED CONCRETE BEAM BRIDGES

JANUARY, 2005 HS20-44 LOADING

IOWA DEPARTMENT OF TRANSPORTATION - HIGHWAY DIVISION

ABUTMENT DETAILS

30° SKEW C & D BEAMS

H24SI-16-05

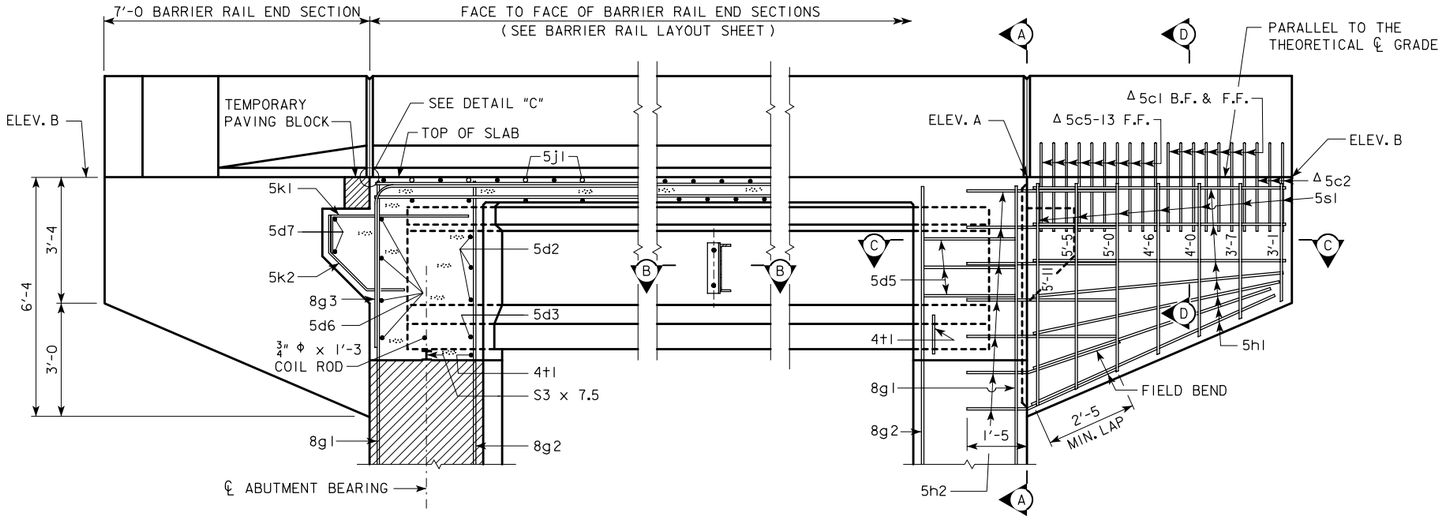

PART LONGITUDINAL SECTION NEAR GUTTER

(FOR DETAILS OF INTERMEDIATE DIAPHRAGM SEE SHEET H24SI-30-05)

PART END VIEW AT ABUTMENT

NOTE: PROVIDE ELEVATIONS A AND B IN THE BRIDGE PLAN SHEETS.

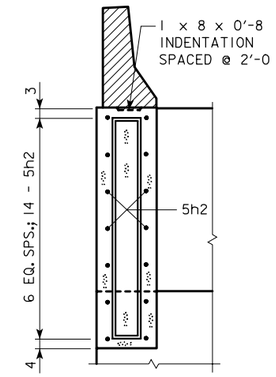

SECTION A-A

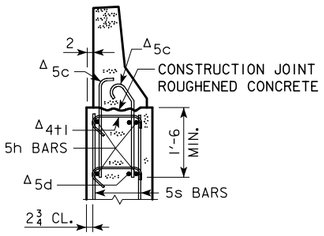

SECTION D-D

Δ NOTE:
SEE END SECTION DETAILS IN THESE PLANS FOR DETAILS OF BARRIER RAIL END SECTION AND SPACING FOR 5c BARRIER RAIL BARS. REINFORCING BARS "5c", "5d" AND "4t1" ARE INCLUDED IN THE SUPERSTRUCTURE QUANTITIES.

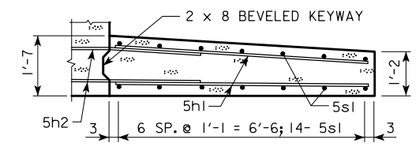

PART SECTION C-C

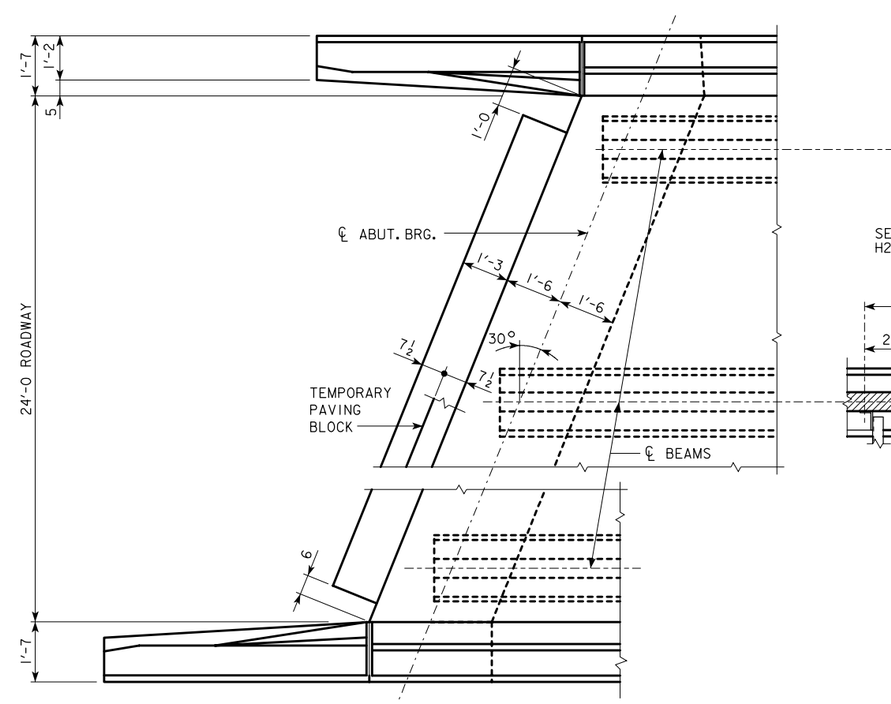

PART PLAN

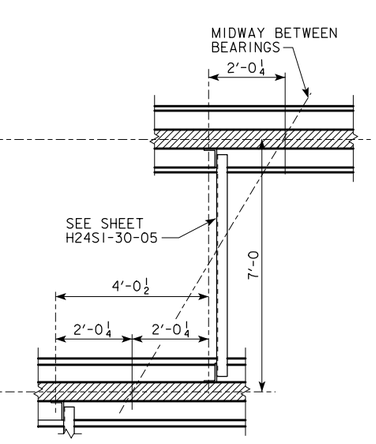

SECTION B-B

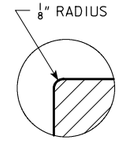

DETAIL "C"

(TEMPORARY PAVING BLOCK NOT SHOWN)

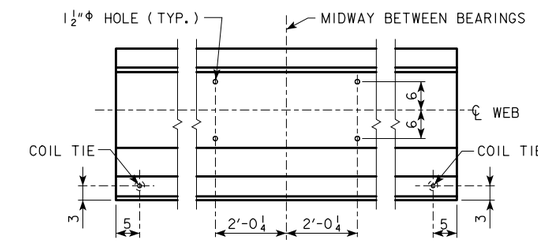

LOCATION OF BEAM COIL TIES AND STEEL DIAPHRAGM BOLT HOLES

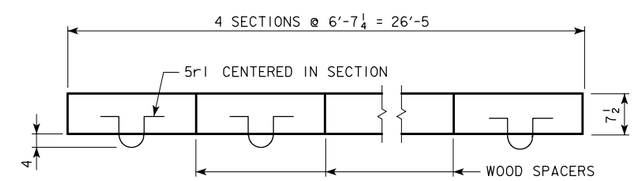

PLAN OF TEMPORARY PAVING BLOCK

NOTE: LINE PAVING NOTCH WITH TAR PAPER BEFORE PLACING THE TEMPORARY PAVING BLOCK.

LATEST REVISION DATE :

APPROVED BY

STANDARD DESIGN - 24' ROADWAY, SINGLE SPAN BRIDGE

PRETENSIONED PRESTRESSED CONCRETE BEAM BRIDGES

JANUARY, 2005 HS20-44 LOADING

IOWA DEPARTMENT OF TRANSPORTATION - HIGHWAY DIVISION

LONGITUDINAL SECTION

30° SKEW A & B BEAMS

H24SI-17-05

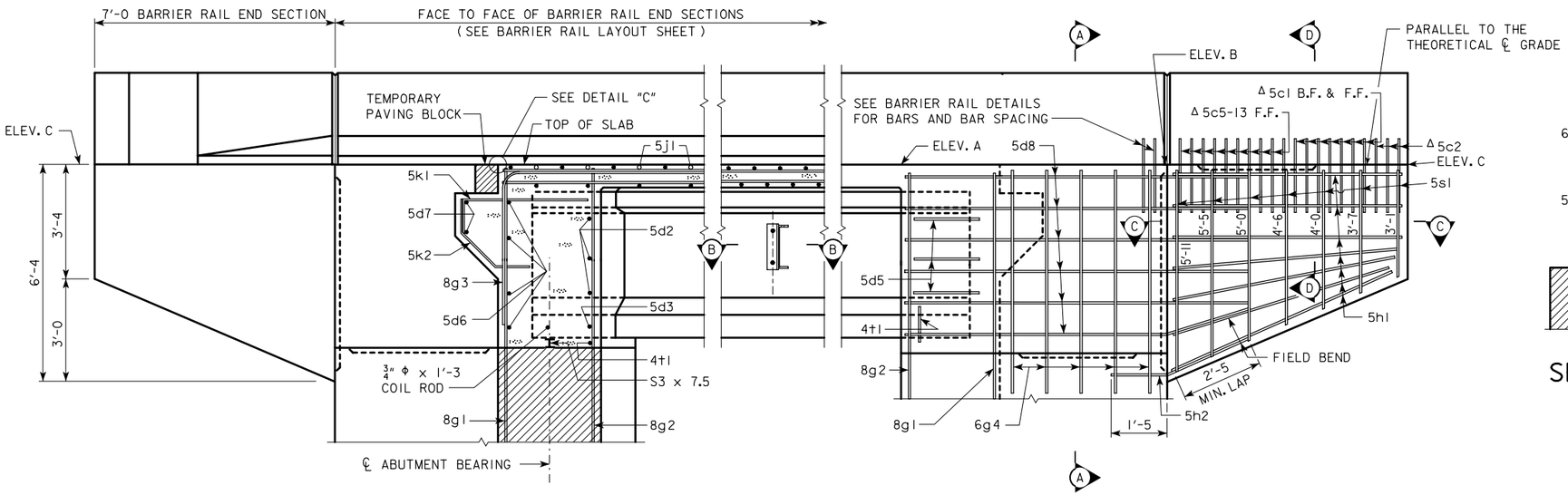

PART LONGITUDINAL SECTION NEAR GUTTER

(FOR DETAILS OF INTERMEDIATE DIAPHRAGM SEE SHEET H24SI-30-05)

PART END VIEW AT ABUTMENT

NOTE: PROVIDE ELEVATIONS A, B AND C IN THE BRIDGE PLAN SHEETS.

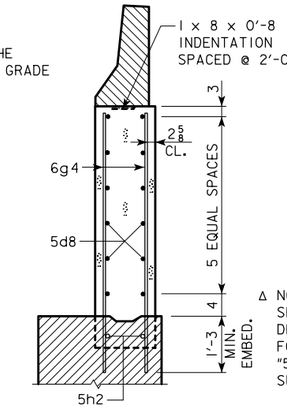

SECTION A-A

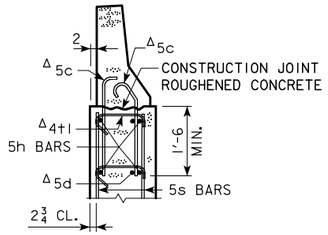

SECTION D-D

Δ NOTE:
SEE END SECTION DETAILS IN THESE PLANS FOR DETAILS OF BARRIER RAIL END SECTION AND SPACING FOR 5c BARRIER RAIL BARS. REINFORCING BARS "5c", "5d" AND "4t1" ARE INCLUDED IN THE SUPERSTRUCTURE QUANTITIES.

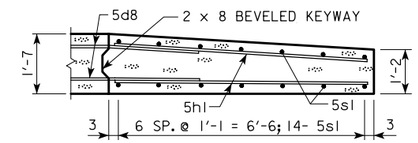

PART SECTION C-C

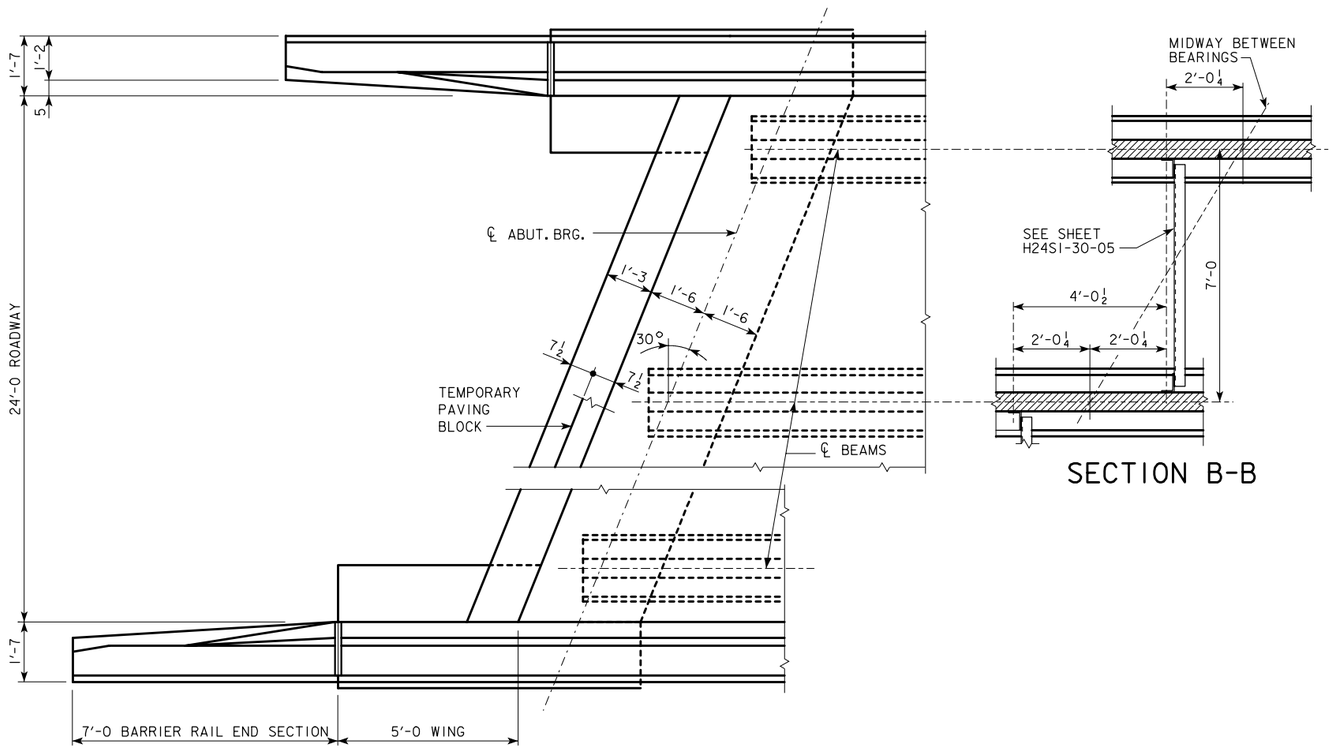

PART PLAN

SECTION B-B

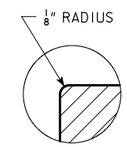

DETAIL "C"

(TEMPORARY PAVING BLOCK NOT SHOWN)

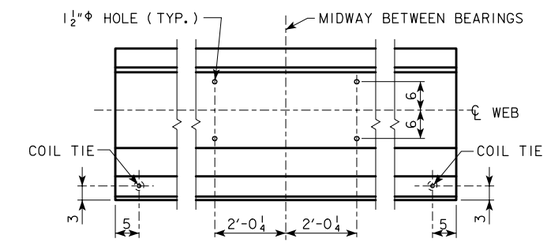

LOCATION OF BEAM COIL TIES AND STEEL DIAPHRAGM BOLT HOLES

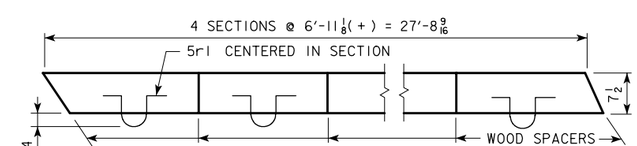

PLAN OF TEMPORARY PAVING BLOCK

NOTE: LINE PAVING NOTCH WITH TAR PAPER BEFORE PLACING THE TEMPORARY PAVING BLOCK.

LATEST REVISION DATE :

APPROVED BY

STANDARD DESIGN - 24' ROADWAY, SINGLE SPAN BRIDGE

PRETENSIONED PRESTRESSED CONCRETE BEAM BRIDGES

JANUARY, 2005 HS20-44 LOADING

IOWA DEPARTMENT OF TRANSPORTATION - HIGHWAY DIVISION

LONGITUDINAL SECTION

30° SKEW C & D BEAMS

H24SI-18-05

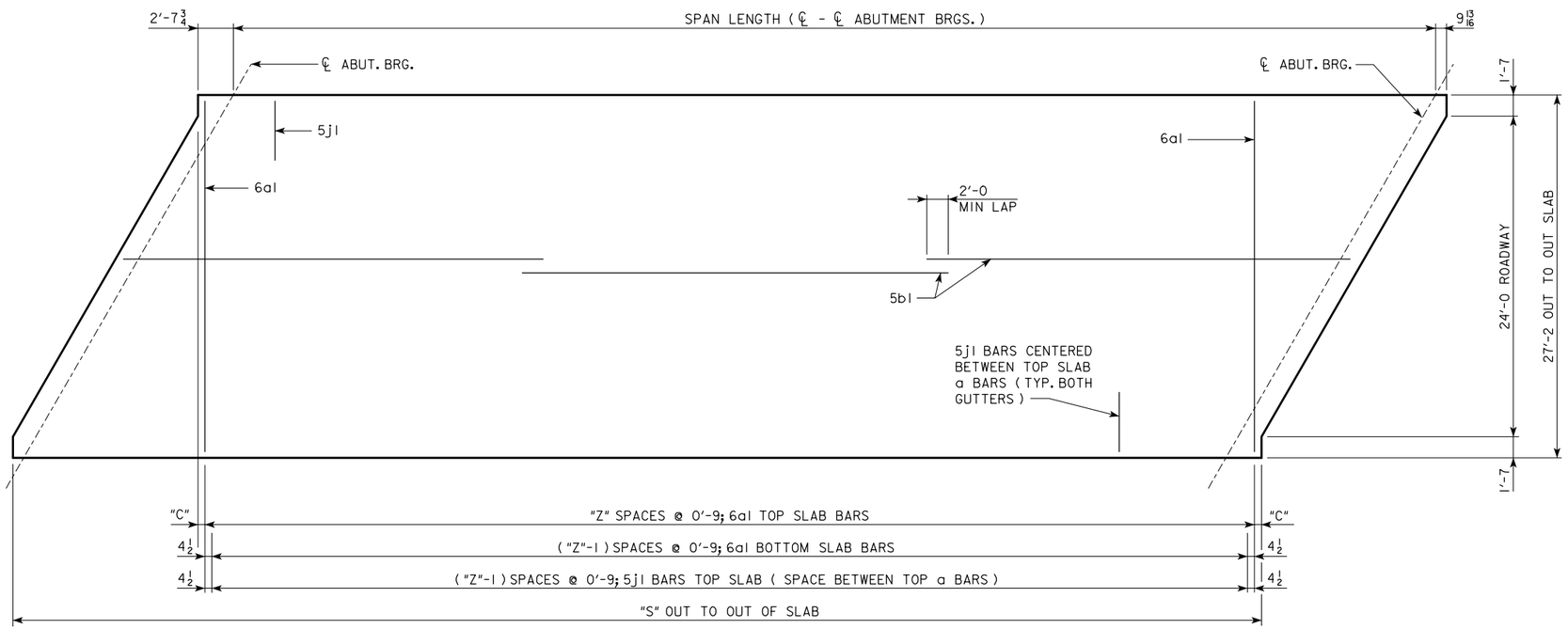

SLAB LAYOUT

(LEFT AHEAD SKEW SHOWN, RIGHT AHEAD SKEW SIMILAR)

SPAN LENGTH (℄ - ℄ ABUTMENT BRGS.)		46'-8	55'-0	67'-6	80'-0	90'-0	100'-0	110'-0
LOCATION OF EXTREME 6a1 TOP BAR FROM END OF SLAB	"C"	6 3/16	6 5/8	5 1/8	3 5/8	5 1/8	6 5/8	3 5/8
NO. OF SPACES FOR 6a1 TOP BARS	"Z"	47	58	75	92	105	118	132
OUT TO OUT OF SLAB	"S"	50'-1 9/16	58'-5 9/16	70'-11 9/16	83'-5 9/16	93'-5 9/16	103'-5 9/16	113'-5 9/16
VERTICAL CURVE TOP OF SLAB TO ABUTMENT TOP AT ℄ ABUTMENT BEARING	"U"	3'-7 11/16	3'-7 11/16	4'-2 11/16	4'-8 11/16	5'-5 5/16	5'-5 7/8	5'-5 13/16
STRAIGHT GRADE TOP OF SLAB TO ABUTMENT TOP AT ℄ ABUTMENT BEARING	"U"	3'-7 7/8	3'-7 7/8	4'-3 1/16	4'-9 1/8	5'-5 7/8	5'-6 5/8	5'-6 11/16
D.L. ABUTMENT REACTION (D.L. + F.W.S.)	KIPS	250.5	283.4	339.6	375.3	432.6	466.6	500.6
L.L. ABUTMENT REACTION (HS20-44) NO IMPACT	KIPS	115.2	119.6	124.2	127.2	129.0	130.6	131.8

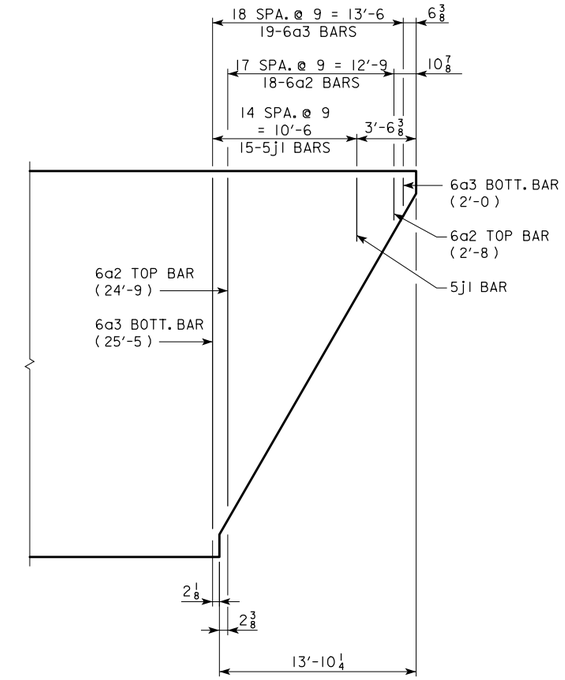

END OF SLAB REINFORCING

(TYPICAL EACH END OF DECK)

LATEST REVISION DATE :

APPROVED BY

STANDARD DESIGN - 24' ROADWAY, SINGLE SPAN BRIDGE

PRETENSIONED PRESTRESSED CONCRETE BEAM BRIDGES

JANUARY, 2005 HS20-44 LOADING

IOWA DEPARTMENT OF TRANSPORTATION - HIGHWAY DIVISION

SUPERSTRUCTURE
30° SKEW

H24SI-19-05

REINFORCING BAR LIST

ONE SUPERSTRUCTURE AND TWO ABUTMENTS

BRIDGE LENGTH

BAR	LOCATION	SHAPE	46'-8 LXA NO.	46'-8 LXA LENGTH	46'-8 LXA WEIGHT	55'-0 LXA NO.	55'-0 LXA LENGTH	55'-0 LXA WEIGHT	67'-6 LXB NO.	67'-6 LXB LENGTH	67'-6 LXB WEIGHT	80'-0 LXC NO.	80'-0 LXC LENGTH	80'-0 LXC WEIGHT	90'-0 LXD NO.	90'-0 LXD LENGTH	90'-0 LXD WEIGHT	100'-0 LXD NO.	100'-0 LXD LENGTH	100'-0 LXD WEIGHT	110'-0 LXD NO.	110'-0 LXD LENGTH	110'-0 LXD WEIGHT
6a1	SLAB TRANSVERSE, TOP & BOTTOM		95	26'-10	3829	117	26'-10	4716	151	26'-10	6086	185	26'-10	7457	211	26'-10	8505	237	26'-10	9552	265	26'-10	10,681
6a2	SLAB TRANSVERSE END, TOP		36	*	744	36	*	744	36	*	744	36	*	744	36	*	744	36	*	744	36	*	744
6a3	SLAB TRANSVERSE END, BOTTOM		38	**	785	38	**	785	38	**	785	38	**	785	38	**	785	38	**	785	38	**	785
5b1	SLAB LONGITUDINAL TOP & BOTTOM		134	25'-11	3623	134	30'-1	4205	134	36'-4	5079	201	29'-1	6098	201	32'-5	6796	201	35'-9	7495	201	39'-1	8194
5d2	ABUTMENT DIAPHRAM, LONGITUDINAL		18	7'-2	135	18	6'-11	130	18	6'-11	130	18	6'-11	130	18	7'-1	133	18	7'-1	133	18	7'-1	133
5d3	ABUTMENT DIAPHRAM, LONGITUDINAL		6	6'-3	40	6	6'-0	38	6	6'-0	38	6	6'-0	38	6	5'-10	37	6	5'-10	37	6	5'-10	37
5d5	ABUTMENT DIAPHRAGM, LONGITUDINAL - END		12	5'-0	63	12	5'-0	63	12	5'-0	63	12	5'-0	63	12	5'-0	63	12	5'-0	63	12	5'-0	63
5d6	ABUTMENT DIAPHRAGM LONGITUDINAL - B.F.		8	30'-6	255	8	30'-6	255	8	30'-6	255	8	30'-6	255	8	30'-6	255	8	30'-6	255	8	30'-6	255
5d7	PAVING NOTCH, LONGITUDINAL		4	26'-3	110	4	26'-3	110	4	26'-3	110	4	30'-11	129	4	30'-11	129	4	30'-11	129	4	30'-11	129
5d8	ABUTMENT DIAPH. WING EXT. LONGIT.		-	-	-	-	-	-	-	-	-	48	10'-6	526	48	10'-6	526	48	10'-6	526	48	10'-6	526
8f1	ABUTMENT FOOTING LONGITUDINAL - B.F.		8	30'-8	656	8	30'-8	656	8	30'-8	656	8	30'-8	656	8	30'-8	656	8	30'-8	656	8	30'-8	656
8f2	ABUTMENT FOOTING LONGITUDINAL - F.F.		10	30'-8	819	10	30'-8	819	10	30'-8	819	10	30'-8	819	10	30'-8	819	10	30'-8	819	10	30'-8	819
8f3	ABUTMENT EXTENSION LONGITUDINAL		-	-	-	-	-	-	-	-	-	16	10'-2	435	16	10'-2	435	16	10'-2	435	16	10'-2	435
8f4	ABUTMENT EXTENSION LONGITUDINAL		-	-	-	-	-	-	-	-	-	16	9'-6	406	16	9'-6	406	16	9'-6	406	16	9'-6	406
								-															
8g1	ABUTMENT VERTICAL - B.F.		50	6'-7	879	50	6'-7	879	50	7'-2	957	46	7'-8	942	46	8'-5	1034	46	8'-5	1034	46	8'-5	1034
8g2	ABUTMENT VERTICAL - F.F.		42	5'-6	617	42	5'-6	617	42	6'-1	683	42	6'-7	739	42	7'-4	823	42	7'-4	823	42	7'-4	823
8g3	ABUTMENT DIAPHRAGM VERTICAL - B.F.		38	15'-3	1548	38	15'-3	1548	38	15'-3	1548	38	15'-9	1598	38	15'-9	1598	38	15'-9	1598	38	15'-9	1598
6g4	ABUT. DIAPH. WING EXT. VERT.		-	-	-	-	-	-	-	-	-	40	5'-8	341	40	6'-5	386	40	6'-5	386	40	6'-5	386
5j1	SLAB TRANSV. TOP AT RAIL		124	6'-3	809	146	6'-3	952	180	6'-3	1174	214	6'-3	1396	240	6'-3	1565	266	6'-3	1734	294	6'-3	1917
5h1	ABUT. WING HORIZONTAL		56	6'-8	390	56	6'-8	390	56	6'-8	390	56	6'-8	390	56	6'-8	390	56	6'-8	390	56	6'-8	390
5h2	ABUTMENT TO WING ANCHOR		56	4'-0	234	56	4'-0	234	56	4'-0	234	8	4'-0	34	8	4'-0	34	8	4'-0	34	8	4'-0	34
5k1	PAVING NOTCH, TRANSVERSE		40	4'-11	206	40	4'-11	206	40	4'-11	206	40	4'-11	206	40	4'-11	206	40	4'-11	206	40	4'-11	206
5k2	PAVING NOTCH, TRANSVERSE		40	3'-5	143	40	3'-5	143	40	3'-5	143	40	3'-5	143	40	3'-5	143	40	3'-5	143	40	3'-5	143
5p1	ABUTMENT HOOPS		96	10'-6	1052	100	10'-6	1096	96	10'-6	1052	96	10'-6	1052	84	10'-6	920	96	10'-6	1052	96	10'-6	1052
5p2	ABUTMENT EXT.HOOPS		-	-	-	-	-	-	-	-	-	24	10'-8	268	24	10'-8	268	24	10'-8	268	24	10'-8	268
6p3	ABUT. BOTT. AT PILES		-	-	-	-	-	-	-	-	-	28	6'-8	281	32	6'-8	321	36	6'-8	361	36	6'-8	361
5p4	ABUTMENT HOOPS AT ENDS		8	11'-6	96	8	11'-6	96	8	11'-6	96	8	11'-6	96	8	11'-6	96	8	11'-6	96	8	11'-6	96
5r1	PAVING BLOCK LIFTING HOOPS		8	2'-10	24	8	2'-10	24	8	2'-10	24	8	2'-10	24	8	2'-10	24	8	2'-10	24	8	2'-10	24
5s1	WING, VERTICAL		56	VARIES	263	56	VARIES	263	56	VARIES	263	56	VARIES	263	56	VARIES	263	56	VARIES	263	56	VARIES	263
4t1	UNDER BEAMS AT ABUTMENTS		8	4'-11	27	8	4'-11	27	8	4'-11	27	8	4'-11	27	8	5'-1	28	8	5'-1	28	8	5'-1	28
	PILE SPIRAL - NO. 2 BAR		10	38'-6	64	12	38'-6	77	14	38'-6	90	18	38'-6	116	20	38'-6	128	22	38'-6	141	22	38'-6	141
	SPIRAL SPACER $L\frac{7}{8}\times\frac{7}{8}\times\frac{1}{8}\times$ 0.70		20	1'-10	26	24	1'-10	32	28	1'-10	37	36	1'-10	47	40	1'-10	52	44	1'-10	58	44	1'-10	58
	REINFORCING STEEL (LBS.)				17,437			19,105			21,689			26,504			28,568			30,674			32,685
	SEE BARRIER RAIL DETAILS (LBS.)				3870			4226			4784			5809			6245			6682			7160
	SEE OPEN RAIL DETAILS (LBS.)				4215			4734			5444			7095			7691			8240			8752

* VARIES FROM 2'-8 TO 24'-9 ** VARIES FROM 2'-0 TO 25'-5

CONCRETE PLACEMENT QUANTS.

(SUPERSTRUCTURE PLUS INTEGRAL ABUTMENTS)

			46'-8	55'-0	67'-6	80'-0	90'-0	100'-0	110'-0
SLAB, AND ABUT. DIAPHRAGM	WITH BARRIER RAIL	CU.YD.	58.9	64.6	76.9	94.5	107.9	115.2	122.4
	WITH OPEN RAIL	CU.YD.	60.5	66.4	79.1	97.1	110.9	118.5	126.0
PAVING BLOCKS		CU.YD.	1.3	1.3	1.3	1.4	1.4	1.4	1.4
ABUTMENT WINGS		CU.YD.	6.9	6.9	6.9	6.9	6.9	6.9	6.9
ABUTMENT FOOTINGS		CU.YD.	25.1	25.1	25.1	32.8	32.8	32.8	32.8

ESTIMATED QUANTITIES

(SUPERSTRUCTURE PLUS INTEGRAL ABUTMENTS)

			46'-8	55'-0	67'-6	80'-0	90'-0	100'-0	110'-0
NO. OF STEEL H-PILES FOR TWO ABUT. (HP10x42)		NO.	10	12	14	18	20	22	22
STRUCTURAL CONCRETE, (BRIDGE)	WITH BARRIER RAIL	CU.YD.	92.2	97.9	110.2	135.6	149.0	156.3	163.5
	WITH OPEN RAIL	CU.YD.	93.8	99.7	112.4	138.2	152.0	159.6	167.1
CONCRETE RAIL (BARRIER OR OPEN)		L.F.	128.3	144.9	169.9	214.9	234.9	254.9	274.9
REINFORCING STEEL	WITH BARRIER RAIL	LBS.	21,307	23,331	26,473	32,313	34,813	37,356	39,845
	WITH OPEN RAIL	LBS.	21,652	23,839	27,133	33,599	36,259	38,914	41,437
STRUCTURAL STEEL	WITH BARRIER RAIL	LBS.	1221	1217	1261	1301	1380	1380	1380
	WITH OPEN RAIL	LBS.	937	933	933	933	956	956	956

BENT BAR DETAILS

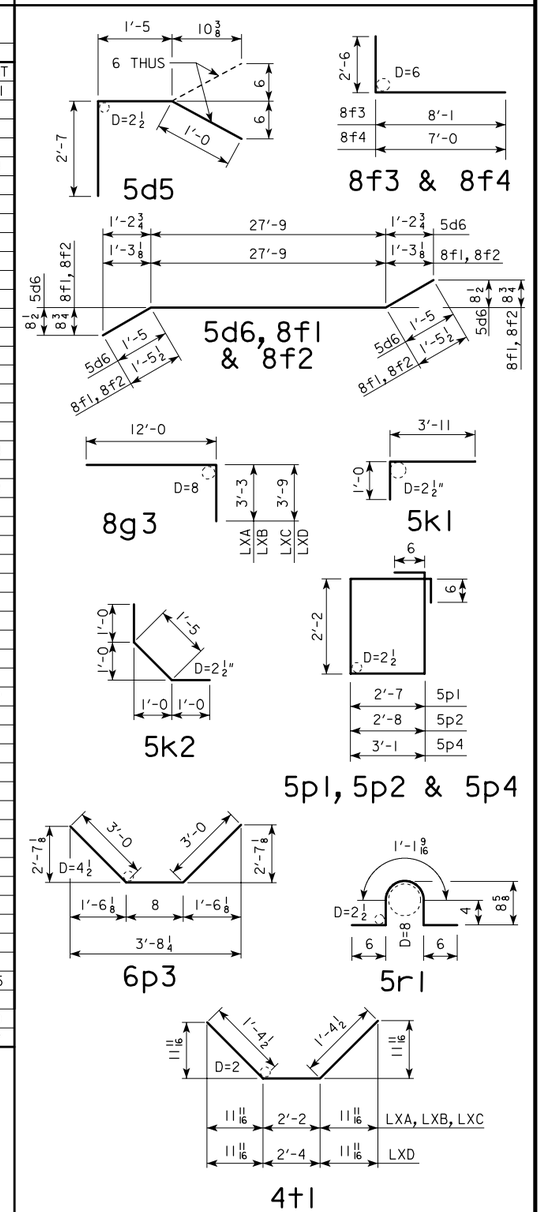

NOTE: ALL DIMENSIONS ARE OUT TO OUT. D= PIN DIAMETER

LATEST REVISION DATE :

APPROVED BY

STANDARD DESIGN - 24' ROADWAY, SINGLE SPAN BRIDGE

PRETENSIONED PRESTRESSED CONCRETE BEAM BRIDGES

JANUARY, 2005 HS20-44 LOADING

IOWA DEPARTMENT OF TRANSPORTATION - HIGHWAY DIVISION

DECK & ABUTMENT REINF. 30° SKEW

H24S1-20-05

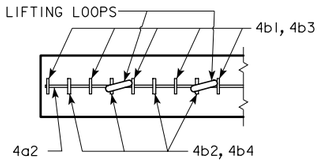

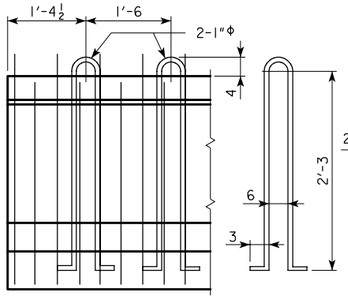

LIFTING LOOP DETAIL

ALTERNATE TYPES MAY BE SUBSTITUTED WITH THE APPROVAL OF THE ENGINEER. LIFTING LOOPS ARE TO BE STRUCTURAL GRADE.

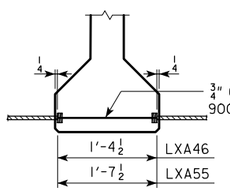

COIL TIE DETAIL

NUMBER AND EXACT LOCATION OF COIL TIES TO BE AS DETAILED ON LONGITUDINAL SECTION SHEETS

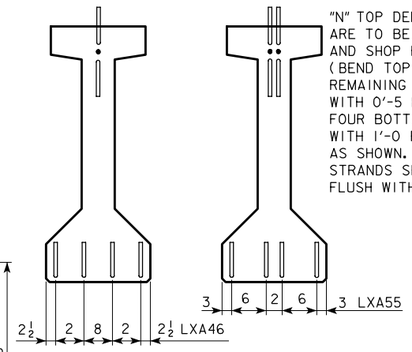

"N" TOP DEFLECTED OR STRAIGHT STRANDS ARE TO BE CUT WITH 1'-0 PROJECTIONS AND SHOP BENT UP OR DOWN AS SHOWN (BEND TOP AND BOTTOM ROWS). THE REMAINING TOP STRANDS ARE TO BE CUT WITH 0'-5 PROJECTIONS.
FOUR BOTTOM STRANDS ARE TO BE CUT WITH 1'-0 PROJECTIONS AND SHOP BENT AS SHOWN. THE REMAINING BOTTOM STRANDS SHALL BE CUT OFF REASONABLY FLUSH WITH THE CONCRETE.

BEAM	"N"
LXA46	2
LXA55	4

STRAND PROJECTION AT BEAM ENDS WHEN EMBEDDED IN CONCRETE END DIAPHRAGMS

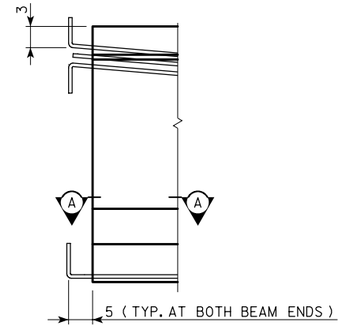

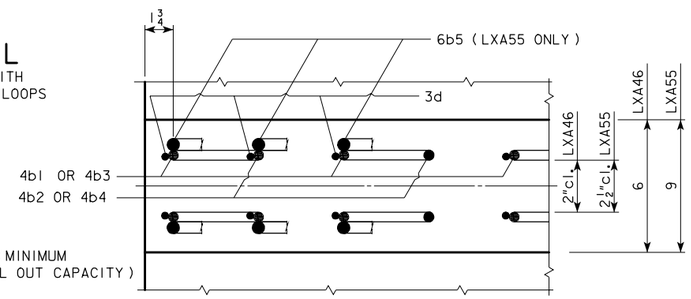

SECTION A-A SHOWING PLACEMENT OF STIRRUPS NEAR END OF BEAM

LXA BEAM DATA

BEAM	SPAN LENGTH ℄-℄ BEARING	OVERALL BEAM LENGTH (L)	STRAND SIZE	NO. OF STRANDS		TOTAL INITIAL PRESTRESS ③ KIPS	HOLD DOWN FORCE-KIPS	CAMBER (in.)		DEFLECTION (in.) Δ_D		WEIGHT (TONS)	CONCRETE (C.Y.)	REINFORCING STEEL-(lbs.)
				STRAIGHT	DEFLECTED			AT RELEASE	AFTER LOSSES	IMMEDIATE ① (ELASTIC) Δ_I	TIME ② (PLASTIC) Δ_T			
LXA46	46'-8	47'-8	½"Φ	12	3	450	10.5	0.81	1.44	0.46	0.11	7.7	3.82	449
LXA55	55'-0	56'-0	½"Φ	16	6	681.2	13.6	1.01	1.80	0.72	0.18	11.9	5.87	568

① DEFLECTIONS AT MID-SPAN DUE TO WEIGHT OF SLAB AND STEEL DIAPHRAGM.

② DEFLECTIONS DUE TO THE COMBINED EFFECT OF CREEP DUE TO WEIGHT OF SLAB AND SHRINKAGE OF SLAB.

TOTAL BEAM DEFLECTIONS AT ℄ OF SPAN, Δ_D, DUE TO WEIGHT OF SLAB AND DIAPHRAGMS FOR DETAILING PURPOSE:
$\Delta_D = \Delta_I + \Delta_T$ FOR SIMPLE SPAN.

③ TOTAL INITIAL PRESTRESS FOR LXA46 IS BASED ON 72.664% f's, AND FOR LXA55 ON 75% f's.
f's = 270 ksi AND As = 0.153 sq. in.

NOTES:

THESE BEAMS ARE DESIGNED FOR AASHTO HS20 LIVE LOADS WITH AN ALLOWANCE OF 20 lb. PER SQUARE FOOT OF ROADWAY FOR FUTURE WEARING SURFACE.

HOLD DOWN POINTS FOR DEFLECTED STRANDS MAY BE MOVED TOWARD ENDS OF BEAM A DISTANCE OF 0.05 L MAXIMUM AT PRODUCER'S OPTION.

ALL PRESTRESSING STRANDS SHALL CONFORM TO ASTM A416 GRADE 270 LOW RELAXATION STRANDS.

TOPS OF BEAMS ARE TO BE STRUCK OFF LEVEL AND FINISHED AS PER MATERIALS I.M. 570.

BEARINGS SHALL BE AS DETAILED ON OTHER DESIGN SHEETS.

THE PORTIONS OF THE PRESTRESS BEAMS THAT ARE TO BE EMBEDDED IN THE ABUTMENT SHALL BE ROUGHENED FOR A DISTANCE OF 10" FROM THE BEAM END BY SANDBLASTING OR OTHER APPROVED METHODS TO PROVIDE SUITABLE BOND BETWEEN THE BEAM AND THE DIAPHRAGM IN ACCORDANCE WITH ARTICLE 2403.14 OF THE SPECIFICATIONS.

UNLESS OTHERWISE NOTED ALL BEAMS ARE TO BE INCREASED IN LENGTH BY .0005L TO COMPENSATE FOR ELASTIC SHORTENING, CREEP AND SHRINKAGE.

HOLES MUST BE CAST IN THE WEB TO ACCOMMODATE THE STEEL DIAPHRAGM ATTACHMENTS AS DETAILED ON THE STEEL DIAPHRAGM DETAIL SHEET.

½" DIAMETER STRANDS STRESSED TO NOT MORE THAN 3,000 LBS. EACH MAY BE USED IN LIEU OF THE a BARS WHICH RUN THE FULL LENGTH OF THE BEAM IN THE TOP FLANGE.

BEAMS SHALL BE AT LEAST 28 DAYS OLD BEFORE THE SLAB IS PLACED EXCEPT AS OTHERWISE APPROVED BY THE ENGINEER.

SPECIFICATIONS:

CONSTRUCTION:
STANDARD SPECIFICATIONS OF THE IOWA DEPARTMENT OF TRANSPORTATION, CURRENT SERIES, WITH CURRENT APPLICABLE SPECIAL PROVISIONS AND SUPPLEMENTAL SPECIFICATIONS.

DESIGN: A.A.S.H.T.O., SERIES OF 1989, WITH MINOR MODIFICATIONS.

DESIGN STRESSES:

DESIGN STRESSES FOR THE FOLLOWING MATERIALS ARE TO BE IN ACCORDANCE WITH A.A.S.H.T.O. STANDARD SPECIFICATIONS FOR HIGHWAY BRIDGES, SERIES OF 1989:

REINFORCING STEEL IN ACCORDANCE WITH SECTION 8, GRADE 60.

CONCRETE IN ACCORDANCE WITH SECTION 9, f'c = 5000 psi.

PRESTRESSING STEEL IN ACCORDANCE WITH SECTION 9, f's = 270,000 psi.

REINFORCING BAR LIST

	BEAM / SPAN		LXA46 / 46'-8		LXA55 / 55'-0	
	BAR	SHAPE	NO.	LENGTH	NO.	LENGTH
	5a1		4	24'-11	4	29'-1
	4a2		2	3'-3	2	3'-3
ΔΔ	4b1		42	6'-8	-	-
	4b2		8	5'-0	-	-
ΔΔ	4b3		-	-	48	6'-8
	4b4		-	-	8	5'-0
	6b5		-	-	12	2'-9
	3c1		42	1'-3	-	-
	3c2		-	-	48	1'-4
*	3d		100	2'-8	112	2'-10
	3e		12	1'-6	14	1'-8

ΔΔ 4b1 AND 4b3 BARS TO BE EPOXY COATED.

* WHERE DEFLECTING STRANDS INTERFERE WITH PLACEMENT, SOME IN-PLACE BENDING MAY BE NECESSARY.

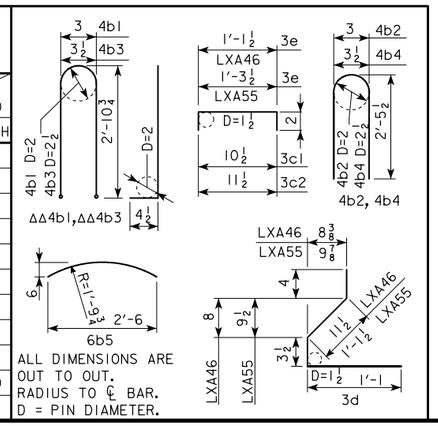

LATEST REVISION DATE :

APPROVED BY

STANDARD DESIGN - 24' ROADWAY, SINGLE SPAN BRIDGE

PRETENSIONED PRESTRESSED CONCRETE BEAM BRIDGES

JANUARY, 2005 HS20-44 LOADING

IOWA DEPARTMENT OF TRANSPORTATION - HIGHWAY DIVISION

LXA BEAM DETAILS

H24SI-21-05

NOTE: DIMENSIONS FOR THE LOCATION OF THE DEFLECTED STRANDS ARE AT ℄ BEAM AND END OF BEAM.

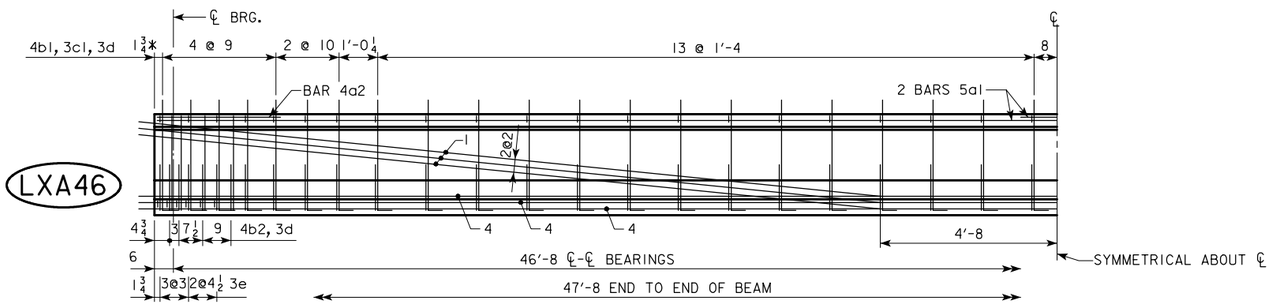

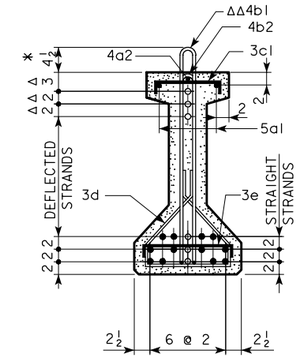

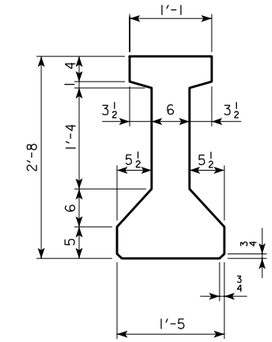

BEAM LXA46

NOTE: BARS 3d ARE TO BE PLACED IN PAIRS.

BEAM LXA46

A = 311.5 in.^{2}
Y_b = 14.05 in.
I = 34,082 in.^{4}

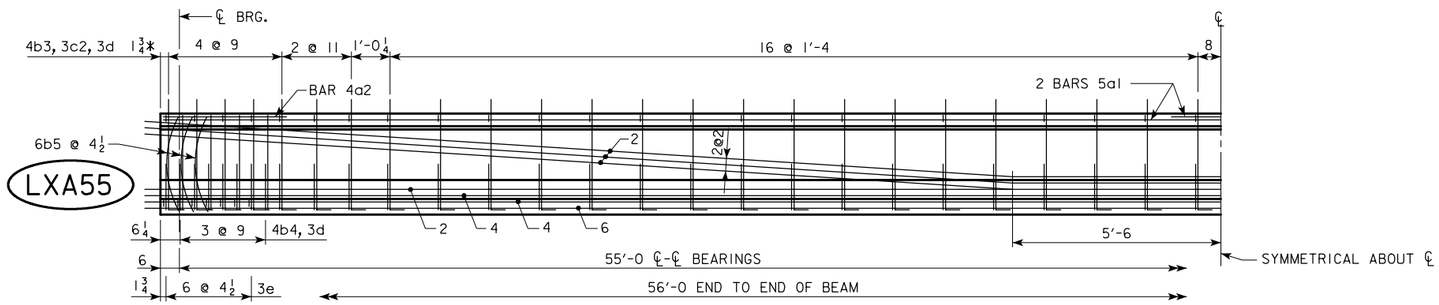

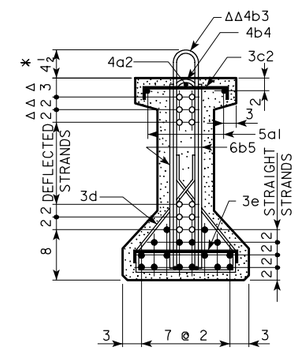

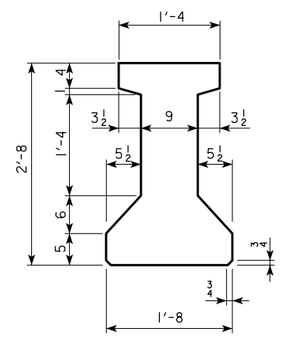

BEAM LXA55

NOTE: BARS 6b5 AND 3d ARE TO BE PLACED IN PAIRS.

BEAM LXA55

A = 407.5 in.^{2}
Y_b = 14.51 in.
I = 42,552 in.^{4}

○ DEFLECTED STRANDS
* KEEP
Δ DIMENSIONS AT END OF BEAM
ΔΔ EPOXY COATED BARS

LATEST REVISION DATE :

APPROVED BY

STANDARD DESIGN - 24' ROADWAY, SINGLE SPAN BRIDGE

PRETENSIONED PRESTRESSED CONCRETE BEAM BRIDGES

JANUARY, 2005 HS20-44 LOADING

IOWA DEPARTMENT OF TRANSPORTATION - HIGHWAY DIVISION

LXA46 - LXA55 BEAM DETAILS | H24SI-22-05

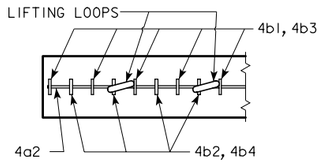

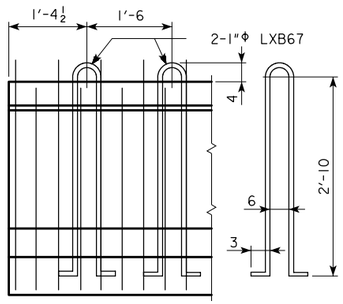

LIFTING LOOP DETAIL

ALTERNATE TYPES MAY BE SUBSTITUTED WITH THE APPROVAL OF THE ENGINEER. LIFTING LOOPS ARE TO BE STRUCTURAL GRADE.

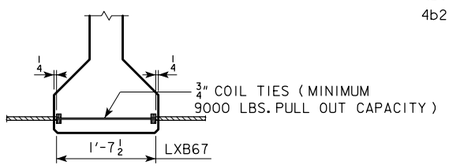

COIL TIE DETAIL

NUMBER AND EXACT LOCATION OF COIL TIES TO BE AS DETAILED ON LONGITUDINAL SECTION SHEETS.

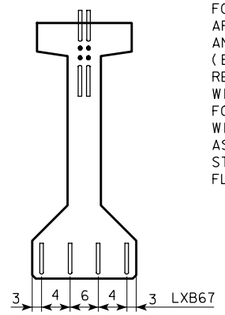

FOUR TOP DEFLECTED OR STRAIGHT STRANDS ARE TO BE CUT WITH 1'-0 PROJECTIONS AND SHOP BENT UP OR DOWN AS SHOWN (BEND TOP AND BOTTOM ROWS). THE REMAINING TOP STRANDS ARE TO BE CUT WITH 0'-5 PROJECTIONS.
FOUR BOTTOM STRANDS ARE TO BE CUT WITH 1'-0 PROJECTIONS AND SHOP BENT AS SHOWN. THE REMAINING BOTTOM STRANDS SHALL BE CUT OFF REASONABLY FLUSH WITH THE CONCRETE.

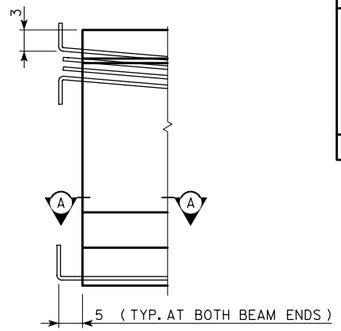

STRAND PROJECTION AT BEAM ENDS WHEN EMBEDDED IN CONCRETE END DIAPHRAGMS

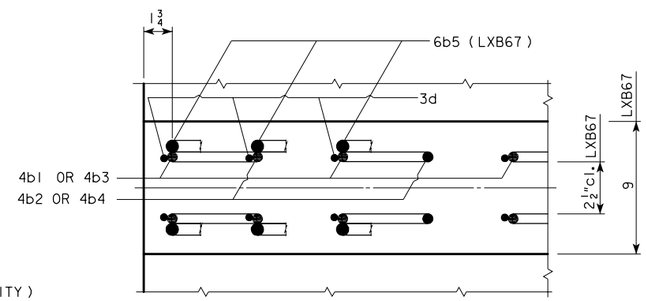

SECTION A-A SHOWING PLACEMENT OF STIRRUPS NEAR END OF BEAM

LXB BEAM DATA

BEAM	SPAN LENGTH ℄-℄ BEARING	OVERALL BEAM LENGTH (L)	STRAND SIZE	NO. OF STRANDS		TOTAL INITIAL PRESTRESS ③ KIPS	HOLD DOWN FORCE-KIPS	CAMBER (in.)		DEFLECTION (in.) Δ_D		WEIGHT (TONS)	CONCRETE (C.Y.)	REINFORCING STEEL-(lbs.)
				STRAIGHT	DEFLECTED			AT RELEASE	AFTER LOSSES	IMMEDIATE ① (ELASTIC) Δ_I	TIME ② (PLASTIC) Δ_T			
LXB67	67'-6	68'-6	½"Φ	18	8	805.1	22.6	1.23	2.17	0.89	0.23	17.8	8.80	757

① DEFLECTIONS AT MID-SPAN DUE TO WEIGHT OF SLAB AND STEEL DIAPHRAGM.

② DEFLECTIONS DUE TO THE COMBINED EFFECT OF CREEP DUE TO WEIGHT OF SLAB AND SHRINKAGE OF SLAB.

TOTAL BEAM DEFLECTIONS AT ℄ OF SPAN, Δ, DUE TO WEIGHT OF SLAB AND DIAPHRAGMS FOR DETAILING PURPOSE:
$\Delta_D = \Delta_I + \Delta_T$ FOR SIMPLE SPAN.

③ TOTAL INITIAL PRESTRESS FOR LXB67 IS BASED ON 75% f's.
f's = 270 ksi AND As = 0.153 sq. in.

NOTES:

THESE BEAMS ARE DESIGNED FOR AASHTO HS20 LIVE LOADS WITH AN ALLOWANCE OF 20 lb. PER SQUARE FOOT OF ROADWAY FOR FUTURE WEARING SURFACE.

HOLD DOWN POINTS FOR DEFLECTED STRANDS MAY BE MOVED TOWARD ENDS OF BEAM A DISTANCE OF 0.05 L MAXIMUM AT PRODUCER'S OPTION.

ALL PRESTRESSING STRANDS SHALL CONFORM TO ASTM A416 GRADE 270 LOW RELAXATION STRANDS.

TOPS OF BEAMS ARE TO BE STRUCK OFF LEVEL AND FINISHED AS PER MATERIALS I.M. 570.

BEARINGS SHALL BE AS DETAILED ON OTHER DESIGN SHEETS.

THE PORTIONS OF THE PRESTRESS BEAMS THAT ARE TO BE EMBEDDED IN THE ABUTMENT SHALL BE ROUGHENED FOR A DISTANCE OF 10" FROM THE BEAM END BY SANDBLASTING OR OTHER APPROVED METHODS TO PROVIDE SUITABLE BOND BETWEEN THE BEAM AND THE DIAPHRAGM IN ACCORDANCE WITH ARTICLE 2403.14 OF THE SPECIFICATIONS.

UNLESS OTHERWISE NOTED ALL BEAMS ARE TO BE INCREASED IN LENGTH BY .0005L TO COMPENSATE FOR ELASTIC SHORTENING, CREEP AND SHRINKAGE.

HOLES MUST BE CAST IN THE WEB TO ACCOMMODATE THE STEEL DIAPHRAGM ATTACHMENTS AS DETAILED ON THE STEEL DIAPHRAGM DETAIL SHEET.

½" DIAMETER STRANDS STRESSED TO NOT MORE THAN 3,000 LBS. EACH MAY BE USED IN LIEU OF THE a BARS WHICH RUN THE FULL LENGTH OF THE BEAM IN THE TOP FLANGE.

BEAMS SHALL BE AT LEAST 28 DAYS OLD BEFORE THE SLAB IS PLACED EXCEPT AS OTHERWISE APPROVED BY THE ENGINEER.

SPECIFICATIONS:

CONSTRUCTION:
STANDARD SPECIFICATIONS OF THE IOWA DEPARTMENT OF TRANSPORTATION, CURRENT SERIES, WITH CURRENT APPLICABLE SPECIAL PROVISIONS AND SUPPLEMENTAL SPECIFICATIONS.

DESIGN: A.A.S.H.T.O., SERIES OF 1989, WITH MINOR MODIFICATIONS.

DESIGN STRESSES:

DESIGN STRESSES FOR THE FOLLOWING MATERIALS ARE TO BE IN ACCORDANCE WITH A.A.S.H.T.O. STANDARD SPECIFICATIONS FOR HIGHWAY BRIDGES, SERIES OF 1989:

REINFORCING STEEL IN ACCORDANCE WITH SECTION 8, GRADE 60.

CONCRETE IN ACCORDANCE WITH SECTION 9, f'c = 5000 psi.

PRESTRESSING STEEL IN ACCORDANCE WITH SECTION 9, f's = 270,000 psi.

REINFORCING BAR LIST

	BEAM / SPAN		LXB67 / 67'-6	
	BAR	SHAPE	NO.	LENGTH
	6a1	—	4	35'-7
	4a2	—	2	3'-3
ΔΔ	4b1	⌒	-	-
	4b2	⌒	-	-
ΔΔ	4b3	⌒	52	7'-10
	4b4	⌒	8	6'-2
	6b5	⌒	12	3'-3
	3c1	⊓	-	-
	3c2	⊓	52	1'-6
*	3d	∠	120	3'-0
	3e	⊓	16	1'-10

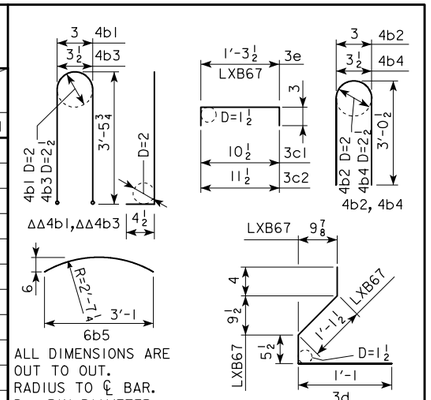

ALL DIMENSIONS ARE OUT TO OUT.
RADIUS TO ℄ BAR.
D = PIN DIAMETER.

ΔΔ 4b1 AND 4b3 BARS TO BE EPOXY COATED.

* WHERE DEFLECTING STRANDS INTERFERE WITH PLACEMENT, SOME IN-PLACE BENDING MAY BE NECESSARY.

LATEST REVISION DATE :

APPROVED BY

STANDARD DESIGN - 24' ROADWAY, SINGLE SPAN BRIDGE

PRETENSIONED PRESTRESSED CONCRETE BEAM BRIDGES

JANUARY, 2005 HS20-44 LOADING

IOWA DEPARTMENT OF TRANSPORTATION - HIGHWAY DIVISION

LXB BEAM DETAILS

H24SI-23-05

NOTE: DIMENSIONS FOR THE LOCATION OF THE DEFLECTED STRANDS ARE AT ℄ BEAM AND END OF BEAM.

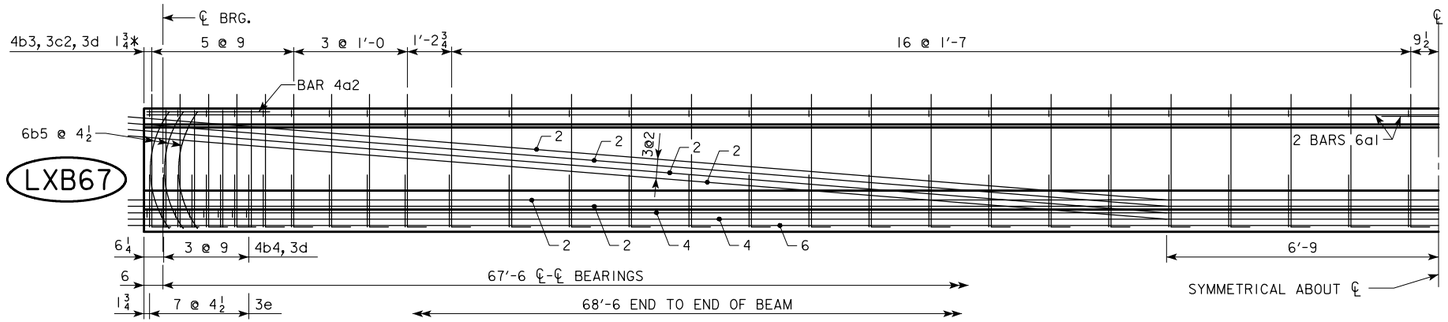

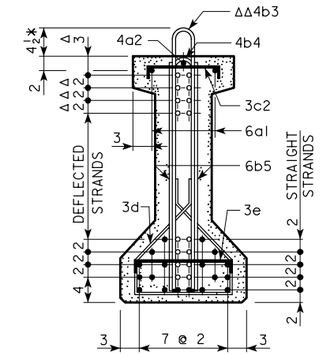

BEAM LXB67

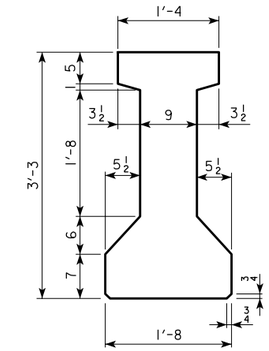

BEAM LXB67

○ DEFLECTED STRANDS
∗ KEEP
Δ DIMENSIONS AT END OF BEAM
ΔΔ EPOXY COATED BARS

A = 499.5 in.²
Y_b = 17.63 in.
I = 77,364 in.⁴

LATEST REVISION DATE :

APPROVED BY

STANDARD DESIGN - 24' ROADWAY, SINGLE SPAN BRIDGE

PRETENSIONED PRESTRESSED CONCRETE BEAM BRIDGES

JANUARY, 2005 HS20-44 LOADING

IOWA DEPARTMENT OF TRANSPORTATION - HIGHWAY DIVISION

LXB67 BEAM DETAILS H24SI-24-05

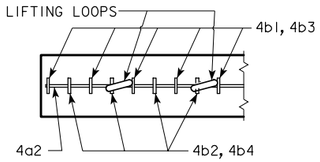

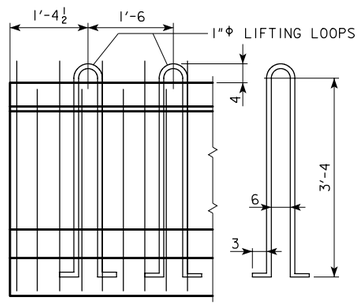

LIFTING LOOP DETAIL

ALTERNATE TYPES MAY BE SUBSTITUTED WITH THE APPROVAL OF THE ENGINEER. LIFTING LOOPS ARE TO BE STRUCTURAL GRADE.

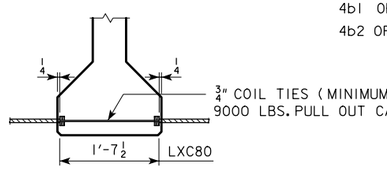

COIL TIE DETAIL

NUMBER AND EXACT LOCATION OF COIL TIES TO BE AS DETAILED ON LONGITUDINAL SECTION SHEETS.

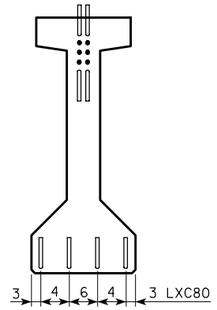

FOUR TOP DEFLECTED OR STRAIGHT STRANDS ARE TO BE CUT WITH 1'-0 PROJECTIONS AND SHOP BENT UP OR DOWN AS SHOWN (BEND TOP AND BOTTOM ROWS). THE REMAINING TOP STRANDS ARE TO BE CUT WITH 0'-5 PROJECTIONS.
FOUR BOTTOM STRANDS ARE TO BE CUT WITH 1'-0 PROJECTIONS AND SHOP BENT AS SHOWN. THE REMAINING BOTTOM STRANDS SHALL BE CUT OFF REASONABLY FLUSH WITH THE CONCRETE.

STRAND PROJECTION AT BEAM ENDS WHEN EMBEDDED IN CONCRETE END DIAPHRAGMS

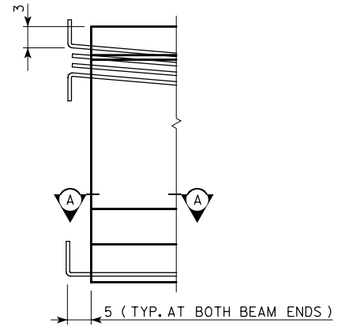

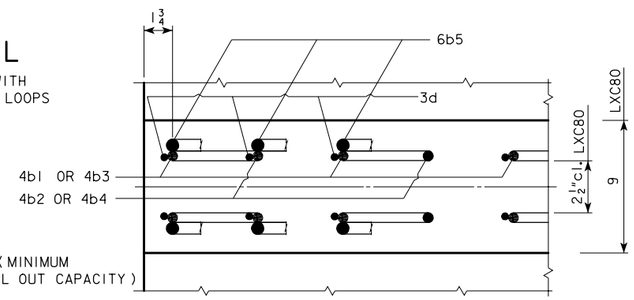

SECTION A-A SHOWING PLACEMENT OF STIRRUPS NEAR END OF BEAM

LXC BEAM DATA

BEAM	SPAN LENGTH ℄-℄ BEARING	OVERALL BEAM LENGTH (L)	STRAND SIZE	NO. OF STRANDS		TOTAL INITIAL PRESTRESS ③ KIPS	HOLD DOWN FORCE-KIPS	CAMBER (in.)		DEFLECTION (in.) Δ_D		WEIGHT (TONS)	CONCRETE (C.Y.)	REINFORCING STEEL-(lbs.)
				STRAIGHT	DEFLECTED			AT RELEASE	AFTER LOSSES	IMMEDIATE ① (ELASTIC) Δ_I	TIME ② (PLASTIC) Δ_T			
LXC80	80'-0	81'-0	½"Φ	20	10	928.9	29.4	1.46	2.58	1.15	0.29	23.8	11.76	1167

① DEFLECTIONS AT MID-SPAN DUE TO WEIGHT OF SLAB AND STEEL DIAPHRAGM.

② DEFLECTIONS DUE TO THE COMBINED EFFECT OF CREEP DUE TO WEIGHT OF SLAB AND SHRINKAGE OF SLAB.

TOTAL BEAM DEFLECTIONS AT ℄ OF SPAN, Δ_D, DUE TO WEIGHT OF SLAB AND DIAPHRAGMS FOR DETAILING PURPOSE:
$\Delta_D = \Delta_I + \Delta_T$ FOR SIMPLE SPAN.

③ TOTAL INITIAL PRESTRESS FOR LXC80 IS BASED ON 75% f's.
f's = 270 ksi AND As = 0.153 sq. in.

NOTES:

THESE BEAMS ARE DESIGNED FOR AASHTO HS20 LIVE LOADS WITH AN ALLOWANCE OF 20 lb. PER SQUARE FOOT OF ROADWAY FOR FUTURE WEARING SURFACE.

HOLD DOWN POINTS FOR DEFLECTED STRANDS MAY BE MOVED TOWARD ENDS OF BEAM A DISTANCE OF 0.05 L MAXIMUM AT PRODUCER'S OPTION.

ALL PRESTRESSING STRANDS SHALL CONFORM TO ASTM A416 GRADE 270 LOW RELAXATION STRANDS.

TOPS OF BEAMS ARE TO BE STRUCK OFF LEVEL AND FINISHED AS PER MATERIALS I.M. 570.

BEARINGS SHALL BE AS DETAILED ON OTHER DESIGN SHEETS.

THE PORTIONS OF THE PRESTRESS BEAMS THAT ARE TO BE EMBEDDED IN THE ABUTMENT SHALL BE ROUGHENED FOR A DISTANCE OF 10" FROM THE BEAM END BY SANDBLASTING OR OTHER APPROVED METHODS TO PROVIDE SUITABLE BOND BETWEEN THE BEAM AND THE DIAPHRAGM IN ACCORDANCE WITH ARTICLE 2403.14 OF THE SPECIFICATIONS.

UNLESS OTHERWISE NOTED ALL BEAMS ARE TO BE INCREASED IN LENGTH BY .0005L TO COMPENSATE FOR ELASTIC SHORTENING, CREEP AND SHRINKAGE.

HOLES MUST BE CAST IN THE WEB TO ACCOMMODATE THE STEEL DIAPHRAGM ATTACHMENTS AS DETAILED ON THE STEEL DIAPHRAGM DETAIL SHEET.

½" DIAMETER STRANDS STRESSED TO NOT MORE THAN 3,000 LBS. EACH MAY BE USED IN LIEU OF THE a BARS WHICH RUN THE FULL LENGTH OF THE BEAM IN THE TOP FLANGE.

BEAMS SHALL BE AT LEAST 28 DAYS OLD BEFORE THE SLAB IS PLACED EXCEPT AS OTHERWISE APPROVED BY THE ENGINEER.

DESIGN STRESSES:

DESIGN STRESSES FOR THE FOLLOWING MATERIALS ARE TO BE IN ACCORDANCE WITH A.A.S.H.T.O. STANDARD SPECIFICATIONS FOR HIGHWAY BRIDGES, SERIES OF 1989:

REINFORCING STEEL IN ACCORDANCE WITH SECTION 8, GRADE 60.

CONCRETE IN ACCORDANCE WITH SECTION 9, f'c = 5000 psi.

PRESTRESSING STEEL IN ACCORDANCE WITH SECTION 9, f's = 270,000 psi.

REINFORCING BAR LIST

	BEAM / SPAN		LXC80 / 80'-0	
	BAR	SHAPE	NO.	LENGTH
	6a1	—	4	41'-10
	4a2	—	2	4'-0
	8a3	—	2	40'-0
ΔΔ	4b1	⊂	-	-
	4b2	⊂	-	-
ΔΔ	4b3	⊂	60	8'-10
	4b4	⊂	10	7'-2
	6b5	⌒	16	3'-9
	3c1	⊓	-	-
	3c2	⊓	60	1'-6
*	3d	∠	140	3'-0
	3e	⊓	18	1'-10

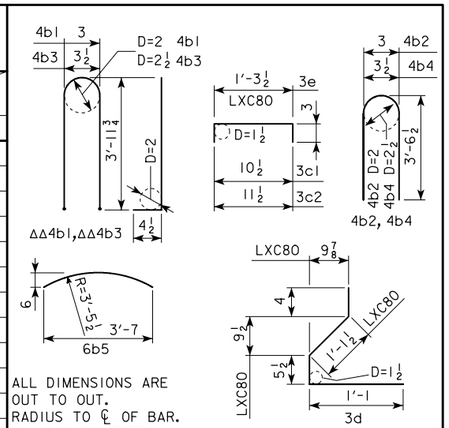

ALL DIMENSIONS ARE OUT TO OUT.
RADIUS TO ℄ OF BAR.
D = PIN DIAMETER.

ΔΔ 4b1 AND 4b3 BARS TO BE EPOXY COATED.

* WHERE DEFLECTING STRANDS INTERFERE WITH PLACEMENT, SOME IN-PLACE BENDING MAY BE NECESSARY.

LATEST REVISION DATE :

APPROVED BY

STANDARD DESIGN - 24' ROADWAY, SINGLE SPAN BRIDGE

PRETENSIONED PRESTRESSED CONCRETE BEAM BRIDGES

JANUARY, 2005 HS20-44 LOADING

IOWA DEPARTMENT OF TRANSPORTATION - HIGHWAY DIVISION

LXC BEAM DETAILS

H24SI-25-05

NOTE: DIMENSIONS FOR THE LOCATION OF THE DEFLECTED STRANDS ARE AT ℄ BEAM AND END OF BEAM.

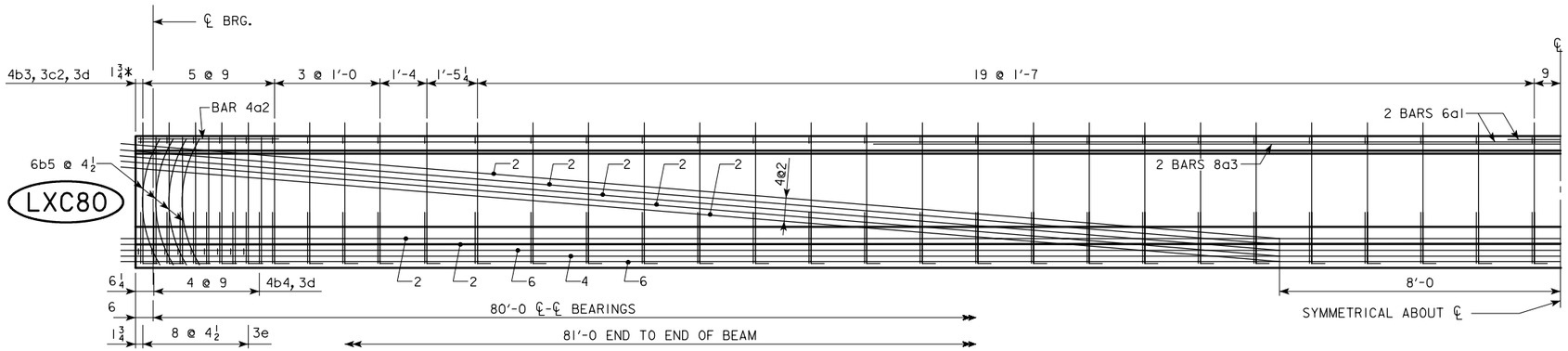

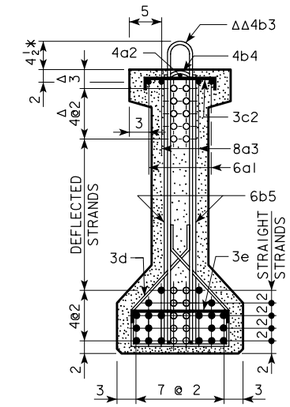

BEAM LXC80

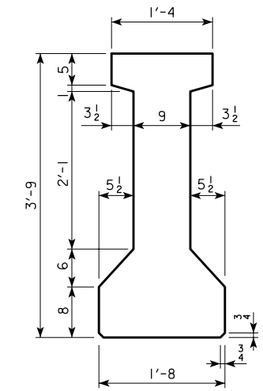

BEAM LXC80

A = 564.5 in.^{2}
Y_b = 20.23 in.
I = 116,354 in.^{4}

NOTE: BARS 6b5 AND 3d ARE TO BE PLACED IN PAIRS.

○ DEFLECTED STRANDS
* KEEP
Δ DIMENSIONS AT END OF BEAM
ΔΔ EPOXY COATED BARS

LATEST REVISION DATE :

APPROVED BY

STANDARD DESIGN - 24' ROADWAY, SINGLE SPAN BRIDGE

PRETENSIONED PRESTRESSED CONCRETE BEAM BRIDGES

JANUARY, 2005 HS20-44 LOADING

IOWA DEPARTMENT OF TRANSPORTATION - HIGHWAY DIVISION

LXC80 BEAM DETAILS H24SI-26-05

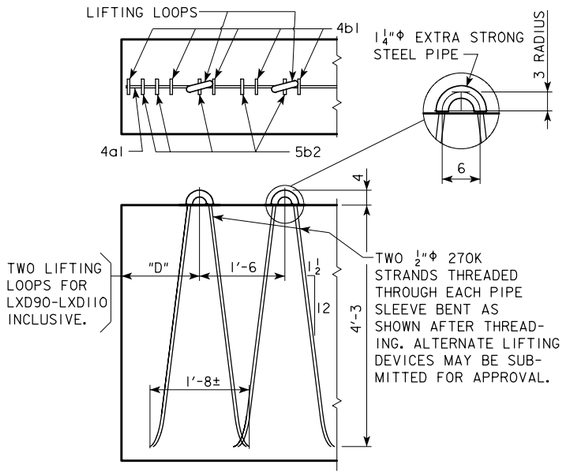

LIFTING LOOP DETAIL

"D" = 1'-3 FOR LXD90
"D" = 3'-9 FOR LXD100
"D" = 8'-2 FOR LXD110

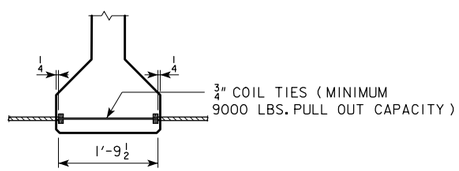

COIL TIE DETAIL

NUMBER AND EXACT LOCATION OF COIL TIES TO BE AS DETAILED ON LONGITUDINAL SECTION SHEETS.

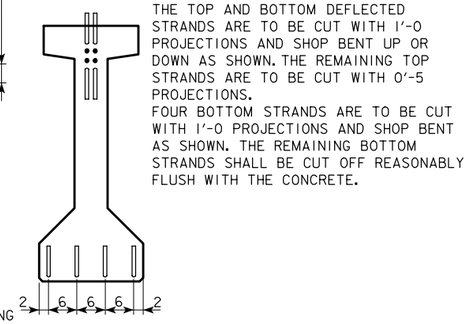

THE TOP AND BOTTOM DEFLECTED STRANDS ARE TO BE CUT WITH 1'-0 PROJECTIONS AND SHOP BENT UP OR DOWN AS SHOWN. THE REMAINING TOP STRANDS ARE TO BE CUT WITH 0'-5 PROJECTIONS.
FOUR BOTTOM STRANDS ARE TO BE CUT WITH 1'-0 PROJECTIONS AND SHOP BENT AS SHOWN. THE REMAINING BOTTOM STRANDS SHALL BE CUT OFF REASONABLY FLUSH WITH THE CONCRETE.

STRAND PROJECTION AT BEAM ENDS WHEN EMBEDDED IN CONCRETE END DIAPHRAGMS

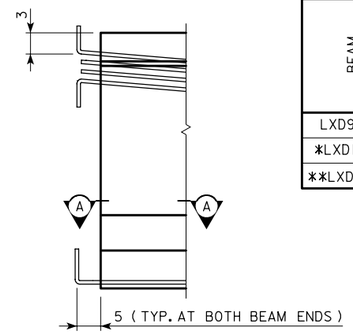

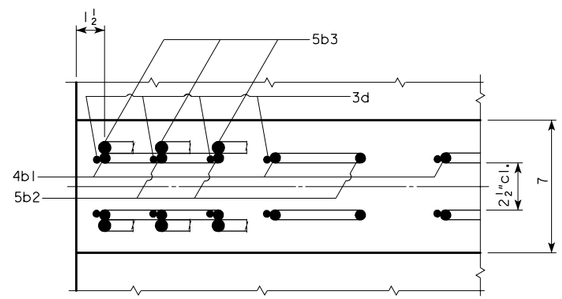

SECTION A-A SHOWING PLACEMENT OF STIRRUPS NEAR END OF BEAM

LXD BEAM DATA

BEAM	SPAN LENGTH ℄-℄ BEARING	OVERALL BEAM LENGTH (L)	STRAND SIZE	NO. OF STRANDS		TOTAL INITIAL PRESTRESS ③ KIPS	HOLD DOWN FORCE-KIPS	CAMBER (in.)		DEFLECTION (in.) Δ_D		WEIGHT (TONS)	CONCRETE (C.Y.)	REINFORCING STEEL-(lbs.)
				STRAIGHT	DEFLECTED			AT RELEASE	AFTER LOSSES	IMMEDIATE ① (ELASTIC) Δ_I	TIME ② (PLASTIC) Δ_T			
LXD90	90'-0	91'-0	1/2"Φ	20	8	867	27.7	1.24	2.17	1.02	0.25	30.4	15.0	1227
*LXD100	100'-0	101'-0	1/2"Φ	28	8	1115	24.9	1.89	3.33	1.38	0.35	33.6	16.6	1439
**LXD110	110'-0	111'-0	1/2"Φ	32	14	1424	33.7	2.30	4.03	1.86	0.46	36.9	18.2	1581

① DEFLECTIONS AT MID-SPAN DUE TO WEIGHT OF SLAB AND STEEL DIAPHRAGM.

② DEFLECTIONS DUE TO THE COMBINED EFFECT OF CREEP DUE TO WEIGHT OF SLAB AND SHRINKAGE OF SLAB.

TOTAL BEAM DEFLECTIONS AT ℄ OF SPAN, Δ, DUE TO WEIGHT OF SLAB AND DIAPHRAGMS FOR DETAILING PURPOSE:
$\Delta_D = \Delta_I + \Delta_T$ FOR SIMPLE SPAN.

③ TOTAL INITIAL PRESTRESS FOR LXD90 THRU LXD110 INCLUSIVE IS BASED ON 75% f's.
f's = 270 ksi AND As = 0.153 sq. in.

* MINIMUM CONCRETE f'c (AT 28 DAYS) SHALL BE 6000 psi. MINIMUM f'ci AT RELEASE SHALL BE 5000psi.

** MINIMUM CONCRETE f'c (AT 28 DAYS) SHALL BE 7000psi. MINIMUM f'ci AT RELEASE SHALL BE 6000psi.

NOTES:

THESE BEAMS ARE DESIGNED FOR AASHTO HS20 LIVE LOADS WITH AN ALLOWANCE OF 20 lb. PER SQUARE FOOT OF ROADWAY FOR FUTURE WEARING SURFACE.

HOLD DOWN POINTS FOR DEFLECTED STRANDS MAY BE MOVED TOWARD ENDS OF BEAM A DISTANCE OF 0.05 L MAXIMUM AT PRODUCER'S OPTION.

ALL PRESTRESSING STRANDS SHALL CONFORM TO ASTM A416 GRADE 270 LOW RELAXATION STRANDS.

TOPS OF BEAMS ARE TO BE STRUCK OFF LEVEL AND FINISHED AS PER MATERIALS I.M. 570.

BEARINGS SHALL BE AS DETAILED ON OTHER DESIGN SHEETS.

THE PORTIONS OF THE PRESTRESS BEAMS THAT ARE TO BE EMBEDDED IN THE ABUTMENT SHALL BE ROUGHENED FOR A DISTANCE OF 10" FROM THE BEAM END BY SANDBLASTING OR OTHER APPROVED METHODS TO PROVIDE SUITABLE BOND BETWEEN THE BEAM AND THE DIAPHRAGM IN ACCORDANCE WITH ARTICLE 2403.14 OF THE SPECIFICATIONS.

UNLESS OTHERWISE NOTED ALL BEAMS ARE TO BE INCREASED IN LENGTH BY .0005L TO COMPENSATE FOR ELASTIC SHORTENING, CREEP AND SHRINKAGE.

HOLES MUST BE CAST IN THE WEB TO ACCOMMODATE THE STEEL DIAPHRAGM ATTACHMENTS AS DETAILED ON THE STEEL DIAPHRAGM DETAIL SHEET.

FOR TRANSPORTING, THE OVERHANG SHALL BE IN ACCORDANCE WITH ARTICLE 2407.13 OF STD. SPEC., EXCEPT THE OVERHANG MAY BE INCREASED TO A MAXIMUM OF 9 FEET FOR THE LXD90 AND LXD100 AND 12 FEET FOR THE LXD110 BEAM.

IF BEAM CONCRETE STRENGTH f'c = 7500 psi, THEN BEAM OVERHANG MAY BE INCREASED AS FOLLOWS: 12 FEET FOR THE LXD100 AND 14 FEET FOR THE LXD110 BEAM.

THE CONTRACTOR SHALL ASSURE THE LATERAL STABILITY OF THE LXD100 AND LXD110 BEAMS DURING HANDLING, TRANSPORTING AND ERECTION BY PROVIDING TEMPORARY BRACING AS NEEDED.

1/2" DIAMETER STRANDS STRESSED TO NOT MORE THAN 3,000 LBS. EACH MAY BE USED IN LIEU OF THE a BARS WHICH RUN THE FULL LENGTH OF THE BEAM IN THE TOP FLANGE.

BEAMS SHALL BE AT LEAST 28 DAYS OLD BEFORE THE SLAB IS PLACED EXCEPT AS OTHERWISE APPROVED BY THE ENGINEER.

SPECIFICATIONS:

CONSTRUCTION:
STANDARD SPECIFICATIONS OF THE IOWA DEPARTMENT OF TRANSPORTATION, CURRENT SERIES, WITH CURRENT APPLICABLE SPECIAL PROVISIONS AND SUPPLEMENTAL SPECIFICATIONS.

DESIGN: A.A.S.H.T.O., SERIES OF 1989, WITH MINOR MODIFICATIONS.

DESIGN STRESSES:

DESIGN STRESSES FOR THE FOLLOWING MATERIALS ARE TO BE IN ACCORDANCE WITH A.A.S.H.T.O. STANDARD SPECIFICATIONS FOR HIGHWAY BRIDGES, SERIES OF 1989:

REINFORCING STEEL IN ACCORDANCE WITH SECTION 8, GRADE 60.

CONCRETE IN ACCORDANCE WITH SECTION 9, f'c = 5000 psi. (EXCEPT AS NOTED)

PRESTRESSING STEEL IN ACCORDANCE WITH SECTION 9, f's = 270,000 psi.

A/B A=SIZE B=NO.

ΔΔ 4b1 BARS TO BE EPOXY COATED.

REINFORCING BAR LIST

	BEAM / SPAN		LXD90 90'-0		LXD100 100'-0		LXD110 110'-0	
	BAR	SHAPE	NO.	LENGTH	NO.	LENGTH	NO.	LENGTH
	4a1	—	2	18'-0	2	22'-0	2	26'-6
	a2	—	5/4	30'-10	6/4	35'-4	6/4	38'-4
	a3	—	7/2	34'-0	8/2	36'-0	8/2	40'-0
ΔΔ	4b1		74	10'-4	81	10'-4	91	10'-4
	5b2		12	8'-8	12	8'-8	12	8'-8
	5b3		20	4'-4	20	4'-4	20	4'-4
	3c		74	2'-1	81	2'-1	91	2'-1
	3d		74	5'-7	81	5'-7	91	5'-7
	3e		14	2'-3	16	2'-3	16	2'-3

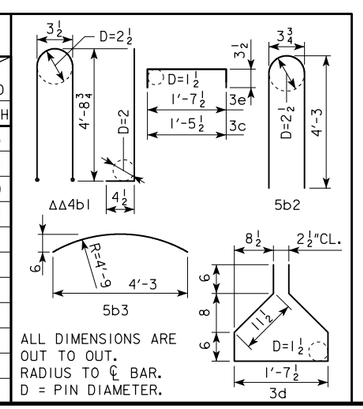

ALL DIMENSIONS ARE OUT TO OUT.
RADIUS TO ℄ BAR.
D = PIN DIAMETER.

LATEST REVISION DATE :

APPROVED BY

STANDARD DESIGN - 24' ROADWAY, SINGLE SPAN BRIDGE

PRETENSIONED PRESTRESSED CONCRETE BEAM BRIDGES

JANUARY, 2005 HS20-44 LOADING

IOWA DEPARTMENT OF TRANSPORTATION - HIGHWAY DIVISION

LXD BEAM DETAILS

H24SI-27-05

NOTE: DIMENSIONS FOR THE LOCATION OF THE DEFLECTED STRANDS ARE AT ℄ BEAM AND END OF BEAM.

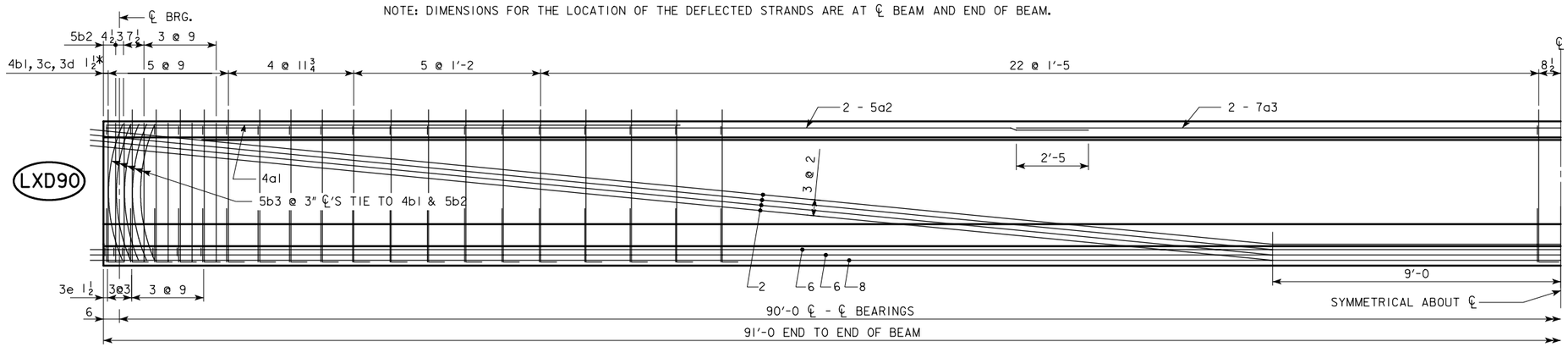

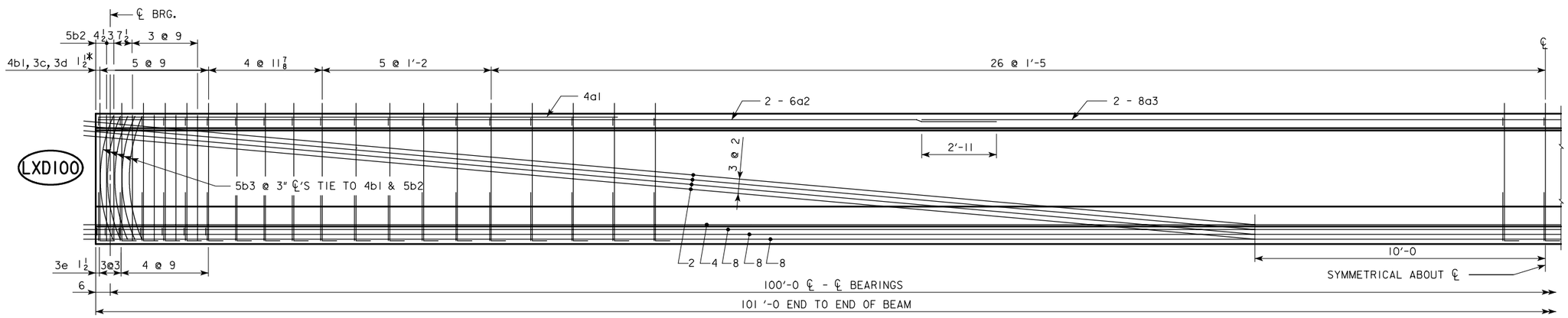

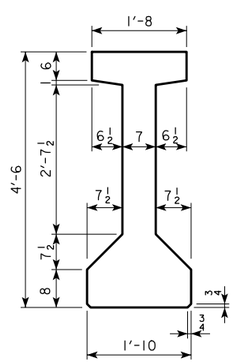

TYPICAL "LXD" BEAM CROSS SECTION

AREA = 638.75 in.^{2}
Y_b = 24.37 in.
I = 214,974 in.^{4}

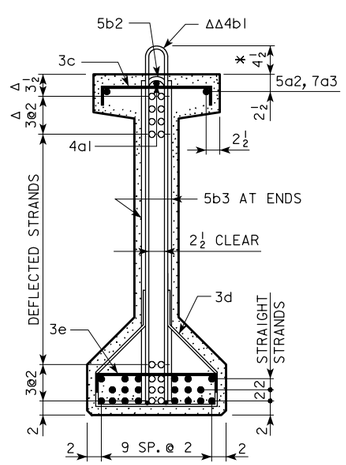

BEAM LXD90

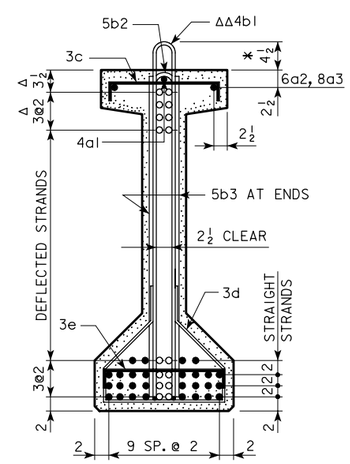

BEAM LXD100

○ DEFLECTED STRANDS
* KEEP
Δ DIMENSIONS AT END OF BEAM
ΔΔ EPOXY COATED BARS

LATEST REVISION DATE :

APPROVED BY

STANDARD DESIGN - 24' ROADWAY, SINGLE SPAN BRIDGE

PRETENSIONED PRESTRESSED CONCRETE BEAM BRIDGES

JANUARY, 2005 HS20-44 LOADING

IOWA DEPARTMENT OF TRANSPORTATION - HIGHWAY DIVISION

LXD90 & LXD100 BEAM DETAILS | H24SI-28-05

NOTE: DIMENSIONS FOR THE LOCATION OF THE DEFLECTED STRANDS ARE AT ℄ BEAM AND END OF BEAM.

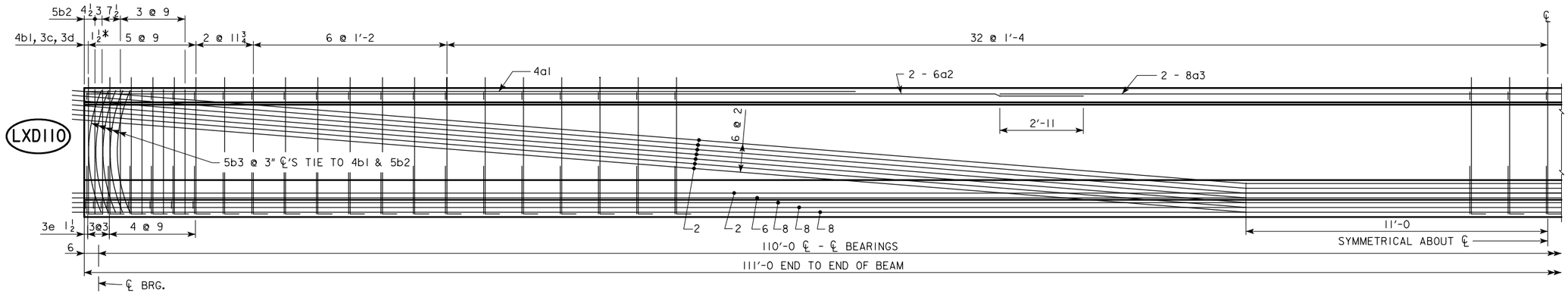

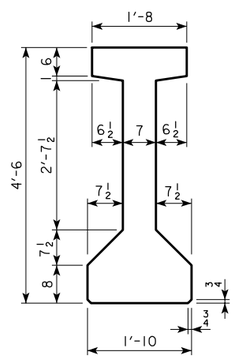

TYPICAL "LXD" BEAM CROSS SECTION

AREA = 638.75 in.^{2}
Y_b = 24.37 in.
I = 214,974 in.^{4}

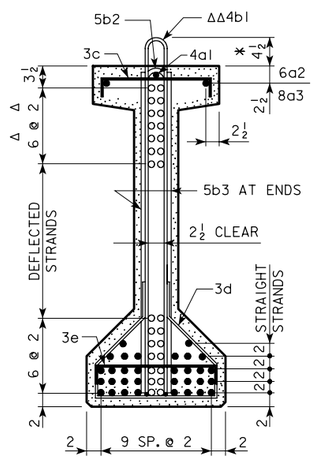

BEAM LXD110

○ DEFLECTED STRANDS
* KEEP
Δ DIMENSIONS AT END OF BEAM
ΔΔ EPOXY COATED BARS

LATEST REVISION DATE :

APPROVED BY

STANDARD DESIGN - 24' ROADWAY, SINGLE SPAN BRIDGE

PRETENSIONED PRESTRESSED CONCRETE BEAM BRIDGES

JANUARY, 2005 HS20-44 LOADING

IOWA DEPARTMENT OF TRANSPORTATION - HIGHWAY DIVISION

LXD110 BEAM DETAILS | H24SI-29-05

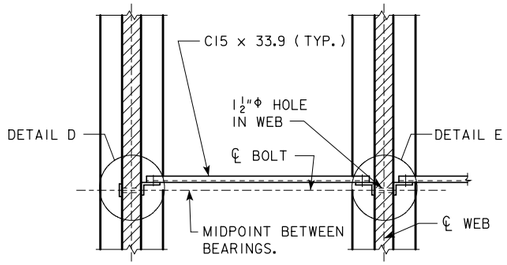

SECTION A-A
FOR 0° SKEW BRIDGES

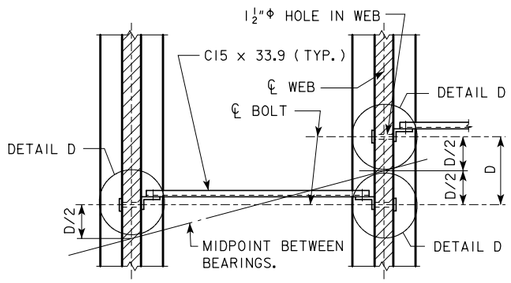

SECTION A-A
FOR 15° AND 30° SKEW BRIDGES

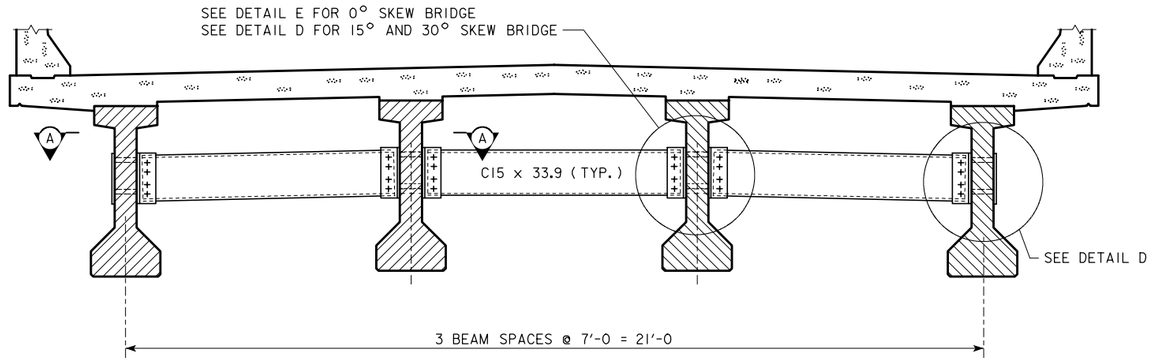

SECTION SHOWING INTERMEDIATE DIAPHRAGM

NOTES:

ALL DIAPHRAGM MATERIALS, INCLUDING BOLTS, NUTS AND WASHERS SHALL BE GALVANIZED.

SHOP DRAWINGS OF THE STEEL DIAPHRAGMS SHOWING LAYOUT AND DETAILS OF THE DIAPHRAGMS SHALL BE SUBMITTED FOR APPROVAL.

ALL COSTS FOR FURNISHING AND INSTALLING STEEL INTERMEDIATE DIAPHRAGMS SHALL BE INCLUDED IN THE PRICE BID FOR STRUCTURAL STEEL.

THE 1 1/2"Φ HOLES FOR THE 7/8"Φ H.T.S. BOLTS SHALL BE CAST INTO THE WEB. DRILLING IS NOT ALLOWED.

THE 7/8"Φ H.T.S. BOLTS THROUGH THE WEB SHALL HAVE A THREAD LENGTH OF 3" MIN. AND 4" MAX. AND SHALL MEET THE REQUIREMENTS OF ASTM A449.

ALL BOLTS ARE TO BE TIGHTENED PRIOR TO PLACING BRIDGE FLOOR CONCRETE.

INTERMEDIATE DIAPHRAGM STRUCTURAL STEEL

ONE CONNECTION DETAIL "E"

2 - 7/8"Φ x LENGTH H.T.S. BOLTS WITH NUTS AND WASHERS

WEB THICKNESS	LENGTH OF H.T.S. BOLTS	WEIGHT PER DETAIL "E"
6"	9"	4.30 LBS.
7"	10"	4.66 LBS.
9"	12"	5.34 LBS.

2 - L 6 x 4 x 1/2 x 1'-3 1/4 = 41.2 LBS.

ONE CONNECTION DETAIL "D"

2 - 7/8"Φ x LENGTH H.T.S. BOLTS WITH NUTS AND WASHERS

WEB THICKNESS	LENGTH OF H.T.S. BOLTS	WEIGHT PER DETAIL "D"
6"	9"	4.30 LBS.
7"	10"	4.66 LBS.
9"	12"	5.34 LBS.

1 - BACKING PL 4 x 3/8 x 1'-3 1/4 = 6.5 LBS.

1 - L 6 x 4 x 1/2 x 1'-3 1/4 = 20.6 LBS.

ONE C15 x 33.9 DIAPHRAGM

BEAM SPACING / WEB THICKNESS	7'-0	
	* LENGTH	UNIT WEIGHT (LBS.)
6"	6'-2 5/8	210.8
7"	6'-1 5/8	208.0
9"	5'-11 5/8	202.4

DIAPHRAGM CONNECTION BOLTS

8-7/8"Φ x 0'-2 3/4 H.T.S. BOLTS WITH NUTS AND WASHERS, PER UNIT DIAPHRAGM

10.3 LBS.

* THE LENGTH OF THE C15 x 33.9 SHOWN IN THE TABLE IS BASED ON A VARIABLE CLEARANCE OF 1 11/16 TO 2 1/16 BETWEEN THE FACE OF BEAM WEB AND END OF C15 x 33.9.

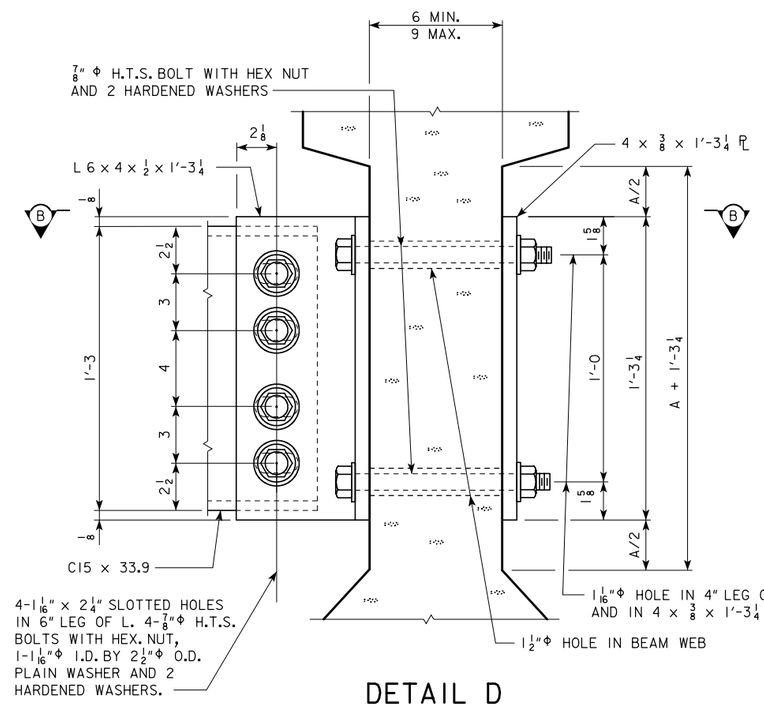

DETAIL D

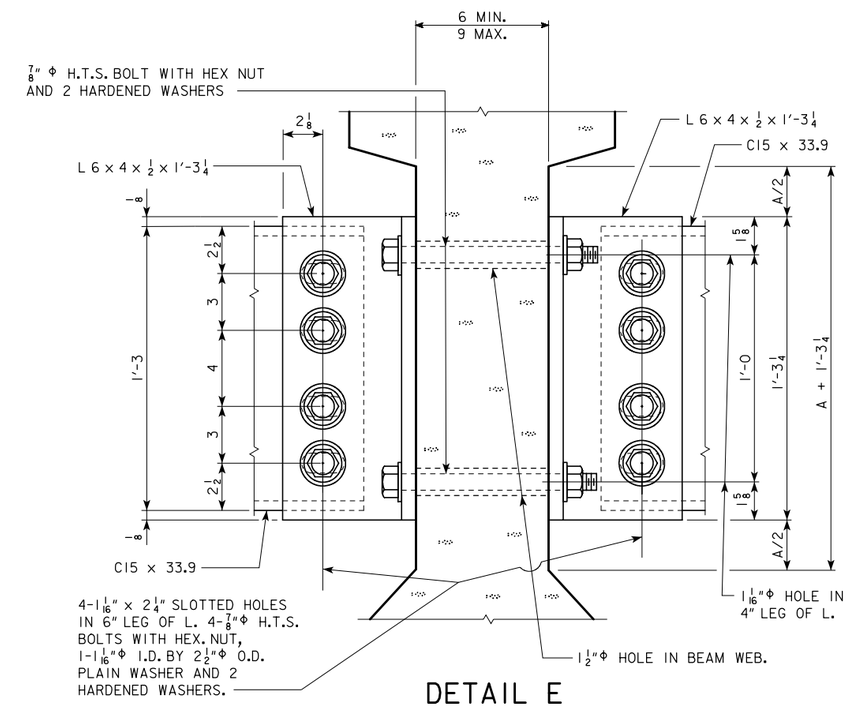

DETAIL E

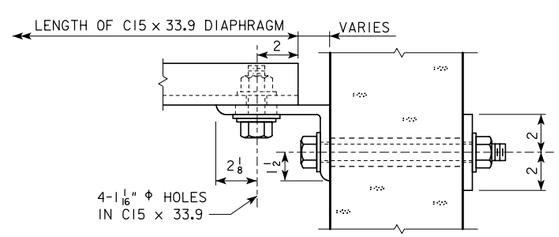

SECTION B-B

BEAM SERIES	DIMENSIONS	
	A + 1'-3 1/4	A/2
LXA	1'-4	3/8
LXB	1'-8	2 3/8
LXC	2'-1	4 7/8
LXD	2'-7 1/2	8 5/8

LATEST REVISION DATE :

APPROVED BY

STANDARD DESIGN - 24' ROADWAY, SINGLE SPAN BRIDGE

PRETENSIONED PRESTRESSED CONCRETE BEAM BRIDGES

JANUARY, 2005 HS20-44 LOADING

IOWA DEPARTMENT OF TRANSPORTATION - HIGHWAY DIVISION

INTERMEDIATE STEEL DIAPHRAGMS

H24SI-30-05

TABLE OF BARRIER RAIL DIMENSIONS AND NUMBERS

℄-℄ ABUT. BRG		46′-8			55′-0			67′-6			80′-0			90′-0			100′-0			110′-0		
SKEW		0°	15°	30°	0°	15°	30°	0°	15°	30°	0°	15°	30°	0°	15°	30°	0°	15°	30°	0°	15°	30°
DIMENSION OR NUMBER	L (FT.-IN.)	63′-8	63′-9 1/4	64′-1 9/16	72′-0	72′-1 1/4	72′-5 9/16	84′-6	84′-7 1/4	84′-11 9/16	107′-0	107′-1 1/4	107′-5 9/16	117′-0	117′-1 1/4	117′-5 9/16	127′-0	127′-1 1/4	127′-5 9/16	137′-0	137′-1 1/4	137′-5 9/16
	B (FT.-IN.)	49′-8	49′-9 1/4	50′-1 9/16	58′-0	58′-1 1/4	58′-5 9/16	70′-6	70′-7 1/4	70′-11 9/16	93′-0	93′-1 1/4	93′-5 9/16	103′-0	103′-1 1/4	103′-5 9/16	113′-0	113′-1 1/4	113′-5 9/16	123′-0	123′-1 1/4	123′-5 9/16
	S (FT.-IN.)	49′-8	49′-9 1/4	50′-1 9/16	58′-0	58′-1 1/4	58′-5 9/16	70′-6	70′-7 1/4	70′-11 9/16	83′-0	83′-1 1/4	83′-5 9/16	93′-0	93′-1 1/4	93′-5 9/16	103′-0	103′-1 1/4	103′-5 9/16	113′-0	113′-1 1/4	113′-5 9/16
	C	39	39	39	47	47	47	60	60	60	72	72	72	82	82	82	92	92	92	102	102	102
	D (FT.-IN.)	39′-0	39′-0	39′-0	47′-0	47′-0	47′-0	60′-0	60′-0	60′-0	72′-0	72′-0	72′-0	82′-0	82′-0	82′-0	92′-0	92′-0	92′-0	102′-0	102′-0	102′-0
	E	40	40	40	48	48	48	61	61	61	73	73	73	83	83	83	93	93	93	103	103	103
	F (FT.-IN.)	0′-0	0′-0	0′-0	0′-0	0′-0	0′-0	0′-0	0′-0	0′-0	5′-0	5′-0	5′-0	5′-0	5′-0	5′-0	5′-0	5′-0	5′-0	5′-0	5′-0	5′-0
	W (FT.-IN.)	4′-10	4′-10 5/8	5′-0 13/16	5′-0	5′-0 5/8	5′-2 13/16	4′-9	4′-9 5/8	4′-11 13/16	5′-0	5′-0 5/8	5′-2 13/16	5′-0	5′-0 5/8	5′-2 13/16	5′-0	5′-0 5/8	5′-2 13/16	5′-0	5′-0 5/8	5′-2 13/16
	a	0	0	0	0	0	0	0	0	0	5	5	5	5	5	5	5	5	5	5	5	5

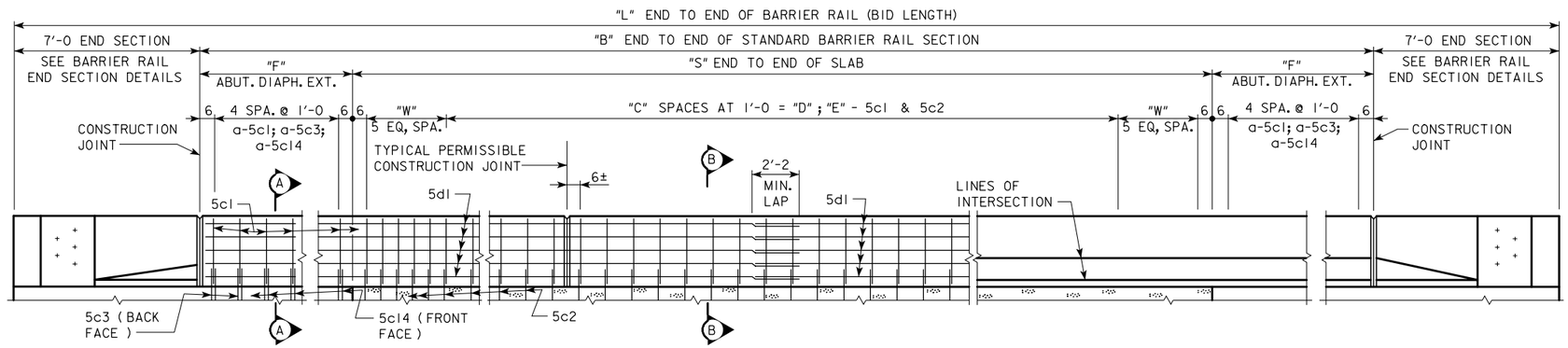

ELEVATION OF BARRIER RAIL LAYOUT

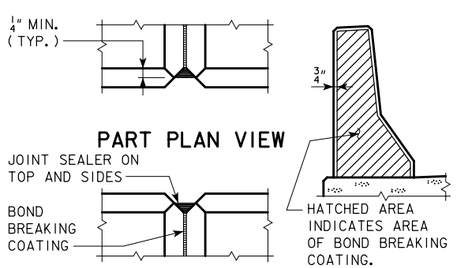

PART PLAN VIEW

PART ELEVATION VIEW

BARRIER RAIL JOINT DETAILS

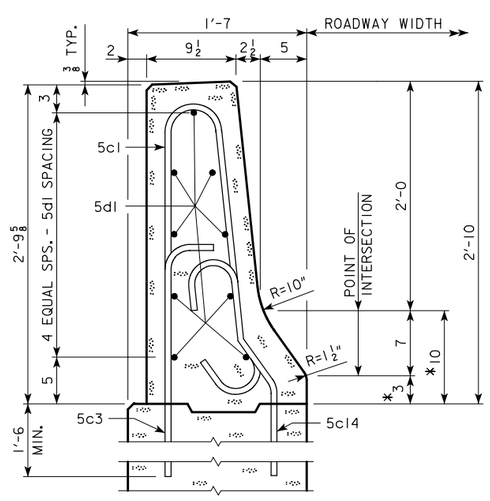

PART SECTION A-A

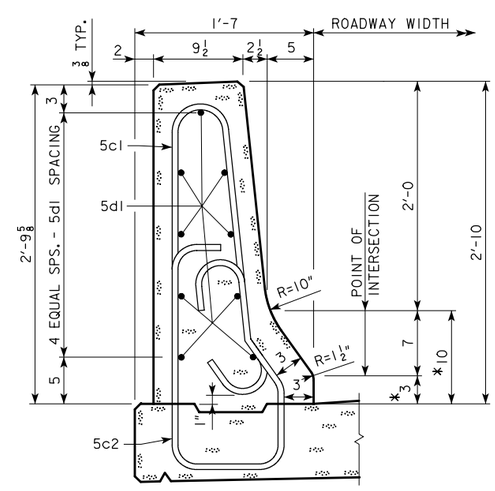

PART SECTION B-B

*DENOTES THE MAXIMUM VALUE FOR THIS DIMENSION. THIS DIMENSION MAY VARY DUE TO CONSTRUCTION INACCURACIES.

BARRIER RAIL NOTES:

MINIMUM CLEAR DISTANCE FROM FACE OF CONCRETE TO NEAR REINFORCING BAR IS TO BE 2" UNLESS OTHERWISE NOTED OR SHOWN.

THE PERMISSIBLE CONSTRUCTION JOINTS ARE TO BE PLACED BETWEEN VERTICAL BARS AT A MINIMUM SPACING OF 20 FEET. CONSTRUCTION JOINT CONTACT SURFACES ARE TO BE COATED WITH AN APPROVED BOND BREAKER.

COST OF THE JOINT SEALER AND BOND BREAKER SHALL BE CONSIDERED INCIDENTAL TO OTHER CONSTRUCTION.

THE CONCRETE BARRIER RAIL IS TO BE BID ON A LINEAL FOOT BASIS. THE NUMBER OF LINEAL FEET OF BARRIER RAIL INSTALLED WILL BE PAID FOR AT THE CONTRACT PRICE PER LINEAL FOOT BASED ON PLAN QUANTITIES. PRICE BID FOR CONCRETE BARRIER RAILING SHALL BE FULL COMPENSATION FOR FURNISHING ALL MATERIAL, EXCLUDING REINFORCING STEEL, AND ALL OF THE EQUIPMENT AND LABOR REQUIRED TO ERECT THE RAIL IN ACCORDANCE WITH THESE PLANS AND CURRENT SPECIFICATIONS. IF CONDUIT IS REQUIRED IN THIS PLAN THE RIGID STEEL CONDUIT, JUNCTION BOXES AND FITTINGS INCLUDING LABOR AND ANY ADDITIONAL WORK TO DO THE INSTALLATION IS CONSIDERED INCIDENTAL TO THE COST OF THE RAILING.

ALL BARRIER RAIL REINFORCING STEEL IS TO BE INCLUDED WITH THE SUPERSTRUCTURE REINFORCING STEEL.

THE JOINT SEALER SHALL BE LIGHT GRAY NONSAG LATEX CAULKING SEALER MARKETED FOR OUTDOOR USE. NO TESTING OR CERTIFICATION IS REQUIRED.

TOP OF THE BARRIER RAIL IS TO BE PARALLEL TO THE THEORETICAL ℄ GRADE.

CROSS SECTIONAL AREA OF THE STANDARD SECTION OF THE BARRIER RAIL = 2.84 SQUARE FEET.

CONCRETE BARRIER RAILS PLACED USING THE SLIPFORM METHOD WILL REQUIRE THE USE OF A CLASS BR CONCRETE IN ACCORDANCE WITH ARTICLE 2513.03B OF THE STANDARD SPECIFICATION. CLASS D CONCRETE IS NOT PERMITTED FOR CONCRETE BARRIER RAILS PLACED USING THE SLIPFORM METHOD.

LATEST REVISION DATE :

APPROVED BY

STANDARD DESIGN - 24′ ROADWAY, SINGLE SPAN BRIDGE

PRETENSIONED PRESTRESSED CONCRETE BEAM BRIDGES

JANUARY, 2005 HS20-44 LOADING

IOWA DEPARTMENT OF TRANSPORTATION - HIGHWAY DIVISION

BARRIER RAIL DETAILS
SHEET 1 OF 3

H24S1-31-05

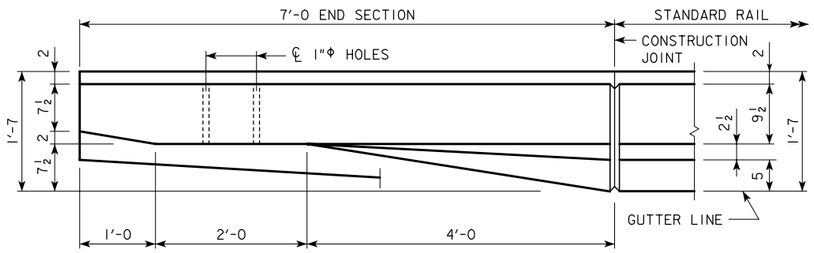

PART PLAN VIEW

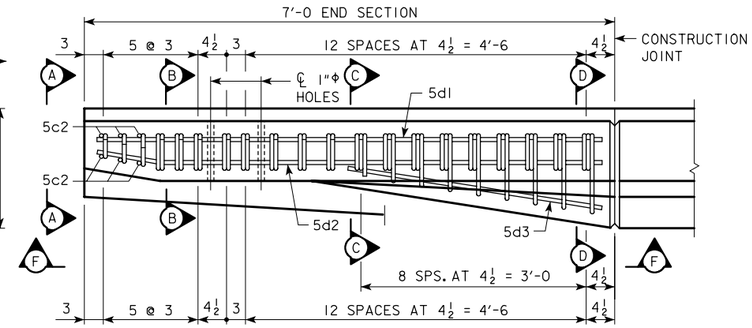

PART VIEW E-E

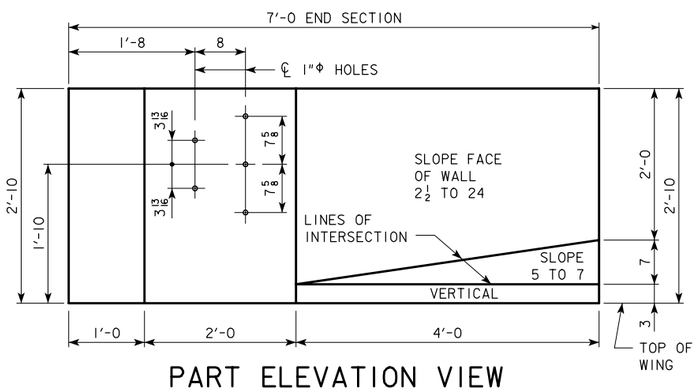

PART ELEVATION VIEW

PROVIDE 5 HOLES FORMED WITH 1"Φ PLASTIC CONDUIT. COST TO BE INCLUDED IN PRICE BID FOR CONCRETE BARRIER RAILING.

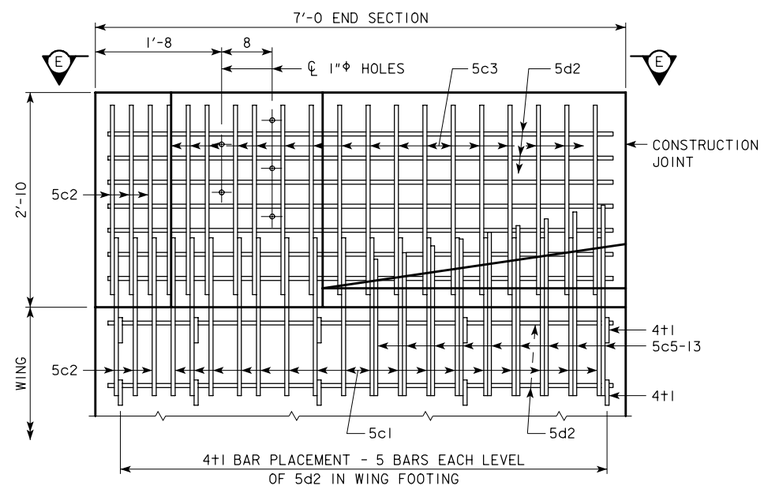

PART VIEW F-F

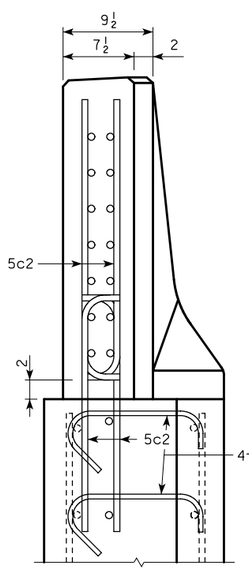

VIEW A-A

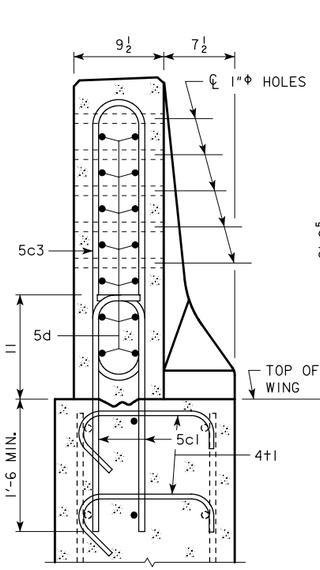

SECTION B-B

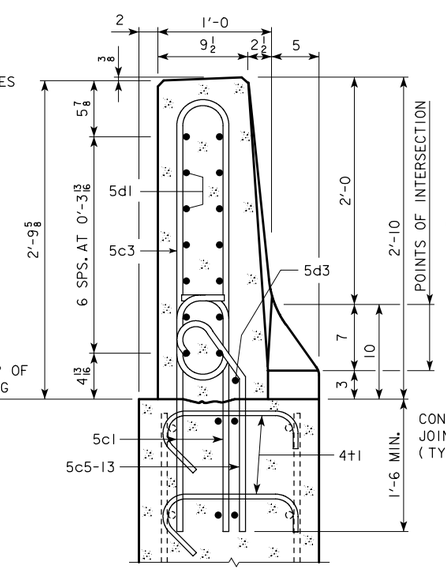

SECTION C-C

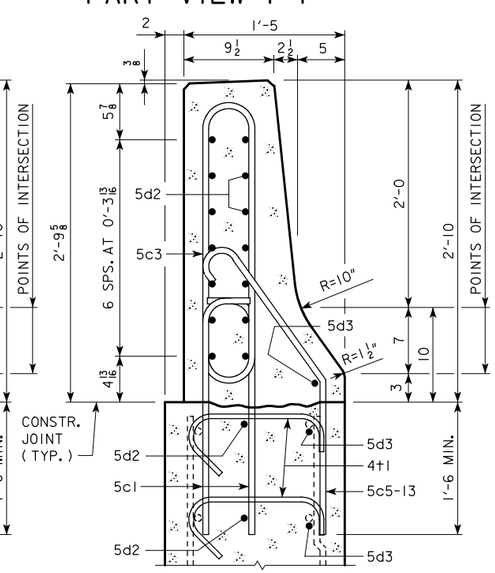

SECTION D-D

REINFORCING STEEL - ONE END SECTION

BAR	LOCATION	SHAPE	NO.	LENGTH	WEIGHT
5c1	VERTICAL, RAIL TO WING FOOTING		34	2'-10	100
5c2	VERTICAL AT NOSE, RAIL TO WING FOOTING		12	2'-9	34
5c3	VERTICAL		17	6'-1	108
5c5-13	VERTICAL		9	VARIES	34
5d1	HORIZONTAL		7	6'-8	49
5d2	HORIZONTAL		9	6'-9	63
5d3	HORIZONTAL		3	3'-5	11
4+1	WING FOOTING TIE BARS		10	VARIES	13
(INCLUDE WITH BARRIER RAIL REINFORCING)		TOTAL WEIGHT (LBS.)			412

CONCRETE PLACEMENT SUMMARY

SECTION	TOTAL
BARRIER RAIL ONE END SECTION	0.62 CU. YD.

BENT BAR DETAILS

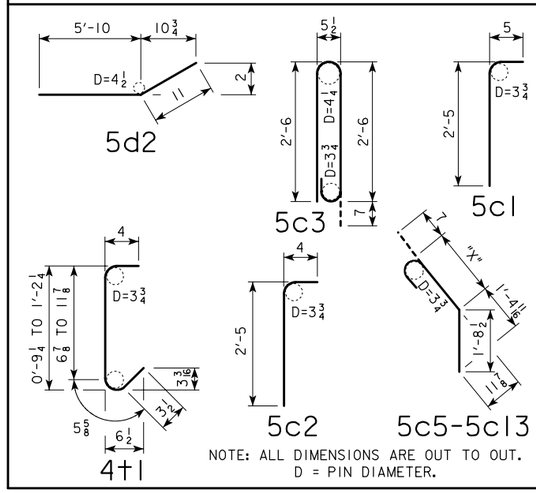

BAR	"X"
5c5	1'-0 3/16
5c6	1'-1 7/16
5c7	1'-2 11/16
5c8	1'-3 15/16
5c9	1'-4⅛
5c10	1'-6⅜
5c11	1'-7⅝
5c12	1'-8⅞
5c13	1'-10⅛

NOTES:

CONSTRUCTION JOINT BETWEEN TOP OF WING AND BARRIER IS ROUGHENED CONCRETE.

THE 10" RADIUS AND 1½" RADIUS ARE TYPICAL AND SHALL BE USED WHEN CONSTRUCTING THE CORNERS FOR VIEW A-A, SECTION B-B, SECTION C-C AND SECTION D-D.

THE 5c1, 6 - 5c2, 5c5-13, 2 - 5d2 AND 2 - 5d3 BARS ARE TO BE PLACED WITH THE ABUTMENT WING FOOTING. THE DETAILS FOR PLACEMENT ARE SHOWN ON THE LONGITUDINAL SECTION SHEET.

DASHED LINES BELOW THE TOP OF WING ARE THE ABUTMENT WING REINFORCING STEEL. SEE LONGITUDINAL SECTION SHEETS FOR PLACEMENT.

LATEST REVISION DATE :

APPROVED BY

STANDARD DESIGN - 24' ROADWAY, SINGLE SPAN BRIDGE

PRETENSIONED PRESTRESSED CONCRETE BEAM BRIDGES

JANUARY, 2005 HS20-44 LOADING

IOWA DEPARTMENT OF TRANSPORTATION - HIGHWAY DIVISION

BARRIER RAIL DETAILS

SHEET 2 OF 3

H24SI-32-05

REINFORCING STEEL-TWO BARRIER RAILS

(NOTE: THESE REINFORCING BARS TO BE USED ON ALL SKEWS)

BRIDGE LENGTH				46'-8			55'-0			67'-6			80'-0			90'-0			100'-0			110'-0		
SECTION	BAR	LOCATION	SHAPE	NO.	LENGTH	WEIGHT	NO.	LENGTH	WEIGHT	NO.	LENGTH	WEIGHT	NO.	LENGTH	WEIGHT	NO.	LENGTH	WEIGHT	NO.	LENGTH	WEIGHT	NO.	LENGTH	WEIGHT
STANDARD SECTION	5c1	VERTICAL		100	5'-11	617	116	5'-11	716	142	5'-11	876	186	5'-11	1148	206	5'-11	1271	226	5'-11	1395	246	5'-11	1518
	5c2	VERTICAL		100	6'-0	626	116	6'-0	726	142	6'-0	889	166	6'-0	1039	186	6'-0	1164	206	6'-0	1289	226	6'-0	1414
	5c3	VERTICAL		-	-	-	-	-	-	-	-	-	20	2'-10	59	20	2'-10	59	20	2'-10	59	20	2'-10	59
	5c14	VERTICAL		-	-	-	-	-	-	-	-	-	20	3'-10	80	20	3'-10	80	20	3'-10	80	20	3'-10	80
	5d1	LONGITUDINAL		36	26'-1	979	36	30'-3	1136	36	36'-6	1371	54	32'-7	1835	54	35'-11	2023	54	39'-3	2211	72	32'-6	2441
		4 END SECTIONS @ 412 LBS.				1648			1648			1648			1648			1648			1648			1648
TOTAL LBS. (INCLUDE WITH SUPERSTRUCTURE REINFORCING)						3870			4226			4784			5809			6245			6682			7160

BENT BAR DETAILS

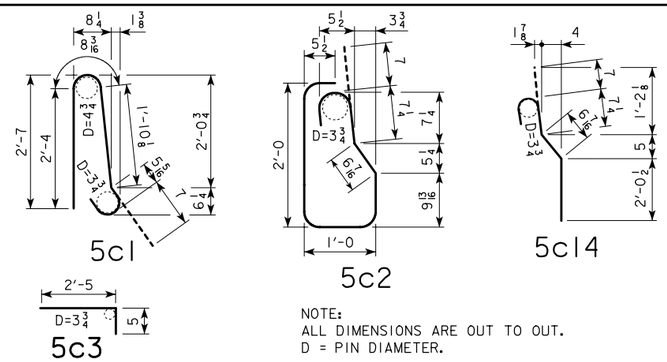

CONCRETE PLACEMENT SUMMARY

BRIDGE LENGTH		46'-8	55'-0	67'-6	80'-0	90'-0	100'-0	110'-0
STANDARD SECTION *	2 X B @ 0.1052 CU.YD. PER FT.	10.5	12.3	14.9	19.7	21.8	23.9	26.0
END SECTION	4 @ 0.62 CU.YD.	2.5	2.5	2.5	2.5	2.5	2.5	2.5
	TOTAL (CU. YD.)	13.0	14.8	17.4	22.2	24.3	26.4	28.5

* SEE SHEET H24SI-31-05 FOR DIMENSION "B".
CONCRETE QUANTITIES SHOWN ARE BASED
ON 30° SKEW BID LENGTHS.

CONCRETE BARRIER RAIL QUANTITIES

BRIDGE LENGTH		UNIT	46'-8	55'-0	67'-6	80'-0	90'-0	100'-0	110'-0
CONCRETE BARRIER RAILING	0° SKEW	L.F.	127.3	144.0	169.0	214.0	234.0	254.0	274.0
CONCRETE BARRIER RAILING	15° SKEW	L.F.	127.5	144.2	169.2	214.2	234.2	254.2	274.2
CONCRETE BARRIER RAILING	30° SKEW	L.F.	128.3	144.9	169.9	214.9	234.9	254.9	274.9

LATEST REVISION DATE :

APPROVED BY

STANDARD DESIGN - 24' ROADWAY, SINGLE SPAN BRIDGE

PRETENSIONED PRESTRESSED CONCRETE BEAM BRIDGES

JANUARY, 2005 HS20-44 LOADING

IOWA DEPARTMENT OF TRANSPORTATION - HIGHWAY DIVISION

BARRIER RAIL DETAILS
SHEET 3 OF 3

H24SI-33-05

TABLE OF OPEN RAIL DIMENSIONS AND NUMBERS

℄-℄ ABUT. BRG		46′-8			55′-0			67′-6			80′-0			90′-0			100′-0			110′-0		
SKEW		0°	15°	30°	0°	15°	30°	0°	15°	30°	0°	15°	30°	0°	15°	30°	0°	15°	30°	0°	15°	30°
DIMENSION OR NUMBER	L (FT.-IN.)	63′-8	63′-9 1/4	64′-1 9/16	72′-0	72′-1 1/4	72′-5 9/16	84′-6	84′-7 1/4	84′-11 9/16	107′-0	107′-1 1/4	107′-5 9/16	117′-0	117′-1 1/4	117′-5 9/16	127′-0	127′-1 1/4	127′-5 9/16	137′-0	137′-1 1/4	137′-5 9/16
	S (FT.-IN.)	49′-8	49′-9 1/4	50′-1 9/16	58′-0	58′-1 1/4	58′-5 9/16	70′-6	70′-7 1/4	70′-11 9/16	83′-0	83′-1 1/4	83′-5 9/16	93′-0	93′-1 1/4	93′-5 9/16	103′-0	103′-1 1/4	103′-5 9/16	113′-0	113′-1 1/4	113′-5 9/16
	F (FT.-IN.)	0′-0	0′-0	0′-0	0′-0	0′-0	0′-0	0′-0	0′-0	0′-0	5′-0	5′-0	5′-0	5′-0	5′-0	5′-0	5′-0	5′-0	5′-0	5′-0	5′-0	5′-0
	a	-	-	-	-	-	-	-	-	-	9	9	9	9	9	9	9	9	9	9	9	9

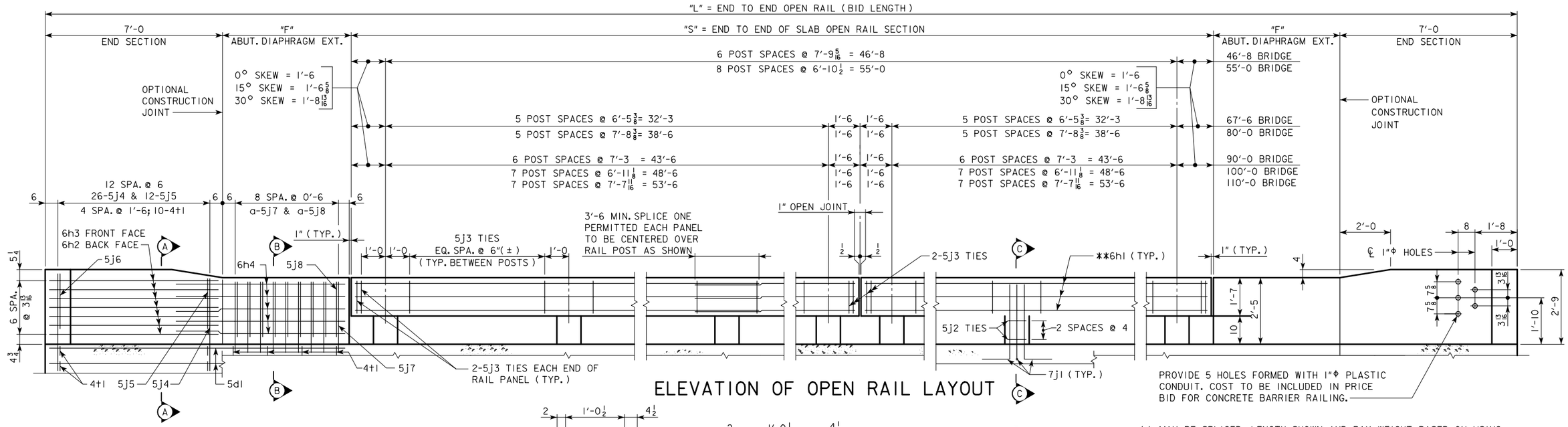

ELEVATION OF OPEN RAIL LAYOUT

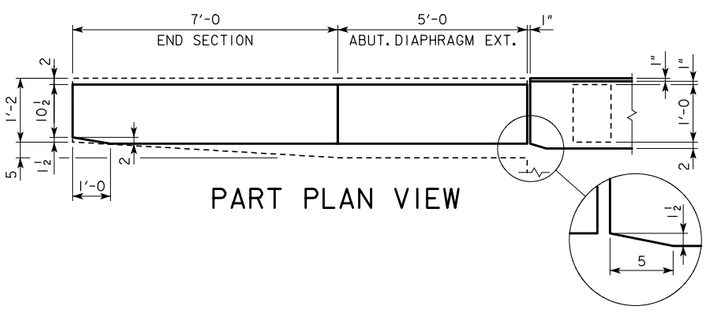

PART PLAN VIEW

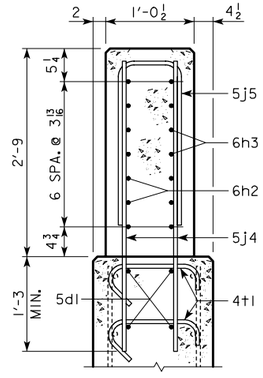

SECTION A-A

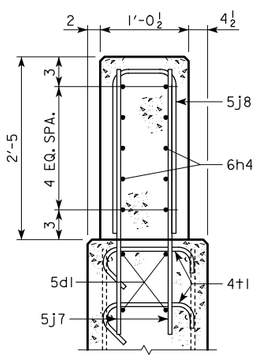

SECTION B-B

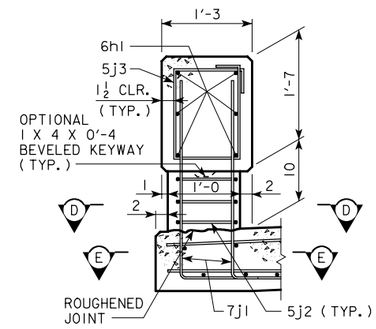

PART SECTION C-C

** MAY BE SPLICED. LENGTH SHOWN AND PAY WEIGHT BASED ON USING 30° SKEW FOR LENGTHS. ACTUAL ORDERED LENGTH WILL VARY FROM TABULATED LENGTH TO REFLECT DIFFERENT SKEW VALUES AND USE OF 3′-6 SPLICE.

PAYMENT FOR REINFORCING BARS SHALL BE BASED ON NO SPLICES, AND NO ALLOWANCE SHALL BE MADE FOR THE ADDITIONAL LENGTH OF BAR REQUIRED FOR THE USE OF SPLICES.

OPEN RAIL NOTES:

MINIMUM CLEAR DISTANCE FROM FACE OF CONCRETE TO NEAR REINFORCING BAR IS TO BE 2" UNLESS OTHERWISE NOTED OR SHOWN.

THE CONCRETE OPEN RAIL IS TO BE BID ON A LINEAL FOOT BASIS MEASURED FROM END TO END OF RAIL. THE NUMBER OF LINEAL FEET OF OPEN RAIL INSTALLED WILL BE PAID FOR AT THE CONTRACT PRICE PER LINEAL FOOT. PRICE BID FOR CONCRETE OPEN RAIL SHALL BE FULL COMPENSATION FOR FURNISHING ALL MATERIAL, EXCLUDING REINFORCING STEEL, AND ALL OF THE EQUIPMENT AND LABOR REQUIRED TO CONSTRUCT THE RAIL IN ACCORDANCE WITH THESE PLANS AND CURRENT SPECIFICATIONS.

ALL OPEN RAIL REINFORCING STEEL IS TO BE INCLUDED WITH THE SUPERSTRUCTURE REINFORCING STEEL.

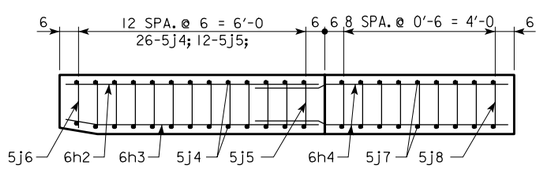

PART PLAN SECTION

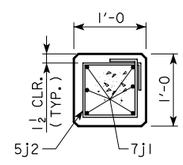

PART SECTION D-D

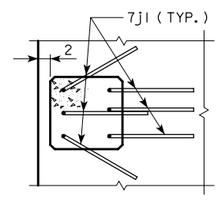

PART PLAN E-E

LATEST REVISION DATE :

APPROVED BY

STANDARD DESIGN - 24′ ROADWAY, SINGLE SPAN BRIDGE

PRETENSIONED PRESTRESSED CONCRETE BEAM BRIDGES

JANUARY, 2005 HS20-44 LOADING

IOWA DEPARTMENT OF TRANSPORTATION - HIGHWAY DIVISION

OPEN RAIL DETAILS
SHEET 1 OF 2

H24SI-34-05

OPEN RAIL REINFORCING BAR LIST - TWO RAILS

NOTE: THESE REINFORCING BARS TO BE USED ON ALL SKEWS.

	℄-℄ ABUTMENT BEARING			46'-8			55'-0			67'-6			80'-0			90'-0			100'-0			110'-0		
	BAR	LOCATION	SHAPE	NO.	LENGTH	WEIGHT	NO.	LENGTH	WEIGHT	NO.	LENGTH	WEIGHT	NO.	LENGTH	WEIGHT	NO.	LENGTH	WEIGHT	NO.	LENGTH	WEIGHT	NO.	LENGTH	WEIGHT
STANDARD SECTION	7j1	RAIL POST VERTICAL		84	4'-1	701	108	4'-1	901	144	4'-1	1202	144	4'-1	1202	168	4'-1	1402	192	4'-1	1602	192	4'-1	1602
	5j2	RAIL POST TIES		42	4'-0	175	54	4'-0	225	72	4'-0	300	72	4'-0	300	84	4'-0	350	96	4'-0	401	96	4'-0	401
	5j3	RAIL TIES		164	5'-8	969	184	5'-8	1088	216	5'-8	1277	276	5'-8	1631	304	5'-8	1797	324	5'-8	1915	380	5'-8	2246
	6h1	RAIL LONGITUDINAL		24	26'-8	961	24	30'-10	1111	24	34'-10	1256	24	41'-1	1481	24	46'-1	1661	24	51'-1	1841	24	56'-1	2022
ABUT. DIAPH. SECTION	5j7	VERTICAL		-	-	-	-	-	-	-	-	-	72	3'-10	288	72	3'-10	288	72	3'-10	288	72	3'-10	288
	5j8	VERTICAL		-	-	-	-	-	-	-	-	-	36	5'-0	188	36	5'-0	188	36	5'-0	188	36	5'-0	188
	6h4	LONGITUDINAL		-	-	-	-	-	-	-	-	-	40	7'-9	466	40	7'-9	466	40	7'-9	466	40	7'-9	466
	4t1	WING FOOTING TIE BAR		-	-	-	-	-	-	-	-	-	32	2'-2	46	32	2'-2	46	32	2'-2	46	32	2'-2	46
4 END SECTIONS	5d1	WING HORIZONTAL		16	6'-8	111	16	6'-8	111	16	6'-8	111	16	11'-8	195	16	11'-8	195	16	11'-8	195	16	11'-8	195
	5j4	ANCHOR TO SLAB		104	3'-10	416	104	3'-10	416	104	3'-10	416	104	3'-10	416	104	3'-10	416	104	3'-10	416	104	3'-10	416
	5j5	VERTICAL		48	5'-0	250	48	5'-0	250	48	5'-0	250	48	5'-0	250	48	5'-0	250	48	5'-0	250	48	5'-0	250
	5j6	VERTICAL		4	4'-11	21	4	4'-11	21	4	4'-11	21	4	4'-11	21	4	4'-11	21	4	4'-11	21	4	4'-11	21
	6h2	LONGITUDINAL		28	6'-8	280	28	6'-8	280	28	6'-8	280	28	6'-8	280	28	6'-8	280	28	6'-8	280	28	6'-8	280
	6h3	LONGITUDINAL		28	6'-8	280	28	6'-8	280	28	6'-8	280	28	6'-8	280	28	6'-8	280	28	6'-8	280	28	6'-8	280
	4t1	WING FOOTING TIE BAR		40	VARIES	51	40	VARIES	51	40	VARIES	51	40	VARIES	51	40	VARIES	51	40	VARIES	51	40	VARIES	51
TOTAL LBS.						4215			4734			5444			7095			7691			8240			8752

CONCRETE OPEN RAIL QUANTITIES

BRIDGE LENGTH		UNIT	46'-8	55'-0	67'-6	80'-0	90'-0	100'-0	110'-0
CONCRETE BARRIER RAILING	0° SKEW	L.F.	127.3	144.0	169.0	214.0	234.0	254.0	274.0
CONCRETE BARRIER RAILING	15° SKEW	L.F.	127.5	144.2	169.2	214.2	234.2	254.2	274.2
CONCRETE BARRIER RAILING	30° SKEW	L.F.	128.3	144.9	169.9	214.9	234.9	254.9	274.9

CONCRETE PLACEMENT QUANTITIES

NOTE: THESE VALUES TO BE USED FOR ALL SKEWS.

℄-℄ ABUTMENT BEARING	46'-8	55'-0	67'-6	80'-0	90'-0	100'-0	110'-0
STANDARD SECTION	7.8	9.1	11.1	13.1	14.5	16.1	17.6
ABUTMENT DIAPHRAGM EXTENSION 4 @ 0.47 CU. YDS.	-	-	-	1.9	1.9	1.9	1.9
END SECTION 4 @ 0.70 CU. YDS.	2.8	2.8	2.8	2.8	2.8	2.8	2.8
TOTAL CU.YDS.	10.6	11.9	13.9	17.8	19.2	20.8	22.3

BENT BAR DETAILS

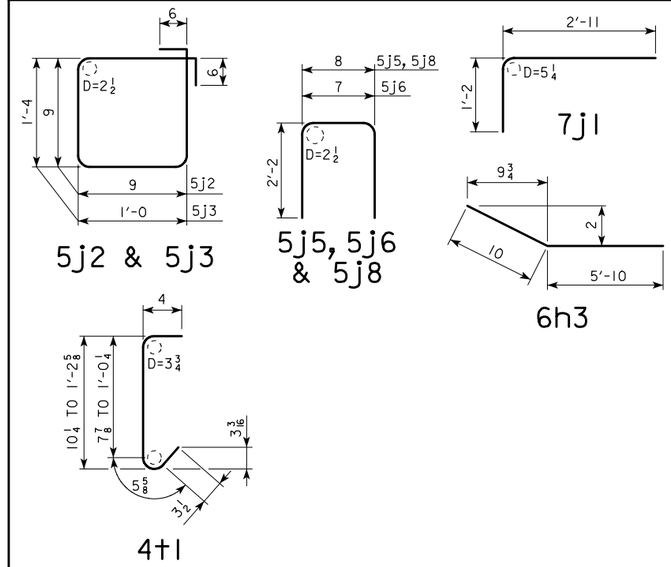

NOTE: ALL DIMENSIONS ARE OUT TO OUT.
D = PIN DIAMETER

LATEST REVISION DATE :

APPROVED BY

STANDARD DESIGN - 24' ROADWAY, SINGLE SPAN BRIDGE

PRETENSIONED PRESTRESSED CONCRETE BEAM BRIDGES

JANUARY, 2005 HS20-44 LOADING

IOWA DEPARTMENT OF TRANSPORTATION - HIGHWAY DIVISION

OPEN RAIL DETAILS
SHEET 2 OF 2

H24S1-35-05