QUANTITIES NEEDED
STRUCTURAL CONCRETE
REINFORCING STEEL
CLASS 20 EXCAVATION
REMOVALS AS PER PLAN
TRAFFIC CONTROL

SPECIFICATIONS:

SEE CULVERT MANUAL FOR CORRECT DATE

DESIGN: AASHTO SERIES OF 1992.
CONSTRUCTION: IOWA DEPARTMENT OF TRANSPORTATION STANDARD SPECIFICATIONS FOR HIGHWAY AND BRIDGE CONSTRUCTION, SERIES 2001, PLUS APPLICABLE GENERAL SUPPLEMENTAL SPECIFICATIONS, DEVELOPMENTAL SPECIFICATIONS, SUPPLEMENTAL SPECIFICATIONS AND SPECIAL PROVISIONS SHALL APPLY TO CONSTRUCTION WORK ON THIS PROJECT.

DESIGN STRESSES:

DESIGN STRESSES FOR THE FOLLOWING MATERIALS ARE IN ACCORDANCE WITH THE AASHTO STANDARD SPECIFICATIONS FOR HIGHWAY BRIDGES, SERIES OF 1992.
REINFORCING STEEL IN ACCORDANCE WITH SECTION 8, GRADE 60.
CONCRETE IN ACCORDANCE WITH SECTION 8, f'c = 3,500 PSI.

STANDARDS:
FOR DETAILS AND NOTES NOT SHOWN REFER TO THE FOLLOWING IOWA D.O.T. - HIGHWAY STANDARDS:

STANDARD	ISSUED	REVISED
**		

** NOTE: "TOP SLAB CONSTRUCTION JOINT DETAIL" DOES NOT APPLY.

SUMMARY OF REINFORCING STEEL

LOCATION	QUANTITY	TOTAL
HEADWALLS ? SKEW (2 REQ'D.)	2 AT ?	
? BARREL EXTENSION (? REQ'D.)		
	TOTAL (LBS.)	

CONCRETE PLACEMENT QUANTITIES

LOCATION	FOOTING	WALLS	SLAB	TOTAL
HEADWALLS ? SKEW (2 REQ'D.)	2 AT	2 AT	*2 AT	
? BARREL EXTENSION (? REQ'D.)				
TOTAL (CU. YDS.)				

* INCLUDES PARAPET AND TOP OF WINGWALL.

DESIGN HISTORY AT THIS SITE

DES. NO.	TYPE OF WORK
X	X
X	X
X	X
X	X
X	X

IOWA DEPARTMENT OF TRANSPORTATION - HIGHWAY DIVISION
DESIGN SHEET NO. ____ OF ____ FILE NO. _____ DESIGN NO. _____

REVISION 10-08 - RENAMED STANDARD TO 1043s1, REMOVED ESTIMATED QUANTS. BOX AND GENERAL NOTES. MOVED GENERAL NOTES, PLAN & LONGIT. SECTION TO 1043s2 STANDARD.
ENGLISHSINGLECULVERTS.DGN - 1043 - THIS SHEET REDRAWN 9-8-88

GENERAL NOTES:

SEE CULVERT MANUAL FOR CORRECT DATE

IT IS THE INTENT OF THIS DESIGN TO EXTEND THE EXISTING ___ REINFORCED CONCRETE BOX CULVERT.

COPIES OF ORIGINAL DESIGN PLANS WILL BE MADE AVAILABLE TO THE CULVERT CONTRACTOR. CONTACT THE OFFICE OF CONTRACTS - HIGHWAY DIVISION - IOWA D.O.T. - AMES. DIMENSIONS SHOWN ON THESE PLANS ARE BASED ON DESIGN PLANS (ORIGINAL DESIGN NO. _____).

FAINT LINES ON PLANS INDICATE EXISTING STRUCTURE.

UTILITY COMPANIES AND MUNICIPALITIES WHOSE FACILITIES ARE SHOWN ON THE PLANS OR KNOWN TO BE WITHIN THE CONSTRUCTION LIMITS SHALL BE NOTIFIED BY THE CONTRACTOR OF THE CONSTRUCTION STARTING DATE.

THE R.C.B. CULVERT EXTENSION SECTIONS ARE DESIGNED FOR HS20-44 LIVE LOAD AND EARTH FILLS OF ___ FEET. THIS DESIGN IS BASED ON LOAD FACTOR DESIGN, ACCORDING TO THE 1983 AASHTO SPECIFICATIONS, FOR VERTICAL LOADS THE WEIGHT OF EARTH IS ASSUMED AS 140 PCF. FOR LATERAL EARTH LOADS EQUIVALENT FLUID PRESSURE IS ASSUMED AS 36 PSF/FT. Z = 170 K/in FOR CRACK CONTROL.

THE CONTRACTOR MAY SUBMIT ALTERNATE FROST TROUGH DIMENSIONS FOR APPROVAL. ANY ADDITIONAL COSTS DUE TO CHANGE IN THE FROST TROUGH DIMENSIONS IS TO BE PAID FOR BY THE CONTRACTOR.

FLOOR OF BARREL IS TO BE FINISHED SMOOTH. SIDES OF FOOTING ARE TO BE FORMED TO INSURE CORRECT LINE AND GRADE.

THE PERMISSIBLE CONSTRUCTION JOINT AT THE TOP OF THE WALLS MAY BE LOWERED AT THE CONTRACTOR'S OPTION WITH ENGINEER'S APPROVAL.

THE VERTICAL BARS IN THE WALLS MAY BE SPLICED ABOVE THE FOOTING AT THE CONTRACTOR'S OPTION AS FOLLOWS:

BAR SIZE NUMBER	4	5	6	7	8
MINIMUM SPLICE LENGTH	21"	26"	31"	43"	55"

THIS SPLICE, IF USED WILL BE AT THE CONTRACTOR'S EXPENSE.

METAL BAR CHAIRS SPACED AT NOT OVER 3'-0 C.-C. IN EITHER DIRECTION ARE TO BE USED TO SUPPORT ALL SLAB AND FLOOR STEEL AS OUTLINED IN THE STANDARD SPECIFICATIONS.

THE REINFORCEMENT SUPPLIED FOR THIS STRUCTURE SHALL BE GRADE 60.

REINFORCING BAR CLEARANCES WILL BE AS FOLLOWS:

EDGE CLEARANCES 2" EXCEPT
- TOP OF FLOOR $2\frac{1}{4}$" TO NEAR TRANSV. REINF. BAR
- BOTTOM OF FLOOR $3\frac{1}{2}$" TO NEAR TRANSV. REINF. BAR

END CLEARANCES:
- VERTICAL TOP 2"
- VERTICAL BOTTOM $3\frac{1}{2}$"
- TRANSVERSE 2"

CLASS 20 EXCAVATION MATERIAL UNSUITABLE FOR BACKFILLING SHALL BE DISPOSED OF IN A MANNER THAT WILL LEAVE THE SITE IN A NEAT CONDITION.

THE PRICE BID FOR "REMOVALS AS PER PLAN" SHALL INCLUDE THE COST FOR REMOVALS OF PORTIONS OF THE EXISTING CULVERT, AND THE SETTING OF THE DOWEL BARS INTO EXISTING CONCRETE.

ALL DIMENSIONS AND DETAILS SHOWN ON THESE PLANS PERTINENT TO NEW CONSTRUCTION IN RELATION TO EXISTING PORTIONS OF THE STRUCTURE SHALL BE VERIFIED IN THE FIELD BY THE CONTRACTOR BEFORE STARTING CONSTRUCTION.

REMOVAL OF THE EXISTING CULVERT SHALL BE ON A VERTICAL PLANE PARALLEL WITH AND AT THE FRONT FACE OF THE EXISTING PARAPET, AND TO THE WIDTH OF THE FLOOR OF THE PROPOSED EXTENSION. THE REMOVAL LINE SHALL BE INITIATED WITH A $2\frac{1}{2}$"± DEEP SAW CUT ON THE TOP AND BOTH SIDES OF EACH WALL, AND ACROSS THE TOP OF THE FLOOR. THIS SAW CUT SHOULD CUT THRU ANY EXISTING LONGITUDINAL REINFORCING THEREBY FACILITATING A NEAT NON-SPALLED BREAK LINE. IF EXISTING TOP OF PARAPETS WILL BE WITHIN 0'-6 OF PROPOSED SUBGRADE ELEVATION, THE PARAPETS SHALL BE REMOVED DOWN TO AN ELEVATION 1"± ABOVE THE TOP OF THE EXISTING SLAB. ANY EXISTING PARAPET VERTICAL BARS EXPOSED DURING PARAPET REMOVAL SHALL BE CUT OFF FLUSH WITH THE PARAPET REMOVAL LINE AND PAINTED WITH TWO COATS OF ZINC RICH PAINT.

ALL REMOVALS SHALL BE CAREFULLY ACCOMPLISHED AND ANY CONCRETE DAMAGED BY THE CONTRACTOR THAT IS NOT TO BE REMOVED SHALL BE REPAIRED BY THE CONTRACTOR AT NO EXTRA COST TO THE STATE. REMOVALS SHALL BE IN ACCORDANCE WITH SECTION 2401, OF THE STANDARD SPECIFICATIONS.

THE PROPOSED CULVERT EXTENSION SHALL ABUT AGAINST THE FRONT FACE OF THE EXISTING PARAPET. $\frac{5}{8}$"Φ × 2'-6 DOWELS WITH A 10" MINIMUM EMBEDMENT INTO EXISTING CONCRETE SHALL BE SET AROUND THE ENTIRE PERIPHERY OF THE EXISTING CULVERT. DOWELS SHALL BE CENTERED IN THE EXISTING SLAB, WALLS AND FLOOR. DOWELS SHALL BE AT 1'-0 MAXIMUM SPACING C.-C. OF DOWELS. DOWELS SHALL BE SET WITH POLYMER GROUT IN ACCORDANCE WITH ARTICLE 2301.03, E, OF THE STANDARD SPECIFICATIONS, AND CURRENT SUPPLEMENTAL SPECIFICATIONS OF THE IOWA D.O.T. HIGHWAY DIVISION.

THE ROADWAY WILL BE OPEN TO TRAFFIC DURING CONSTRUCTION.

SINCE THE HIGHWAY WILL NOT BE CLOSED TO TRAFFIC DURING THIS CONSTRUCTION, THE CONTRACTOR MAY FEEL TEMPORARY SHORING (SHEET PILE OR OTHER) IS NECESSARY TO ENSURE THAT THE SHOULDER WILL NOT SLOUGH IN WHILE CULVERT IS BEING EXTENDED. HOWEVER, IF FOR ANY REASON SUCH SHORING IS DEEMED NECESSARY, THE CONTRACTOR WILL SUBMIT THE SHORING PLAN TO THE ENGINEER FOR APPROVAL. COST OF SHORING IF REQUIRED WILL BE CONSIDERED INCIDENTAL TO CONSTRUCTION AND NO DIRECT PAYMENT WILL BE MADE. ALL MATERIAL USED FOR SHORING SHALL REMAIN THE PROPERTY OF THE CONTRACTOR. IN ADDITION TO THE REQUIREMENTS NOTED ABOVE, ARTICLE 1107.07, OF THE STANDARD SPECIFICATIONS, STILL APPLIES.

KEYWAY DIMENSIONS SHOWN ON THE PLANS ARE BASED ON NOMINAL DIMENSIONS UNLESS STATED OTHERWISE. IN ADDITION, THE BEVEL USED ON THE KEYWAY SHALL BE LIMITED TO A MAXIMUM OF 10 DEGREES FROM VERTICAL.

BENCH MARK :

THESE BRIDGE PLANS LABEL ALL REINFORCING STEEL WITH ENGLISH NOTATION (5a1 IS $\frac{5}{8}$ INCH DIAMETER BAR). ENGLISH REINFORCING STEEL RECEIVED IN THE FIELD MAY DISPLAY THE FOLLOWING "BAR DESIGNATION". THE "BAR DESIGNATION" IS THE STAMPED IMPRESSION ON THE REINFORCING BARS, AND IS EQUIVALENT TO THE BAR DIAMETER IN MILLIMETERS.

ENGLISH SIZE	3	4	5	6	7	8	9	10	11
BAR DESIGNATION	10	13	16	19	22	25	29	32	36

TRAFFIC WILL BE MAINTAINED AT ALL TIMES IN ACCORDANCE WITH THE TRAFFIC CONTROL PLANS SHOWN IN THESE PLANS.

TRAFFIC CONTROL ADJACENT TO THE CULVERT WILL BE THE RESPONSIBILITY OF THE CULVERT CONTRACTOR. THE CULVERT CONTRACTOR IS TO COORDINATE CONSTRUCTION OF THE CULVERT WITH THE ROAD CONTRACTOR.

ANY DIMENSIONAL TRANSITION REQUIRED BETWEEN EXISTING STRUCTURE AND THE EXTENSION SHALL BE MADE IN THE FIRST _____ OF NEW WORK.

WHEN DE-WATERING PRESENTS A PROBLEM FOR PLACING THE CURTAIN WALLS AS DETAILED, ALTERNATE METHODS SUCH AS STEEL SHEET PILE AND PRECAST CONCRETE WALLS MAY BE APPROVED BUT AT NO ADDITIONAL COST. THE CONTRACTOR IS TO SUBMIT TO THE ENGINEER FOR APPROVAL COMPLETE DRAWINGS OF THE PROPOSED CURTAIN WALL ALTERNATE BEFORE BEGINNING CONSTRUCTION.

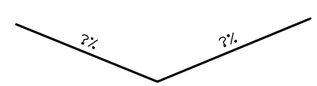

U. A. C. EXISTING GRADE

LONGITUDINAL SECTION ALONG ℄ CULVERT

ANTICIPATED SETTLEMENT =

SITUATION PLAN

HYDRAULIC DATA:

DRAINAGE AREA :

LOCATION:

IOWA DEPARTMENT OF TRANSPORTATION - HIGHWAY DIVISION

DESIGN SHEET NO. ____ OF ____ FILE NO. _____ DESIGN NO. _____

CORRECTION 02-10 - CHANGED THE SPECIFICATION REFERENCE FOR POLYMER GROUT IN THE GENERAL NOTES. DELETED THE VALUE ENGINEERING NOTE IN THE GENERAL NOTES.
ENGLISHSINGLECULVERTS.DGN - 1043s2 - THIS SHEET ISSUED 10-08.

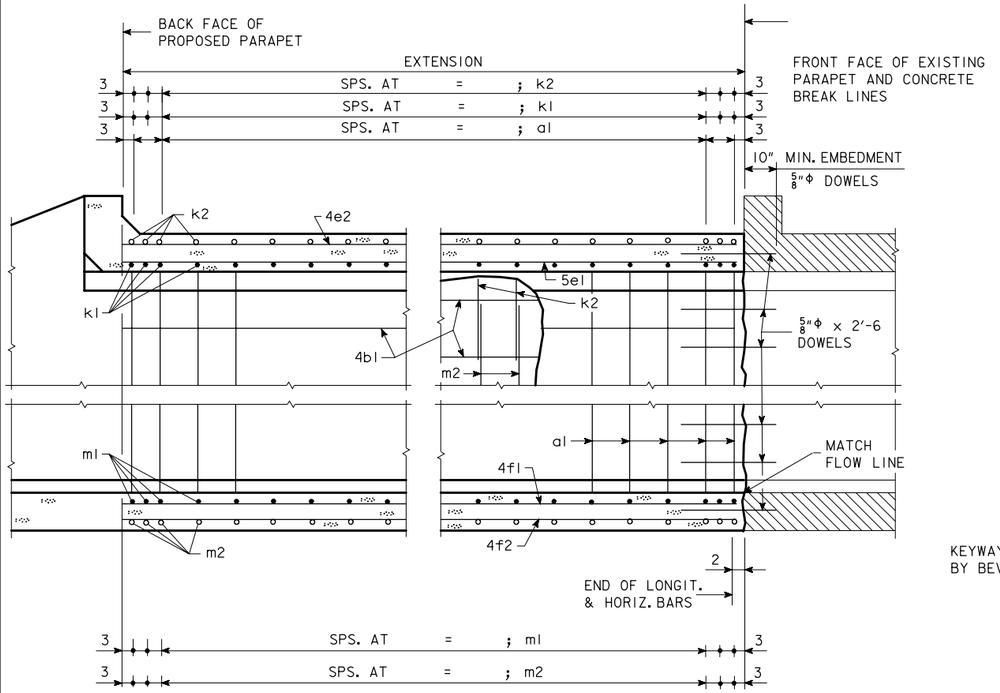

PART LONGITUDINAL SECTION

(ALONG ℄ OF CULVERT)

NOTE: ALL LONGITUDINAL BARREL STEEL SHALL EXTEND AT LEAST TO THE BACKFACE OF PARAPET.

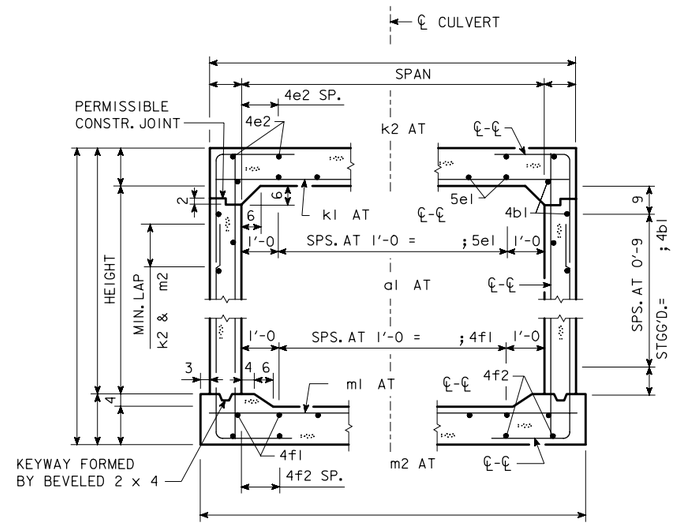

SECTION THRU BARREL

(NORMAL TO ℄ CULVERT)

NOTE:
ALL TRANSVERSE REINFORCING BARS AND HORIZONTAL LEGS OF CORNER BARS SHALL BE PLACED PARALLEL TO THE CONCRETE BREAK LINE AND NEW PARAPET.
DIMENSIONS SHOWN FOR ℄-℄ OF TRANSVERSE BARS, VERTICAL WALL BARS, AND CORNER BARS ARE MEASURED ALONG ℄ CULVERT.
CONCRETE PER FOOT OF BARREL:

SLAB	=	CU. YDS.
WALLS	=	CU. YDS.
FLOOR	=	CU. YDS.
TOTAL	=	CU. YDS.

REINFORCING BAR LIST - ONE EXTENSION

BAR	LOCATION	SHAPE	NO.	LENGTH	WEIGHT
a1	WALLS, F.F.V.	—			
4b1	WALLS, F.F.H. & B.F.H.	—			
5e1	SLAB, BOTT. LONGIT.	—			
4e2	SLAB, TOP LONGIT.	—			
4f1	FLOOR, TOP LONGIT.	—			
4f2	FLOOR, BOTT. LONGIT.	—			
k1	SLAB, BOTT. TRANSV.	—			
k2	SLAB, TOP CORNER	⌐			
m1	FLOOR, TOP TRANSV.	—			
m2	FLOOR, BOTT. CORNER	L			
	5/8" Φ DOWELS	—		2'-6	
	REINFORCING STEEL - TOTAL (LBS.)				

BENT BAR DETAILS

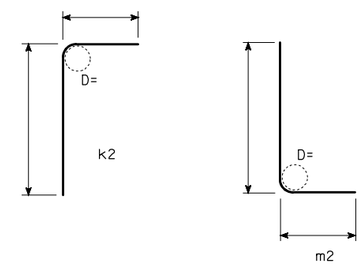

NOTE: ALL DIMENSIONS ARE OUT TO OUT. D = PIN DIAMETER.

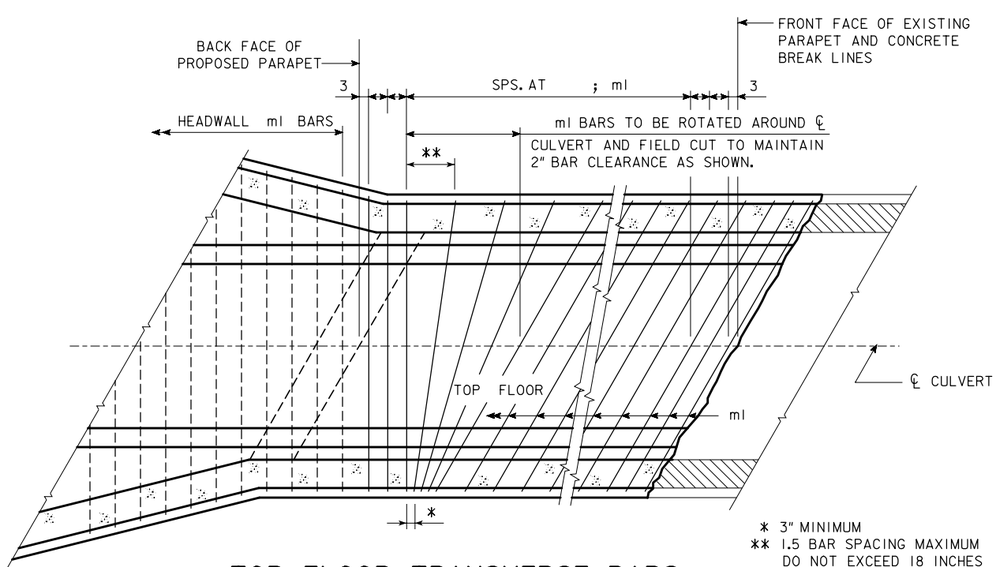

TOP FLOOR TRANSVERSE BARS

(REQUIRED FOR SKEWED CULVERTS ONLY)

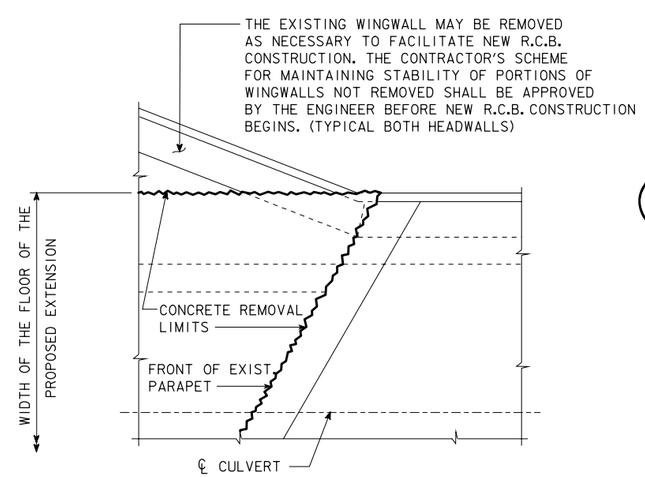

PART REMOVAL PLAN

FOR EXISTING SKEWED HEADWALLS USE THIS SHEET.

IOWA DEPARTMENT OF TRANSPORTATION - HIGHWAY DIVISION
DESIGN SHEET NO. ____ OF ____ FILE NO. _____ DESIGN NO. _____

CORRECTION 04-09 - CHANGED THE CONCRETE BREAK LIMITS AT THE CORNERS FOR SKEWED HEADWALLS. ADDED THE EXISTING PARAPET AT PART LONGIT. SECTION.
HE1044.SOI (HSTD01044.SOI--LEP: THIS SHEET REDRAWN, DEVICE:ZHAO:(200,004) ARCH.TAPE NO. 15 DATE 9-8-88)

DESIGN TEAM	CULVERT EXTENSION DETAILS	STANDARD SHEET 1044	COUNTY	PROJECT NUMBER	SHEET NUMBER

----- END SECTION PARAPET DETAILS

REINFORCING BAR LIST - END SECTION PARAPET					
BAR	LOCATION	SHAPE	NO.	LENGTH	WEIGHT
4i1	PARAPET, VERTICAL			6'-1	
7j1	PARAPET, HORIZONTAL		4		
			TOTAL - LBS.		

CONCRETE ABOVE SLAB

PARAPET = ____ CU.YDS.

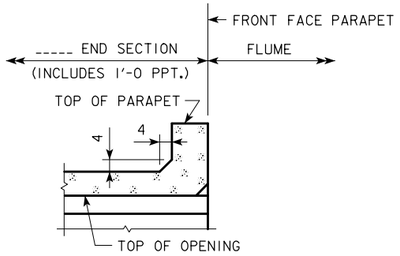

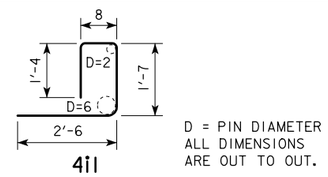

4i1

BENT BAR DETAILS

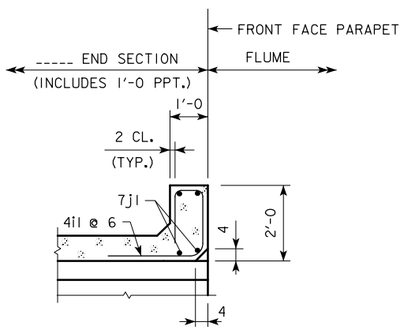

SECTION THRU PARAPET

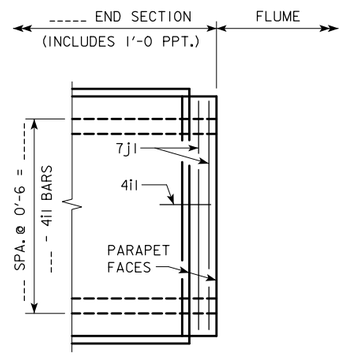

PLAN VIEW

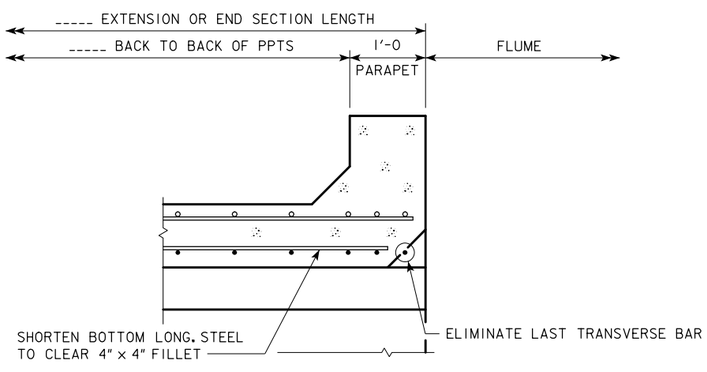

BARREL END SECTION AND PARAPET DETAILS WITH FLUME OUTLET

NOTE: ADD PARAPET CONCRETE AND REINFORCING STEEL TO BARREL END SECTION QUANTITY.

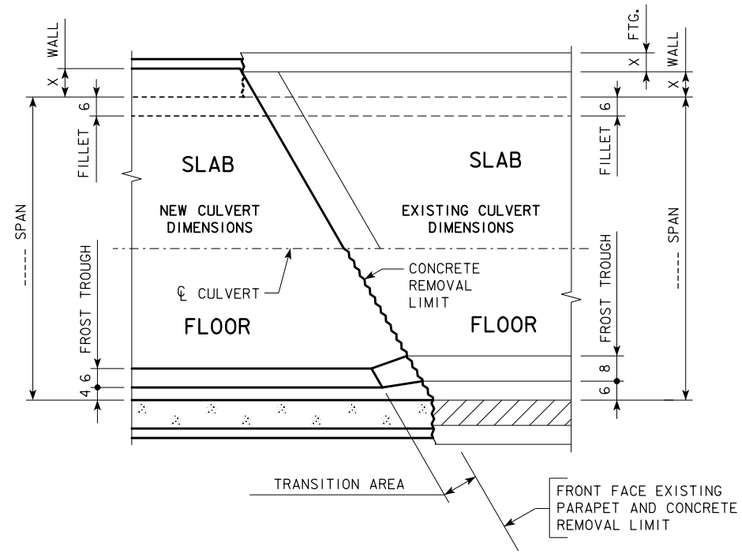

CONCRETE TRANSITION DETAILS

(PLAN VIEW)

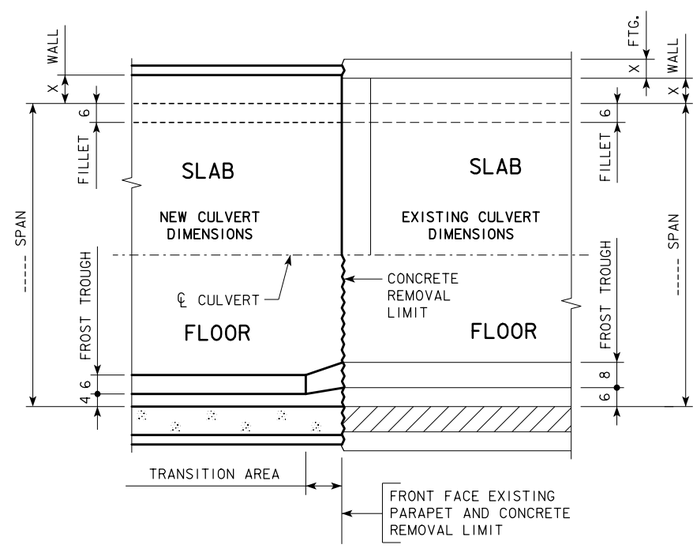

CONCRETE TRANSITION DETAILS

(PLAN VIEW)

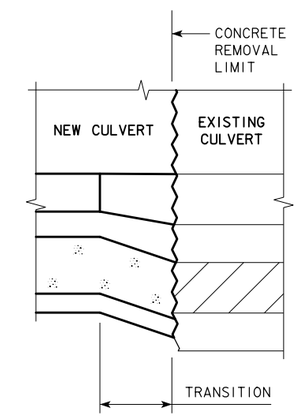

NEW BARREL CONCRETE THICKNESSES SHALL BE MAINTAINED MINIMALLY WHEN TRANSITIONING TO MEET EXISTING BARREL INTERIOR SURFACES. OUTSIDE CONCRETE SURFACES DO NOT HAVE TO BE TRANSITIONED TO MATCH EXISTING SURFACES.

CONCRETE TRANSITION DETAILS

(WALL TRANSITION SHOWN - TYPICAL FOR SLAB)

NOTE: REFER TO THE BRIDGE DESIGN MANUAL, SECTION 8 FOR CULVERT EXTENSION DETAILS FOR TRANSITION INFORMATION.

IOWA DEPARTMENT OF TRANSPORTATION - HIGHWAY DIVISION

DESIGN SHEET NO. ____ OF ____ FILE NO. _____ DESIGN NO. _____

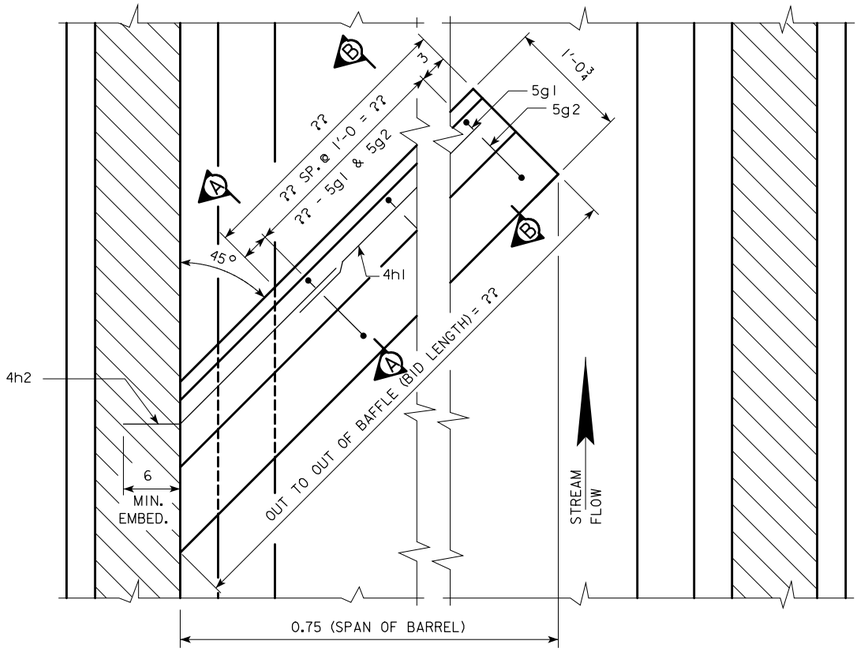

BAFFLE PLAN

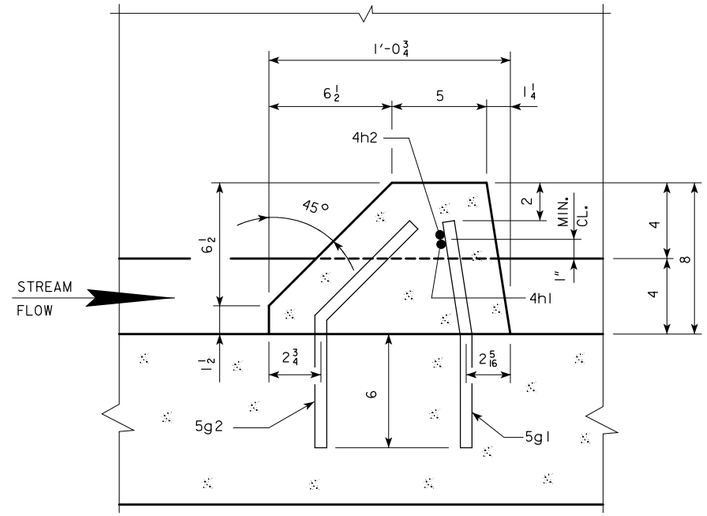

SECTION A-A

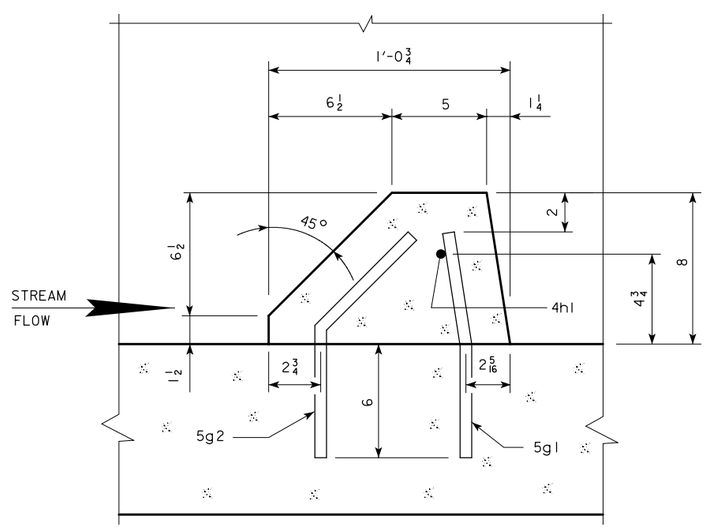

SECTION B-B

BENT BAR DETAILS

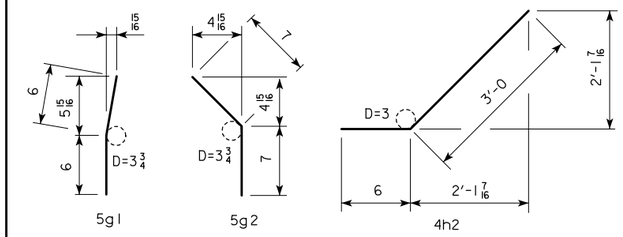

NOTE: ALL DIMENSIONS ARE OUT TO OUT. D = PIN DIAMETER.

BAFFLE NOTES:

?? BAFFLES ARE TO BE PLACED WITHIN THE REINFORCED CONCRETE BOX CULVERT SPACED AS SHOWN ELSEWHERE IN THESE PLANS. BAFFLES SHALL BE CONSTRUCTED TO THE DIMENSIONS SHOWN ON THIS SHEET.

CLEAR DISTANCE FROM FACE OF CONCRETE TO NEAR REINFORCING BAR IS TO BE 2" UNLESS OTHERWISE NOTED OR SHOWN.

ALL CONCRETE IS TO BE CLASS C.

MINIMUM SPLICE LENGTH FOR THE 4h1 AND 4h2 BARS IS 12".

THE 5g1, 5g2, AND 4h2 BARS SHALL BE SET AS DOWELS IN DRILLED HOLES. HOLES ARE TO BE 6" DEEP. THE DOWELS SHALL BE INSTALLED IN ACCORDANCE WITH THE MANUFACTURER'S RECOMMENDATIONS. THE DOWELS SHALL BE INSTALLED USING AN EPOXY GROUT SYSTEM IN ACCORDANCE WITH STANDARD SPECIFICATIONS ARTICLE 2301.12 OF THE IOWA D.O.T. HIGHWAY DIVISION.

BONDING OF THE BAFFLES TO THE BARREL FLOOR SHALL BE IN ACCORDANCE WITH STANDARD SPECIFICATIONS ARTICLE 2403.14 OF THE IOWA .DO.T. HIGHWAY DIVISION.

THE BAFFLES ARE TO BE BID ON A LINEAL FOOT BASIS. THE NUMBER OF LINEAL FEET OF BAFFLE INSTALLED WILL BE PAID FOR AT THE CONTRACT PRICE PER LINEAL FOOT FOR "BAFFLE OR WEIR FOR REINFORCED CONCRETE BOX CULVERT" BASED ON PLAN QUANTITY. PRICE BID FOR "BAFFLE OR WEIR FOR REINFORCED CONCRETE BOX CULVERT" SHALL BE FULL COMPENSATION FOR FURNISHING ALL MATERIAL AND ALL OF THE EQUIPMENT AND LABOR REQUIRED TO CONSTRUCT THE BAFFLES IN ACCORDANCE WITH THESE PLANS AND CURRENT SPECIFICATIONS.

CROSS SECTIONAL AREA OF THE BAFFLE IS 0.53 SQUARE FEET.

BAFFLE QUANTITIES

ITEM	UNIT	QUANTITY
BAFFLE FOR RCB CULVERT	L.F.	

IOWA DEPARTMENT OF TRANSPORTATION - HIGHWAY DIVISION

DESIGN SHEET NO. ____ OF ____ FILE NO. _____ DESIGN NO. _____

DESIGN TEAM	CULVERT BAFFLE DETAILS	STANDARD SHEET 1060	COUNTY	PROJECT NUMBER	SHEET NUMBER

BENT BAR DETAILS

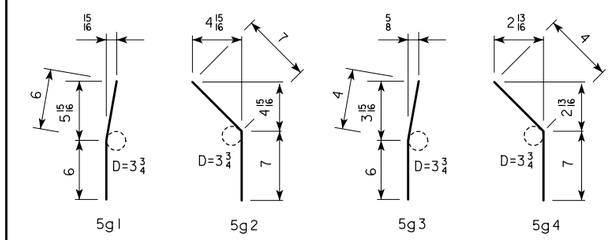

NOTE: ALL DIMENSIONS ARE OUT TO OUT. D = PIN DIAMETER.

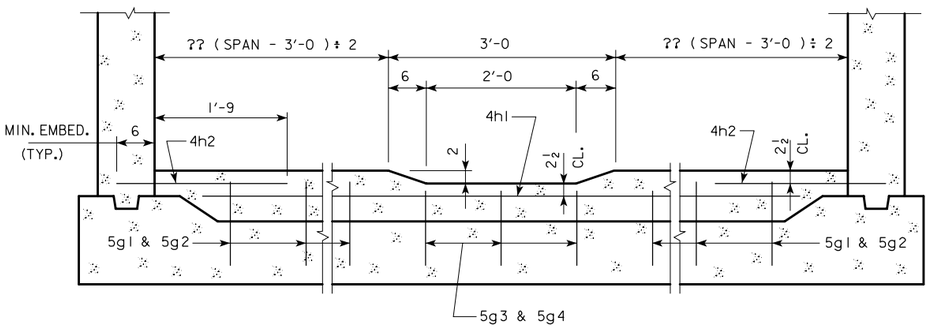

WEIR ELEVATION

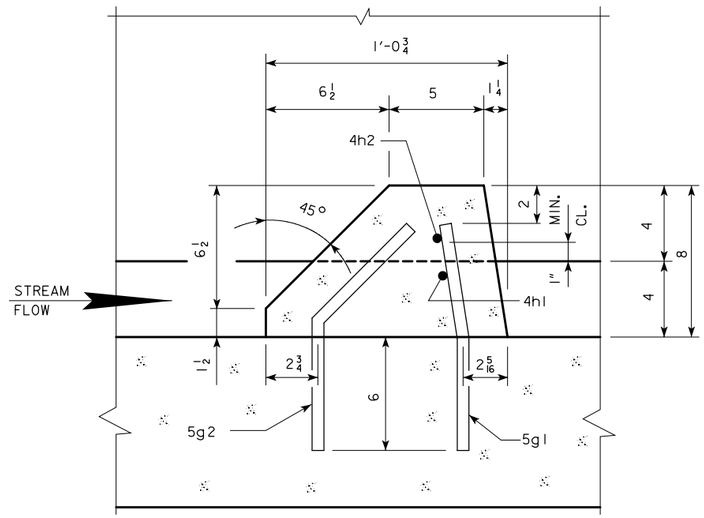

SECTION A-A

WEIR NOTES:

?? WEIRS ARE TO BE PLACED WITHIN THE REINFORCED CONCRETE BOX CULVERT SPACED AS SHOWN ELSEWHERE IN THESE PLANS. WEIRS SHALL BE CONSTRUCTED TO THE DIMENSIONS SHOWN ON THIS SHEET.

CLEAR DISTANCE FROM FACE OF CONCRETE TO NEAR REINFORCING BAR IS TO BE 2" UNLESS OTHERWISE NOTED OR SHOWN.

ALL CONCRETE IS TO BE CLASS C.

MINIMUM SPLICE LENGTH FOR THE 4h1 AND 4h2 BARS IS 12".

THE 5g1, 5g2, 5g3, 5g4 AND 4h2 BARS SHALL BE SET AS DOWELS IN DRILLED HOLES. HOLES ARE TO BE 6" DEEP. THE DOWELS SHALL BE INSTALLED IN ACCORDANCE WITH THE MANUFACTURER'S RECOMMENDATIONS. THE DOWELS SHALL BE INSTALLED USING AN EPOXY GROUT SYSTEM IN ACCORDANCE WITH STANDARD SPECIFICATIONS ARTICLE 2301.12 OF THE IOWA D.O.T. HIGHWAY DIVISION.

BONDING OF THE WEIRS TO THE BARREL FLOOR SHALL BE IN ACCORDANCE WITH STANDARD SPECIFICATIONS ARTICLE 2403.14 OF THE IOWA .DO.T. HIGHWAY DIVISION.

IF BARREL SPAN IS LESS THAN 6' THEN 4h2 BARS SHALL BE FIELD BENT TO PROVIDE 2" MIN. CLEAR DISTANCE FROM THE TOP OF THE NOTCH.

THE WEIRS ARE TO BE BID ON A LINEAL FOOT BASIS. THE NUMBER OF LINEAL FEET OF WEIR INSTALLED WILL BE PAID FOR AT THE CONTRACT PRICE PER LINEAL FOOT FOR "BAFFLE OR WEIR FOR REINFORCED CONCRETE BOX CULVERT" BASED ON PLAN QUANTITY. PRICE BID FOR "BAFFLE OR WEIR FOR REINFORCED CONCRETE BOX CULVERT" SHALL BE FULL COMPENSATION FOR FURNISHING ALL MATERIAL AND ALL OF THE EQUIPMENT AND LABOR REQUIRED TO CONSTRUCT THE WEIRS IN ACCORDANCE WITH THESE PLANS AND CURRENT SPECIFICATIONS.

CROSS SECTIONAL AREA OF THE WEIR IS 0.53 SQUARE FEET.

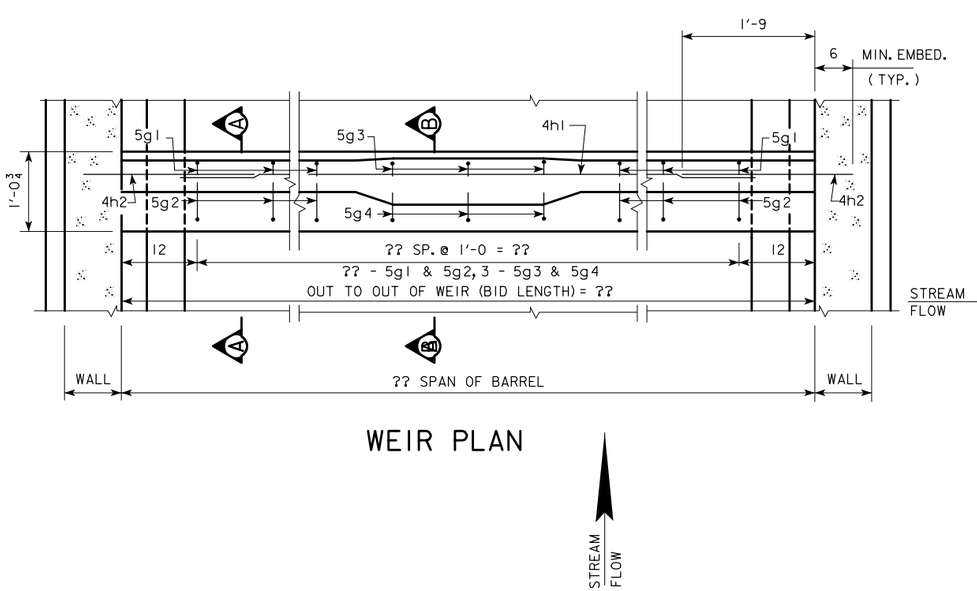

WEIR PLAN

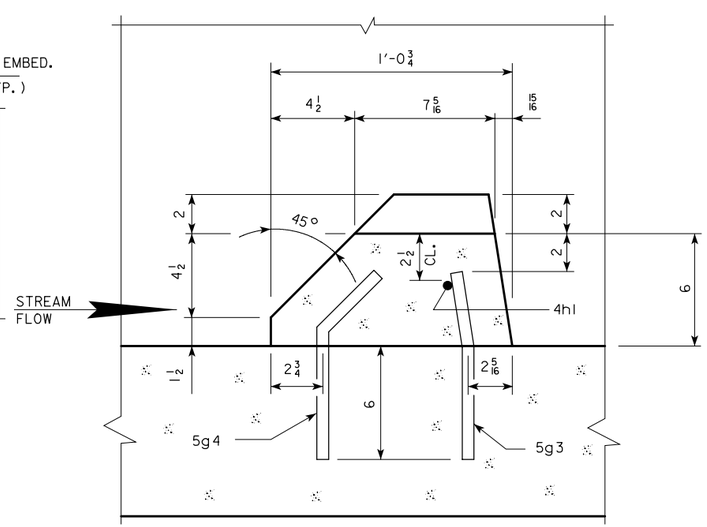

SECTION B-B

WEIR QUANTITIES

ITEM	UNIT	QUANTITY
WEIR FOR RCB CULVERT	L.F.	

IOWA DEPARTMENT OF TRANSPORTATION - HIGHWAY DIVISION

DESIGN SHEET NO. ____ OF ____ FILE NO. _____ DESIGN NO. _____

DESIGN TEAM	CULVERT WEIR DETAILS	STANDARD SHEET 1061	COUNTY	PROJECT NUMBER	SHEET NUMBER

ENGLISHSINGLECULVERTS - 1061 - THIS SHEET ISSUED 09-03.

REINFORCING BAR LIST - FLUME

BAR	LOCATION	SHAPE	NO.	LENGTH	WEIGHT
4a1	WALLS FFV	I		LISTED	
5b1	WALLS FFH	╲	2		
4b2	WALLS BFH	╲	2		
5b5	WALLS FFH	╲	4	LISTED	
4b6	WALLS BFH	╲	4	LISTED	
5c1	BOTT. FLOOR & WALLS BFV	⊔		LISTED	
6f1	FLOOR LONGIT. TOP	╲			
5f2	FLOOR LONGIT. BOTT.	╲			
5m1	FLOOR TRANSV. TOP	—			
5s1	WALLS BOTH F ALONG SLOPE	╲	4		
5u1	FENCE ANCHORS (GALVANIZED)	⊃	2	3'-1	6
				TOTAL (LBS.)	

WEIGHT OF BARS OVER 40'-0 LONG INCLUDE AN ALLOWANCE FOR A 2'-2 LAP BUT LENGTHS SHOWN FOR BARS OVER 40'-0 LONG DO NOT INCLUDE THE LAP.

LISTED BARS

BAR 4a1
? BARS
? AT ?
? VAR. - 2 EA. LGTH.

BAR 5c1
? BARS
? AT ?
? VAR.

BAR 5b5 AND 4b6
4 BARS - 2 EA. LGTH.

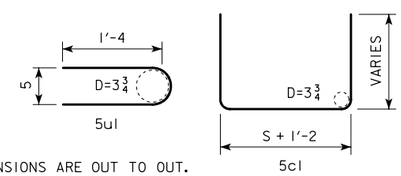

NOTE:
ALL DIMENSIONS ARE OUT TO OUT.
D = PIN DIAMETER.

BENT BAR DETAILS

FLUME DATA

∡ A = 18°26'
∡ C = 1°00'
B = 9'-9 15/16
S =
V = 2'-4 7/16
W =
M = 2'-3
T = 0'-11
H = 3'-0

CURVE DATA

C. L. =
L2 =
L3 = 18'-8 7/16
D = 9'-4 1/2
E = 9'-3 15/16
P. C. ELEV. =
P. I. ELEV. =
P. P. ELEV. =
P. T. ELEV. =
X1 = 2'-11 1/4
X2 = 1'-7 15/16
X3 = 0'-8 7/8
X4 = 0'-2 1/16
L3/4 = 4'-8 1/8(-)

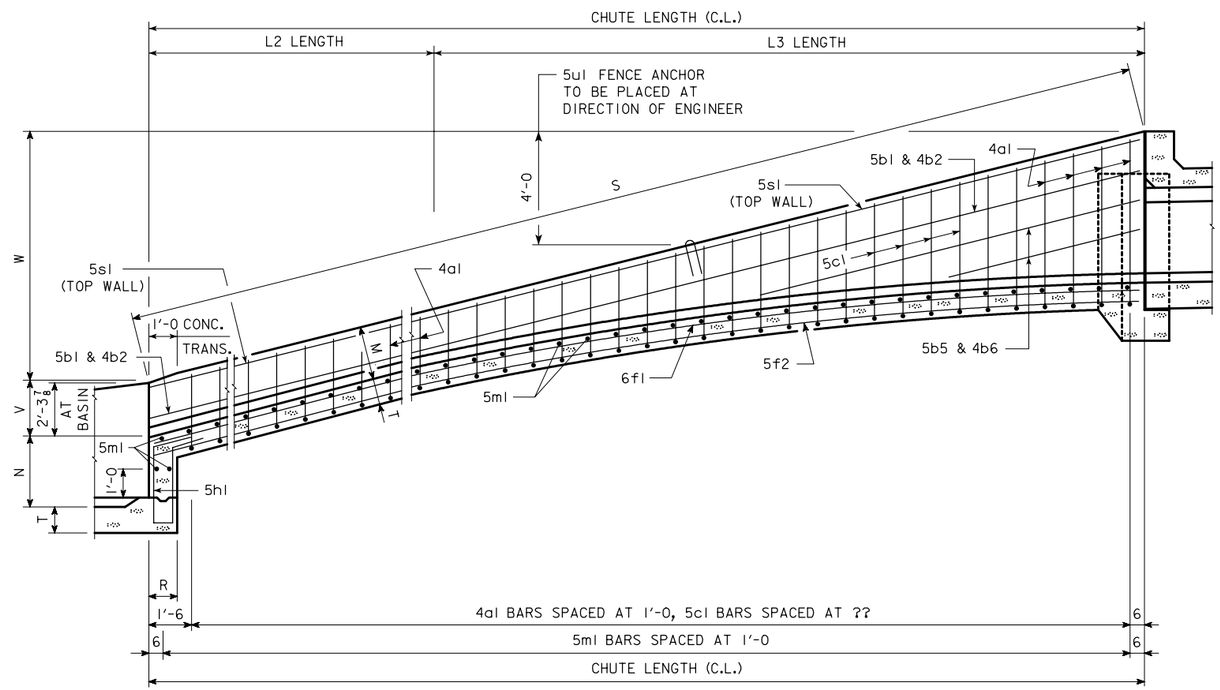

?'x3' FLUME CHUTE - LONGITUDINAL SECTION

CONCRETE PLACEMENT QUANTITIES

LOCATION	FOOTING	WALLS	TOTAL
FLUME			
JUNCTION BELL			
BASIN			
TOTAL (CU. YDS.)			

NOTE:
SEE STANDARD RCF-01-04 FOR FLUME INFORMATION AND DETAILS NOT SHOWN.

SEE STANDARD FBJ-01-04 FOR BELL JOINT INFORMATION AND DETAILS NOT SHOWN.

SEE STANDARD RCFB-01-04 FOR FLUME BASIN INFORMATION AND DETAILS NOT SHOWN.

IOWA DEPARTMENT OF TRANSPORTATION - HIGHWAY DIVISION
DESIGN SHEET NO. ____ OF ____ FILE NO. _____ DESIGN NO. _____

CORRECTION 04-09 - NOTE FOR LAPPING BARS OVER 40'-0 LONG CHANGED.
HEI070.SOI - THIS SHEET ISSUED 09-03.

REINFORCING BAR LIST - FLUME

BAR	LOCATION	SHAPE	NO.	LENGTH	WEIGHT
4a1	WALLS FFV	I		LISTED	
5b1	WALLS FFH	╲	4		
4b2	WALLS BFH	╲	4		
5b5	WALLS FFH	╲	4	LISTED	
4b6	WALLS BFH	╲	4	LISTED	
?c1	BOTT. FLOOR & WALLS BFV	⊔		LISTED	
6f1	FLOOR LONGIT. TOP	╲			
5f2	FLOOR LONGIT. BOTT.	╲			
5m1	FLOOR TRANSV. TOP	—			
5s1	WALLS BOTH F ALONG SLOPE	╲	4		
5u1	FENCE ANCHORS (GALVANIZED)	⊃	2	3'-1	6
				TOTAL (LBS.)	

WEIGHT OF BARS OVER 40'-0 LONG INCLUDE AN ALLOWANCE FOR A 2'-2 LAP BUT LENGTHS SHOWN FOR BARS OVER 40'-0 LONG DO NOT INCLUDE THE LAP.

LISTED BARS

BAR 4a1
? BARS
? AT ?
? VAR. - 2 EA. LGTH.

BAR ?c1
? BARS
? AT ?
? VAR.

BAR 5b5 AND 4b6
4 BARS - 2 EA. LGTH.

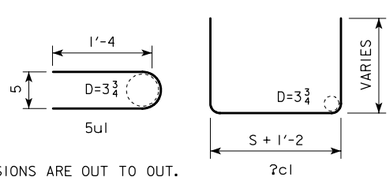

NOTE:
ALL DIMENSIONS ARE OUT TO OUT.
D = PIN DIAMETER.

BENT BAR DETAILS

FLUME DATA

∡ A = 18°26'
∡ C = 1°00'
B = 10'-6 5/16
S =
V = 3'-1 15/16
W =
M = 3'-0
T = 0'-11
H = 4'-0

CURVE DATA

C. L. =
L2 =
L3 = 20'-0 5/16
D = 10'-1/2
E = 9'-11 13/16
P. C. ELEV. =
P. I. ELEV. =
P. P. ELEV. =
P. T. ELEV. =
X1 = 3'-1 13/16
X2 = 1'-9 1/4
X3 = 0'-9 1/2
X4 = 0'-2 3/8
L3/4 = 5'-1/16(+)

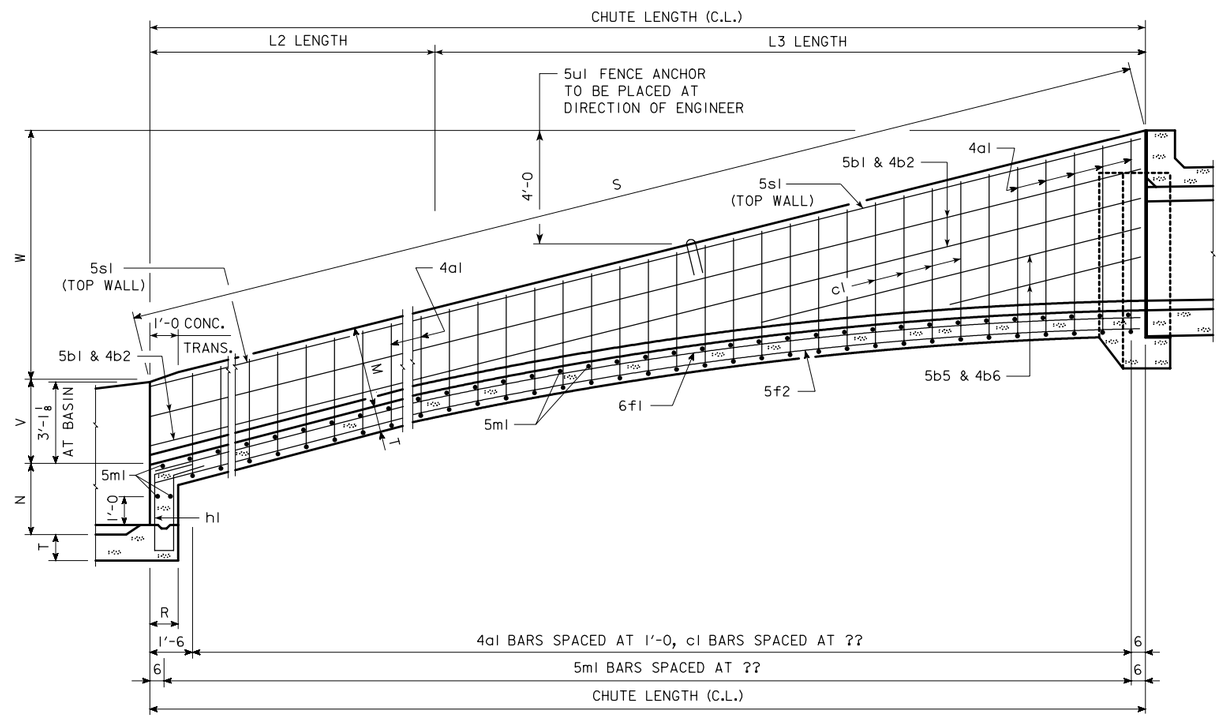

?'x4' FLUME CHUTE - LONGITUDINAL SECTION

CONCRETE PLACEMENT QUANTITIES

LOCATION	FOOTING	WALLS	TOTAL
FLUME			
JUNCTION BELL			
BASIN			
TOTAL (CU. YDS.)			

NOTE:
SEE STANDARD RCF-01-04 FOR FLUME INFORMATION AND DETAILS NOT SHOWN.

SEE STANDARD FBJ-0?-04 FOR BELL JOINT INFORMATION AND DETAILS NOT SHOWN.

SEE STANDARD RCFB-01-04 FOR FLUME BASIN INFORMATION AND DETAILS NOT SHOWN.

IOWA DEPARTMENT OF TRANSPORTATION - HIGHWAY DIVISION
DESIGN SHEET NO. ____ OF ____ FILE NO. _____ DESIGN NO. _____

CORRECTION 04-09 - NOTE FOR LAPPING BARS OVER 40'-0 LONG CHANGED.
HE1071.S01 - THIS SHEET ISSUED 09-03.

REINFORCING BAR LIST - FLUME

BAR	LOCATION	SHAPE	NO.	LENGTH	WEIGHT
4a1	WALLS FFV	I		LISTED	
5b1	WALLS FFH	╲	6		
4b2	WALLS BFH	╲	6		
5b5	WALLS FFH	╲	4	LISTED	
4b6	WALLS BFH	╲	4	LISTED	
?c1	BOTT. FLOOR & WALLS BFV	⌴		LISTED	
?c2	BOTT. FLOOR & WALLS BFV - SPLICED	⌴			
5c3	WALLS BFV	I		LISTED	
6f1	FLOOR LONGIT. TOP	╲			
5f2	FLOOR LONGIT. BOTT.	╲			
5m1	FLOOR TRANSV. TOP	—			
5s1	WALLS BOTH F ALONG SLOPE	╲	4		
5u1	FENCE ANCHORS (GALVANIZED)	⊃	2	3'-1	6
			TOTAL (LBS.)		

WEIGHT OF BARS OVER 40'-0 LONG INCLUDE AN ALLOWANCE FOR A 2'-2 LAP BUT LENGTHS SHOWN FOR BARS OVER 40'-0 LONG DO NOT INCLUDE THE LAP.

LISTED BARS

BAR 4a1
? BARS
? AT ?
? VAR. - 2 EA. LGTH.

BAR ?c1
? BARS
? AT ?
? VAR.

BAR 5b5 AND 4b6
4 BARS - 2 EA. LGTH.

BAR 5c3
? BARS
? AT ?
? VAR. - 2 EA. LGTH.

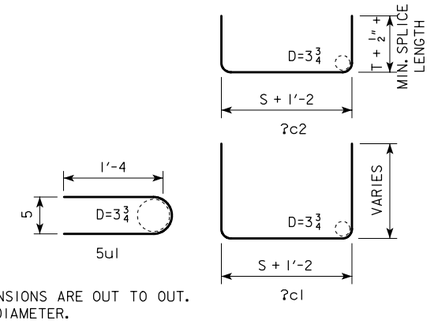

NOTE:
ALL DIMENSIONS ARE OUT TO OUT.
D = PIN DIAMETER.

BENT BAR DETAILS

FLUME DATA

∡ A = 18°26'
∡ C = 1°00'
B = 11'-2 11/16
S =
V = 3'-11 3/8
W =
M = 3'-9
T = 0'-11
H = 5'-0

CURVE DATA

C. L. =
L2 =
L3 = 21'-4 3/16
D = 10'-8 7/16
E = 10'-7 3/4
P. C. ELEV. =
P. I. ELEV. =
P. P. ELEV. =
P. T. ELEV. =
X1 = 3'-4 5/16
X2 = 1'-10 11/16
X3 = 0'-10 1/16
X4 = 0'-2 1/2
L3/4 = 5'-4 1/16

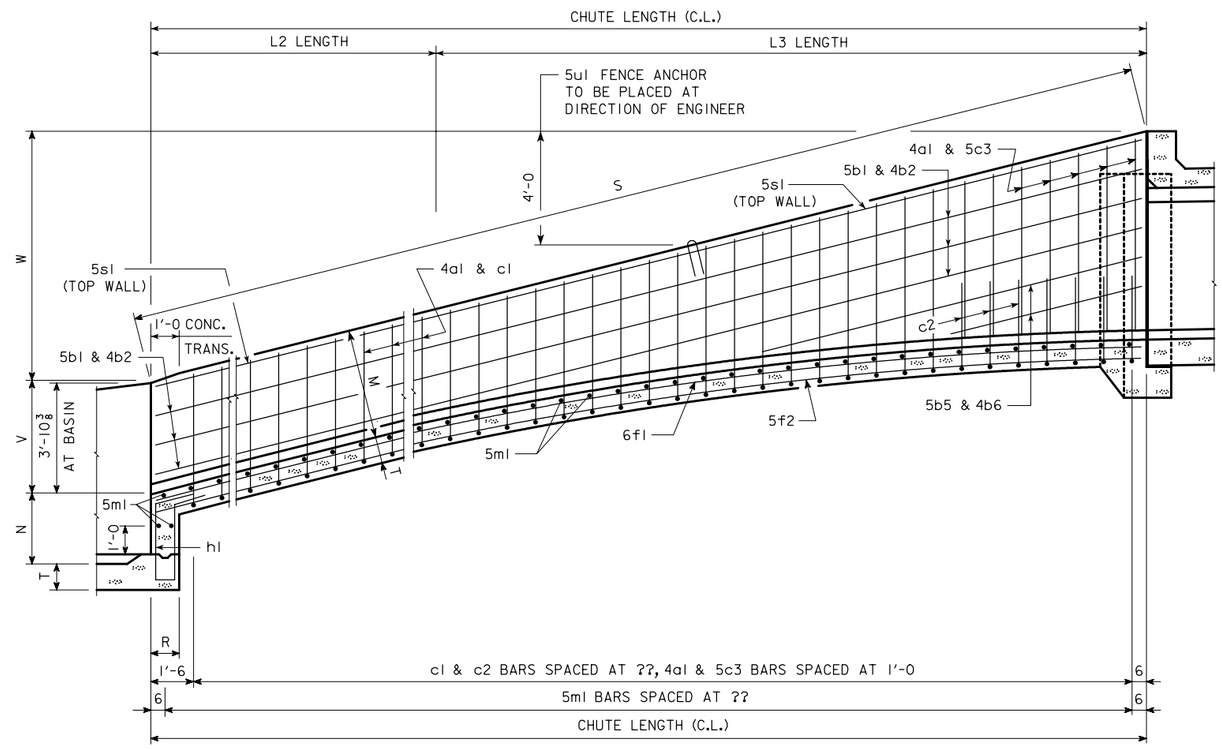

?'x5' FLUME CHUTE - LONGITUDINAL SECTION

NOTE:
SEE STANDARD RCF-01-04 FOR FLUME INFORMATION AND DETAILS NOT SHOWN.

SEE STANDARD FBJ-0?-04 FOR BELL JOINT INFORMATION AND DETAILS NOT SHOWN.

SEE STANDARD RCFB-0?-04 FOR FLUME BASIN INFORMATION AND DETAILS NOT SHOWN.

CONCRETE PLACEMENT QUANTITIES

LOCATION	FOOTING	WALLS	TOTAL
FLUME			
JUNCTION BELL			
BASIN			
TOTAL (CU. YDS.)			

IOWA DEPARTMENT OF TRANSPORTATION - HIGHWAY DIVISION
DESIGN SHEET NO. ____ OF ____ FILE NO. _____ DESIGN NO. _____

DESIGN TEAM	FLUME CHUTE DETAILS - 5' HEIGHT	STANDARD SHEET 1072	COUNTY	PROJECT NUMBER	SHEET NUMBER

CORRECTION 04-09 - NOTE FOR LAPPING BARS OVER 40'-0 LONG CHANGED.
HE1072.S01 - THIS SHEET ISSUED 09-03.

REINFORCING BAR LIST - FLUME

BAR	LOCATION	SHAPE	NO.	LENGTH	WEIGHT
4a1	WALLS FFV	I		LISTED	
5b1	WALLS FFH	╲	6		
4b2	WALLS BFH	╲	6		
5b5	WALLS FFH	╲	6	LISTED	
4b6	WALLS BFH	╲	6	LISTED	
?c1	BOTT. FLOOR & WALLS BFV	⊔		LISTED	
?c2	BOTT. FLOOR & WALLS BFV - SPLICED	⊔			
5c3	WALLS BFV	I		LISTED	
6f1	FLOOR LONGIT. TOP	╲			
5f2	FLOOR LONGIT. BOTT.	╲			
5m1	FLOOR TRANSV. TOP	—			
6s1	WALLS BOTH F ALONG SLOPE	╲	4		
5u1	FENCE ANCHORS (GALVANIZED)	⊃	2	3'-1	6
			TOTAL (LBS.)		

WEIGHT OF BARS OVER 40'-0 LONG INCLUDES AN ALLOWANCE FOR LAP (2'-8 FOR 6s BARS AND 2'-2 FOR ALL OTHER BARS) BUT LENGTHS SHOWN FOR BARS OVER 40'-0 LONG DO NOT INCLUDE LAPS.

LISTED BARS

BAR 4a1
? BARS
? AT ?
? VAR. - 2 EA. LGTH.

BAR ?c1
? BARS
? AT ?
? VAR.

BAR 5b5 AND 4b6
6 BARS - 2 EA. LGTH.

BAR 5c3
? BARS
? AT ?
? VAR. - 2 EA. LGTH.

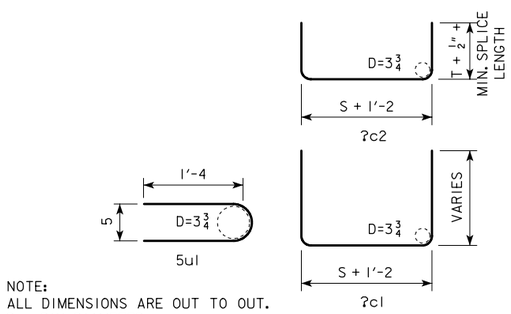

NOTE:
ALL DIMENSIONS ARE OUT TO OUT.
D = PIN DIAMETER.

BENT BAR DETAILS

FLUME DATA

∡ A = 18°26'
∡ C = 1°00'
B = 11'-11
S =
V = 4'-8 7/8
W =
M = 4'-6
T = 0'-11
H = 6'-0

CURVE DATA

C. L. =
L2 =
L3 = 22'-8 1/16
D = 11'-4 7/16
E = 11'-3 11/16
P. C. ELEV. =
P. I. ELEV. =
P. P. ELEV. =
P. T. ELEV. =
X1 = 3'-6 13/16
X2 = 2'-1/8
X3 = 0'-10 11/16
X4 = 0'-2 5/8
L3/4 = 5'-8(+)

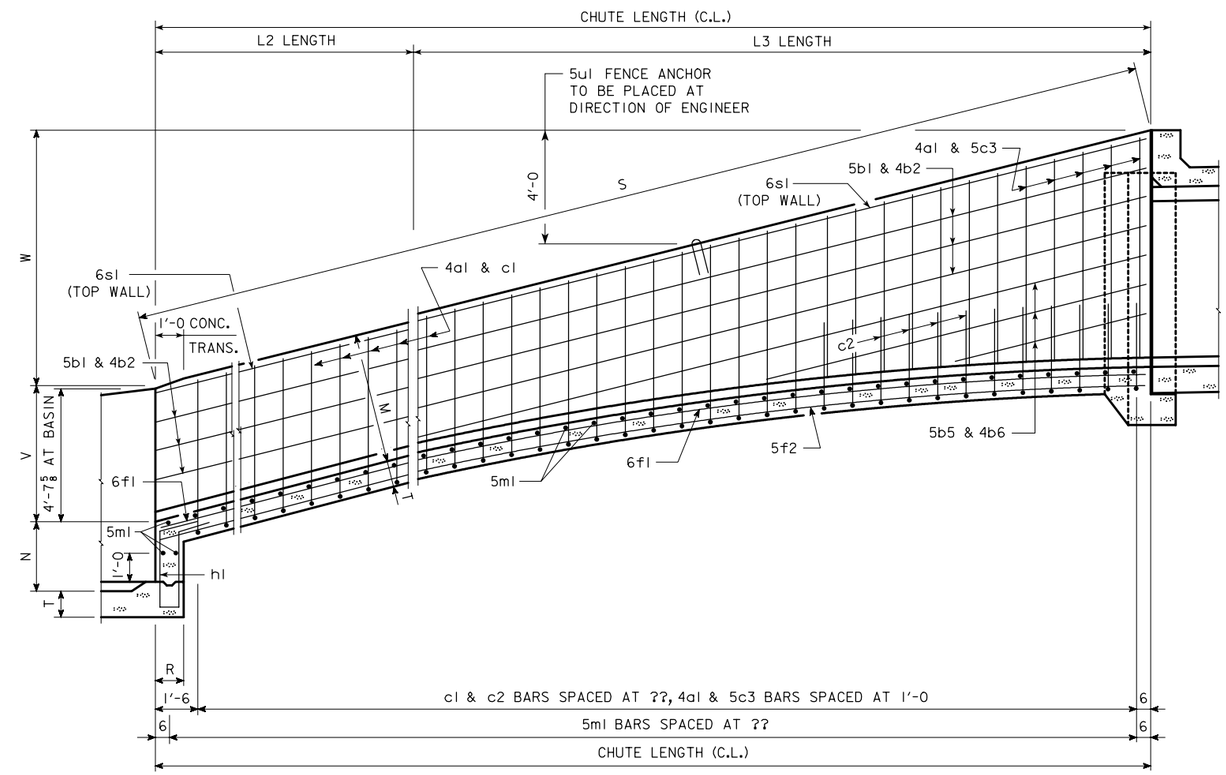

?'x6' FLUME CHUTE - LONGITUDINAL SECTION

CONCRETE PLACEMENT QUANTITIES

LOCATION	FOOTING	WALLS	TOTAL
FLUME			
JUNCTION BELL			
BASIN			
TOTAL (CU. YDS.)			

NOTE:
SEE STANDARD RCF-01-04 FOR FLUME INFORMATION AND DETAILS NOT SHOWN.

SEE STANDARD FBJ-0?-04 FOR BELL JOINT INFORMATION AND DETAILS NOT SHOWN.

SEE STANDARD RCFB-0?-04 FOR FLUME BASIN INFORMATION AND DETAILS NOT SHOWN.

IOWA DEPARTMENT OF TRANSPORTATION - HIGHWAY DIVISION
DESIGN SHEET NO. ____ OF ____ FILE NO. _____ DESIGN NO. _____

CORRECTION 04-09 - NOTE FOR LAPPING BARS OVER 40'-0 LONG CHANGED.
HE1073.S01 - THIS SHEET ISSUED 09-03.

REINFORCING BAR LIST - FLUME

BAR	LOCATION	SHAPE	NO.	LENGTH	WEIGHT
4a1	WALLS FFV	I		LISTED	
5b1	WALLS FFH	╲	10		
4b2	WALLS BFH	╲	10		
5b5	WALLS FFH	╲	6	LISTED	
4b6	WALLS BFH	╲	6	LISTED	
?c2	BOTT. FLOOR & WALLS BFV - SPLICED	⊔			
5c3	WALLS BFV	I		LISTED	
6f1	FLOOR LONGIT. TOP	╲			
5f2	FLOOR LONGIT. BOTT.	╲			
5m1	FLOOR TRANSV. TOP	—			
6s1	WALLS BOTH F ALONG SLOPE	╲	4		
5u1	FENCE ANCHORS (GALVANIZED)	⊃	2	3'-1	6
			TOTAL (LBS.)		

WEIGHT OF BARS OVER 40'-0 LONG INCLUDES AN ALLOWANCE FOR LAP (2'-8 FOR 6s BARS AND 2'-2 FOR ALL OTHER BARS) BUT LENGTHS SHOWN FOR BARS OVER 40'-0 LONG DO NOT INCLUDE LAPS.

LISTED BARS

BAR 4a1
? BARS
? AT ?
? VAR. - 2 EA. LGTH.

BAR 5c3
? BARS
? AT ?
? VAR. - 2 EA. LGTH.

BAR 5b5 AND 4b6
6 BARS - 2 EA. LGTH.

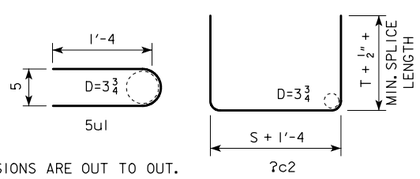

NOTE:
ALL DIMENSIONS ARE OUT TO OUT.
D = PIN DIAMETER.

BENT BAR DETAILS

FLUME DATA

∡ A = 18°26'
∡ C = 1°00'
B = 13'-3 11/16
S =
V = 6'-3 13/16
W =
M = 6'-0
T = 0'-11
H = 8'-0

CURVE DATA

C. L. =
L2 =
L3 = 25'-3 13/16
D = 12'-8 5/16
E = 12'-7 1/2
P. C. ELEV. =
P. I. ELEV. =
P. P. ELEV. =
P. T. ELEV. =
X1 = 3'-11 7/8
X2 = 2'-2 7/8
X3 = 1'-0
X4 = 0'-3
L3/4 = 6'-3 15/16(+)

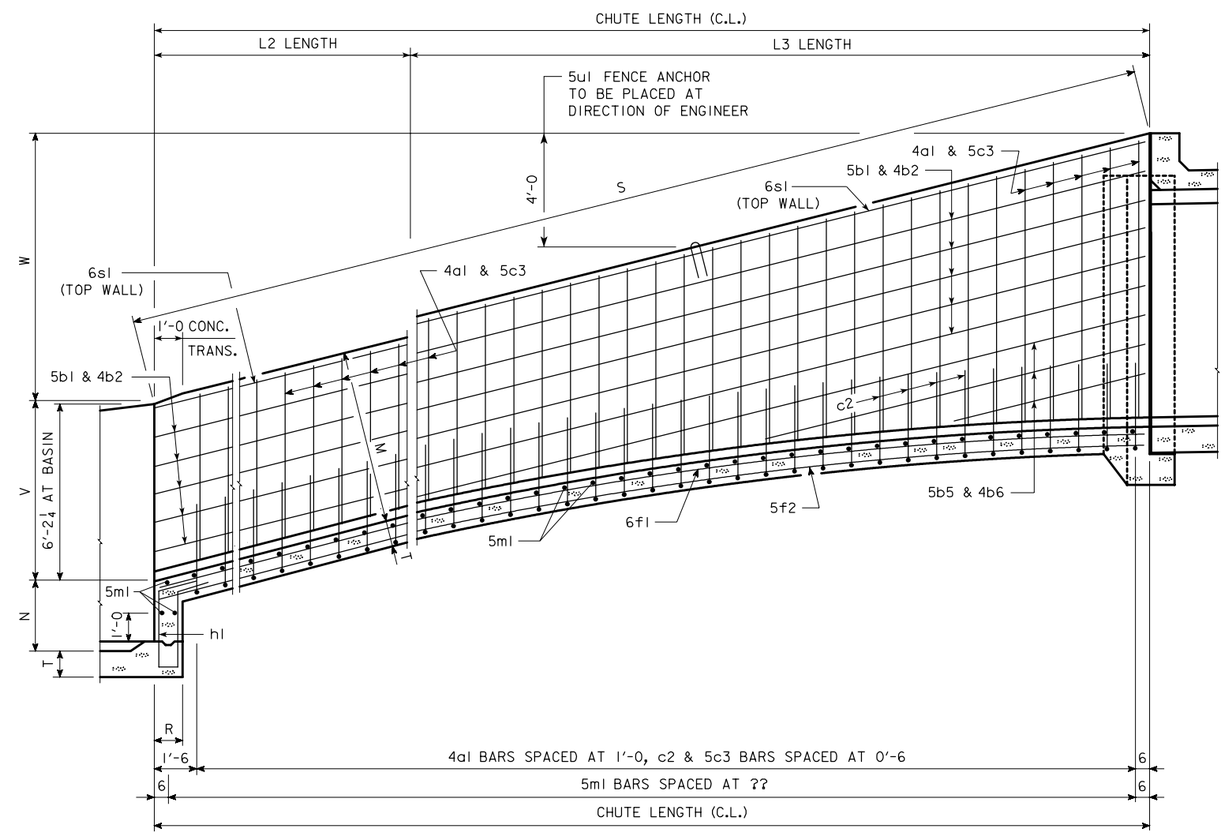

?'x8' FLUME CHUTE - LONGITUDINAL SECTION

CONCRETE PLACEMENT QUANTITIES			
LOCATION	FOOTING	WALLS	TOTAL
FLUME			
JUNCTION BELL			
BASIN			
TOTAL (CU. YDS.)			

NOTE:
SEE STANDARD RCF-01-04 FOR FLUME INFORMATION AND DETAILS NOT SHOWN.

SEE STANDARD FBJ-0?-04 FOR BELL JOINT INFORMATION AND DETAILS NOT SHOWN.

SEE STANDARD RCFB-0?-04 FOR FLUME BASIN INFORMATION AND DETAILS NOT SHOWN.

IOWA DEPARTMENT OF TRANSPORTATION - HIGHWAY DIVISION
DESIGN SHEET NO. ____ OF ____ FILE NO. _____ DESIGN NO. _____

CORRECTION 04-09 - NOTE FOR LAPPING BARS OVER 40'-0 LONG CHANGED.
HE1074.S01 - THIS SHEET ISSUED 09-03.

DESIGN TEAM	FLUME CHUTE DETAILS - 8' HEIGHT	STANDARD SHEET 1074	COUNTY	PROJECT NUMBER	SHEET NUMBER

REINFORCING BAR LIST - FLUME

BAR	LOCATION	SHAPE	NO.	LENGTH	WEIGHT
4a1	WALLS FFV	1		LISTED	
5b1	WALLS FFH	╲	12		
4b2	WALLS BFH	╲	12		
5b5	WALLS FFH	╲	8	LISTED	
4b6	WALLS BFH	╲	8	LISTED	
?c2	BOTT. FLOOR & WALLS BFV - SPLICED	⊔			
7c3	WALLS BFV	1		LISTED	
6f1	FLOOR LONGIT. TOP	╲			
5f2	FLOOR LONGIT. BOTT.	╲			
5m1	FLOOR TRANSV. TOP	—			
6s1	WALLS BOTH F ALONG SLOPE	╲	4		
5u1	FENCE ANCHORS (GALVANIZED)	⊃	2	3'-1	6
			TOTAL (LBS.)		

WEIGHT OF BARS OVER 40'-0 LONG INCLUDES AN ALLOWANCE FOR LAP (2'-8 FOR 6s BARS AND 2'-2 FOR ALL OTHER BARS) BUT LENGTHS SHOWN FOR BARS OVER 40'-0 LONG DO NOT INCLUDE LAPS.

LISTED BARS

BAR 4a1
? BARS
? AT ?
? VAR. - 2 EA. LGTH.

BAR 7c3
? BARS
? AT ?
? VAR. - 2 EA. LGTH.

BAR 5b5 AND 4b6
8 BARS - 2 EA. LGTH.

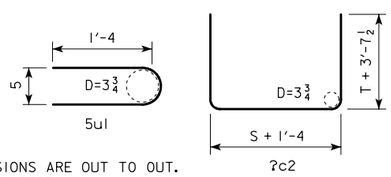

NOTE:
ALL DIMENSIONS ARE OUT TO OUT.
D = PIN DIAMETER.

BENT BAR DETAILS

FLUME DATA

∡ A = 18°26'
∡ C = 1°00'
B = 14'-8 3/8
S =
V = 7'-10 7/8
W =
M = 7'-6
T = 0'-11
H = 10'-0

CURVE DATA

C. L. =
L2 =
L3 = 27'-11 5/8
D = 14'-0 1/4
E = 13'-11 5/16
P. C. ELEV. =
P. I. ELEV. =
P. P. ELEV. =
P. T. ELEV. =
X1 = 4'-4 13/16
X2 = 2'-5 3/4
X3 = 1'-1 3/16
X4 = 0'-3 3/8
L3/4 = 6'-11 7/8(+)

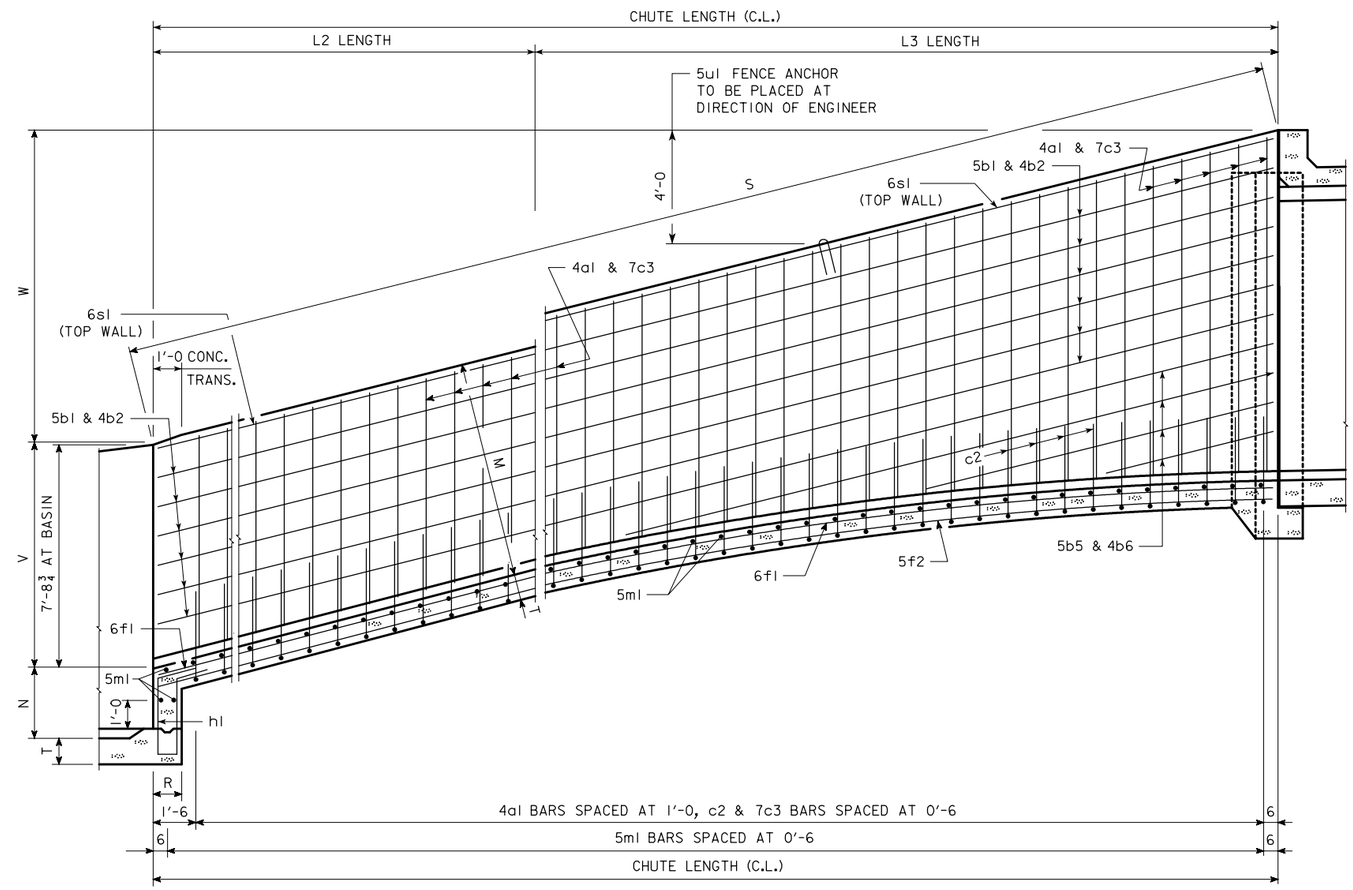

?'x10' FLUME CHUTE - LONGITUDINAL SECTION

NOTE:
SEE STANDARD RCF-01-04 FOR FLUME INFORMATION AND DETAILS NOT SHOWN.

SEE STANDARD FBJ-0?-04 FOR BELL JOINT INFORMATION AND DETAILS NOT SHOWN.

SEE STANDARD RCFB-0?-04 FOR FLUME BASIN INFORMATION AND DETAILS NOT SHOWN.

CONCRETE PLACEMENT QUANTITIES

LOCATION	FOOTING	WALLS	TOTAL
FLUME			
JUNCTION BELL			
BASIN			
TOTAL (CU. YDS.)			

IOWA DEPARTMENT OF TRANSPORTATION - HIGHWAY DIVISION
DESIGN SHEET NO. ____ OF ____ FILE NO. _____ DESIGN NO. _____

CORRECTION 04-09 - NOTE FOR LAPPING BARS OVER 40'-0 LONG CHANGED.
HE1075.S01 - THIS SHEET ISSUED 09-03.

DESIGN TEAM	FLUME CHUTE DETAILS - 10' HEIGHT	STANDARD SHEET 1075	COUNTY	PROJECT NUMBER	SHEET NUMBER

REINFORCING BAR LIST - FLUME

BAR	LOCATION	SHAPE	NO.	LENGTH	WEIGHT
4a1	WALLS FFV	I		LISTED	
5b1	WALLS FFH	╲	16		
4b2	WALLS BFH	╲	16		
5b5	WALLS FFH	╲	8	LISTED	
4b6	WALLS BFH	╲	8	LISTED	
7c2	BOTT. FLOOR & WALLS BFV - SPLICED	⌴			
7c3	WALLS BFV	I		LISTED	
6f1	FLOOR LONGIT. TOP	╲			
5f2	FLOOR LONGIT. BOTT.	╲			
5m1	FLOOR TRANSV. TOP	—			
6s1	WALLS BOTH F ALONG SLOPE	╲	4		
5u1	FENCE ANCHORS (GALVANIZED)	⊃	2	3'-1	6
			TOTAL (LBS.)		

WEIGHT OF BARS OVER 40'-0 LONG INCLUDES AN ALLOWANCE FOR LAP (2'-8 FOR 6s BARS AND 2'-2 FOR ALL OTHER BARS) BUT LENGTHS SHOWN FOR BARS OVER 40'-0 LONG DO NOT INCLUDE LAPS.

LISTED BARS

BAR 4a1
? BARS
? AT ?
? VAR. - 2 EA. LGTH.

BAR 7c3
? BARS
? AT ?
? VAR. - 2 EA. LGTH.

BAR 5b5 AND 4b6
8 BARS - 2 EA. LGTH.

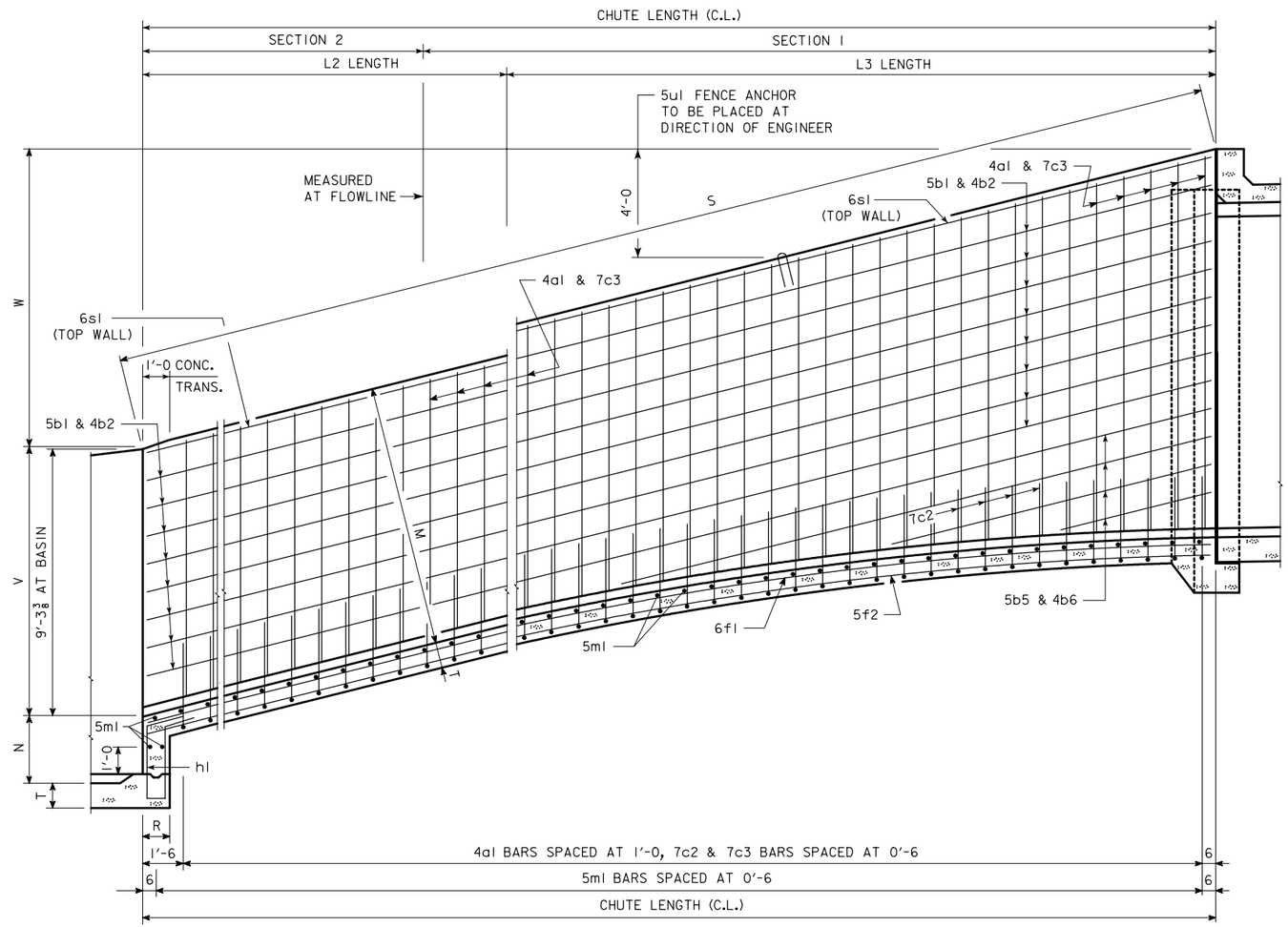

?'x12' FLUME CHUTE - LONGITUDINAL SECTION

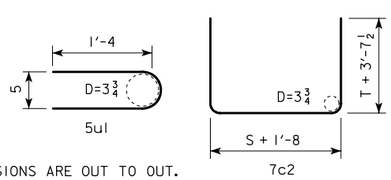

NOTE:
ALL DIMENSIONS ARE OUT TO OUT.
D = PIN DIAMETER.

BENT BAR DETAILS

FLUME DATA

∡ A = 18°26'
∡ C = 1°00'
B = 16'-1 1/16
S =
V = 9'-5 7/8
W =
M = 9'-0
T = 1'-1
H = 12'-0

CURVE DATA

C. L. =
L2 =
L3 = 30'-7 3/8
D = 15'-4 3/16
E = 15'-3 3/16
P. C. ELEV. =
P. I. ELEV. =
P. P. ELEV. =
P. T. ELEV. =
X1 = 4'-9 13/16
X2 = 2'-8 1/2
X3 = 1'-2 1/2
X4 = 0'-3 5/8
L3/4 = 7'-7 13/16(+)

CONCRETE PLACEMENT QUANTITIES

LOCATION	FOOTING	WALLS	TOTAL
FLUME			
JUNCTION BELL			
BASIN			
TOTAL (CU. YDS.)			

NOTE:
SEE STANDARD RCF-01-04 FOR FLUME INFORMATION AND DETAILS NOT SHOWN.

SEE STANDARD FBJ-0?-04 FOR BELL JOINT INFORMATION AND DETAILS NOT SHOWN.

SEE STANDARD RCFB-03-04 FOR FLUME BASIN INFORMATION AND DETAILS NOT SHOWN.

IOWA DEPARTMENT OF TRANSPORTATION - HIGHWAY DIVISION
DESIGN SHEET NO. ____ OF ____ FILE NO. _____ DESIGN NO. _____

CORRECTION 04-09 - NOTE FOR LAPPING BARS OVER 40'-0 LONG CHANGED.
HE1076.SOI - THIS SHEET ISSUED 09-03.