Iowa Department
of Transportation
Highway Division

TWIN REINFORCED CONCRETE BOX CULVERT STANDARDS

GENERAL NOTES :

1. THE RCB CULVERT SECTIONS ARE DESIGNED FOR HS20-44 LIVE LOAD AND EARTH FILLS OF VARYING HEIGHTS.
2. FOR VERTICAL LOADS THE WEIGHT OF EARTH IS ASSUMED AS 140 pcf. Z = 170 FOR CRACK CONTROL
3. LATERAL EARTH LOADS EQUIVALENT FLUID PRESSURE IS ASSUMED AS 36 psf/FT.
4. METAL BAR CHAIRS SPACED AT NOT OVER 3'-0 C-C IN EITHER DIRECTION ARE TO BE USED TO SUPPORT ALL SLAB AND FLOOR STEEL AS OUTLINED IN THE STANDARD SPECIFICATIONS (ARTICLE 2404.07).
5. THE CLEAR DISTANCE FROM FACE OF CONCRETE TO NEAR EDGE OR END OF REINFORCING BAR TO BE 2" UNLESS OTHERWISE NOTED.
6. LONGITUDINAL REINFORCING IS NOT TO EXTEND THRU THE CONSTRUCTION JOINTS, EXCEPT FOR 5r1 DOWEL BARS IN SLAB.
7. ALL REINFORCING STEEL IS TO BE SECURELY WIRED IN PLACE BEFORE THE CONCRETE IS POURED ACCORDING TO ARTICLE 2404.03, D, OF THE STANDARD SPECIFICATIONS.
8. FLOOR OF BARREL IS TO BE FINISHED SMOOTH. SIDES OF FOOTING ARE TO BE FORMED TO INSURE CORRECT LINE AND GRADE.
9. ALL EXPOSED CORNERS 90° OR SHARPER TO BE FILLETED WITH A $\frac{3}{4}$" DRESSED AND BEVELED STRIP.
10. THE PERMISSIBLE CONSTRUCTION JOINT AT THE TOP OF THE WALLS MAY BE LOWERED AT THE CONTRACTOR'S OPTION WITH ENGINEER'S APPROVAL.
11. THE REINFORCEMENT SUPPLIED FOR THIS STRUCTURE SHALL BE GRADE 60 REINFORCEMENT IN ACCORDANCE WITH THE STANDARD SPECIFICATIONS. THE DESIGN STRESSES ARE BASED ON 60 GRADE REINFORCEMENT.
12. THE VERTICAL BARS IN THE WALLS MAY BE SPLICED ABOVE THE FOOTING AT THE CONTRACTOR'S OPTION AS FOLLOWS:

BAR SIZE NUMBER	4	5	6	7	8
MINIMUM SPLICE LENGTH	21"	26"	31"	43"	55"

THIS SPLICE, IF USED, WILL BE AT THE CONTRACTOR'S EXPENSE.
13. REBAR CLEARANCES WILL BE AS FOLLOWS:
    - VERTICAL, TOP 2"
    - VERTICAL, BOTTOM 3", OR $3\frac{1}{2}$" IF THE OVERALL HEIGHT OF THE CULVERT IS NOT TO A FULL INCH
    - TRANSVERSE 2"
    - EDGE CLEARANCES 2" EXCEPT, TOP OF FLOOR $2\frac{1}{4}$" TO NEAR TRANSVERSE REINF BAR OR BOTTOM OF FLOOR $3\frac{1}{2}$" TO NEAR TRANSVERSE REINF BAR.
14. ALL CONSTRUCTION JOINTS SHALL BE FORMED WITH A BEVELED KEYWAY EXCEPT AT BELL JOINTS.

    KEYWAY DIMENSIONS SHOWN ON THE PLANS ARE BASED ON NOMINAL DIMENSIONS UNLESS STATED OTHERWISE. IN ADDITION, THE BEVEL USED ON THE KEYWAY SHALL BE LIMITED TO A MAXIMUM OF 10 DEGREES FROM VERTICAL.

    ALL BEVELED KEYWAYS SHALL BE CENTERED.

    KEYWAY SIZE SHALL BE 2x4 EXCEPT AS FOLLOWS :
    KEYWAY BETWEEN THE FLOOR AND WALL SHALL BE 2x6 WHEN THE WALL IS GREATER THAN 10 INCHES WIDE.
15. IF 0' OF FILL IS SPECIFIED, DETAILS FOR PAVING NOTCH AND REFERENCE TO EPOXY COATING OF SLAB REINFORCING STEEL, IF APPLICABLE, SHALL BE INCLUDED IN THE FINAL PLANS.

INDEX FOR CULVERT STANDARDS :

TWRCB 8-6-87	CULVERT BARREL DETAILS, VARIABLE DIMENSIONS AND QUANTITIES TABLE - 8' SPAN.
TWRCB 8-8-87	CULVERT BARREL DETAILS, VARIABLE DIMENSIONS AND QUANTITIES TABLE - 8' SPAN.
TWRCB 8-10-87	CULVERT BARREL DETAILS, VARIABLE DIMENSIONS AND QUANTITIES TABLE - 8' SPAN.
TWRCB 10-6-87	CULVERT BARREL DETAILS, VARIABLE DIMENSIONS AND QUANTITIES TABLE - 10' SPAN.
TWRCB 10-8-87	CULVERT BARREL DETAILS, VARIABLE DIMENSIONS AND QUANTITIES TABLE - 10' SPAN.
TWRCB 10-10-87	CULVERT BARREL DETAILS, VARIABLE DIMENSIONS AND QUANTITIES TABLE - 10' SPAN.
TWRCB 10-12-87	CULVERT BARREL DETAILS, VARIABLE DIMENSIONS AND QUANTITIES TABLE - 10' SPAN.
TWRCB 12-6-87	CULVERT BARREL DETAILS, VARIABLE DIMENSIONS AND QUANTITIES TABLE - 12' SPAN.
TWRCB 12-8-87	CULVERT BARREL DETAILS, VARIABLE DIMENSIONS AND QUANTITIES TABLE - 12' SPAN.
TWRCB 12-10-87	CULVERT BARREL DETAILS, VARIABLE DIMENSIONS AND QUANTITIES TABLE - 12' SPAN.
TWRCB 12-12-87	CULVERT BARREL DETAILS, VARIABLE DIMENSIONS AND QUANTITIES TABLE - 12' SPAN.
TWH 0-1-87	DIMENSION TABLE.
TWH 0-2-87	CURTAIN WALL DETAILS AND PLAN VIEW - APRON REINFORCING, TOP & BOTTOM.
TWH 0-3-87	TYPICAL VIEW - FRONT & BACK FACE REINFORCING, WINGWALLS, CENTER WALL. TYPICAL SECTION - NEAR CENTER OF APRON, TOP OF WINGWALL DETAILS AND SECTION THRU PARAPET.
TWH 0-4-87	BENT BAR DETAILS AND BILL OF REINFORCING FOR ONE HEADWALL, 0° SKEW - 12', 10' & 8' SPANS.
TWH 15-1-87	DIMENSION TABLE.
TWH 15-2-87	PLAN VIEW - APRON REINFORCING TOP & BOTTOM.
TWH 15-3-87	TYPICAL SECTION - NEAR CENTER OF APRON, SECTION THRU PARAPET, TOP OF WINGWALL DETAILS AND CURTAIN WALL DETAILS.
TWH 15-4-87	TYPICAL VIEWS - FRONT & BACK FACE REINFORCING, SHORT & LONG WINGWALL, CENTER WINGWALL.
TWH 15-5-87	BENT BAR DETAILS AND BILL OF REINFORCING FOR ONE HEADWALL, 15° SKEW - 12', 10' & 8' SPANS.
TWH 30-1-87	DIMENSION TABLE.
TWH 30-2-87	PLAN VIEW - APRON REINFORCING TOP & BOTTOM.
TWH 30-3-87	TYPICAL SECTION - NEAR CENTER OF APRON, SECTION THRU PARAPET, TOP OF WINGWALL DETAILS AND CURTAIN WALL DETAILS.
TWH 30-4-87	TYPICAL VIEWS - FRONT & BACK FACE REINFORCING, SHORT & LONG WINGWALL, CENTER WINGWALL.
TWH 30-5-87	BENT BAR DETAILS AND BILL OF REINFORCING FOR ONE HEADWALL, 30° SKEW - 12', 10' & 8' SPANS.
TWH 45-1-87	DIMENSION TABLE.
TWH 45-2-87	PLAN VIEW - TOP OF APRON REINFORCING.
TWH 45-3-87	PLAN VIEW - BOTTOM OF APRON REINFORCING.
TWH 45-4-87	TYPICAL SECTION - NEAR CENTER OF APRON, SECTION THRU PARAPET, TOP OF WINGWALL DETAILS AND CURTAIN WALL DETAILS.
TWH 45-5-87	TYPICAL VIEWS - FRONT & BACK FACE REINFORCING, SHORT & LONG WINGWALL, CENTER WINGWALL.
TWH 45-6-87	BENT BAR DETAILS AND BILL OF REINFORCING FOR ONE HEADWALL, 45° SKEW - 12', 10' & 8' SPANS.
TWCBJ 1-87	CULVERT BELL JOINT DETAILS AND ESTIMATE OF QUANTITIES TABLE - 8' SPAN.
TWCBJ 2-87	CULVERT BELL JOINT DETAILS AND ESTIMATE OF QUANTITIES TABLE - 10' & 12' SPANS.
TWCBJ 3-87	PERMISSIBLE CULVERT BELL JOINT DETAILS.

SPECIFICATIONS :

DESIGN: AASHTO SERIES OF 1983, EXCEPT AS MODIFIED IN "GENERAL NOTES 2 & 3" ABOVE.
CONSTRUCTION: STANDARD SPECIFICATIONS OF THE IOWA DEPARTMENT OF TRANSPORTATION SPECIFICATION, CURRENT SERIES, PLUS CURRENT SUPPLEMENTAL SPECIFICATIONS AND SPECIAL PROVISIONS.

DESIGN STRESSES :

DESIGN STRESSES FOR THE FOLLOWING MATERIALS ARE IN ACCORDANCE WITH THE AASHTO STANDARD SPECIFICATIONS FOR HIGHWAY BRIDGES, SERIES OF 1983:
REINFORCING STEEL IN ACCORDANCE WITH SECTION 8, GRADE 60.
CONCRETE IN ACCORDANCE WITH SECTION 8, f'c = 3,500 PSI.

LATEST REVISION DATE : 08-10

APPROVED BY :

STANDARD DESIGN

GENERAL INFORMATION
FOR
TWIN REINFORCED CONCRETE BOX CULVERTS

IOWA DEPARTMENT OF TRANSPORTATION - HIGHWAY DIVISION

JULY , 1987

TWRCB-G1-87

CORRECTION 08-10 - ARTICLE 2404.06 CHANGED TO 2404.03, D IN GENERAL NOTES.
ENGLISHSIGNTWINCULVERTS.DGN - TWRCB-G1-87

VARIABLE DIMENSIONS AND QUANTITIES FOR BARREL SECTIONS

BAR LIST

FILL	a1 SIZE	a1 SP	a1 LENGTH	a2 SIZE	a2 SP	a2 LENGTH	b1 SIZE	b1 SP	b1 NO.	b2 SIZE	b2 SP	b2 NO.	e1 SIZE	e1 SP	e1 NO.	e2 SIZE	e2 SP	e2 NO.	f1 SIZE	f1 SP	f1 NO.	f2 SIZE	f2 SP	f2 NO.
0	4	9	7'-7	5	4.5	7'-7	4	9	16	4	9	9	5	12	14	4	18	14	4	12	18	4	18	14
1	4	9	7'-7	5	4.5	7'-7	4	9	16	4	9	9	5	12	14	4	18	14	4	12	18	4	18	14
2	4	12	7'-7	4	4.5	7'-7	4	9	16	4	9	9	5	12	14	4	18	14	4	12	18	4	18	14
3	5	12	7'-5	4	4.5	7'-5	4	9	16	4	9	9	5	12	14	4	18	14	4	12	18	4	18	14
4	4	9	7'-5	4	4.5	7'-5	4	9	16	4	9	9	5	12	14	4	18	14	4	12	18	4	18	14
5-7	5	12	7'-5	4	4.5	7'-5	4	9	16	4	9	9	5	12	14	4	18	14	4	12	18	4	18	14
8-10	4	6	7'-5	4	4.5	7'-5	4	9	16	4	9	9	5	12	14	4	18	14	4	12	18	4	18	14
11-13	4	9	7'-5	4	4.5	7'-5	4	9	16	4	9	9	5	12	14	4	18	14	4	12	18	4	18	14
14-16	4	9	7'-7	4	4.5	7'-7	4	9	16	4	9	9	5	12	14	4	18	14	4	12	18	4	18	14
17-19	4	9	7'-9	4	4.5	7'-9	4	9	16	4	9	9	5	12	14	4	18	14	4	12	18	4	18	14
20-22	4	9	7'-11	4	4.5	7'-11	4	9	16	4	9	9	5	12	14	4	18	14	4	12	18	4	18	14
23-25	4	9	8'-1	4	4.5	8'-1	4	9	16	4	9	9	5	12	14	4	18	14	4	12	18	4	18	14

FILL	k1 SIZE	k1 SP	k1 LENGTH	k2 SIZE	k2 SP	k2 LENGTH	k4 SIZE	k4 SP	k4 LENGTH	k4 h	k4 v	k5 SIZE	k5 SP	k5 LENGTH	k5 h	k5 v	k6 SIZE	k6 SP	k6 LENGTH	k7 SIZE	k7 SP	k7 LENGTH	k9 SIZE	k9 SP*	k9 LENGTH	m1 SIZE	m1 SP	m1 LENGTH	m2 SIZE	m2 SP	m2 LENGTH
0	5	15	17'-11	5	15	7'-0	4	12	4'-10	1'-8	3'-2	4	12	4'-10	1'-8	3'-2	4	15	17'-11	4	15	4'-8	4	7.5	17'-11	4	12	18'-5	4	12	5'-1
1	5	15	17'-11	5	15	7'-1	4	12	4'-10	1'-8	3'-2	4	12	4'-10	1'-8	3'-2	4	15	15'-6	4	15	4'-5	4	7.5	17'-11	4	12	18'-5	4	12	5'-4
2	5	12	7'-7	5	12	4'-9	5	12	4'-10	1'-9	3'-1	5	12	4'-9	1'-8	3'-1	4	12	14'-6	5	12	4'-9	4	4.5	17'-11	4	9	18'-5	5	9	6'-1
3	5	12	7'-5	4	12	5'-6	4	12	4'-8	1'-9	2'-11	4	12	4'-8	1'-9	2'-11	4	12	12'-7	4	12	3'-8	4	4.5	17'-11	4	12	18'-5	4	12	5'-1
4	5	12	7'-5	4	12	4'-10	4	12	4'-8	1'-9	2'-11	4	12	4'-8	1'-9	2'-11	4	12	12'-2	4	12	3'-6	4	4.5	17'-11	4	12	18'-5	4	12	4'-11
5-7	5	12	7'-5	4	12	4'-9	4	12	4'-8	1'-9	2'-11	4	12	4'-8	1'-9	2'-11	4	12	12'-0	5	12	4'-1	4	4.5	17'-11	4	12	18'-5	4	12	5'-1
8-10	4	6	7'-5	4	12	5'-4	4	12	4'-8	1'-9	2'-11	4	12	4'-8	1'-9	2'-11	4	9	11'-9	4	9	3'-8	4	4.5	17'-11	4	12	18'-5	5	12	5'-10
11-13	4	9	7'-5	4	12	5'-11	4	9	4'-8	1'-9	2'-11	4	9	4'-8	1'-9	2'-11	4	9	11'-10	5	9	4'-3	4	4.5	17'-11	5	12	18'-5	5	12	5'-2
14-16	4	9	7'-7	4	12	6'-1	4	9	4'-9	1'-9	3'-0	4	9	4'-9	1'-9	3'-0	5	12	12'-0	6	12	4'-5	5	4.5	17'-11	5	12	18'-5	5	12	5'-4
17-19	5	15	17'-11	5	15	5'-8	4	9	4'-9	1'-8	3'-1	4	9	4'-9	1'-8	3'-1	5	12	12'-0	6	12	4'-5	5	4.5	17'-11	5	12	18'-5	5	12	5'-4
20-22	9	17'-11	4	9	5'-6	4	9	4'-11	1'-9	3'-2	4	9	4'-10	1'-8	3'-2	5	9	11'-10	5	9	3'-9	5	4.5	17'-11	5	12	18'-5	5	12	5'-6
23-25	6	18	17'-11	6	18	5'-11	4	9	5'-1	1'-10	3'-3	4	9	4'-10	1'-7	3'-3	5	9	11'-11	5	9	3'-10	5	4.5	17'-11	6	18	18'-5	6	18	6'-0

FILL	m4 SIZE	m4 SP	m4 LENGTH	m4 h	m4 v	m5 SIZE	m5 SP	m5 LENGTH	m5 h	m5 v	m6 SIZE	m6 SP	m6 LENGTH	m7 SIZE	m7 SP	m7 LENGTH	m9 SIZE	m9 SP*	m9 LENGTH	FILL
0	4	12	7'-8	1'-7	6'-1	5	12	7'-8	1'-7	6'-1	5	15	18'-5	5	15	3'-6	5	7.5	18'-5	0
1	4	12	7'-8	1'-7	6'-1	5	12	7'-8	1'-7	6'-1	5	15	18'-5	5	15	3'-9	5	7.5	18'-5	1
2	5	12	7'-10	1'-8	6'-2	5	12	7'-9	1'-7	6'-2	4	9	13'-4	5	9	4'-2	4	4.5	18'-5	2
3	4	12	7'-4	1'-7	5'-9	4	12	7'-4	1'-7	5'-9	4	12	12'-4	4	12	3'-6	4	4.5	18'-5	3
4	4	12	7'-4	1'-7	5'-9	4	12	7'-4	1'-7	5'-9	4	12	12'-2	4	12	3'-5	4	4.5	18'-5	4
5-7	4	12	7'-4	1'-7	5'-9	4	12	7'-4	1'-7	5'-9	4	12	12'-2	5	12	4'-1	4	4.5	18'-5	5-7
8-10	4	12	7'-4	1'-7	5'-9	4	12	7'-4	1'-7	5'-9	5	12	12'-1	5	12	3'-9	5	4.5	18'-5	8-10
11-13	4	9	7'-8	1'-7	6'-1	4	9	7'-8	1'-7	6'-1	5	12	12'-3	6	12	4'-4	5	4.5	18'-5	11-13
14-16	4	9	7'-9	1'-7	6'-2	4	9	7'-9	1'-7	6'-2	5	12	12'-3	6	12	4'-5	5	4.5	18'-5	14-16
17-19	4	9	7'-10	1'-7	6'-3	4	9	7'-10	1'-7	6'-3	5	12	12'-3	6	12	4'-5	5	4.5	18'-5	17-19
20-22	4	9	7'-11	1'-7	6'-4	4	9	7'-11	1'-7	6'-4	5	9	12'-1	5	9	3'-9	5	4.5	18'-5	20-22
23-25	4	9	8'-0	1'-7	6'-5	4	9	8'-0	1'-7	6'-5	7	18	12'-5	7	18	4'-5	7	4.5	18'-5	23-25

DIMENSIONS

FILL	S	H	A	B	C	D*	E*	F*	G*	J*	U	V	W	X	Y	Z
0	8	6	10.5	10	9	9	7.5	9	18	18	1'-3	9'-0	2'-4	2'-3	9'-3	1'-9
1	8	6	10.5	10	9	9	7.5	9	18	18	1'-3	6'-7	2'-2	2'-1	9'-3	1'-10
2	8	6	10	10.5	9	9	7.5	9	12	12	1'-6	5'-7	2'-5	1'-10	4'-2	2'-1
3	8	6	8	10	9	9	4.5	9	12	12	1'-11	3'-8	1'-10	2'-3	3'-2	1'-9
4	8	6	8	10	9	9	4.5	9	12	12	2'-4	3'-3	1'-9	2'-4	3'-0	1'-9
5-7	8	6	8	10	9	9	4.5	9	12	12	2'-6	3'-1	2'-1	2'-4	3'-0	2'-0
8-10	8	6	8	10	9	6	4.5	9	12	12	2'-3	2'-10	1'-10	1'-11	2'-11	1'-10
11-13	8	6	8	10	9	9	4.5	4.5	12	12	1'-11	2'-11	2'-2	2'-4	3'-1	2'-2
14-16	8	6	9	11	9	9	4.5	4.5	12	12	1'-11	3'-1	2'-3	2'-4	3'-1	2'-2
17-19	8	6	10	12	9	9	7.5	4.5	12	12	2'-3	3'-1	2'-3	2'-5	3'-1	2'-3
20-22	8	6	11	13	9	9	4.5	4.5	12	12	2'-5	2'-11	1'-11	2'-4	2'-11	1'-10
23-25	8	6	12	14	9	9	4.5	4.5	12	12	2'-2	3'-0	1'-11	2'-2	3'-3	2'-3

FILL	QUANTITIES CONCRETE YD³/FT SLAB	FLOOR	WALLS	TOTAL	STEEL LBS/FT
0	.649	.636	.467	1.752	212.97
1	.649	.636	.467	1.752	212.24
2	.621	.665	.467	1.753	235.84
3	.508	.636	.467	1.611	184.82
4	.508	.636	.467	1.611	180.63
5-7	.508	.636	.467	1.611	186.89
8-10	.508	.636	.467	1.611	202.79
11-13	.508	.636	.467	1.611	224.66
14-16	.564	.694	.467	1.725	229.97
17-19	.621	.751	.467	1.839	231.00
20-22	.677	.809	.467	1.953	238.47
23-25	.733	.867	.467	2.067	249.84

* THESE DIMENSIONS ARE CORRECT FOR 38' LONG STANDARD SECTIONS ONLY. DIMENSIONS MUST BE RECALCULATED FOR ALL OTHER SECTION LENGTHS.

NOTES:

1. SEE DRAWING TWRCB-GI-87 FOR GENERAL INFORMATION, SPECIFICATIONS, AND DESIGN STRESSES.

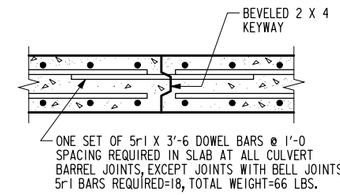

TOP SLAB CONSTRUCTION JOINT DETAIL

BENT BAR DETAIL

BARS	D
4	3
5	3¾
6	4½
7	5¼

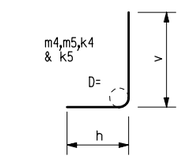

NOTE:
ALL DIMENSIONS ARE OUT TO OUT.
D = PIN DIAMETER.

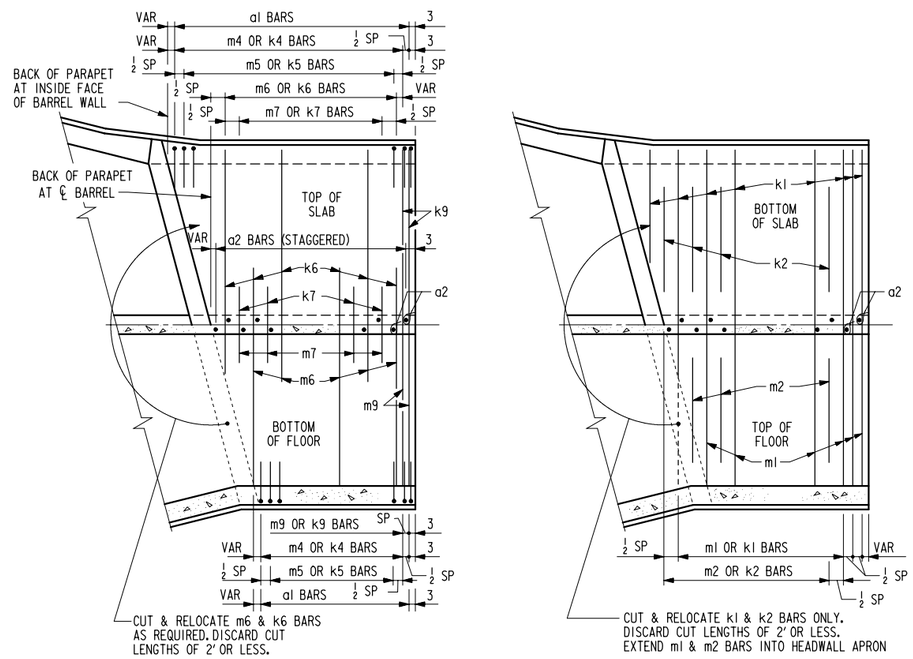

END SECTION - PLAN VIEW (KEYWAY NOT SHOWN.)

NOTE: END SECTION DETAILS SHOWN ARE FOR A 15° SKEW BARREL. USE FOR SKEWS OF 30° & 45° BY INCREASING THE NUMBER OF TRANSVERSE REINFORCING BARS REQUIRED TO BE CUT & RELOCATED.

NOTE : ALL LONGITUDINAL BARREL STEEL SHALL EXTEND AT LEAST TO THE BACKFACE OF PARAPET.

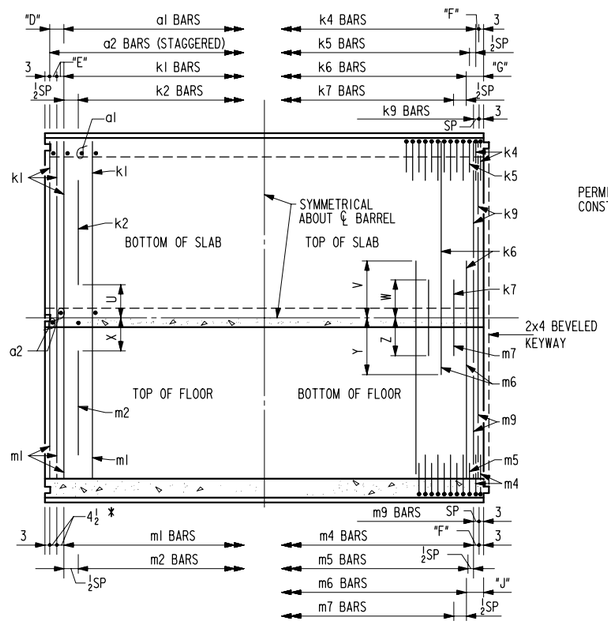

STANDARD SECTION PLAN VIEW

NOTE: TYPICAL FOR LENGTHS OF 38'.
(KEYWAY IS TO BE OMITTED WHEN BELL JOINTS ARE USED)

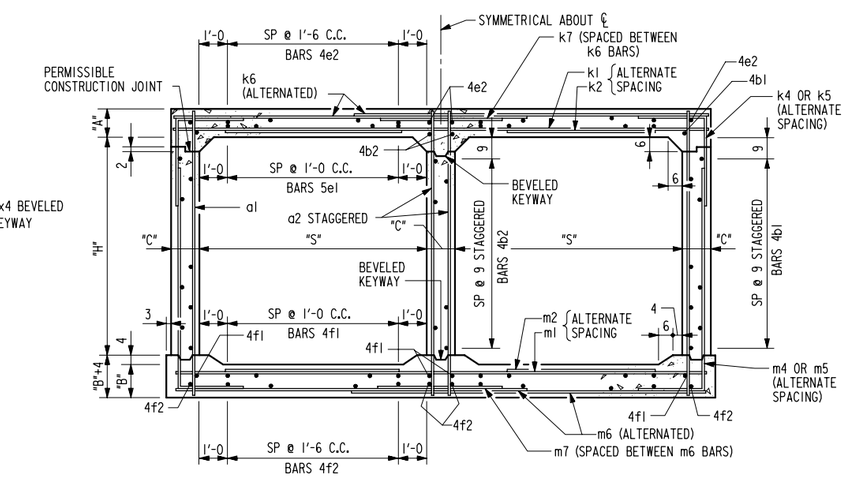

BARREL SECTION

LATEST REVISION DATE : 12-5-96

APPROVED BY: William A. Lundquist

STANDARD DESIGN

CULVERT BARREL DETAILS

FOR
TWIN REINFORCED CONCRETE BOX CULVERTS

IOWA DEPARTMENT OF TRANSPORTATION - HIGHWAY DIVISION

JULY , 1987

TWRCB 8-6-87

REVISED: 12/96 ; KEYWAY NOTATION CHANGED, DOWEL BAR LENGTH CHANGED.
TWRCB 8-6-87

VARIABLE DIMENSIONS AND QUANTITIES FOR BARREL SECTIONS

BAR LIST

FILL	a1 SIZE	a1 SP.	a1 LENGTH	a2 SIZE	a2 SP.	a2 LENGTH	b1 SIZE	b1 SP.	b1 NO.	b2 SIZE	b2 SP.	b2 NO.	e1 SIZE	e1 SP.	e1 NO.	e2 SIZE	e2 SP.	e2 NO.	f1 SIZE	f1 SP.	f1 NO.	f2 SIZE	f2 SP.	f2 NO.
0	4	9	9'-7	6	7.5	9'-7	4	9	22	4	9	12	5	12	14	4	18	14	4	12	18	4	18	14
1	4	9	9'-8	5	6	9'-8	4	9	22	4	9	12	5	12	14	4	18	14	4	12	18	4	18	14
2	4	9	9'-5	6	7.5	9'-5	4	9	22	4	9	12	5	12	14	4	18	14	4	12	18	4	18	14
3	4	6	9'-5	5	6	9'-5	4	9	22	4	9	12	5	12	14	4	18	14	4	12	18	4	18	14
4	5	12	9'-5	5	6	9'-5	4	9	22	4	9	12	5	12	14	4	18	14	4	12	18	4	18	14
5-7	4	6	9'-5	5	6	9'-5	4	9	22	4	9	12	5	12	14	4	18	14	4	12	18	4	18	14
8-10	4	9	9'-5	5	6	9'-5	4	9	22	4	9	12	5	12	14	4	18	14	4	12	18	4	18	14
11-13	4	12	9'-5	5	6	9'-5	4	9	22	4	9	12	5	12	14	4	18	14	4	12	18	4	18	14
14-16	5	12	9'-7	5	6	9'-7	4	9	22	4	9	12	5	12	14	4	18	14	4	12	18	4	18	14
17-19	5	12	9'-9	5	6	9'-9	4	9	22	4	9	12	5	12	14	4	18	14	4	12	18	4	18	14
20-22	4	9	9'-11	5	6	9'-11	4	9	22	4	9	12	5	12	14	4	18	14	4	12	18	4	18	14
23-25	6	9	10'-1	5	6	10'-1	4	9	22	4	9	12	5	12	14	4	18	14	4	12	18	4	18	14

FILL	k1 SIZE	k1 SP.	k1 NO.	k2 SIZE	k2 SP.	k2 LENGTH	k4 SIZE	k4 SP.	k4 LENGTH	k4 h	k4 v	k5 SIZE	k5 SP.	k5 LENGTH	k5 h	k5 v	k6 SIZE	k6 SP.	k6 LENGTH	k7 SIZE	k7 SP.	k7 LENGTH	k9 SIZE	k9 SP.	k9 LENGTH
0	5	15	18'-2	5	15	7'-1	5	15	4'-11	1'-9	3'-2	5	15	4'-11	1'-9	3'-2	4	15	18'-2	4	15	4'-7	4	7.5	18'-2
1	5	15	18'-2	5	15	7'-0	4	9	4'-11	1'-9	3'-2	4	9	4'-11	1'-9	3'-2	4	15	18'-2	4	15	4'-7	4	7.5	18'-2
2	5	12	18'-2	5	12	6'-1	4	9	5'-1	2'-2	2'-11	4	9	4'-9	1'-10	2'-11	4	12	14'-1	5	12	4'-8	4	4.5	18'-2
3	4	12	18'-2	4	12	5'-6	4	12	4'-10	1'-11	2'-11	4	12	4'-9	1'-10	2'-11	4	12	12'-9	4	12	3'-8	4	4.5	18'-2
4	4	12	18'-2	4	12	4'-10	4	12	4'-9	1'-10	2'-11	4	12	4'-9	1'-10	2'-11	4	12	12'-4	4	12	3'-6	4	4.5	18'-2
5-7	4	12	18'-2	4	12	4'-9	4	12	4'-9	1'-10	2'-11	4	12	4'-9	1'-10	2'-11	4	12	11'-11	4	12	3'-9	4	4.5	18'-2
8-10	4	12	18'-2	4	12	5'-3	4	9	4'-9	1'-10	2'-11	4	9	4'-9	1'-10	2'-11	4	9	11'-10	4	9	3'-8	4	4.5	18'-2
11-13	4	12	18'-2	5	12	5'-11	5	12	4'-11	2'-0	2'-11	5	12	4'-9	1'-10	2'-11	4	9	12'-0	5	9	4'-3	4	4.5	18'-2
14-16	5	12	18'-2	5	12	6'-0	5	12	4'-11	1'-11	3'-0	5	12	4'-10	1'-10	3'-0	4	9	12'-0	5	9	4'-4	4	4.5	18'-2
17-19	5	15	18'-2	5	15	5'-8	5	12	4'-10	1'-9	3'-1	5	12	4'-10	1'-9	3'-1	6	15	12'-2	6	15	4'-3	6	7.5	18'-2
20-22	5	12	18'-2	5	12	6'-2	4	9	5'-2	1'-9	3'-5	5	9	5'-5	2'-0	3'-5	5	12	12'-2	6	12	4'-6	5	4.5	18'-2
23-25	5	15	18'-2	4	9	5'-9	4	9	5'-1	1'-10	3'-3	4	9	4'-11	1'-8	3'-3	7	18	12'-4	7	18	4'-6	7	4.5	18'-2

FILL	m1 SIZE	m1 SP.	m1 LENGTH	m2 SIZE	m2 SP.	m2 LENGTH	m4 SIZE	m4 SP	m4 LENGTH	m4 h	m4 v	m5 SIZE	m5 SP	m5 LENGTH	m5 h	m5 v	m6 SIZE	m6 SP	m6 LENGTH	m7 SIZE	m7 SP	m7 LENGTH	m9 SIZE	m9 SP	m9 LENGTH	FILL
0	4	12	18'-8	4	12	5'-2	5	15	9'-9	1'-8	8'-1	5	15	9'-9	1'-8	8'-1	5	15	18'-8	5	15	3'-7	5	7.5	18'-8	0
1	4	12	18'-8	4	12	5'-4	4	9	9'-10	1'-8	8'-2	4	9	9'-10	1'-8	8'-2	5	15	18'-8	5	15	3'-8	5	7.5	18'-8	1
2	4	12	18'-8	5	12	6'-1	4	9	9'-9	1'-8	8'-1	4	9	9'-9	1'-8	8'-1	4	9	13'-2	4	9	3'-6	4	4.5	18'-8	2
3	4	12	18'-8	4	12	5'-2	4	12	9'-6	1'-9	7'-9	4	12	9'-5	1'-8	7'-9	4	12	12'-5	4	12	3'-7	4	4.5	18'-8	3
4	4	12	18'-8	4	12	4'-11	4	12	9'-6	1'-9	7'-9	4	12	9'-5	1'-8	7'-9	4	12	12'-3	4	12	3'-6	4	4.5	18'-8	4
5-7	4	12	18'-8	4	12	5'-1	4	12	9'-7	1'-10	7'-9	4	12	9'-5	1'-8	7'-9	4	12	12'-3	5	12	4'-1	4	4.5	18'-8	5-7
8-10	4	12	18'-8	5	12	5'-10	4	9	9'-10	1'-9	8'-1	4	9	9'-9	1'-8	8'-1	5	12	12'-3	5	12	3'-9	5	4.5	18'-8	8-10
11-13	5	12	18'-8	5	12	5'-2	5	12	10'-0	1'-11	8'-1	5	12	9'-9	1'-8	8'-1	5	12	12'-4	6	12	4'-4	5	4.5	18'-8	11-13
14-16	5	12	18'-8	5	12	5'-4	5	12	10'-0	1'-10	8'-2	5	12	9'-10	1'-8	8'-2	5	12	12'-5	6	12	4'-5	5	4.5	18'-8	14-16
17-19	5	12	18'-8	5	12	5'-4	5	12	10'-0	1'-9	8'-3	5	12	9'-11	1'-8	8'-3	5	12	12'-5	6	12	4'-5	5	4.5	18'-8	17-19
20-22	5	12	18'-8	5	12	5'-6	4	9	10'-3	1'-8	8'-7	5	9	10'-6	1'-11	8'-7	5	9	12'-3	5	9	3'-9	5	4.5	18'-8	20-22
23-25	6	18	12'-4	6	18	6'-0	4	9	10'-1	1'-8	8'-5	4	9	10'-1	1'-8	8'-5	7	18	12'-7	7	18	4'-6	7	4.5	18'-8	23-25

DIMENSIONS

FILL	S	H	A	B	C	D*	E*	F*	G*	J*	U	V	W	X	Y	Z
0	8	8	10.5	10	10	9	7.5	7.5	18	18	1'-2	9'-1	2'-4	2'-2	9'-4	1'-10
1	8	8	11	10.5	10	9	7.5	4.5	18	18	1'-3	9'-1	2'-4	2'-1	9'-4	1'-10
2	8	8	8	10	10	9	4.5	4.5	12	12	1'-7	5'-0	2'-4	1'-9	3'-10	1'-9
3	8	8	8	10	10	6	4.5	9	12	12	1'-11	3'-8	1'-10	2'-3	3'-1	1'-10
4	8	8	8	10	10	9	4.5	9	12	12	2'-4	3'-3	1'-9	2'-5	2'-11	1'-9
5-7	8	8	8	10	10	6	4.5	9	12	12	2'-5	2'-10	1'-11	2'-4	2'-11	2'-1
8-10	8	8	8	10	10	9	4.5	4.5	12	12	2'-4	2'-9	1'-10	1'-11	2'-11	1'-11
11-13	8	8	8	10	10	9	4.5	9	12	12	1'-11	2'-11	2'-2	2'-4	3'-0	2'-2
14-16	8	8	9	11	10	9	4.5	9	12	12	2'-0	2'-11	2'-2	2'-3	3'-1	2'-2
17-19	8	8	10	12	10	9	7.5	9	18	12	2'-3	3'-1	2'-2	2'-5	3'-1	2'-3
20-22	8	8	11	13	10	9	4.5	4.5	12	12	2'-0	3'-1	2'-3	2'-4	2'-11	1'-10
23-25	8	8	12	14	10	9	4.5	4.5	12	12	2'-3	3'-3	2'-3	2'-2	3'-3	2'-3

FILL	QUANTITIES CONCRETE YD³/FT SLAB	FLOOR	WALLS	TOTAL	STEEL LBS/FT
0	.661	.647	.703	2.011	236.32
1	.690	.676	.703	2.069	236.95
2	.518	.647	.703	1.868	247.42
3	.518	.647	.703	1.868	213.13
4	.518	.647	.703	1.868	206.32
5-7	.518	.647	.703	1.868	213.26
8-10	.518	.647	.703	1.868	232.79
11-13	.518	.647	.703	1.868	254.21
14-16	.576	.705	.703	1.984	263.29
17-19	.633	.764	.703	2.100	268.42
20-22	.690	.822	.703	2.215	278.03
23-25	.747	.881	.703	2.331	294.89

* THESE DIMENSIONS ARE CORRECT FOR 38' LONG STANDARD SECTIONS ONLY. DIMENSIONS MUST BE RECALCULATED FOR ALL OTHER SECTION LENGTHS.

NOTES:

1. SEE DRAWING TWRCB-G1-87 FOR GENERAL INFORMATION, SPECIFICATIONS, AND DESIGN STRESSES.

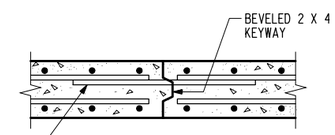

TOP SLAB CONSTRUCTION JOINT DETAIL

BENT BAR DETAIL

BARS	D
4	3
5	3¾
6	4½
7	5¼

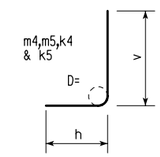

NOTE:
ALL DIMENSIONS ARE OUT TO OUT.
D = PIN DIAMETER.

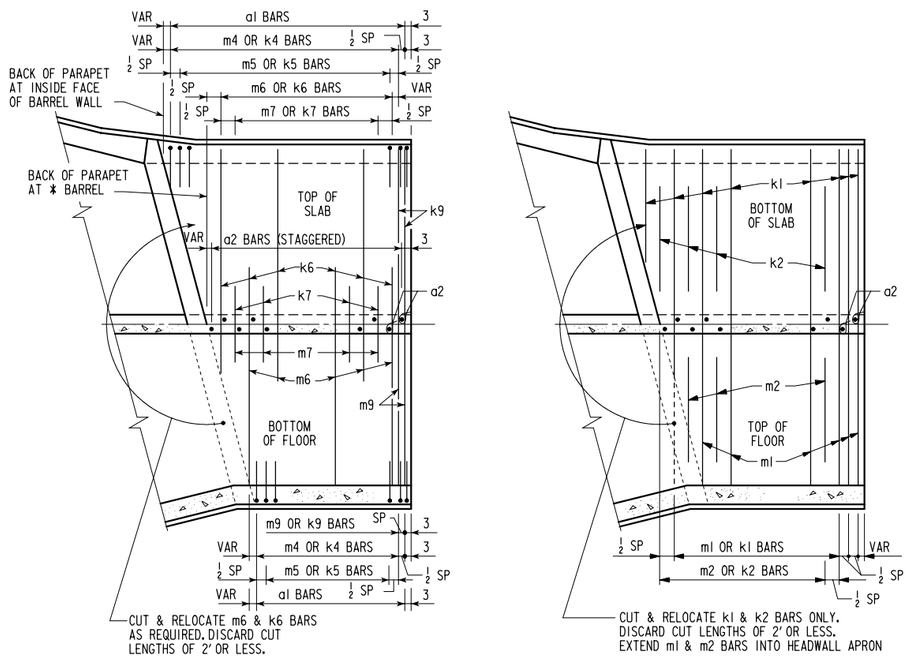

END SECTION - PLAN VIEW (KEYWAY NOT SHOWN.)

NOTE: END SECTION DETAILS SHOWN ARE FOR A 15° SKEW BARREL. USE FOR SKEWS OF 30° & 45° BY INCREASING THE NUMBER OF TRANSVERSE REINFORCING BARS REQUIRED TO BE CUT & RELOCATED.

NOTE : ALL LONGITUDINAL BARREL STEEL SHALL EXTEND AT LEAST TO THE BACKFACE OF PARAPET.

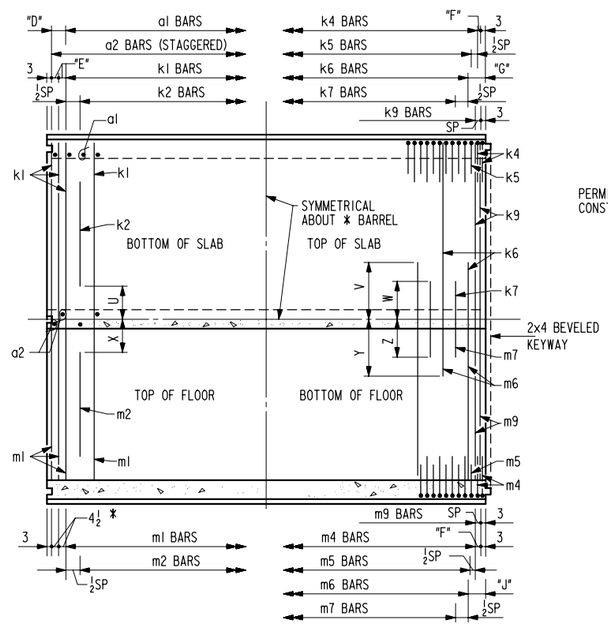

STANDARD SECTION PLAN VIEW

NOTE: TYPICAL FOR LENGTHS OF 38'.
(KEYWAY IS TO BE OMITTED WHEN BELL JOINTS ARE USED)

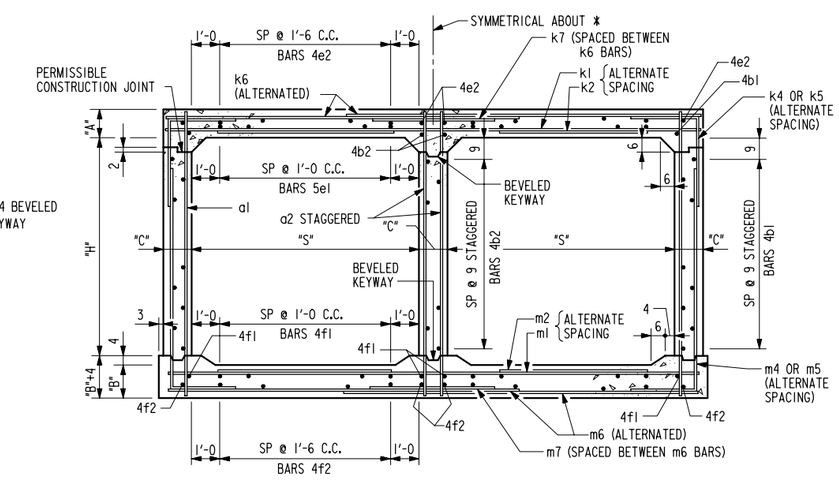

BARREL SECTION

REVISED: 12/96 ; KEYWAY NOTATION CHANGED, DOWEL BAR LENGTH CHANGED.
TWRCB 8-8-87

LATEST REVISION DATE : 12-5-96

APPROVED BY : William A. Lundquist

STANDARD DESIGN

CULVERT BARREL DETAILS

FOR
TWIN REINFORCED CONCRETE BOX CULVERTS

IOWA DEPARTMENT OF TRANSPORTATION - HIGHWAY DIVISION

JULY , 1987

TWRCB 8-8-87

VARIABLE DIMENSIONS AND QUANTITIES FOR BARREL SECTIONS

BAR LIST

FILL	a1 SIZE	a1 SP	a1 LENGTH	a2 SIZE	a2 SP	a2 LENGTH	b1 SIZE	b1 SP	b1 NO.	b2 SIZE	b2 SP	b2 NO.	e1 SIZE	e1 SP	e1 NO.	e2 SIZE	e2 SP	e2 NO.	f1 SIZE	f1 SP	f1 NO.	f2 SIZE	f2 SP	f2 NO.
0	6	12	11'-7	6	7.5	11'-7	4	9	28	4	9	15	5	12	14	4	18	14	4	12	18	4	18	14
1	4	9	11'-8	5	6	11'-8	4	9	28	4	9	15	5	12	14	4	18	14	4	12	18	4	18	14
2	4	9	11'-5	5	6	11'-5	4	9	28	4	9	15	5	12	14	4	18	14	4	12	18	4	18	14
3	4	9	11'-5	5	6	11'-5	4	9	28	4	9	15	5	12	14	4	18	14	4	12	18	4	18	14
4	4	9	11'-5	5	6	11'-5	4	9	28	4	9	15	5	12	14	4	18	14	4	12	18	4	18	14
5-7	4	9	11'-5	5	6	11'-5	4	9	28	4	9	15	5	12	14	4	18	14	4	12	18	4	18	14
8-10	4	12	11'-5	5	6	11'-5	4	9	28	4	9	15	5	12	14	4	18	14	4	12	18	4	18	14
11-13	4	9	11'-5	5	6	11'-5	4	9	28	4	9	15	5	12	14	4	18	14	4	12	18	4	18	14
14-16	6	9	11'-7	5	6	11'-7	4	9	28	4	9	15	5	12	14	4	18	14	4	12	18	4	18	14
17-19	4	9	11'-9	5	6	11'-9	4	9	28	4	9	15	5	12	14	4	18	14	4	12	18	4	18	14
20-22	4	6	11'-11	5	6	11'-11	4	9	28	4	9	15	5	12	14	4	18	14	4	12	18	4	18	14
23-25	4	6	12'-1	5	6	12'-1	4	9	28	4	9	15	5	12	14	4	18	14	4	12	18	4	18	14

FILL	k1 SIZE	k1 SP	k1 NO.	k2 SIZE	k2 SP	k2 LENGTH	k4 SIZE	k4 SP	k4 LENGTH	k4 h	k4 v	k5 SIZE	k5 SP	k5 LENGTH	k5 h	k5 v	k6 SIZE	k6 SP	k6 LENGTH	k7 SIZE	k7 SP	k7 LENGTH	k9 SIZE	k9 SP*	k9 LENGTH
0	5	15	18'-2	5	15	7'-2	4	15	4'-11	1'-9	3'-2	5	15	4'-11	1'-9	3'-2	4	15	18'-2	4	15	5'-0	4	7.5	18'-2
1	5	15	18'-2	5	15	7'-1	4	9	4'-11	1'-9	3'-2	4	9	4'-11	1'-9	3'-2	4	15	18'-2	4	15	4'-9	4	7.5	18'-2
2	5	12	18'-2	5	12	6'-2	4	9	4'-9	1'-10	2'-11	4	9	4'-9	1'-10	2'-11	4	12	18'-2	5	12	4'-9	4	4.5	18'-2
3	4	12	18'-2	4	12	5'-7	5	15	5'-3	2'-4	2'-11	5	15	4'-9	1'-10	2'-11	4	12	12'-11	4	12	3'-8	4	4.5	18'-2
4	4	12	18'-2	4	12	4'-11	5	15	5'-2	2'-3	2'-11	5	15	4'-9	1'-10	2'-11	4	12	12'-4	4	12	3'-6	4	4.5	18'-2
5-7	4	12	18'-2	4	12	4'-9	4	9	5'-0	2'-1	2'-11	4	9	4'-9	1'-10	2'-11	4	12	12'-0	4	12	3'-9	4	4.5	18'-2
8-10	4	12	18'-2	4	12	5'-3	5	12	5'-1	2'-2	2'-11	5	12	4'-9	1'-10	2'-11	4	9	11'-10	4	9	3'-8	4	4.5	18'-2
11-13	4	12	18'-2	5	12	5'-11	4	9	5'-3	2'-1	3'-2	5	9	5'-3	2'-1	3'-2	4	9	12'-0	5	9	4'-3	4	4.5	18'-2
14-16	5	12	18'-2	5	12	6'-0	4	9	5'-0	2'-0	3'-0	4	9	4'-10	1'-10	3'-0	4	9	12'-0	5	9	4'-4	4	4.5	18'-2
17-19	5	15	18'-2	5	15	5'-8	5	12	5'-3	1'-11	3'-4	6	12	5'-3	1'-11	3'-4	6	15	12'-2	6	15	4'-3	6	7.5	18'-2
20-22	5	12	18'-2	5	12	6'-2	5	12	5'-3	1'-11	3'-4	6	12	5'-3	1'-11	3'-4	5	12	12'-2	6	12	4'-6	5	4.5	18'-2
23-25	4	9	18'-2	4	9	5'-8	5	12	5'-3	1'-10	3'-5	6	12	5'-3	1'-10	3'-5	7	18	12'-4	7	18	4'-5	7	4.5	18'-2

FILL	m1 SIZE	m1 SP	m1 LENGTH	m2 SIZE	m2 SP	m2 LENGTH	m4 SIZE	m4 SP	m4 LENGTH	m4 h	m4 v	m5 SIZE	m5 SP	m5 LENGTH	m5 h	m5 v	m6 SIZE	m6 SP	m6 LENGTH	m7 SIZE	m7 SP	m7 LENGTH	m9 SIZE	m9 SP*	m9 LENGTH	FILL
0	4	12	18'-8	4	12	5'-4	5	15	11'-9	1'-8	10'-1	5	15	11'-9	1'-8	10'-1	5	15	18'-8	5	15	3'-8	5	7.5	18'-8	0
1	4	12	18'-8	4	12	5'-6	4	9	11'-10	1'-8	10'-2	4	9	11'-10	1'-8	10'-2	5	15	18'-8	5	15	3'-8	5	7.5	18'-8	1
2	4	12	18'-8	5	12	6'-3	4	9	11'-10	1'-9	10'-1	4	9	11'-9	1'-8	10'-1	4	9	13'-3	4	9	3'-7	4	4.5	18'-8	2
3	4	12	12'-11	4	12	5'-3	5	15	12'-4	2'-3	10'-1	5	15	11'-9	1'-8	10'-1	4	12	12'-7	5	12	3'-11	4	4.5	18'-8	3
4	4	12	12'-4	4	12	5'-1	5	15	12'-4	2'-3	10'-1	5	15	11'-9	1'-8	10'-1	4	12	12'-3	4	12	3'-7	4	4.5	18'-8	4
5-7	4	12	12'-0	4	12	5'-2	4	9	12'-2	2'-1	10'-1	4	9	11'-9	1'-8	10'-1	4	12	12'-3	5	12	4'-2	4	4.5	18'-8	5-7
8-10	4	9	11'-10	4	9	3'-8	4	9	12'-2	2'-1	10'-1	5	12	11'-9	1'-8	10'-1	5	12	12'-3	5	12	3'-9	5	4.5	18'-8	8-10
11-13	4	9	12'-0	5	9	4'-3	4	4.5	18'-2	5	12	18'-8	5	12	5'-3	4	9	12'-4	2'-0	10'-4	5	9	12'-3	1'-11	10'-4	5	12	12'-4	6	12	4'-4	5	4.5	18'-8	11-13
14-16	4	9	12'-0	5	9	4'-4	4	4.5	18'-2	4	9	18'-8	4	9	5'-3	4	9	12'-2	1'-11	10'-3	4	9	11'-11	1'-8	10'-3	5	12	12'-5	6	12	4'-4	5	4.5	18'-8	14-16
17-19	6	15	12'-2	6	15	4'-3	6	7.5	18'-2	5	12	18'-8	5	12	5'-4	5	12	12'-4	2'-0	10'-4	6	12	12'-2	1'-10	10'-4	5	12	12'-5	6	12	4'-5	5	4.5	18'-8	17-19
20-22	5	12	12'-2	6	12	4'-6	5	4.5	18'-2	5	12	18'-8	5	12	5'-5	5	12	12'-4	1'-10	10'-6	6	12	12'-4	1'-10	10'-6	5	9	12'-3	5	9	3'-9	5	4.5	18'-8	20-22
23-25	7	18	12'-4	7	18	4'-5	7	4.5	18'-2	6	18	18'-8	6	18	5'-11	5	12	12'-8	2'-0	10'-8	6	12	12'-6	1'-10	10'-8	5	12	12'-5	6	12	4'-6	5	4.5	18'-8	23-25

DIMENSIONS

FILL	S	H	A	B	C	D*	E*	F*	G*	J*	U	V	W	X	Y	Z
0	8	10	10.5	10	10	9	7.5	7.5	18	18	1'-1	9'-1	2'-6	2'-1	9'-4	1'-10
1	8	10	11	10.5	10	9	7.5	4.5	18	18	1'-2	9'-1	2'-5	2'-0	9'-4	1'-10
2	8	10	8	10	10	9	4.5	4.5	12	12	1'-7	9'-1	2'-5	1'-8	3'-11	1'-10
3	8	10	8	10	10	9	4.5	7.5	12	12	1'-10	3'-10	1'-10	2'-2	3'-3	2'-0
4	8	10	8	10	10	9	4.5	7.5	12	12	2'-3	3'-3	1'-9	2'-3	2'-11	1'-9
5-7	8	10	8	10	10	9	4.5	4.5	12	12	2'-5	2'-11	1'-10	2'-3	2'-11	2'-1
8-10	8	10	8	10	10	9	4.5	9	12	12	2'-3	2'-9	1'-10	1'-11	2'-11	1'-11
11-13	8	10	8	10	10	9	4.5	4.5	12	12	1'-11	2'-11	2'-2	2'-3	3'-0	2'-2
14-16	8	10	9	11.5	10	9	4.5	4.5	12	12	1'-11	2'-11	2'-2	2'-4	3'-1	2'-2
17-19	8	10	10	12	10	9	7.5	9	18	12	2'-2	3'-1	2'-1	2'-4	3'-1	2'-3
20-22	8	10	11	13	10	6	4.5	9	12	12	1'-11	3'-1	2'-3	2'-4	2'-11	1'-10
23-25	8	10	12	14.5	10	6	4.5	9	12	12	2'-3	3'-3	2'-3	2'-2	3'-1	2'-3

FILL	QUANTITIES CONCRETE YD³/FT SLAB	FLOOR	WALLS	TOTAL	STEEL LBS/FT
0	.661	.647	.889	2.197	269.89
1	.690	.676	.889	2.255	258.18
2	.518	.647	.889	2.054	268.11
3	.518	.647	.889	2.054	240.21
4	.518	.647	.889	2.054	236.66
5-7	.518	.647	.889	2.054	241.16
8-10	.518	.647	.889	2.054	259.58
11-13	.518	.647	.889	2.054	290.71
14-16	.576	.734	.889	2.199	293.58
17-19	.633	.764	.889	2.286	305.08
20-22	.690	.822	.889	2.401	318.71
23-25	.747	.910	.889	2.546	325.87

* THESE DIMENSIONS ARE CORRECT FOR 38' LONG STANDARD SECTIONS ONLY. DIMENSIONS MUST BE RECALCULATED FOR ALL OTHER SECTION LENGTHS.

NOTES:

1. SEE DRAWING TWRCB-G1-87 FOR GENERAL INFORMATION, SPECIFICATIONS, AND DESIGN STRESSES.

BENT BAR DETAIL

BARS	D
4	3
5	3 3/4
6	4 1/2
7	5 1/4

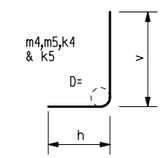

NOTE:
ALL DIMENSIONS ARE OUT TO OUT.
D = PIN DIAMETER.

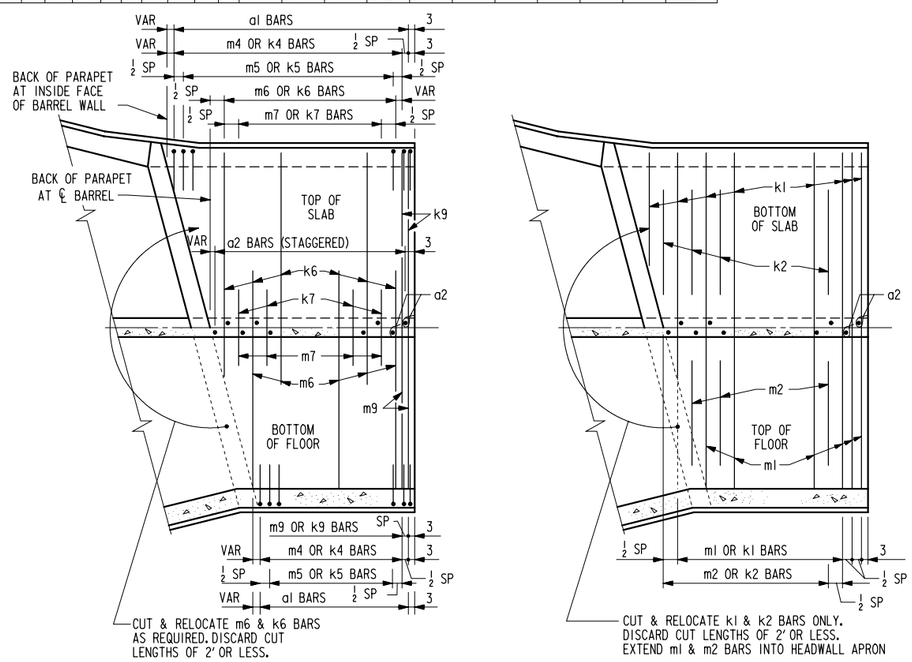

END SECTION - PLAN VIEW (KEYWAY NOT SHOWN.)

NOTE: END SECTION DETAILS SHOWN ARE FOR A 15° SKEW BARREL. USE FOR SKEWS OF 30° & 45° BY INCREASING THE NUMBER OF TRANSVERSE REINFORCING BARS REQUIRED TO BE CUT & RELOCATED.

NOTE : ALL LONGITUDINAL BARREL STEEL SHALL EXTEND AT LEAST TO THE BACKFACE OF PARAPET.

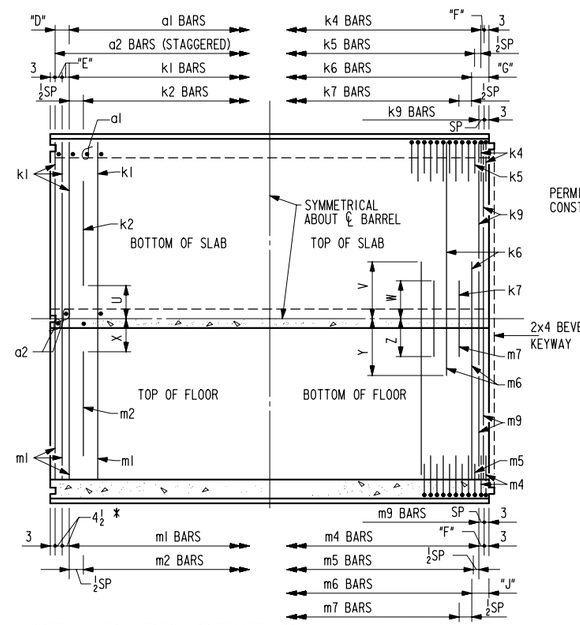

STANDARD SECTION PLAN VIEW

NOTE: TYPICAL FOR LENGTHS OF 38'.
(KEYWAY IS TO BE OMITTED WHEN BELL JOINTS ARE USED)

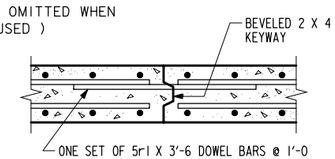

ONE SET OF 5r1 X 3'-6 DOWEL BARS @ 1'-0 SPACING REQUIRED IN SLAB AT ALL CULVERT BARREL JOINTS, EXCEPT JOINTS WITH BELL JOINTS. 5r1 BARS REQUIRED=18, TOTAL WEIGHT=66 LBS.

TOP SLAB CONSTRUCTION JOINT DETAIL

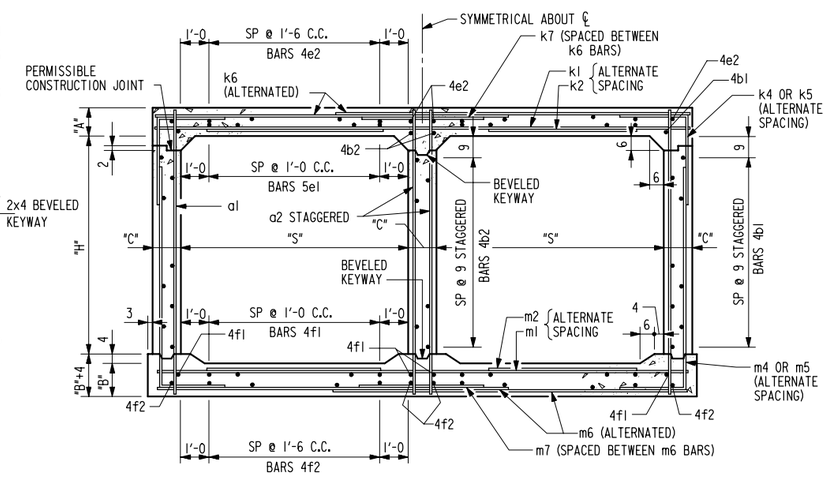

BARREL SECTION

REVISED: 12/96 ; KEYWAY NOTATION CHANGED, DOWEL BAR LENGTH CHANGED.
TWRCB 8-10-87

LATEST REVISION DATE : 12-5-96

APPROVED BY: William A. Lundquist

STANDARD DESIGN

CULVERT BARREL DETAILS

FOR
TWIN REINFORCED CONCRETE BOX CULVERTS

IOWA DEPARTMENT OF TRANSPORTATION - HIGHWAY DIVISION

JULY , 1987

TWRCB 8-10-87

VARIABLE DIMENSIONS AND QUANTITIES FOR BARREL SECTIONS

BAR LIST

FILL	a1 SIZE	a1 SP	a1 LENGTH	a2 SIZE	a2 SP	a2 LENGTH	b1 SIZE	b1 SP	b1 NO.	b2 SIZE	b2 SP	b2 NO.	e1 SIZE	e1 SP	e1 NO.	e2 SIZE	e2 SP	e2 NO.	f1 SIZE	f1 SP	f1 NO.	f2 SIZE	f2 SP	f2 NO.	k1 SIZE	k1 SP	k1 LENGTH	k2 SIZE	k2 SP	k2 LENGTH
0	5	12	7'-8	5	4.5	7'-8	4	9	16	4	9	9	5	12	18	4	18	16	4	12	22	4	18	16	5	12	21'-11	5	12	8'-1
1	5	12	7'-9	5	4.5	7'-9	4	9	16	4	9	9	5	12	18	4	18	16	4	12	22	4	18	16	5	12	21'-11	5	12	8'-0
2	5	12	7'-5	5	4.5	7'-5	4	9	16	4	9	9	5	12	18	4	18	16	4	12	22	4	18	16	5	12	21'-11	6	12	8'-3
3	4	9	7'-5	4	4.5	7'-5	4	9	16	4	9	9	5	12	18	4	18	16	4	12	22	4	18	16	4	9	21'-11	4	9	6'-7
4	4	9	7'-5	4	4.5	7'-5	4	9	16	4	9	9	5	12	18	4	18	16	4	12	22	4	18	16	4	12	21'-11	5	12	7'-1
5-7	4	9	7'-5	4	4.5	7'-5	4	9	16	4	9	9	5	12	18	4	18	16	4	12	22	4	18	16	4	12	21'-11	5	12	7'-0
8-10	5	12	7'-6	4	4.5	7'-6	4	9	16	4	9	9	5	12	18	4	18	16	4	12	22	4	18	16	5	12	21'-11	5	12	6'-4
11-13	5	12	7'-9	4	4.5	7'-9	4	9	16	4	9	9	5	12	18	4	18	16	4	12	22	4	18	16	5	15	21'-11	6	15	7'-4
14-16	5	12	7'-11	4	4.5	7'-11	4	9	16	4	9	9	5	12	18	4	18	16	4	12	22	4	18	16	4	9	21'-11	5	9	7'-1
17-19	5	12	8'-2	4	4.5	8'-2	4	9	16	4	9	9	5	12	18	4	18	16	4	12	22	4	18	16	4	9	21'-11	5	9	7'-3
20-22	4	12	8'-4	4	4.5	8'-4	4	9	16	4	9	9	5	12	18	4	18	16	4	12	22	4	18	16	4	9	21'-11	5	9	7'-6
23-25	4	12	8'-7	4	4.5	8'-7	4	9	16	4	9	9	5	12	18	4	18	16	4	12	22	4	18	16	4	9	21'-11	5	9	7'-10

FILL	k4 SIZE	k4 SP	k4 LENGTH	k4 h	k4 v	k5 SIZE	k5 SP	k5 LENGTH	k5 h	k5 v	k6 SIZE	k6 SP	k6 LENGTH	k7 SIZE	k7 SP	k7 LENGTH
0	4	12	4'-10	1'-8	3'-2	5	12	4'-10	1'-8	3'-2	4	12	21'-11	5	12	5'-2
1	4	12	4'-11	1'-9	3'-2	5	12	4'-10	1'-8	3'-2	5	15	17'-8	5	15	4'-8
2	5	12	5'-1	2'-1	3'-0	5	12	4'-9	1'-9	3'-0	5	12	16'-7	6	12	5'-5
3	4	9	4'-9	1'-10	2'-11	4	9	4'-8	1'-9	2'-11	5	12	15'-2	5	12	4'-7
4	4	9	4'-8	1'-9	2'-11	4	9	4'-8	1'-9	2'-11	5	12	14'-10	5	12	4'-5
5-7	4	9	4'-8	1'-9	2'-11	4	9	4'-8	1'-9	2'-11	5	12	14'-8	6	12	4'-11
8-10	5	12	4'-9	1'-9	3'-0	5	12	4'-9	1'-9	3'-0	6	12	14'-6	6	12	4'-7
11-13	5	12	4'-10	1'-9	3'-1	5	12	4'-9	1'-8	3'-1	7	15	14'-8	7	15	4'-9
14-16	5	12	4'-11	1'-9	3'-2	5	12	4'-10	1'-8	3'-2	5	9	14'-7	6	9	4'-11
17-19	5	12	5'-2	1'-10	3'-4	5	12	4'-11	1'-7	3'-4	5	9	14'-7	6	9	4'-11
20-22	5	12	5'-4	1'-11	3'-5	5	12	5'-0	1'-7	3'-5	6	12	14'-8	7	12	5'-2
23-25	5	12	5'-11	2'-5	3'-6	5	12	5'-6	2'-0	3'-6	6	12	14'-9	7	12	5'-4

FILL	k9 SIZE	k9 SP*	k9 LENGTH	m1 SIZE	m1 SP	m1 LENGTH	m2 SIZE	m2 SP	m2 LENGTH	m4 SIZE	m4 SP	m4 LENGTH	m4 h	m4 v
0	4	4.5	21'-11	4	12	22'-5	5	12	6'-8	5	12	7'-9	1'-7	6'-2
1	5	7.5	21'-11	4	12	22'-5	5	12	6'-11	5	12	7'-9	1'-7	6'-2
2	5	4.5	21'-11	5	12	22'-5	5	12	6'-5	5	12	7'-10	1'-9	6'-1
3	5	4.5	21'-11	4	12	22'-5	5	12	7'-0	4	9	7'-10	1'-9	6'-1
4	5	4.5	21'-11	4	12	22'-5	5	12	6'-11	4	9	7'-10	1'-9	6'-1
5-7	5	4.5	21'-11	5	12	22'-5	5	12	6'-1	4	9	7'-8	1'-7	6'-1
8-10	6	4.5	21'-11	4	9	22'-5	5	9	6'-11	5	12	7'-11	1'-9	6'-2
11-13	7	7.5	21'-11	4	9	22'-5	5	9	7'-0	5	12	7'-10	1'-7	6'-3
14-16	5	4.5	21'-11	4	9	22'-5	5	9	7'-2	5	12	7'-11	1'-7	6'-4
17-19	5	4.5	21'-11	4	9	22'-5	5	9	7'-4	5	12	8'-2	1'-8	6'-6
20-22	6	4.5	21'-11	4	9	22'-5	5	9	7'-7	5	12	8'-4	1'-9	6'-7
23-25	6	4.5	21'-11	4	9	22'-5	5	9	7'-11	5	12	8'-6	1'-10	6'-8

m5 SIZE	m5 SP	m5 LENGTH	m5 h	m5 v	m6 SIZE	m6 SP	m6 LENGTH	m7 SIZE	m7 SP	m7 LENGTH	m9 SIZE	m9 SP*	m9 LENGTH	FILL
5	12	7'-9	1'-7	6'-2	4	9	22'-5	4	9	3'-10	4	4.5	22'-5	0
5	12	7'-9	1'-7	6'-2	5	12	22'-5	5	12	3'-11	5	4.5	22'-5	1
5	12	7'-8	1'-7	6'-1	5	9	15'-8	5	9	4'-0	5	4.5	22'-5	2
4	9	7'-8	1'-7	6'-1	4	9	15'-0	5	9	4'-6	4	4.5	22'-5	3
4	9	7'-8	1'-7	6'-1	4	9	14'-10	5	9	4'-6	4	4.5	22'-5	4
4	9	7'-8	1'-7	6'-1	5	9	14'-8	5	9	3'-11	5	4.5	22'-5	5-7
5	12	7'-9	1'-7	6'-2	5	9	14'-9	6	9	4'-7	5	4.5	22'-5	8-10
5	12	7'-10	1'-7	6'-3	7	15	14'-11	7	15	4'-8	7	7.5	22'-5	11-13
5	12	7'-11	1'-7	6'-4	5	9	14'-9	6	9	4'-10	5	4.5	22'-5	14-16
5	12	8'-1	1'-7	6'-6	5	9	14'-10	6	9	4'-11	5	4.5	22'-5	17-19
5	12	8'-2	1'-7	6'-7	5	9	14'-10	6	9	5'-0	5	4.5	22'-5	20-22
5	12	8'-3	1'-7	6'-8	6	12	15'-0	7	12	5'-2	6	4.5	22'-5	23-25

DIMENSIONS

FILL	S	H	A	B	C	D*	E*	F*	G*	J*	U	V	W	X	Y	Z	QUANTITIES: CONCRETE YD³/FT SLAB	FLOOR	WALLS	TOTAL	STEEL LBS/FT
0	10	6	10.5	10.5	9	9	4.5	9	12	12	1'-10	11'-0	2'-7	2'-7	11'-3	1'-11	.779	.794	.467	2.040	271.29
1	10	6	11	11	9	9	4.5	9	18	12	1'-11	6'-9	2'-4	2'-6	11'-3	1'-11	.813	.829	.467	2.109	276.37
2	10	6	8.5	10	9	9	4.5	9	12	12	1'-8	5'-8	2'-9	2'-8	4'-6	2'-0	.641	.759	.467	1.867	301.05
3	10	6	8	10	9	9	4.5	4.5	12	12	2'-6	4'-3	2'-3	2'-4	3'-10	2'-3	.607	.759	.467	1.833	245.61
4	10	6	8	10	9	9	4.5	4.5	12	12	2'-4	3'-11	2'-3	2'-5	3'-8	2'-3	.607	.759	.467	1.833	242.92
5-7	10	6	8	10	9	9	4.5	4.5	12	12	2'-5	3'-9	2'-6	2'-10	3'-6	2'-0	.607	.759	.467	1.833	259.42
8-10	10	6	8.5	10.5	9	9	4.5	9	12	12	2'-10	3'-7	2'-4	2'-6	3'-7	2'-4	.641	.794	.467	1.902	290.29
11-13	10	6	10	12	9	9	7.5	9	18	18	2'-6	3'-9	2'-5	2'-8	3'-9	2'-4	.744	.900	.467	2.111	298.26
14-16	10	6	11	13	9	9	4.5	9	12	12	2'-8	3'-8	2'-5	2'-8	3'-7	2'-5	.813	.970	.467	2.250	295.97
17-19	10	6	12.5	14.5	9	9	4.5	9	12	12	2'-9	3'-8	2'-6	2'-8	3'-8	2'-5	.916	1.075	.467	2.458	299.68
20-22	10	6	13.5	15.5	9	9	4.5	9	12	12	2'-8	3'-9	2'-7	2'-7	3'-8	2'-6	.985	1.145	.467	2.597	300.00
23-25	10	6	15	17	9	9	4.5	9	12	12	2'-7	3'-10	2'-8	2'-6	3'-10	2'-7	1.088	1.251	.467	2.806	309.34

* THESE DIMENSIONS ARE CORRECT FOR 38' LONG STANDARD SECTIONS ONLY. DIMENSIONS MUST BE RECALCULATED FOR ALL OTHER SECTION LENGTHS.

NOTES:

1. SEE DRAWING TWRCB-GI-87 FOR GENERAL INFORMATION, SPECIFICATIONS, AND DESIGN STRESSES.

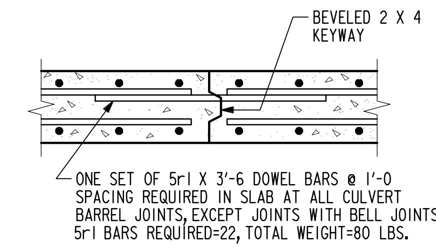

TOP SLAB CONSTRUCTION JOINT DETAIL

BENT BAR DETAIL

BARS	D
4	3
5	3¾
6	4½
7	5¼

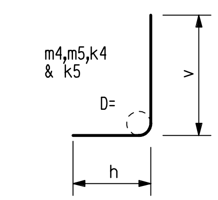

NOTE:
ALL DIMENSIONS ARE OUT TO OUT.
D = PIN DIAMETER.

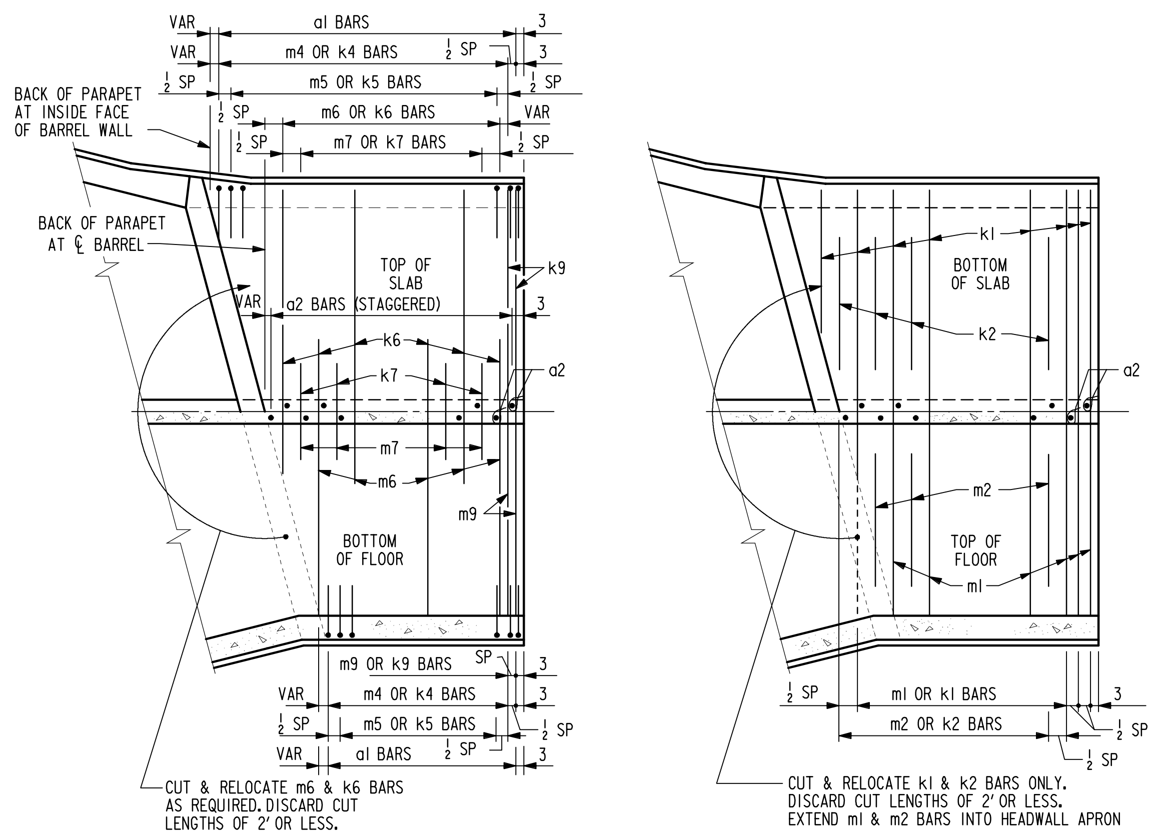

END SECTION - PLAN VIEW (KEYWAY NOT SHOWN)

NOTE: END SECTION DETAILS SHOWN ARE FOR A 15° SKEW BARREL. USE FOR SKEWS OF 30° & 45° BY INCREASING THE NUMBER OF TRANSVERSE REINFORCING BARS REQUIRED TO BE CUT & RELOCATED.

NOTE: ALL LONGITUDINAL BARREL STEEL SHALL EXTEND AT LEAST TO THE BACKFACE OF PARAPET.

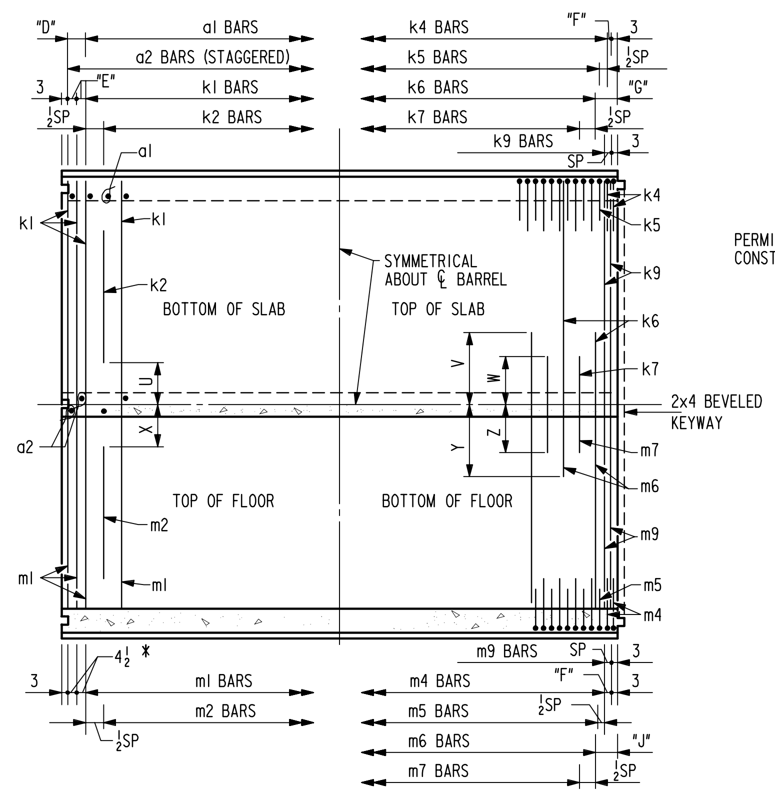

STANDARD SECTION PLAN VIEW

NOTE: TYPICAL FOR LENGTHS OF 38'.
(KEYWAY IS TO BE OMITTED WHEN BELL JOINTS ARE USED)

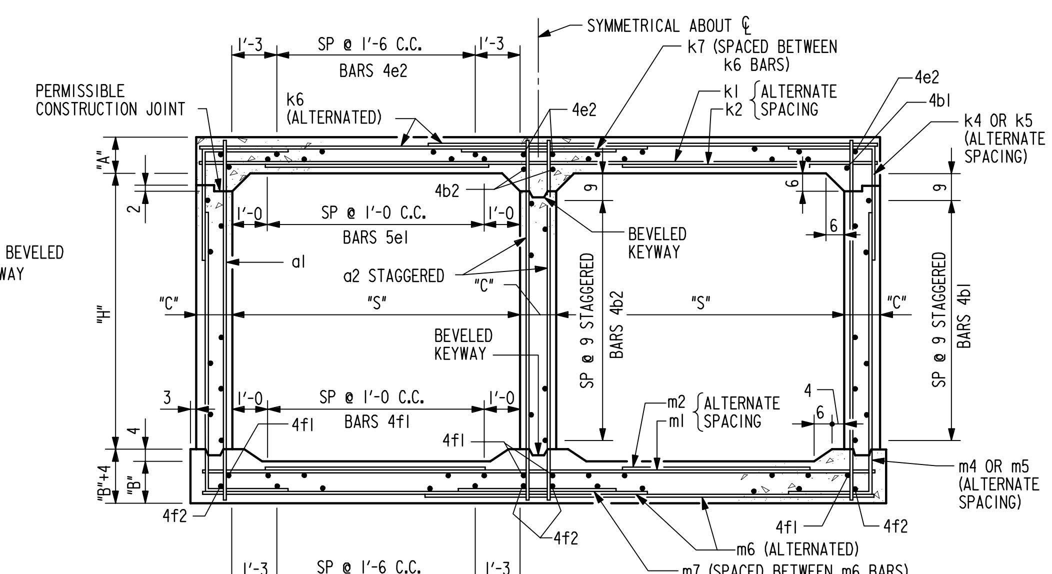

BARREL SECTION

STANDARD DESIGN

CULVERT BARREL DETAILS

FOR

TWIN REINFORCED CONCRETE BOX CULVERTS

IOWA DEPARTMENT OF TRANSPORTATION - HIGHWAY DIVISION

LATEST REVISION DATE: 12-5-96

APPROVED BY: William A. Lundquist

JULY, 1987

TWRCB 10-6-87

REVISED: 12/96; KEYWAY NOTATION CHANGED, DOWEL BAR LENGTH CHANGED.
TWRCB 10-6-87

VARIABLE DIMENSIONS AND QUANTITIES FOR BARREL SECTIONS

BAR LIST

FILL	a1 SIZE	a1 SP	a1 LENGTH	a2 SIZE	a2 SP	a2 LENGTH	b1 SIZE	b1 SP	b1 NO.	b2 SIZE	b2 SP	b2 NO.	e1 SIZE	e1 SP	e1 NO.	e2 SIZE	e2 SP	e2 NO.	f1 SIZE	f1 SP	f1 NO.	f2 SIZE	f2 SP	f2 NO.
0	5	12	9'-8	6	7.5	9'-8	4	9	22	4	9	12	5	12	18	4	18	16	4	12	22	4	18	16
1	4	6	9'-9	6	7.5	9'-9	4	9	22	4	9	12	5	12	18	4	18	16	4	12	22	4	18	16
2	5	12	9'-5	6	7.5	9'-5	4	9	22	4	9	12	5	12	18	4	18	16	4	12	22	4	18	16
3	4	9	9'-5	5	6	9'-5	4	9	22	4	9	12	5	12	18	4	18	16	4	12	22	4	18	16
4	4	9	9'-5	5	6	9'-5	4	9	22	4	9	12	5	12	18	4	18	16	4	12	22	4	18	16
5-7	4	12	9'-5	5	6	9'-5	4	9	22	4	9	12	5	12	18	4	18	16	4	12	22	4	18	16
8-10	4	9	9'-6	5	6	9'-6	4	9	22	4	9	12	5	12	18	4	18	16	4	12	22	4	18	16
11-13	4	9	9'-8	5	6	9'-8	4	9	22	4	9	12	5	12	18	4	18	16	4	12	22	4	18	16
14-16	6	9	9'-11	5	6	9'-11	4	9	22	4	9	12	5	12	18	4	18	16	4	12	22	4	18	16
17-19	6	9	10'-1	5	6	10'-1	4	9	22	4	9	12	5	12	18	4	18	16	4	12	22	4	18	16
20-22	6	9	10'-4	5	6	10'-4	4	9	22	4	9	12	5	12	18	4	18	16	4	12	22	4	18	16
23-25	6	9	10'-6	5	6	10'-6	4	9	22	4	9	12	5	12	18	4	18	16	4	12	22	4	18	16

FILL	k1 SIZE	k1 SP	k1 LENGTH	k2 SIZE	k2 SP	k2 LENGTH	k4 SIZE	k4 SP	k4 LENGTH	k4 h	k4 v	k5 SIZE	k5 SP	k5 LENGTH	k5 h	k5 v	k6 SIZE	k6 SP	k6 LENGTH	k7 SIZE	k7 SP	k7 LENGTH	k9 SIZE	k9 SP*	k9 LENGTH
0	5	12	22'-2	5	12	8'-1	4	12	4'-11	1'-9	3'-2	5	12	4'-11	1'-9	3'-2	4	12	22'-2	4	12	4'-11	4	4.5	22'-2
1	5	12	22'-2	5	12	8'-0	4	12	4'-11	1'-9	3'-2	5	12	4'-11	1'-9	3'-2	5	15	18'-2	5	15	4'-8	5	7.5	22'-2
2	5	12	22'-2	6	12	8'-3	5	12	5'-4	2'-4	3'-0	5	12	4'-10	1'-10	3'-0	5	12	16'-8	6	12	5'-6	5	4.5	22'-2
3	4	9	22'-2	4	9	6'-7	4	9	5'-0	2'-1	2'-11	4	9	4'-9	1'-10	2'-11	5	12	15'-3	5	12	4'-7	5	4.5	22'-2
4	4	12	22'-2	5	12	7'-1	4	9	4'-11	2'-0	2'-11	4	9	4'-9	1'-10	2'-11	5	12	14'-11	5	12	4'-5	5	4.5	22'-2
5-7	4	12	22'-2	5	12	7'-0	5	12	5'-0	2'-1	2'-11	5	12	4'-9	1'-10	2'-11	5	12	14'-9	6	12	5'-0	5	4.5	22'-2
8-10	4	12	22'-2	5	12	6'-3	4	9	5'-1	1'-10	3'-3	5	9	5'-4	2'-1	3'-3	6	12	14'-8	6	12	4'-7	6	4.5	22'-2
11-13	4	12	22'-2	5	12	6'-6	4	9	5'-1	1'-9	3'-4	5	9	5'-4	2'-0	3'-4	5	9	14'-8	6	9	4'-10	5	4.5	22'-2
14-16	4	12	22'-2	5	12	6'-8	4	9	4'-11	1'-9	3'-2	4	9	4'-11	1'-9	3'-2	7	15	14'-10	7	15	4'-11	7	7.5	22'-2
17-19	4	9	22'-2	5	9	7'-2	4	9	5'-1	1'-10	3'-3	4	9	4'-11	1'-8	3'-3	6	12	14'-10	7	12	5'-3	6	4.5	22'-2
20-22	4	9	22'-2	5	9	7'-6	4	9	5'-4	1'-11	3'-5	4	9	5'-1	1'-8	3'-5	5	9	14'-8	6	9	5'-0	5	4.5	22'-2
23-25	4	9	22'-2	5	9	7'-9	4	9	5'-6	2'-0	3'-6	4	9	5'-2	1'-8	3'-6	6	12	14'-10	7	12	5'-4	6	4.5	22'-2

FILL	m1 SIZE	m1 SP	m1 LENGTH	m2 SIZE	m2 SP	m2 LENGTH	m4 SIZE	m4 SP	m4 LENGTH	m4 h	m4 v	m5 SIZE	m5 SP	m5 LENGTH	m5 h	m5 v	m6 SIZE	m6 SP	m6 LENGTH	m7 SIZE	m7 SP	m7 LENGTH	m9 SIZE	m9 SP*	m9 LENGTH	FILL
0	4	12	22'-8	5	12	6'-9	5	12	9'-10	1'-8	8'-2	5	12	9'-10	1'-8	8'-2	5	12	22'-8	5	12	3'-10	5	4.5	22'-8	0
1	4	12	22'-8	5	12	6'-11	5	12	10'-1	1'-11	8'-2	5	12	9'-10	1'-8	8'-2	5	12	16'-3	5	12	4'-0	5	4.5	22'-8	1
2	5	12	22'-8	5	12	6'-6	5	12	10'-1	2'-0	8'-1	5	12	9'-9	1'-8	8'-1	5	9	15'-7	5	9	4'-1	5	4.5	22'-8	2
3	4	12	22'-8	5	12	7'-0	4	9	10'-0	1'-11	8'-1	4	9	9'-9	1'-8	8'-1	4	9	15'-1	5	9	4'-7	4	4.5	22'-8	3
4	4	12	22'-8	5	12	6'-11	4	9	10'-0	1'-11	8'-1	4	9	9'-9	1'-8	8'-1	4	9	14'-11	5	9	4'-7	4	4.5	22'-8	4
5-7	4	12	22'-8	5	12	6'-1	5	12	10'-0	1'-11	8'-1	5	12	9'-9	1'-8	8'-1	5	9	14'-9	5	9	4'-0	5	4.5	22'-8	5-7
8-10	5	9	22'-8	5	9	6'-11	4	9	10'-2	1'-10	8'-4	5	9	10'-3	1'-11	8'-4	5	9	14'-10	6	9	4'-8	5	4.5	22'-8	8-10
11-13	4	9	22'-8	5	9	7'-0	4	9	10'-2	1'-8	8'-6	5	9	10'-5	1'-11	8'-6	5	9	14'-11	6	9	4'-9	5	4.5	22'-8	11-13
14-16	5	9	22'-8	5	9	7'-2	4	9	10'-0	1'-8	8'-4	4	9	10'-0	1'-8	8'-4	5	9	14'-11	6	9	4'-11	5	4.5	22'-8	14-16
17-19	4	9	22'-8	5	9	7'-4	4	9	10'-2	1'-8	8'-6	4	9	10'-2	1'-8	8'-6	5	9	14'-11	6	9	4'-11	5	4.5	22'-8	17-19
20-22	4	9	22'-8	5	9	7'-7	4	9	10'-4	1'-9	8'-7	4	9	10'-3	1'-8	8'-7	5	9	14'-11	6	9	5'-1	5	4.5	22'-8	20-22
23-25	7	18	7'-10	4	9	10'-6	1'-10	8'-8	4	9	10'-4	1'-8	8'-8	5	9	15'-1	6	9	5'-4	5	4.5	22'-8	23-25			

DIMENSIONS

FILL	S	H	A	B	C	D*	E*	F*	G*	J*	U	V	W	X	Y	Z
0	10	8	10.5	10.5	10	9	4.5	9	12	12	1'-10	11'-1	2'-6	2'-6	11'-4	1'-11
1	10	8	11	11	10	6	4.5	9	18	12	1'-11	7'-1	2'-4	2'-6	4'-11	2'-0
2	10	8	8.5	10	10	9	4.5	9	12	12	1'-8	5'-7	2'-9	2'-7	4'-3	2'-0
3	10	8	8	10	10	9	4.5	4.5	12	12	2'-6	4'-2	2'-3	2'-4	3'-9	2'-4
4	10	8	8	10	10	9	4.5	4.5	12	12	2'-3	3'-10	2'-3	2'-5	3'-7	2'-3
5-7	10	8	8	10	10	9	4.5	9	12	12	2'-5	3'-8	2'-6	2'-11	3'-5	2'-0
8-10	10	8	8.5	10.5	10	9	4.5	4.5	12	12	2'-11	3'-7	2'-4	2'-6	3'-6	2'-4
11-13	10	8	9.5	12	10	9	4.5	4.5	12	12	2'-11	3'-7	2'-5	2'-8	3'-7	2'-5
14-16	10	8	11	13	10	9	4.5	4.5	18	12	2'-11	3'-9	2'-5	2'-8	3'-7	2'-5
17-19	10	8	12	14.5	10	9	4.5	4.5	12	12	2'-9	3'-9	2'-7	2'-8	3'-7	2'-6
20-22	10	8	13.5	15.5	10	9	4.5	4.5	12	12	2'-8	3'-7	2'-6	2'-7	3'-7	2'-6
23-25	10	6	14.5	17	10	9	4.5	4.5	12	12	2'-7	3'-9	2'-8	2'-6	3'-9	2'-8

FILL	QUANTITIES CONCRETE YD³/FT SLAB	FLOOR	WALLS	TOTAL	STEEL LBS/FT
0	.791	.805	.703	2.299	296.47
1	.826	.841	.703	2.370	297.82
2	.652	.770	.703	2.125	324.08
3	.617	.770	.703	2.090	270.50
4	.617	.770	.703	2.090	267.74
5-7	.617	.770	.703	2.090	289.37
8-10	.652	.805	.703	2.160	322.68
11-13	.721	.912	.703	2.336	324.58
14-16	.826	.983	.703	2.512	335.53
17-19	.895	1.089	.703	2.687	339.37
20-22	.999	1.160	.703	2.862	340.21
23-25	1.069	1.267	.703	3.039	352.47

* THESE DIMENSIONS ARE CORRECT FOR 38' LONG STANDARD SECTIONS ONLY. DIMENSIONS MUST BE RECALCULATED FOR ALL OTHER SECTION LENGTHS.

NOTES:

1. SEE DRAWING TWRCB-G1-87 FOR GENERAL INFORMATION, SPECIFICATIONS, AND DESIGN STRESSES.

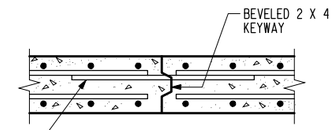

TOP SLAB CONSTRUCTION JOINT DETAIL

BENT BAR DETAIL

BARS	D
4	3
5	3¾
6	4½
7	5¼

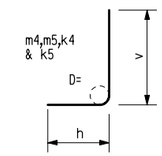

NOTE:
ALL DIMENSIONS ARE OUT TO OUT.
D = PIN DIAMETER.

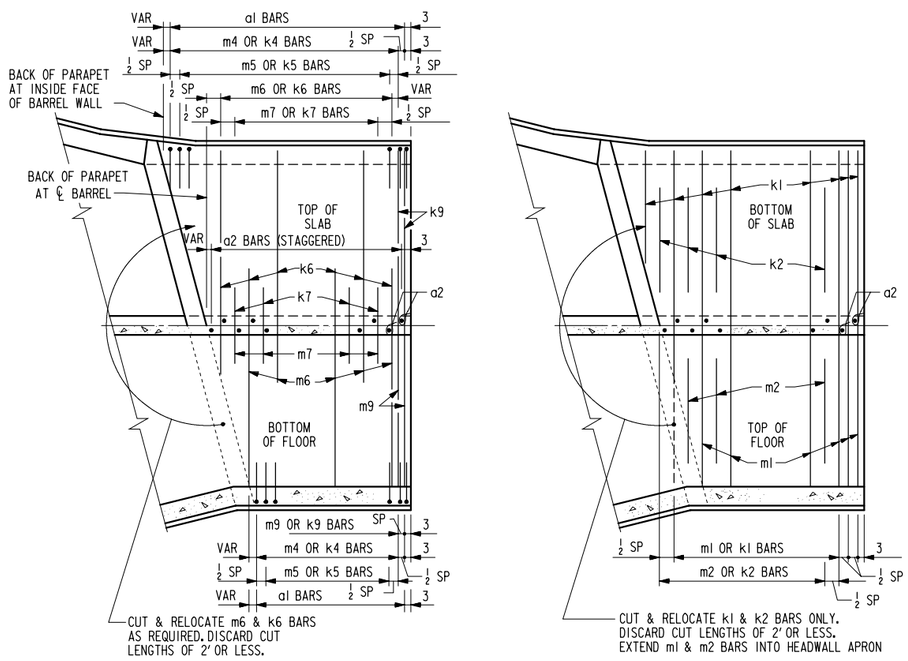

END SECTION - PLAN VIEW (KEYWAY NOT SHOWN)

NOTE: END SECTION DETAILS SHOWN ARE FOR A 15° SKEW BARREL. USE FOR SKEWS OF 30° & 45° BY INCREASING THE NUMBER OF TRANSVERSE REINFORCING BARS REQUIRED TO BE CUT & RELOCATED.

NOTE : ALL LONGITUDINAL BARREL STEEL SHALL EXTEND AT LEAST TO THE BACKFACE OF PARAPET.

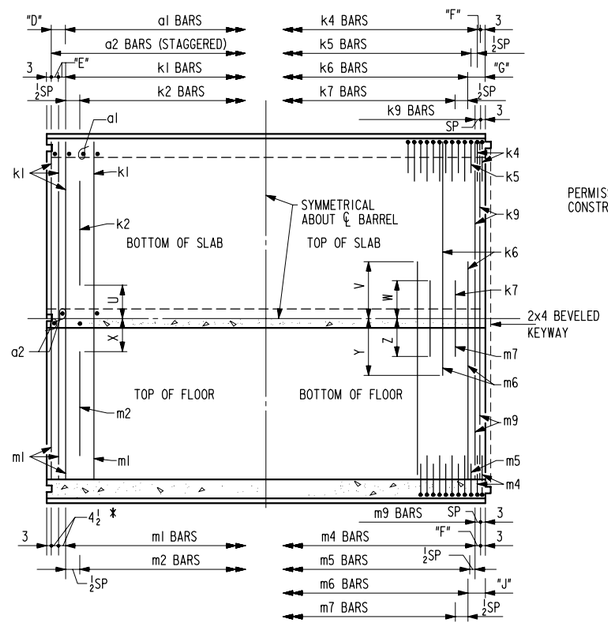

STANDARD SECTION PLAN VIEW

NOTE: TYPICAL FOR LENGTHS OF 38'.
(KEYWAY IS TO BE OMITTED WHEN BELL JOINTS ARE USED)

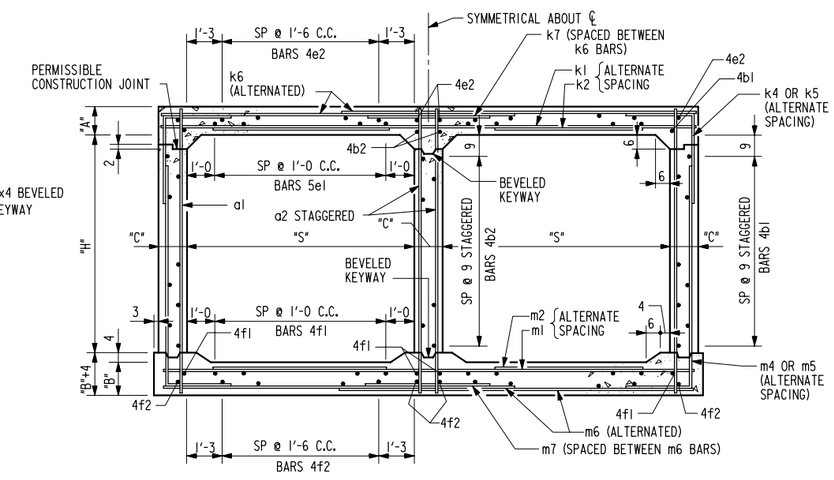

BARREL SECTION

LATEST REVISION DATE : 12-5-96

APPROVED BY : William A. Dougherty

STANDARD DESIGN

CULVERT BARREL DETAILS

FOR

TWIN REINFORCED CONCRETE BOX CULVERTS

IOWA DEPARTMENT OF TRANSPORTATION - HIGHWAY DIVISION

JULY , 1987

TWRCB 10-8-87

REVISED : 12/96 ; KEYWAY NOTATION CHANGED, DOWEL BAR LENGTH CHANGED.
TWRCB 10-8-87

VARIABLE DIMENSIONS AND QUANTITIES FOR BARREL SECTIONS

BAR LIST

FILL	a1 SIZE	a1 SP	a1 LENGTH	a2 SIZE	a2 SP	a2 LENGTH	b1 SIZE	b1 SP	b1 NO.	b2 SIZE	b2 SP	b2 NO.	e1 SIZE	e1 SP	e1 NO.	e2 SIZE	e2 SP	e2 NO.	f1 SIZE	f1 SP	f1 NO.	f2 SIZE	f2 SP	f2 NO.
0	5	12	11'-8	6	7.5	11'-8	4	9	28	4	9	15	5	12	18	4	18	16	4	12	22	4	18	16
1	4	6	11'-9	6	7.5	11'-9	4	9	28	4	9	15	5	12	18	4	18	16	4	12	22	4	18	16
2	4	9	11'-5	6	7.5	11'-5	4	9	28	4	9	15	5	12	18	4	18	16	4	12	22	4	18	16
3	4	12	11'-5	5	6	11'-5	4	9	28	4	9	15	5	12	18	4	18	16	4	12	22	4	18	16
4	4	12	11'-5	5	6	11'-5	4	9	28	4	9	15	5	12	18	4	18	16	4	12	22	4	18	16
5-7	5	12	11'-5	5	6	11'-5	4	9	28	4	9	15	5	12	18	4	18	16	4	12	22	4	18	16
8-10	6	9	11'-6	5	6	11'-6	4	9	28	4	9	15	5	12	18	4	18	16	4	12	22	4	18	16
11-13	4	9	11'-9	5	6	11'-9	4	9	28	4	9	15	5	12	18	4	18	16	4	12	22	4	18	16
14-16	4	9	11'-11	5	6	11'-11	4	9	28	4	9	15	5	12	18	4	18	16	4	12	22	4	18	16
17-19	4	6	12'-2	5	6	12'-2	4	9	28	4	9	15	5	12	18	4	18	16	4	12	22	4	18	16
20-22	4	6	12'-4	5	6	12'-4	4	9	28	4	9	15	5	12	18	4	18	16	4	12	22	4	18	16
23-25	4	6	12'-7	5	6	12'-7	4	9	28	4	9	15	5	12	18	4	18	16	4	12	22	4	18	16

FILL	k1 SIZE	k1 SP	k1 LENGTH	k2 SIZE	k2 SP	k2 LENGTH	k4 SIZE	k4 SP	k4 LENGTH	k4 h	k4 v	k5 SIZE	k5 SP	k5 LENGTH	k5 h	k5 v	k6 SIZE	k6 SP	k6 LENGTH	k7 SIZE	k7 SP	k7 LENGTH	k9 SIZE	k9 SP*	k9 LENGTH
0	5	12	22'-2	5	12	8'-2	4	12	4'-11	1'-9	3'-2	5	12	4'-11	1'-9	3'-2	4	12	22'-2	4	12	5'-0	4	4.5	22'-2
1	5	12	22'-2	5	12	8'-1	4	12	4'-11	1'-9	3'-2	5	12	4'-11	1'-9	3'-2	5	15	22'-2	5	15	4'-8	5	7.5	22'-2
2	4	9	11'-5	6	7.5	11'-5	4	9	5'-6	2'-3	3'-3	5	9	5'-4	2'-1	3'-3	5	12	17'-1	6	12	5'-6	5	4.5	22'-2
3	4	12	11'-5	5	6	11'-5	4	12	5'-3	2'-4	2'-11	5	12	4'-9	1'-10	2'-11	5	12	15'-5	5	12	4'-7	5	4.5	22'-2
4	5	12	22'-2	5	12	7'-2	5	12	5'-2	2'-3	2'-11	5	12	4'-9	1'-10	2'-11	5	12	15'-0	5	12	4'-6	5	4.5	22'-2
5-7	5	12	22'-2	5	12	7'-1	5	12	5'-2	2'-3	2'-11	5	12	4'-9	1'-10	2'-11	5	12	14'-9	6	12	5'-0	5	4.5	22'-2
8-10	5	12	22'-2	5	12	6'-4	4	9	4'-10	1'-10	3'-0	4	9	4'-10	1'-10	3'-0	6	12	14'-8	6	12	4'-7	6	4.5	22'-2
11-13	5	12	22'-2	5	12	6'-6	5	12	5'-1	1'-10	3'-3	6	12	5'-2	1'-11	3'-3	6	12	14'-8	6	12	4'-8	6	4.5	22'-2
14-16	5	12	22'-2	5	12	6'-8	5	12	5'-1	1'-9	3'-4	6	12	5'-3	1'-11	3'-4	7	15	14'-10	7	15	4'-11	7	7.5	22'-2
17-19	5	12	6'-10	5	12	5'-4	5	12	5'-4	1'-10	3'-6	6	12	5'-4	1'-10	3'-6	7	15	14'-10	7	15	4'-11	7	7.5	22'-2
20-22	5	12	7'-1	5	12	5'-6	5	12	5'-6	1'-11	3'-7	6	12	5'-5	1'-10	3'-7	5	9	14'-8	6	9	5'-0	5	4.5	22'-2
23-25	5	9	7'-9	5	9	6'-2	5	9	6'-2	2'-5	3'-9	5	9	6'-2	2'-5	3'-9	5	9	14'-9	6	9	5'-3	5	4.5	22'-2

FILL	m1 SIZE	m1 SP	m1 LENGTH	m2 SIZE	m2 SP	m2 LENGTH	m4 SIZE	m4 SP	m4 LENGTH	m4 h	m4 v	m5 SIZE	m5 SP	m5 LENGTH	m5 h	m5 v	m6 SIZE	m6 SP	m6 LENGTH	m7 SIZE	m7 SP	m7 LENGTH	m9 SIZE	m9 SP*	m9 LENGTH	FILL
0	4	12	22'-8	5	12	6'-11	5	12	11'-10	1'-8	10'-2	5	12	11'-10	1'-8	10'-2	5	12	22'-8	5	12	3'-11	5	4.5	22'-8	0
1	4	12	22'-8	5	12	7'-1	5	12	11'-11	1'-8	10'-3	5	12	11'-11	1'-8	10'-3	5	12	22'-8	5	12	3'-11	5	4.5	22'-8	1
2	4	9	12'-2	5	9	7'-1	4	9	12'-2	1'-10	10'-4	5	9	12'-3	1'-11	10'-4	5	9	15'-8	5	9	4'-2	5	4.5	22'-8	2
3	5	12	22'-8	5	12	7'-2	5	12	12'-5	2'-4	10'-1	5	12	11'-9	1'-8	10'-1	4	9	15'-1	5	9	4'-8	4	4.5	22'-8	3
4	4	12	22'-8	5	12	7'-1	5	12	12'-4	2'-3	10'-1	5	12	11'-9	1'-8	10'-1	4	9	14'-11	5	9	4'-8	4	4.5	22'-8	4
5-7	5	12	22'-8	5	12	6'-3	5	12	12'-2	2'-1	10'-1	5	12	11'-9	1'-8	10'-1	5	9	14'-9	5	9	4'-1	5	4.5	22'-8	5-7
8-10	5	12	22'-8	5	12	6'-6	4	9	12'-0	1'-10	10'-2	4	9	11'-10	1'-8	10'-2	6	12	14'-11	6	12	4'-6	6	4.5	22'-8	8-10
11-13	5	9	7'-1	5	12	12'-3	5	12	12'-3	1'-10	10'-5	6	12	12'-3	1'-10	10'-5	7	15	15'-1	7	15	4'-9	7	7.5	22'-8	11-13
14-16	5	9	7'-2	5	12	12'-4	1'-9	10'-7	6	12	12'-5	1'-10	10'-7	7	15	15'-1	7	15	4'-10	7	7.5	22'-8	14-16
17-19	5	9	7'-4	5	12	12'-7	1'-11	10'-8	6	12	12'-6	1'-10	10'-8	5	9	14'-11	6	9	4'-11	5	4.5	22'-8	17-19
20-22	5	9	7'-7	5	12	12'-7	1'-10	10'-9	6	12	12'-7	1'-10	10'-9	7	15	15'-1	7	15	4'-11	7	7.5	22'-8	20-22
23-25	5	9	7'-10	5	9	12'-11	2'-0	10'-11	5	9	15'-1	6	9	5'-4	5	4.5	22'-8	23-25

DIMENSIONS

FILL	S	H	A	B	C	D*	E*	F*	G*	J*	U	V	W	X	Y	Z
0	10	10	10.5	10.5	10	9	4.5	9	12	12	1'-9	11'-1	2'-6	2'-5	11'-4	1'-11
1	10	10	11	11.5	10	6	4.5	9	18	12	1'-10	11'-1	2'-4	2'-5	11'-4	1'-11
2	10	10	8.5	10	10	9	4.5	4.5	12	12	2'-2	6'-0	2'-9	2'-4	4'-4	2'-1
3	10	10	8	10	10	9	4.5	9	12	12	2'-6	4'-4	2'-4	2'-3	3'-9	2'-4
4	10	10	8	10	10	9	4.5	9	12	12	2'-3	3'-11	2'-3	2'-4	3'-7	2'-4
5-7	10	10	8	10	10	9	4.5	9	12	12	2'-4	3'-8	2'-6	2'-9	3'-5	2'-1
8-10	10	10	8.5	11	10	9	4.5	4.5	12	12	2'-10	3'-7	2'-4	2'-10	3'-7	2'-3
11-13	10	10	10	12	10	9	4.5	9	12	18	2'-11	3'-7	2'-4	2'-7	3'-9	2'-5
14-16	10	10	11	13.5	10	9	4.5	9	18	18	2'-11	3'-9	2'-5	2'-8	3'-9	2'-5
17-19	10	10	12.5	14.5	10	6	4.5	9	18	12	2'-11	3'-9	2'-6	2'-7	3'-7	2'-6
20-22	10	10	13.5	16	10	6	4.5	9	12	18	2'-9	3'-7	2'-6	2'-7	3'-9	2'-6
23-25	10	10	15	17	10	6	4.5	4.5	12	12	2'-6	3'-8	2'-7	2'-6	3'-9	2'-8

FILL	QUANTITIES CONCRETE YD³/FT SLAB	FLOOR	WALLS	TOTAL	STEEL LBS/FT
0	.791	.805	.889	2.485	320.45
1	.826	.876	.889	2.591	332.11
2	.652	.770	.889	2.311	357.76
3	.617	.770	.889	2.276	304.08
4	.617	.770	.889	2.276	295.24
5-7	.617	.770	.889	2.276	320.58
8-10	.652	.841	.889	2.382	351.47
11-13	.756	.912	.889	2.557	359.55
14-16	.826	1.018	.889	2.733	365.45
17-19	.930	1.089	.889	2.908	375.63
20-22	.999	1.196	.889	3.084	378.66
23-25	1.103	1.267	.889	3.259	395.92

* THESE DIMENSIONS ARE CORRECT FOR 38' LONG STANDARD SECTIONS ONLY. DIMENSIONS MUST BE RECALCULATED FOR ALL OTHER SECTION LENGTHS.

NOTES:

1. SEE DRAWING TWRCB-G1-87 FOR GENERAL INFORMATION, SPECIFICATIONS, AND DESIGN STRESSES.

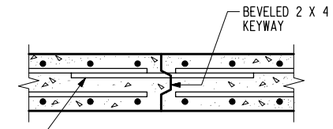

TOP SLAB CONSTRUCTION JOINT DETAIL

BENT BAR DETAIL

BARS	D
4	3
5	3¾
6	4½
7	5¼

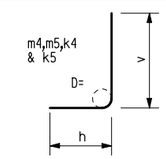

NOTE:
ALL DIMENSIONS ARE OUT TO OUT.
D = PIN DIAMETER.

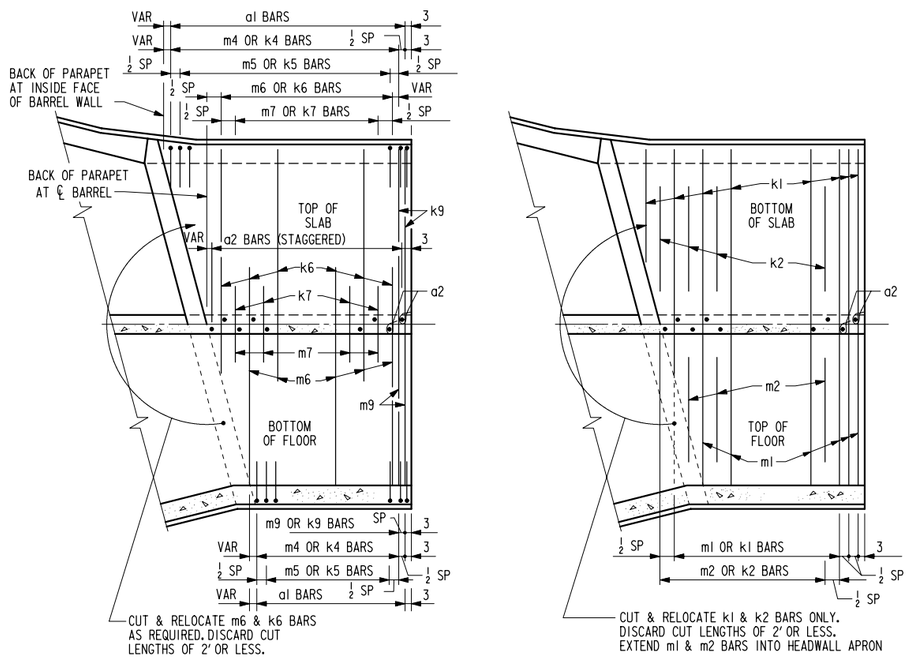

END SECTION - PLAN VIEW (KEYWAY NOT SHOWN)

NOTE: END SECTION DETAILS SHOWN ARE FOR A 15° SKEW BARREL. USE FOR SKEWS OF 30° & 45° BY INCREASING THE NUMBER OF TRANSVERSE REINFORCING BARS REQUIRED TO BE CUT & RELOCATED.

NOTE : ALL LONGITUDINAL BARREL STEEL SHALL EXTEND AT LEAST TO THE BACKFACE OF PARAPET.

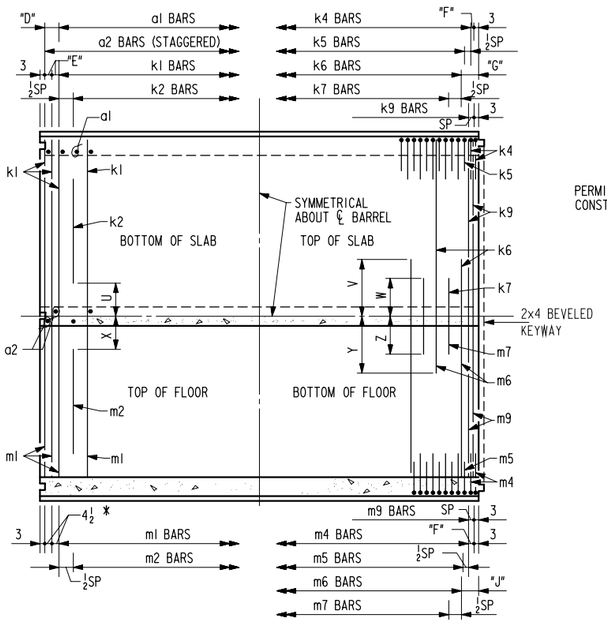

STANDARD SECTION PLAN VIEW

NOTE: TYPICAL FOR LENGTHS OF 38'.
(KEYWAY IS TO BE OMITTED WHEN BELL JOINTS ARE USED)

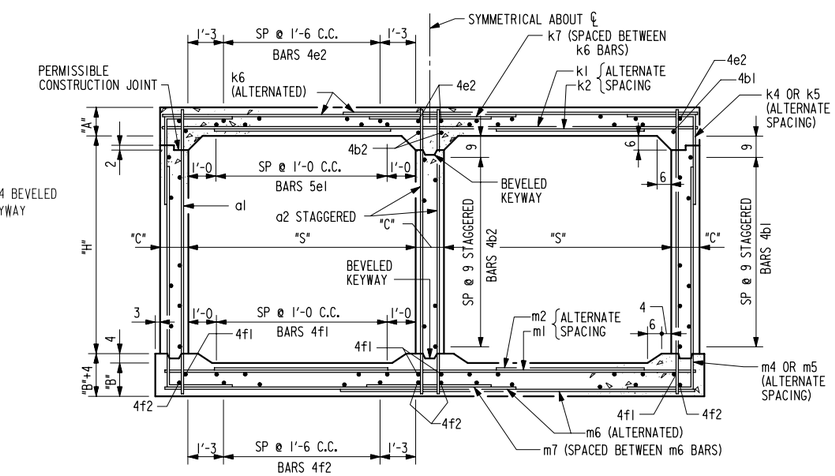

BARREL SECTION

LATEST REVISION DATE : 12-5-96

APPROVED BY : William A. Dougherty

STANDARD DESIGN

CULVERT BARREL DETAILS

FOR
TWIN REINFORCED CONCRETE BOX CULVERTS

IOWA DEPARTMENT OF TRANSPORTATION - HIGHWAY DIVISION

JULY , 1987

TWRCB 10-10-87

REVISED: 12/96 ; KEYWAY NOTATION CHANGED, DOWEL BAR LENGTH CHANGED.
TWRCB 10-10-87

VARIABLE DIMENSIONS AND QUANTITIES FOR BARREL SECTIONS

BAR LIST

FILL	a1 SIZE	a1 SP	a1 LENGTH	a2 SIZE	a2 SP	a2 LENGTH	b1 SIZE	b1 SP	b1 NO.	b2 SIZE	b2 SP	b2 NO.	e1 SIZE	e1 SP	e1 NO.	e2 SIZE	e2 SP	e2 NO.	f1 SIZE	f1 SP	f1 NO.	f2 SIZE	f2 SP	f2 NO.	k1 SIZE	k1 SP	k1 LENGTH	k2 SIZE	k2 SP	k2 LENGTH
0	4	6	13'-8	7	9	13'-8	4	9	32	4	9	17	5	12	18	4	18	16	4	12	22	4	18	16	5	12	22'-8	5	12	8'-0
1	4	6	13'-9	7	9	13'-9	4	9	32	4	9	17	5	12	18	4	18	16	4	12	22	4	18	16	5	12	22'-8	5	12	7'-11
2	4	9	13'-6	7	9	13'-6	4	9	32	4	9	17	5	12	18	4	18	16	4	12	22	4	18	16	5	12	22'-8	6	12	8'-1
3	5	12	13'-5	7	9	13'-5	4	9	32	4	9	17	5	12	18	4	18	16	4	12	22	4	18	16	4	9	22'-8	4	9	6'-6
4	5	12	13'-5	7	9	13'-5	4	9	32	4	9	17	5	12	18	4	18	16	4	12	22	4	18	16	4	12	22'-8	5	12	7'-0
5-7	5	12	13'-5	7	9	13'-5	4	9	32	4	9	17	5	12	18	4	18	16	4	12	22	4	18	16	4	12	22'-8	5	12	6'-11
8-10	6	9	13'-6	7	9	13'-6	4	9	32	4	9	17	5	12	18	4	18	16	4	12	22	4	18	16	5	12	22'-8	5	12	6'-2
11-13	4	9	13'-8	7	9	13'-8	4	9	32	4	9	17	5	12	18	4	18	16	4	12	22	4	18	16	5	12	22'-8	5	12	6'-5
14-16	5	12	13'-11	7	9	13'-11	4	9	32	4	9	17	5	12	18	4	18	16	4	12	22	4	18	16	5	12	22'-8	5	12	6'-6
17-19	5	12	14'-1	7	9	14'-1	4	9	32	4	9	17	5	12	18	4	18	16	4	12	22	4	18	16	5	12	22'-8	5	12	6'-9
20-22	5	12	14'-3	7	9	14'-3	4	9	32	4	9	17	5	12	18	4	18	16	4	12	22	4	18	16	4	9	22'-8	5	9	7'-4
23-25	6	12	14'-6	7	9	14'-6	4	9	32	4	9	17	5	12	18	4	18	16	4	12	22	4	18	16	4	9	22'-8	5	9	7'-8

FILL	k4 SIZE	k4 SP	k4 LENGTH	k4 h	k4 v	k5 SIZE	k5 SP	k5 LENGTH	k5 h	k5 v	k6 SIZE	k6 SP	k6 LENGTH	k7 SIZE	k7 SP	k7 LENGTH	k9 SIZE	k9 SP*	k9 LENGTH	m1 SIZE	m1 SP	m1 LENGTH	m2 SIZE	m2 SP	m2 LENGTH
0	4	12	5'-1	1'-11	3'-2	5	12	5'-1	1'-11	3'-2	4	12	22'-8	4	12	4'-10	4	4.5	22'-8	4	12	23'-2	5	12	6'-9
1	4	12	5'-3	1'-11	3'-4	5	12	5'-3	1'-11	3'-4	4	12	22'-8	5	12	5'-3	4	4.5	22'-8	4	12	23'-2	5	12	6'-11
2	6	15	6'-11	3'-0	3'-11	6	15	6'-1	2'-2	3'-11	4	9	17'-2	5	9	5'-5	4	4.5	22'-8	4	9	23'-2	5	9	6'-10
3	5	12	5'-9	2'-10	2'-11	5	12	4'-11	2'-0	2'-11	5	12	15'-6	5	12	4'-7	5	4.5	22'-8	4	12	23'-2	5	12	7'-0
4	6	18	5'-11	2'-10	3'-1	6	18	5'-3	2'-2	3'-1	5	12	15'-2	5	12	4'-5	5	4.5	22'-8	4	12	23'-2	5	12	6'-11
5-7	5	12	5'-8	2'-9	2'-11	5	12	4'-11	2'-0	2'-11	4	9	14'-10	5	9	4'-11	4	4.5	22'-8	5	12	23'-2	5	12	6'-2
8-10	6	18	5'-10	2'-8	3'-2	6	18	5'-4	2'-2	3'-2	5	9	14'-9	5	9	4'-4	5	4.5	22'-8	5	12	23'-2	5	12	6'-5
11-13	7	18	6'-9	2'-9	4'-0	7	18	6'-7	2'-7	4'-0	6	12	14'-11	6	12	4'-8	6	4.5	22'-8	4	9	23'-2	5	9	7'-1
14-16	6	12	6'-6	2'-5	4'-1	6	12	6'-2	2'-1	4'-1	6	12	14'-11	6	12	4'-9	6	4.5	22'-8	4	9	23'-2	5	9	7'-1
17-19	6	12	5'-9	2'-4	3'-5	6	12	5'-5	2'-0	3'-5	7	15	15'-1	7	15	5'-0	7	7.5	22'-8	4	9	23'-2	5	9	7'-4
20-22	6	12	5'-10	2'-4	3'-6	6	12	5'-6	2'-0	3'-6	5	9	14'-11	6	9	5'-0	5	4.5	22'-8	4	9	23'-2	5	9	7'-6
23-25	6	12	6'-0	2'-4	3'-8	6	12	5'-8	2'-0	3'-8	5	9	15'-0	6	9	5'-2	5	4.5	22'-8	4	9	23'-2	5	9	7'-10

FILL	m4 SIZE	m4 SP	m4 LENGTH	m4 h	m4 v	m5 SIZE	m5 SP	m5 LENGTH	m5 h	m5 v	m6 SIZE	m6 SP	m6 LENGTH	m7 SIZE	m7 SP	m7 LENGTH	m9 SIZE	m9 SP*	m9 LENGTH	FILL
0	5	12	14'-2	2'-0	12'-2	5	12	14'-0	1'-10	12'-2	4	9	23'-2	4	9	3'-11	4	4.5	23'-2	0
1	5	12	14'-0	1'-11	12'-1	5	12	13'-11	1'-10	12'-1	5	12	15'-11	5	12	4'-0	5	4.5	23'-2	1
2	6	15	14'-2	2'-8	11'-6	6	15	13'-6	2'-0	11'-6	5	9	15'-6	5	9	4'-2	5	4.5	23'-2	2
3	5	12	14'-11	2'-10	12'-1	5	12	13'-11	1'-10	12'-1	4	9	15'-3	5	9	4'-8	4	4.5	23'-2	3
4	6	18	15'-2	2'-11	12'-3	6	18	14'-3	2'-0	12'-3	4	9	15'-1	5	9	4'-8	4	4.5	23'-2	4
5-7	5	12	14'-7	2'-6	12'-1	5	12	13'-11	1'-10	12'-1	5	9	15'-0	5	9	4'-2	5	4.5	23'-2	5-7
8-10	6	18	14'-11	2'-7	12'-4	6	18	14'-4	2'-0	12'-4	6	12	15'-2	6	12	4'-6	6	4.5	23'-2	8-10
11-13	7	18	15'-1	2'-8	12'-5	7	18	14'-10	2'-5	12'-5	5	9	15'-2	6	9	4'-10	5	4.5	23'-2	11-13
14-16	6	12	14'-2	2'-4	11'-10	6	12	13'-10	2'-0	11'-10	7	15	15'-4	7	15	4'-10	7	7.5	23'-2	14-16
17-19	6	12	15'-0	2'-4	12'-8	6	12	14'-8	2'-0	12'-8	7	15	15'-4	7	15	5'-0	7	7.5	23'-2	17-19
20-22	6	12	15'-0	2'-3	12'-9	6	12	14'-9	2'-0	12'-9	7	15	15'-4	7	15	5'-0	7	7.5	23'-2	20-22
23-25	6	12	15'-2	2'-4	12'-10	6	12	14'-10	2'-0	12'-10	7	15	15'-4	7	15	5'-1	7	7.5	23'-2	23-25

DIMENSIONS

FILL	S	H	A	B	C	D*	E*	F*	G*	J*	U	V	W	X	Y	Z	QUANTITIES: CONCRETE YD³/FT SLAB	FLOOR	WALLS	TOTAL	STEEL LBS/FT
0	10	12	10.5	11	12	6	4.5	9	12	12	1'-10	11'-4	2'-5	2'-6	11'-7	2'-0	.817	.859	1.291	2.967	351.16
1	10	12	11	11.5	12	6	4.5	9	12	12	1'-11	11'-4	2'-7	2'-5	4'-4	2'-0	.852	.896	1.291	3.039	351.79
2	10	12	9	10	12	9	4.5	7.5	12	12	1'-9	5'-10	2'-8	2'-5	3'-11	2'-1	.710	.787	1.291	2.788	386.50
3	10	12	8	10	12	9	4.5	9	12	12	2'-6	4'-2	2'-3	2'-4	3'-8	2'-4	.639	.787	1.291	2.717	339.82
4	10	12	8	10	12	9	4.5	9	12	12	2'-3	3'-10	2'-2	2'-4	3'-6	2'-4	.639	.787	1.291	2.717	337.58
5-7	10	12	8	10	12	9	4.5	9	12	12	2'-4	3'-6	2'-5	2'-10	3'-5	2'-1	.639	.787	1.291	2.717	349.97
8-10	10	12	8.5	11	12	9	4.5	9	12	12	2'-10	3'-5	2'-2	2'-9	3'-7	2'-3	.675	.859	1.291	2.825	396.32
11-13	10	12	9.5	12	12	9	4.5	9	12	12	2'-10	3'-7	2'-4	2'-6	3'-7	2'-5	.746	.932	1.291	2.969	409.84
14-16	10	12	11	13.5	12	9	4.5	9	12	18	2'-11	3'-7	2'-4	2'-8	3'-9	2'-5	.852	1.041	1.291	3.184	422.05
17-19	10	12	12	14.5	12	9	4.5	9	18	18	2'-10	3'-9	2'-6	2'-6	3'-9	2'-6	.923	1.113	1.291	3.327	428.61
20-22	10	12	13	15.5	12	9	4.5	9	12	18	2'-7	3'-7	2'-6	2'-7	3'-9	2'-6	.994	1.186	1.291	3.471	428.26
23-25	10	12	14.5	17	12	9	4.5	9	12	18	2'-6	3'-8	2'-7	2'-5	3'-9	2'-6	1.101	1.295	1.291	3.687	447.13

* THESE DIMENSIONS ARE CORRECT FOR 38' LONG STANDARD SECTIONS ONLY. DIMENSIONS MUST BE RECALCULATED FOR ALL OTHER SECTION LENGTHS.

NOTES:

1. SEE DRAWING TWRCB-GI-87 FOR GENERAL INFORMATION, SPECIFICATIONS, AND DESIGN STRESSES.

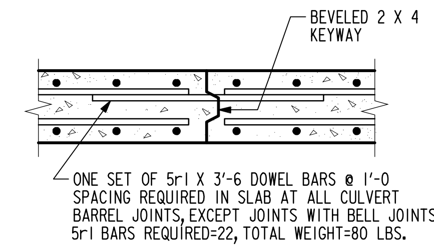

TOP SLAB CONSTRUCTION JOINT DETAIL

BENT BAR DETAIL

BARS	D
4	3
5	3¾
6	4½
7	5¼

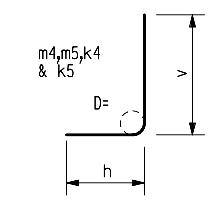

NOTE:
ALL DIMENSIONS ARE OUT TO OUT.
D = PIN DIAMETER.

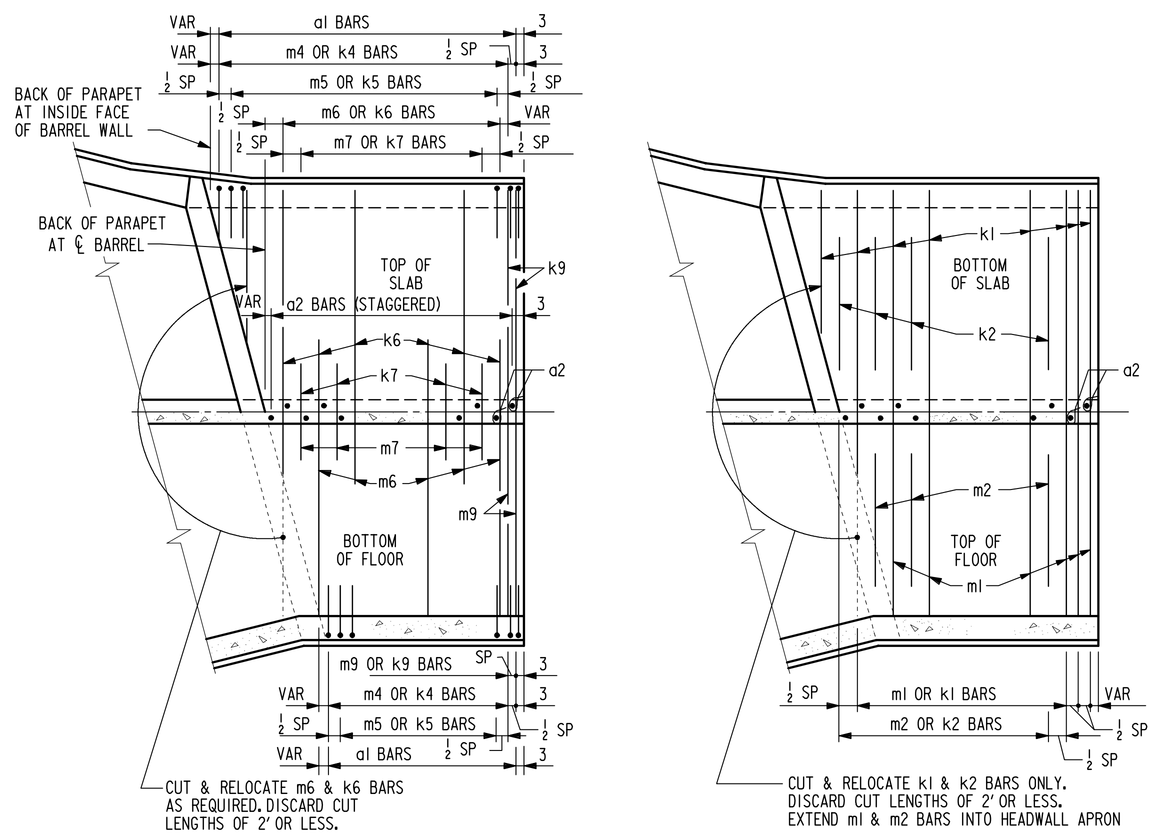

END SECTION - PLAN VIEW (KEYWAY NOT SHOWN)

NOTE: END SECTION DETAILS SHOWN ARE FOR A 15° SKEW BARREL. USE FOR SKEWS OF 30° & 45° BY INCREASING THE NUMBER OF TRANSVERSE REINFORCING BARS REQUIRED TO BE CUT & RELOCATED.

NOTE : ALL LONGITUDINAL BARREL STEEL SHALL EXTEND AT LEAST TO THE BACKFACE OF PARAPET.

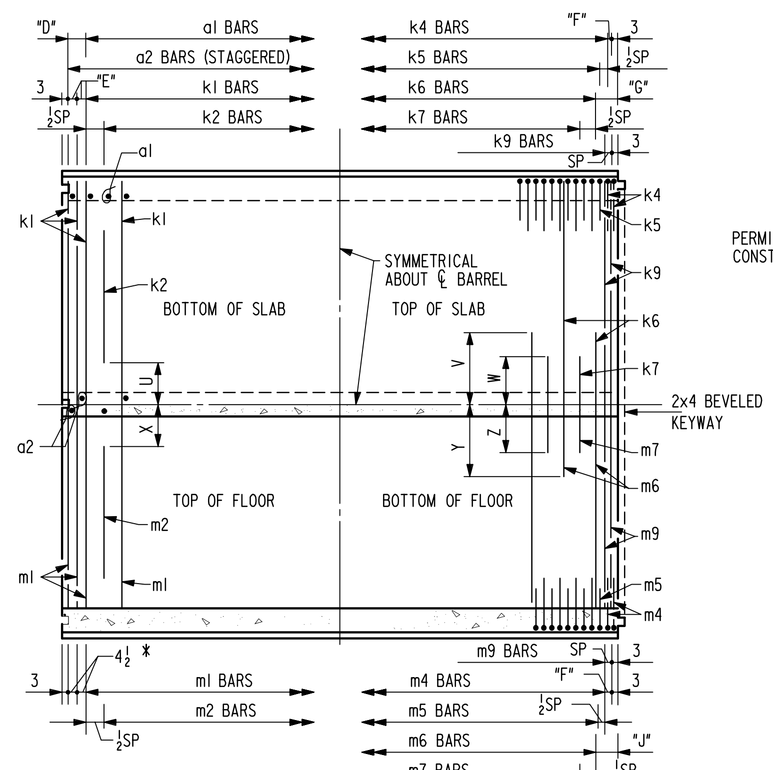

STANDARD SECTION PLAN VIEW

NOTE: TYPICAL FOR LENGTHS OF 38'.
(KEYWAY IS TO BE OMITTED WHEN BELL JOINTS ARE USED)

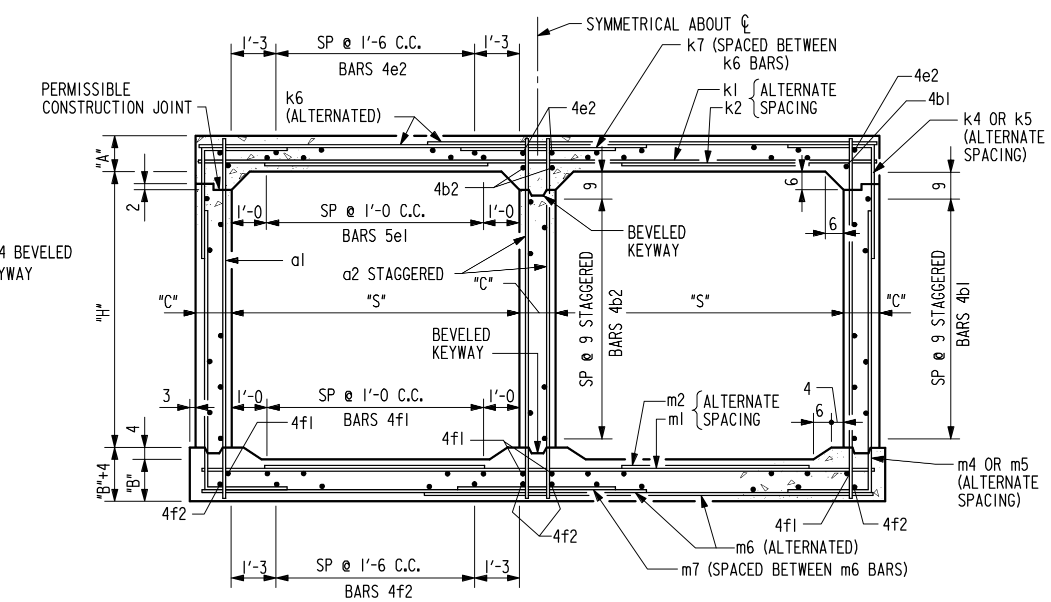

BARREL SECTION

LATEST REVISION DATE : 12-5-96

APPROVED BY : William A. Lundquist

STANDARD DESIGN

CULVERT BARREL DETAILS

FOR

TWIN REINFORCED CONCRETE BOX CULVERTS

IOWA DEPARTMENT OF TRANSPORTATION - HIGHWAY DIVISION

JULY , 1987

TWRCB 10-12-87

REVISED: 12/96 : KEYWAY NOTATION CHANGED, DOWEL BAR LENGTH CHANGED.
TWRCB 10-12-87

VARIABLE DIMENSIONS AND QUANTITIES FOR BARREL SECTIONS

BAR LIST

FILL	a1 SIZE	a1 SP	a1 LENGTH	a2 SIZE	a2 SP	a2 LENGTH	b1 SIZE	b1 SP	b1 NO.	b2 SIZE	b2 SP	b2 NO.	e1 SIZE	e1 SP	e1 NO.	e2 SIZE	e2 SP	e2 NO.	f1 SIZE	f1 SP	f1 NO.	f2 SIZE	f2 SP	f2 NO.
0	4	9	7'-8	5	4.5	7'-8	4	9	16	4	9	9	5	12	22	4	17	20	4	12	26	4	17	20
1	4	9	7'-10	5	4.5	7'-10	4	9	16	4	9	9	5	12	22	4	17	20	4	12	26	4	17	20
2	4	9	7'-6	5	4.5	7'-6	4	9	16	4	9	9	5	12	22	4	17	20	4	12	26	4	17	20
3	4	9	7'-5	5	4.5	7'-5	4	9	16	4	9	9	5	12	22	4	17	20	4	12	26	4	17	20
4	4	9	7'-5	4	4.5	7'-5	4	9	16	4	9	9	5	12	22	4	17	20	4	12	26	4	17	20
5-7	6	9	7'-6	4	4.5	7'-6	4	9	16	4	9	9	5	12	22	4	17	20	4	12	26	4	17	20
8-10	6	9	7'-9	4	4.5	7'-9	4	9	16	4	9	9	5	12	22	4	17	20	4	12	26	4	17	20
11-13	4	9	8'-0	4	4.5	8'-0	4	9	16	4	9	9	5	12	22	4	17	20	4	12	26	4	17	20
14-16	5	12	8'-3	4	4.5	8'-3	4	9	16	4	9	9	5	12	22	4	17	20	4	12	26	4	17	20
17-19	5	12	8'-7	4	4.5	8'-7	4	9	16	4	9	9	5	12	22	4	17	20	4	12	26	4	17	20
20-22	5	12	8'-10	4	4.5	8'-10	4	9	16	4	9	9	5	12	22	4	17	20	4	12	26	4	17	20
23-25	5	12	9'-0	4	4.5	9'-0	4	9	16	4	9	9	5	12	22	4	17	20	4	12	26	4	17	20

FILL	k1 SIZE	k1 SP	k1 NO.	k2 SIZE	k2 SP	k2 NO.	k4 SIZE	k4 SP	k4 LENGTH	k4 h	k4 v	k5 SIZE	k5 SP	k5 LENGTH	k5 h	k5 v	k6 SIZE	k6 SP	k6 LENGTH	k7 SIZE	k7 SP	k7 LENGTH	k9 SIZE	k9 SP*	k9 LENGTH
0	4	9	25'-11	5	9	10'-8	4	9	5'-1	1'-8	3'-5	5	9	5'-4	1'-11	3'-5	5	12	22'-4	5	12	5'-2	5	4.5	25'-11
1	4	9	25'-11	5	9	10'-4	4	9	5'-3	1'-9	3'-6	5	9	5'-4	1'-10	3'-6	5	15	20'-1	6	15	6'-4	5	7.5	25'-11
2	4	9	25'-11	6	9	9'-2	5	9	5'-4	2'-1	3'-3	5	9	5'-3	2'-0	3'-3	6	12	19'-2	7	12	6'-3	6	4.5	25'-11
3	4	9	25'-11	6	12	8'-8	4	9	5'-3	2'-1	3'-2	5	9	5'-2	2'-0	3'-2	5	9	17'-9	6	9	5'-7	5	4.5	25'-11
4	4	9	25'-11	5	9	8'-2	4	9	5'-2	2'-0	3'-2	5	9	5'-2	2'-0	3'-2	5	9	17'-5	6	9	5'-5	5	4.5	25'-11
5-7	6	9	25'-11	5	9	8'-0	4	9	4'-10	1'-10	3'-0	4	9	4'-9	1'-9	3'-0	6	12	17'-4	7	12	5'-8	6	4.5	25'-11
8-10	6	15	25'-11	6	15	7'-10	4	9	4'-9	1'-8	3'-1	4	9	4'-9	1'-8	3'-1	7	15	17'-5	8	15	5'-11	7	7.5	25'-11
11-13	6	12	25'-11	6	12	8'-5	4	9	5'-3	1'-9	3'-6	5	9	5'-4	1'-10	3'-6	7	12	17'-3	7	12	5'-2	7	4.5	25'-11
14-16	6	12	25'-11	6	12	8'-7	5	12	5'-3	1'-11	3'-4	5	12	4'-11	1'-7	3'-4	8	15	17'-5	8	15	5'-6	8	7.5	25'-11
17-19	6	12	25'-11	6	12	8'-11	5	12	5'-11	2'-5	3'-6	5	12	5'-6	2'-0	3'-6	7	12	17'-3	7	12	5'-4	7	4.5	25'-11
20-22	7	18	25'-11	7	18	8'-6	5	12	6'-3	2'-7	3'-8	5	12	5'-8	2'-0	3'-8	8	15	17'-5	8	15	6'-9	8	7.5	25'-11
23-25	7	18	25'-11	7	18	8'-9	5	12	6'-5	2'-8	3'-9	5	12	5'-9	2'-0	3'-9	8	15	17'-5	8	15	6'-9	8	7.5	25'-11

FILL	m1 SIZE	m1 SP	m1 LENGTH	m2 SIZE	m2 SP	m2 LENGTH	m4 SIZE	m4 SP	m4 LENGTH	m4 h	m4 v	m5 SIZE	m5 SP	m5 LENGTH	m5 h	m5 v	m6 SIZE	m6 SP	m6 LENGTH	m7 SIZE	m7 SP	m7 LENGTH	m9 SIZE	m9 SP*	m9 LENGTH	FILL
0	4	9	26'-5	4	9	7'-1	4	9	8'-0	1'-7	6'-5	5	9	8'-3	1'-10	6'-5	5	12	26'-5	5	12	4'-5	5	4.5	26'-5	0
1	5	12	26'-5	5	12	7'-1	4	9	8'-4	1'-10	6'-6	5	9	8'-4	1'-10	6'-6	4	9	19'-0	5	9	4'-11	4	4.5	26'-5	1
2	5	9	26'-5	5	9	7'-1	5	9	8'-5	2'-1	6'-4	5	9	8'-2	1'-10	6'-4	6	9	18'-0	6	9	4'-4	6	4.5	26'-5	2
3	4	9	26'-5	5	9	7'-9	4	9	8'-3	1'-11	6'-4	5	9	8'-2	1'-10	6'-4	6	12	17'-7	6	12	4'-8	6	4.5	26'-5	3
4	5	12	26'-5	5	12	7'-3	4	9	8'-3	1'-11	6'-4	5	9	8'-2	1'-10	6'-4	5	9	17'-5	6	9	4'-11	5	4.5	26'-5	4
5-7	6	12	26'-5	6	12	8'-1	4	9	7'-9	1'-7	6'-2	4	9	7'-9	1'-7	6'-2	6	9	17'-3	6	9	4'-6	6	4.5	26'-5	5-7
8-10	6	12	26'-5	6	12	8'-4	4	9	7'-10	1'-7	6'-3	4	9	7'-10	1'-7	6'-3	7	15	17'-7	8	15	5'-10	7	7.5	26'-5	8-10
11-13	5	9	26'-5	5	9	7'-5	4	9	8'-2	1'-7	6'-7	5	9	8'-5	1'-10	6'-7	6	9	17'-4	6	9	4'-11	6	4.5	26'-5	11-13
14-16	7	18	26'-5	7	18	8'-3	5	12	8'-4	1'-9	6'-7	5	12	8'-2	1'-7	6'-7	6	9	17'-4	6	9	5'-0	6	4.5	26'-5	14-16
17-19	7	18	26'-5	7	18	8'-5	5	12	8'-6	1'-10	6'-8	5	12	8'-3	1'-7	6'-8	8	18	17'-10	9	18	6'-3	8	4.5	26'-5	17-19
20-22	7	18	26'-5	7	18	8'-7	5	12	8'-10	2'-0	6'-10	5	12	8'-5	1'-7	6'-10	8	15	17'-8	8	15	5'-6	8	7.5	26'-5	20-22
23-25	7	18	26'-5	7	18	8'-11	5	12	9'-0	2'-1	6'-11	5	12	8'-6	1'-7	6'-11	8	15	17'-9	8	15	5'-9	8	7.5	26'-5	23-25

DIMENSIONS

FILL	S	H	A	B	C	D*	E*	F*	G*	J*	U	V	W	X	Y	Z
0	12	6	10.5	11	9	9	4.5	4.5	12	12	1'-8	9'-5	2'-7	3'-5	13'-3	2'-2
1	12	6	11.5	12	9	9	4.5	4.5	18	12	1'-11	7'-2	3'-2	3'-7	5'-10	2'-6
2	12	6	9	10	9	9	4.5	4.5	12	12	2'-5	6'-3	3'-1	3'-5	4'-10	2'-2
3	12	6	8	10	9	9	4.5	4.5	12	12	2'-7	4'-10	2'-9	3'-1	4'-5	2'-4
4	12	6	8	10	9	9	4.5	4.5	12	12	2'-10	4'-6	2'-8	3'-4	4'-3	2'-6
5-7	12	6	8.5	10.5	9	9	4.5	4.5	12	12	3'-0	4'-5	2'-10	3'-0	4'-1	2'-3
8-10	12	6	10	12	9	9	7.5	4.5	18	18	3'-5	4'-6	3'-0	3'-1	4'-5	2'-11
11-13	12	6	11.5	13.5	9	9	4.5	4.5	12	12	3'-2	4'-4	2'-7	3'-9	4'-2	2'-5
14-16	12	6	13	15.5	9	9	4.5	9	18	12	3'-3	4'-6	2'-9	3'-5	4'-2	2'-6
17-19	12	6	15	17	9	9	4.5	9	12	12	3'-2	4'-4	2'-8	3'-5	4'-8	3'-2
20-22	12	6	16.5	18.5	9	9	4.5	9	18	18	3'-5	4'-6	3'-4	3'-5	4'-6	2'-9
23-25	12	6	17.5	20	9	9	4.5	9	18	18	3'-4	4'-6	3'-4	3'-3	4'-7	2'-10

FILL	QUANTITIES CONCRETE YD³/FT SLAB	FLOOR	WALLS	TOTAL	STEEL LBS/FT
0	.908	.965	.467	2.340	331.76
1	.989	1.048	.467	2.504	325.71
2	.787	.883	.467	2.137	413.37
3	.706	.883	.467	2.056	349.89
4	.706	.883	.467	2.056	331.55
5-7	.746	.924	.467	2.137	355.34
8-10	.868	1.048	.467	2.383	365.95
11-13	.989	1.172	.467	2.628	380.89
14-16	1.111	1.337	.467	2.915	386.92
17-19	1.273	1.461	.467	3.201	394.29
20-22	1.394	1.584	.467	3.445	413.47
23-25	1.475	1.708	.467	3.650	417.37

* THESE DIMENSIONS ARE CORRECT FOR 38' LONG STANDARD SECTIONS ONLY. DIMENSIONS MUST BE RECALCULATED FOR ALL OTHER SECTION LENGTHS.

NOTES:

1. SEE DRAWING TWRCB-GI-87 FOR GENERAL INFORMATION, SPECIFICATIONS, AND DESIGN STRESSES.

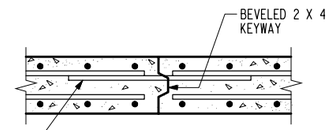

TOP SLAB CONSTRUCTION JOINT DETAIL

BENT BAR DETAIL

BARS	D
4	3
5	3¾
6	4½
7	5¼

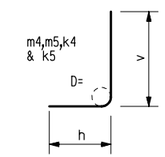

NOTE:
ALL DIMENSIONS ARE OUT TO OUT.
D = PIN DIAMETER.

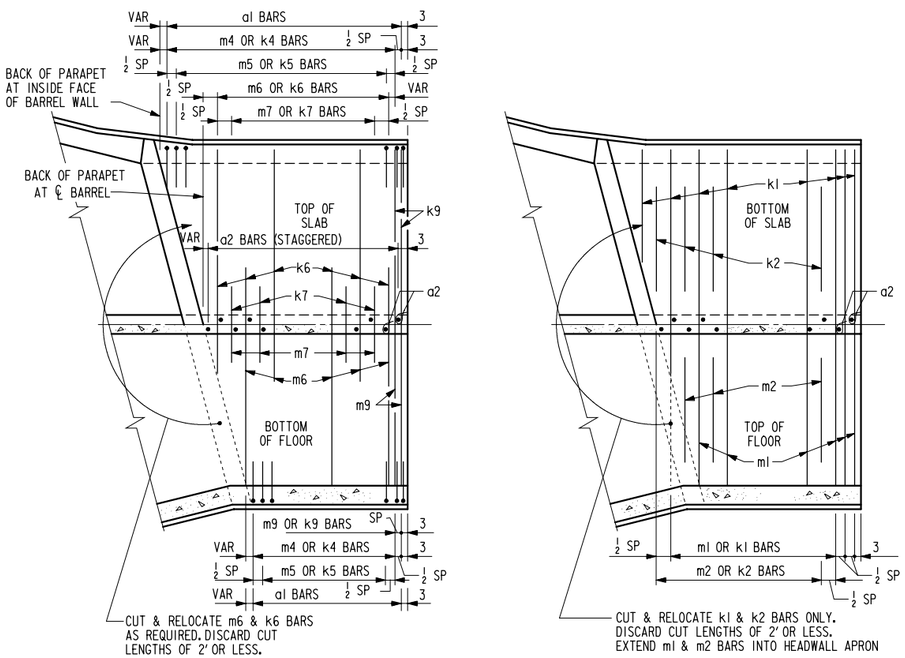

END SECTION - PLAN VIEW (KEYWAY NOT SHOWN)

NOTE: END SECTION DETAILS SHOWN ARE FOR A 15° SKEW BARREL. USE FOR SKEWS OF 30° & 45° BY INCREASING THE NUMBER OF TRANSVERSE REINFORCING BARS REQUIRED TO BE CUT & RELOCATED.

NOTE : ALL LONGITUDINAL BARREL STEEL SHALL EXTEND AT LEAST TO THE BACKFACE OF PARAPET.

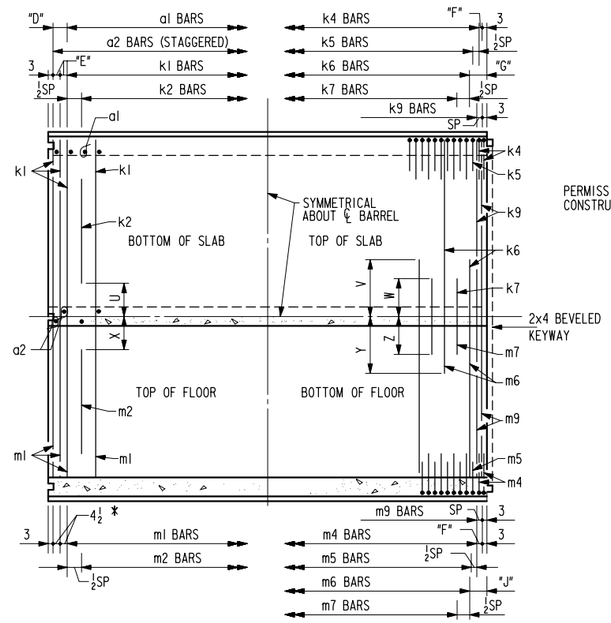

STANDARD SECTION PLAN VIEW

NOTE: TYPICAL FOR LENGTHS OF 38'.
(KEYWAY IS TO BE OMITTED WHEN BELL JOINTS ARE USED)

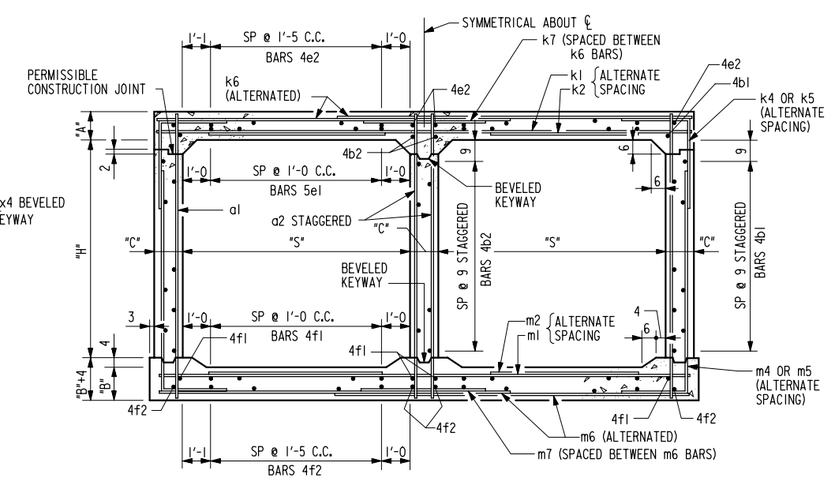

BARREL SECTION

LATEST REVISION DATE : 12-5-96

APPROVED BY: William R. Lundquist

STANDARD DESIGN

CULVERT BARREL DETAILS

FOR
TWIN REINFORCED CONCRETE BOX CULVERTS

IOWA DEPARTMENT OF TRANSPORTATION - HIGHWAY DIVISION

JULY , 1987

TWRCB 12-6-87

REVISED: 12/96 ; KEYWAY NOTATION CHANGED, DOWEL BAR LENGTH CHANGED.
TWRCB 12-6-87

VARIABLE DIMENSIONS AND QUANTITIES FOR BARREL SECTIONS

BAR LIST

	a1			a2			b1			b2			e1			e2			f1			f2		
FILL	SIZE	SP	LENGTH	SIZE	SP	LENGTH	SIZE	SP	NO.	SIZE	SP	NO.	SIZE	SP	NO.	SIZE	SP	NO.	SIZE	SP	NO.	SIZE	SP	NO.
0	4	9	9'-8	5	4.5	9'-8	4	9	22	4	9	12	5	12	22	4	17	20	4	12	26	4	17	20
1	4	9	9'-10	6	7.5	9'-10	4	9	22	4	9	12	5	12	22	4	17	20	4	12	26	4	17	20
2	4	9	9'-6	5	4.5	9'-6	4	9	22	4	9	12	5	12	22	4	17	20	4	12	26	4	17	20
3	4	9	9'-5	5	6	9'-5	4	9	22	4	9	12	5	12	22	4	17	20	4	12	26	4	17	20
4	4	9	9'-5	5	6	9'-5	4	9	22	4	9	12	5	12	22	4	17	20	4	12	26	4	17	20
5-7	4	9	9'-6	5	6	9'-6	4	9	22	4	9	12	5	12	22	4	17	20	4	12	26	4	17	20
8-10	4	9	9'-9	5	6	9'-9	4	9	22	4	9	12	5	12	22	4	17	20	4	12	26	4	17	20
11-13	6	9	10'-0	5	6	10'-0	4	9	22	4	9	12	5	12	22	4	17	20	4	12	26	4	17	20
14-16	4	9	10'-3	5	6	10'-3	4	9	22	4	9	12	5	12	22	4	17	20	4	12	26	4	17	20
17-19	4	9	10'-6	5	6	10'-6	4	9	22	4	9	12	5	12	22	4	17	20	4	12	26	4	17	20
20-22	4	9	10'-9	5	6	10'-9	4	9	22	4	9	12	5	12	22	4	17	20	4	12	26	4	17	20
23-25	4	9	11'-0	6	7.5	11'-0	4	9	22	4	9	12	5	12	22	4	17	20	4	12	26	4	17	20

	k1			k2			k4				
FILL	SIZE	SP	LENGTH	SIZE	SP	LENGTH	SIZE	SP	LENGTH	h	v
0	4	9	26'-2	5	9	10'-8	5	12	5'-2	1'-9	3'-5
1	4	9	26'-2	5	9	10'-4	5	12	5'-5	1'-11	3'-6
2	5	9	26'-2	6	9	9'-2	5	9	5'-7	2'-4	3'-3
3	5	12	26'-2	6	12	8'-8	5	12	5'-7	2'-5	3'-2
4	4	9	26'-2	5	9	8'-2	4	9	5'-4	2'-2	3'-2
5-7	4	9	26'-2	5	9	8'-0	5	12	5'-5	2'-2	3'-3
8-10	6	15	26'-2	6	15	7'-10	5	12	5'-1	1'-10	3'-3
11-13	5	12	26'-2	6	12	8'-4	4	9	5'-0	1'-9	3'-3
14-16	5	12	26'-2	6	12	8'-7	5	12	5'-6	1'-11	3'-7
17-19	7	18	26'-2	7	18	8'-3	5	12	5'-9	2'-0	3'-9
20-22	7	18	26'-2	7	18	8'-6	5	12	6'-3	2'-6	3'-9
23-25	7	18	26'-2	7	18	8'-9	5	12	6'-7	2'-8	3'-11

	k5					k6			k7			k9		
FILL	SIZE	SP	LENGTH	h	v	SIZE	SP	LENGTH	SIZE	SP	LENGTH	SIZE	SP *	LENGTH
0	5	12	5'-2	1'-9	3'-5	5	12	26'-2	5	12	5'-2	5	4.5	26'-2
1	5	12	5'-2	1'-8	3'-6	5	15	20'-4	6	15	6'-4	5	7.5	26'-2
2	5	9	5'-4	2'-1	3'-3	5	9	19'-1	6	9	6'-1	5	4.5	26'-2
3	6	12	5'-2	2'-0	3'-2	5	9	17'-10	6	9	5'-7	5	4.5	26'-2
4	5	9	5'-3	2'-1	3'-2	6	12	17'-7	6	12	5'-3	6	4.5	26'-2
5-7	6	12	5'-3	2'-0	3'-3	6	12	17'-5	7	12	5'-8	6	4.5	26'-2
8-10	6	12	5'-2	1'-11	3'-3	7	15	17'-6	8	15	5'-11	7	7.5	26'-2
11-13	4	9	4'-11	1'-8	3'-3	6	9	17'-2	6	9	4'-11	6	4.5	26'-2
14-16	6	12	5'-5	1'-10	3'-7	8	18	17'-8	9	18	6'-3	8	4.5	26'-2
17-19	6	12	5'-7	1'-10	3'-9	8	15	17'-6	8	15	5'-7	8	7.5	26'-2
20-22	6	12	6'-1	2'-4	3'-9	8	15	17'-6	8	15	6'-10	8	7.5	26'-2
23-25	6	12	6'-3	2'-4	3'-11	8	15	17'-6	8	15	6'-10	8	7.5	26'-2

	m1			m2			m4				
FILL	SIZE	SP	LENGTH	SIZE	SP	LENGTH	SIZE	SP	LENGTH	h	v
0	5	12	26'-8	5	12	6'-11	5	12	9'-11	1'-8	8'-3
1	5	12	26'-8	5	12	7'-1	5	12	10'-6	2'-2	8'-4
2	6	12	26'-8	6	12	7'-3	5	9	10'-6	2'-2	8'-4
3	4	9	26'-8	5	9	7'-9	5	12	10'-5	2'-3	8'-2
4	4	9	26'-8	5	9	7'-9	4	9	10'-5	2'-1	8'-4
5-7	5	12	26'-8	6	12	8'-1	5	12	10'-3	2'-0	8'-3
8-10	5	9	26'-8	5	9	7'-2	5	12	10'-4	1'-11	8'-5
11-13	5	12	26'-8	6	12	8'-6	4	9	10'-1	1'-8	8'-5
14-16	7	18	26'-8	7	18	8'-3	5	12	10'-5	1'-9	8'-8
17-19	7	18	26'-8	7	18	8'-5	5	12	10'-7	1'-10	8'-9
20-22	7	18	26'-8	7	18	8'-7	5	12	11'-0	2'-0	9'-0
23-25	7	18	26'-8	7	18	8'-11	5	12	11'-2	2'-1	9'-1

	m5					m6			m7			m9			
FILL	SIZE	SP	LENGTH	h	v	SIZE	SP	LENGTH	SIZE	SP	LENGTH	SIZE	SP *	LENGTH	FILL
0	6	12	10'-1	1'-10	8'-3	4	9	26'-8	5	9	4'-11	4	4.5	26'-8	0
1	6	12	10'-2	1'-10	8'-4	4	9	18'-9	5	9	5'-1	4	4.5	26'-8	1
2	5	9	10'-3	1'-11	8'-4	6	9	18'-0	6	9	4'-5	6	4.5	26'-8	2
3	6	12	10'-0	1'-10	8'-2	6	12	17'-8	6	12	4'-9	6	4.5	26'-8	3
4	5	9	10'-3	1'-11	8'-4	5	9	17'-6	6	9	5'-0	5	4.5	26'-8	4
5-7	6	12	10'-1	1'-10	8'-3	6	9	17'-5	6	9	4'-7	6	4.5	26'-8	5-7
8-10	6	12	10'-3	1'-10	8'-5	7	15	17'-9	8	15	5'-11	7	7.5	26'-8	8-10
11-13	4	9	10'-1	1'-8	8'-5	7	15	17'-9	8	15	6'-0	7	7.5	26'-8	11-13
14-16	6	12	10'-6	1'-10	8'-8	6	9	17'-6	6	9	5'-0	6	4.5	26'-8	14-16
17-19	6	12	10'-7	1'-10	8'-9	6	9	17'-7	6	9	5'-4	6	4.5	26'-8	17-19
20-22	6	12	10'-10	1'-10	9'-0	7	12	17'-9	7	12	5'-8	7	4.5	26'-8	20-22
23-25	6	12	10'-11	1'-10	9'-1	8	15	17'-10	8	15	5'-9	8	7.5	26'-8	23-25

	DIMENSIONS															QUANTITIES				
																CONCRETE YD ³/FT				STEEL
FILL	S	H	A	B	C	D *	E *	F *	G *	J *	U	V	W	X	Y	Z	SLAB	FLOOR	WALLS	TOTAL	LBS/FT
0	12	8	10.5	11	10	9	4.5	9	12	12	1'-8	13'-1	2'-7	3'-6	13'-4	2'-6	.920	.977	.703	2.600	366.05
1	12	8	11.5	12	10	9	4.5	9	18	12	1'-11	7'-3	3'-2	3'-7	5'-5	2'-6	1.002	1.060	.703	2.765	349.66
2	12	8	9	10	10	9	4.5	4.5	12	12	2'-5	6'-0	3'-1	3'-4	4'-8	2'-3	.798	.893	.703	2.394	444.13
3	12	8	8	10	10	9	4.5	9	12	12	2'-7	4'-9	2'-9	3'-1	4'-4	2'-5	.716	.893	.703	2.312	376.26
4	12	8	8	10	10	9	4.5	4.5	12	12	2'-10	4'-6	2'-7	3'-1	4'-2	2'-6	.716	.893	.703	2.312	360.13
5-7	12	8	8.5	10.5	10	9	4.5	9	12	12	3'-0	4'-4	2'-10	3'-0	4'-1	2'-3	.757	.935	.703	2.395	388.42
8-10	12	8	10	12	10	9	7.5	9	18	18	3'-4	4'-5	3'-0	3'-8	4'-5	2'-11	.880	1.060	.703	2.643	402.16
11-13	12	8	11.5	14	10	9	4.5	4.5	12	18	3'-3	4'-1	2'-6	3'-2	4'-5	3'-0	1.002	1.227	.703	2.932	402.63
14-16	12	8	13	15.5	10	9	4.5	9	12	12	3'-2	4'-7	3'-2	3'-5	4'-2	2'-6	1.125	1.352	.703	3.180	423.97
17-19	12	8	14.5	17	10	9	4.5	9	18	12	3'-6	4'-5	2'-9	3'-5	4'-3	2'-8	1.248	1.477	.703	3.428	438.24
20-22	12	8	16	18.5	10	9	4.5	9	18	12	3'-5	4'-5	3'-5	3'-5	4'-5	2'-10	1.370	1.602	.703	3.675	450.47
23-25	12	8	17.5	20	10	9	4.5	9	18	18	3'-4	4'-5	3'-5	3'-3	4'-6	2'-11	1.493	1.727	.703	3.923	461.37

* THESE DIMENSIONS ARE CORRECT FOR 38' LONG STANDARD SECTIONS ONLY. DIMENSIONS MUST BE RECALCULATED FOR ALL OTHER SECTION LENGTHS.

NOTES:

1. SEE DRAWING TWRCB-GI-87 FOR GENERAL INFORMATION, SPECIFICATIONS, AND DESIGN STRESSES.

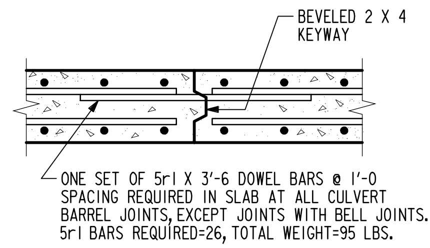

TOP SLAB CONSTRUCTION JOINT DETAIL

BENT BAR DETAIL

BARS	D
4	3
5	3¾
6	4½
7	5¼

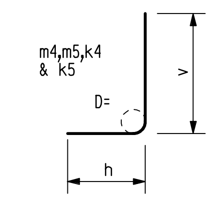

NOTE:
ALL DIMENSIONS ARE OUT TO OUT.
D = PIN DIAMETER.

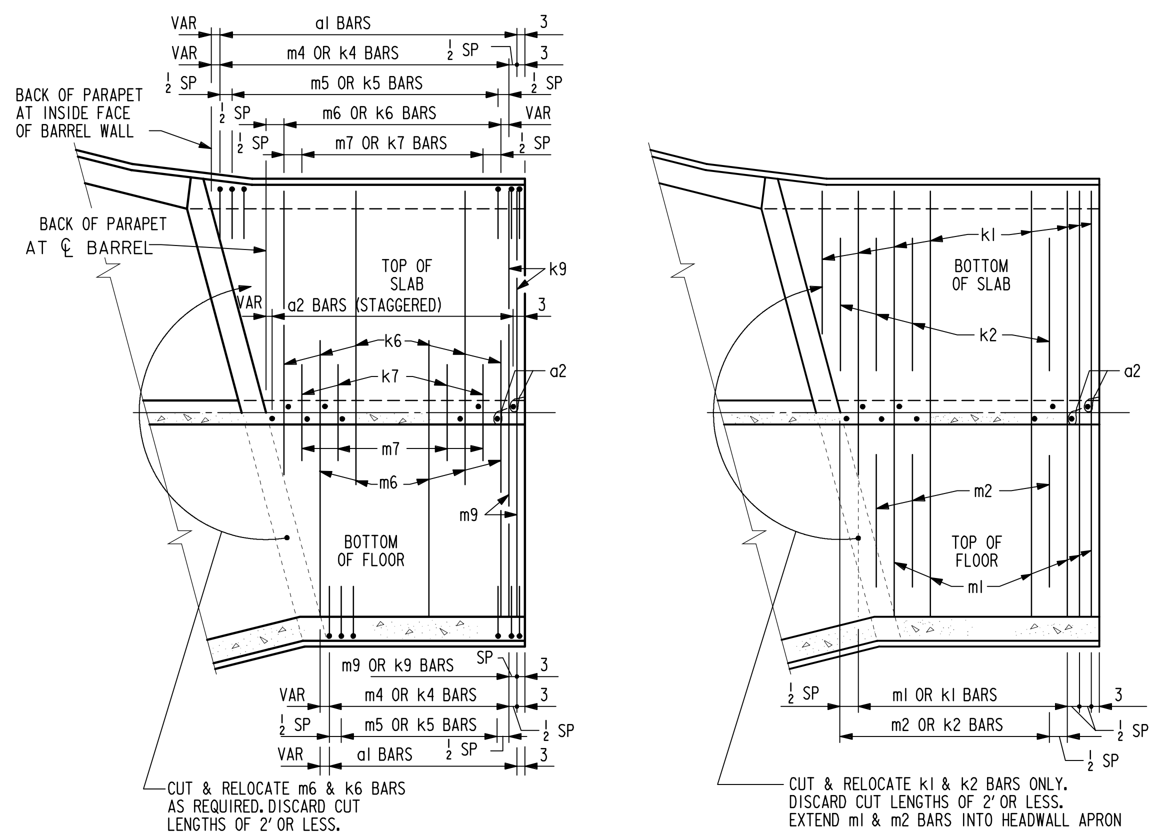

END SECTION - PLAN VIEW (KEYWAY NOT SHOWN)

NOTE: END SECTION DETAILS SHOWN ARE FOR A 15° SKEW BARREL. USE FOR SKEWS OF 30° & 45° BY INCREASING THE NUMBER OF TRANSVERSE REINFORCING BARS REQUIRED TO BE CUT & RELOCATED.

NOTE: ALL LONGITUDINAL BARREL STEEL SHALL EXTEND AT LEAST TO THE BACKFACE OF PARAPET.

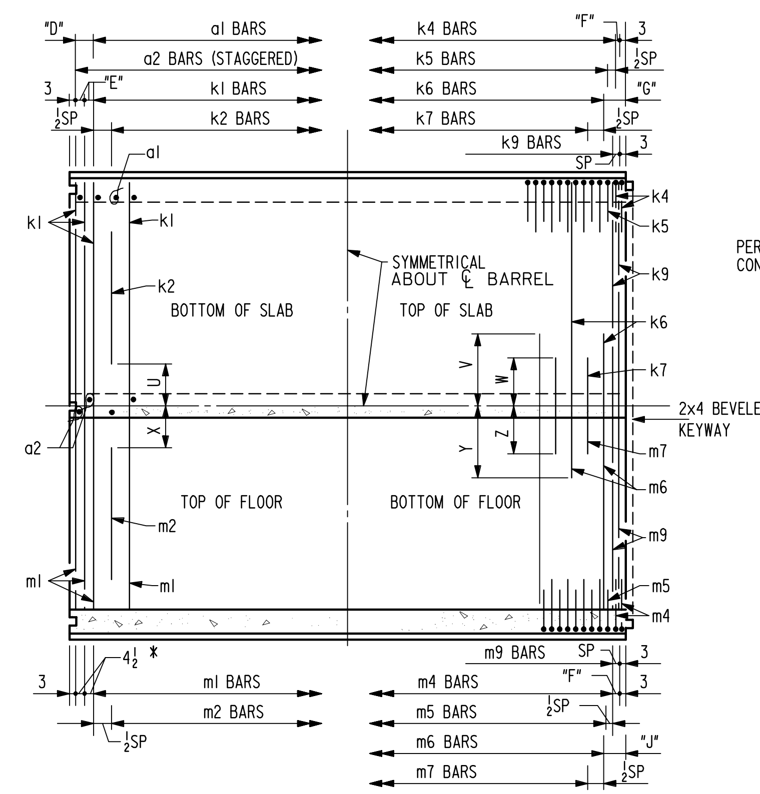

STANDARD SECTION PLAN VIEW

NOTE: TYPICAL FOR LENGTHS OF 38'.
(KEYWAY IS TO BE OMITTED WHEN BELL JOINTS ARE USED)

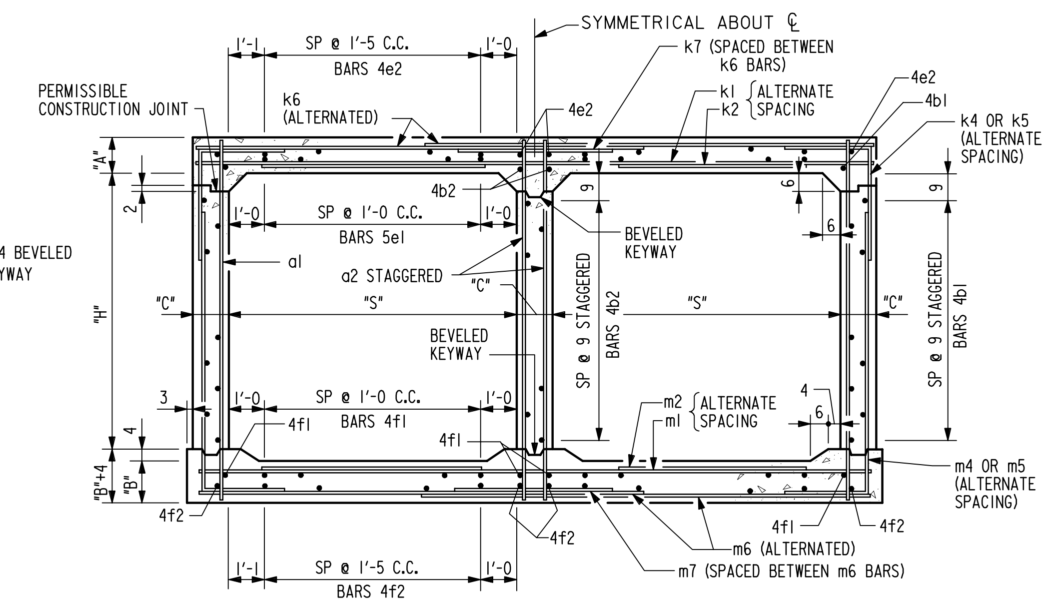

BARREL SECTION

LATEST REVISION DATE : 12-5-96	APPROVED BY : William A. Lundquist	STANDARD DESIGN
		CULVERT BARREL DETAILS FOR TWIN REINFORCED CONCRETE BOX CULVERTS
		IOWA DEPARTMENT OF TRANSPORTATION - HIGHWAY DIVISION
		JULY , 1987 — TWRCB 12-8-87

REVISED: 12/96 ; KEYWAY NOTATION CHANGED, DOWEL BAR LENGTH CHANGED.
TWRCB 12-8-87

VARIABLE DIMENSIONS AND QUANTITIES FOR BARREL SECTIONS

BAR LIST

FILL	a1 SIZE	a1 SP	a1 LENGTH	a2 SIZE	a2 SP	a2 LENGTH	b1 SIZE	b1 SP	b1 NO.	b2 SIZE	b2 SP	b2 NO.	e1 SIZE	e1 SP	e1 NO.	e2 SIZE	e2 SP	e2 NO.	f1 SIZE	f1 SP	f1 NO.	f2 SIZE	f2 SP	f2 NO.
0	4	9	11'-9	6	7.5	11'-9	4	9	28	4	9	15	5	12	22	4	17	20	4	12	26	4	17	20
1	4	9	11'-10	6	7.5	11'-10	4	9	28	4	9	15	5	12	22	4	17	20	4	12	26	4	17	20
2	4	6	11'-6	5	4.5	11'-6	4	9	28	4	9	15	5	12	22	4	17	20	4	12	26	4	17	20
3	4	9	11'-5	5	6	11'-5	4	9	28	4	9	15	5	12	22	4	17	20	4	12	26	4	17	20
4	4	9	11'-5	5	6	11'-5	4	9	28	4	9	15	5	12	22	4	17	20	4	12	26	4	17	20
5-7	4	9	11'-6	5	6	11'-6	4	9	28	4	9	15	5	12	22	4	17	20	4	12	26	4	17	20
8-10	4	6	11'-9	5	6	11'-9	4	9	28	4	9	15	5	12	22	4	17	20	4	12	26	4	17	20
11-13	4	6	12'-0	5	6	12'-0	4	9	28	4	9	15	5	12	22	4	17	20	4	12	26	4	17	20
14-16	4	6	12'-3	5	6	12'-3	4	9	28	4	9	15	5	12	22	4	17	20	4	12	26	4	17	20
17-19	4	9	12'-6	5	6	12'-6	4	9	28	4	9	15	5	12	22	4	17	20	4	12	26	4	17	20
20-22	4	6	12'-9	5	6	12'-9	4	9	28	4	9	15	5	12	22	4	17	20	4	12	26	4	17	20
23-25	4	6	13'-0	5	6	13'-0	4	9	28	4	9	15	5	12	22	4	17	20	4	12	26	4	17	20

FILL	k1 SIZE	k1 SP	k1 LENGTH	k2 SIZE	k2 SP	k2 LENGTH	k4 SIZE	k4 SP	k4 LENGTH	k4 h	k4 v	k5 SIZE	k5 SP	k5 LENGTH	k5 h	k5 v	k6 SIZE	k6 SP	k6 LENGTH	k7 SIZE	k7 SP	k7 LENGTH	k9 SIZE	k9 SP*	k9 LENGTH
0	4	9	26'-2	5	9	10'-9	5	12	5'-2	1'-9	3'-5	5	12	5'-2	1'-9	3'-5	5	12	26'-2	5	12	5'-3	5	4.5	26'-2
1	4	9	26'-2	5	9	10'-5	5	12	5'-6	2'-0	3'-6	5	12	5'-2	1'-8	3'-6	5	15	21'-3	6	15	6'-5	5	7.5	26'-2
2	4	9	26'-2	6	9	9'-4	5	12	5'-6	2'-4	3'-2	6	12	5'-2	2'-0	3'-2	5	9	19'-5	6	9	6'-2	5	4.5	26'-2
3	4	9	26'-2	6	12	8'-9	5	12	5'-8	2'-6	3'-2	6	12	5'-2	2'-0	3'-2	5	9	17'-11	6	9	5'-8	5	4.5	26'-2
4	4	9	26'-2	5	9	8'-3	5	12	5'-7	2'-5	3'-2	6	12	5'-2	2'-0	3'-2	5	9	17'-7	6	9	5'-6	5	4.5	26'-2
5-7	4	9	26'-2	5	9	8'-1	5	12	5'-5	2'-3	3'-2	6	12	5'-2	2'-0	3'-2	6	12	17'-5	7	12	5'-9	6	4.5	26'-2
8-10	6	15	26'-2	6	15	7'-10	5	12	5'-2	1'-11	3'-3	6	12	5'-2	1'-11	3'-3	7	15	17'-6	8	15	5'-11	7	7.5	26'-2
11-13	6	12	26'-2	6	12	8'-5	5	12	5'-2	1'-9	3'-5	6	12	5'-4	1'-11	3'-5	6	9	17'-3	6	9	4'-11	6	4.5	26'-2
14-16	6	12	26'-2	6	12	8'-7	5	12	5'-5	1'-11	3'-6	6	12	5'-4	1'-10	3'-6	8	18	17'-8	9	18	6'-3	8	4.5	26'-2
17-19	7	18	26'-2	7	18	8'-3	5	9	5'-9	2'-0	3'-9	5	9	5'-8	1'-11	3'-9	8	15	17'-6	8	15	5'-7	8	7.5	26'-2
20-22	7	18	26'-2	7	18	8'-5	5	9	6'-4	2'-6	3'-10	5	9	6'-3	2'-5	3'-10	8	15	17'-6	8	15	6'-10	8	7.5	26'-2
23-25	7	18	26'-2	7	18	8'-8	5	9	6'-8	2'-8	4'-0	5	9	6'-5	2'-5	4'-0	8	15	17'-6	8	15	6'-10	8	7.5	26'-2

FILL	m1 SIZE	m1 SP	m1 LENGTH	m2 SIZE	m2 SP	m2 LENGTH	m4 SIZE	m4 SP	m4 LENGTH	m4 h	m4 v	m5 SIZE	m5 SP	m5 LENGTH	m5 h	m5 v	m6 SIZE	m6 SP	m6 LENGTH	m7 SIZE	m7 SP	m7 LENGTH	m9 SIZE	m9 SP*	m9 LENGTH	FILL
0	5	12	26'-8	5	12	7'-0	5	12	12'-0	1'-8	10'-4	6	12	12'-2	1'-10	10'-4	5	15	26'-8	6	15	5'-5	5	7.5	26'-8	0
1	5	12	26'-8	5	12	7'-4	5	12	12'-6	2'-2	10'-4	6	12	12'-2	1'-10	10'-4	4	9	18'-11	5	9	5'-1	4	4.5	26'-8	1
2	5	12	26'-8	5	9	7'-3	5	12	12'-7	2'-3	10'-4	6	12	12'-2	1'-10	10'-4	6	12	18'-5	7	12	5'-6	6	4.5	26'-8	2
3	4	9	26'-8	5	9	8'-0	5	12	12'-6	2'-4	10'-2	6	12	12'-0	1'-10	10'-2	5	9	17'-8	6	9	5'-1	5	4.5	26'-8	3
4	4	9	26'-8	5	9	7'-11	5	12	12'-6	2'-4	10'-2	6	12	12'-0	1'-10	10'-2	5	9	17'-7	6	9	5'-1	5	4.5	26'-8	4
5-7	5	12	26'-8	6	12	8'-3	5	12	12'-4	2'-0	10'-4	6	12	12'-2	1'-10	10'-4	6	9	17'-5	6	9	4'-8	6	4.5	26'-8	5-7
8-10	5	9	26'-8	5	9	7'-4	5	12	12'-3	1'-10	10'-5	6	12	12'-3	1'-10	10'-5	6	9	17'-5	6	9	4'-10	6	4.5	26'-8	8-10
11-13	7	18	26'-8	7	18	8'-2	5	12	12'-3	1'-8	10'-7	6	12	12'-5	1'-10	10'-7	6	9	17'-5	6	9	4'-10	6	4.5	26'-8	11-13
14-16	7	18	26'-8	7	18	8'-3	5	12	12'-6	1'-9	10'-9	6	12	12'-7	1'-10	10'-9	6	9	17'-6	6	9	5'-0	6	4.5	26'-8	14-16
17-19	8	15	26'-8	8	15	8'-5	5	9	12'-9	1'-10	10'-11	5	9	12'-10	1'-11	10'-11	8	18	17'-11	9	18	6'-4	8	4.5	26'-8	17-19
20-22	8	15	26'-8	8	15	8'-7	5	9	13'-0	2'-0	11'-0	5	9	12'-11	1'-11	11'-0	8	15	17'-9	8	15	5'-7	8	7.5	26'-8	20-22
23-25	8	15	26'-8	8	15	8'-10	5	9	13'-3	2'-1	11'-2	5	9	13'-1	1'-11	11'-2	8	15	17'-10	8	15	5'-9	8	7.5	26'-8	23-25

DIMENSIONS

FILL	S	H	A	B	C	D*	E*	F*	G*	J*	U	V	W	X	Y	Z
0	12	10	10.5	11.5	10	9	4.5	9	12	18	1'-7	13'-1	2'-7	3'-7	13'-4	2'-8
1	12	10	11.5	12	10	9	4.5	9	18	12	1'-10	8'-2	3'-2	3'-5	5'-7	2'-7
2	12	10	9	10.5	10	6	4.5	9	12	12	2'-3	6'-4	3'-1	3'-4	5'-1	2'-9
3	12	10	8	10	10	9	4.5	9	12	12	2'-7	4'-10	2'-10	2'-11	4'-4	2'-6
4	12	10	8	10	10	9	4.5	9	12	12	2'-10	4'-6	2'-9	3'-0	4'-3	2'-7
5-7	12	10	8.5	10.5	10	9	4.5	9	12	12	3'-0	4'-4	2'-10	2'-11	4'-1	2'-4
8-10	12	10	10	12	10	6	7.5	9	18	12	3'-5	4'-5	3'-0	3'-7	4'-1	2'-5
11-13	12	10	11.5	14	10	6	4.5	9	12	12	3'-2	4'-2	2'-6	3'-4	4'-1	2'-5
14-16	12	10	13	15.5	10	6	4.5	9	12	12	3'-2	4'-7	3'-2	3'-5	4'-2	2'-6
17-19	12	10	14.5	17	10	9	4.5	4.5	18	12	3'-5	4'-5	2'-9	3'-5	4'-7	3'-2
20-22	12	10	16	18.5	10	6	4.5	4.5	18	18	3'-5	4'-5	3'-5	3'-4	4'-5	2'-9
23-25	12	10	7.5	20	10	6	4.5	4.5	18	18	3'-4	4'-5	3'-5	3'-3	4'-6	2'-10

FILL	QUANTITIES CONCRETE YD³/FT SLAB	FLOOR	WALLS	TOTAL	STEEL LBS/FT
0	.920	1.018	.889	2.827	386.97
1	1.002	1.060	.889	2.951	375.84
2	.798	.935	.889	2.622	459.16
3	.716	.893	.889	2.498	401.00
4	.716	.893	.889	2.498	391.50
5-7	.757	.935	.889	2.581	413.32
8-10	.880	1.060	.889	2.829	438.68
11-13	1.002	1.227	.889	3.118	449.63
14-16	1.125	1.352	.889	3.366	458.42
17-19	1.248	1.477	.889	3.614	477.71
20-22	1.370	1.602	.889	3.861	499.47
23-25	1.493	1.727	.889	4.109	505.00

* THESE DIMENSIONS ARE CORRECT FOR 38' LONG STANDARD SECTIONS ONLY. DIMENSIONS MUST BE RECALCULATED FOR ALL OTHER SECTION LENGTHS.

NOTES:

1. SEE DRAWING TWRCB-G1-87 FOR GENERAL INFORMATION, SPECIFICATIONS, AND DESIGN STRESSES.

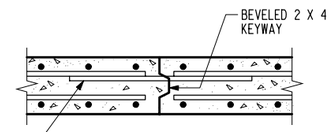

TOP SLAB CONSTRUCTION JOINT DETAIL

BENT BAR DETAIL

BARS	D
4	3
5	3¾
6	4½
7	5¼

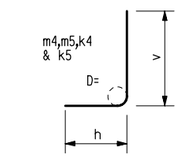

NOTE:
ALL DIMENSIONS ARE OUT TO OUT.
D = PIN DIAMETER.

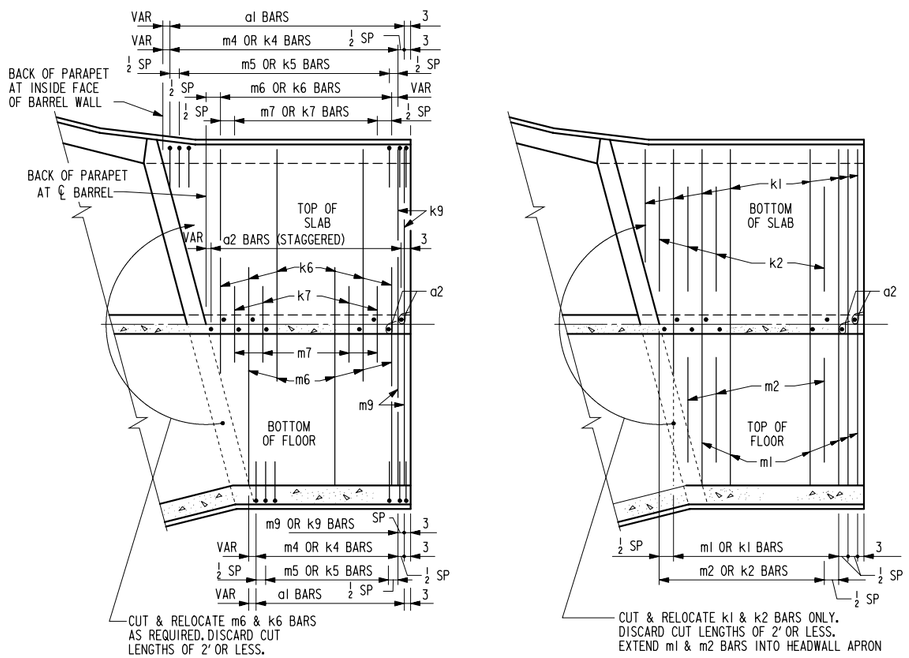

END SECTION - PLAN VIEW (KEYWAY NOT SHOWN)

NOTE: END SECTION DETAILS SHOWN ARE FOR A 15° SKEW BARREL. USE FOR SKEWS OF 30° & 45° BY INCREASING THE NUMBER OF TRANSVERSE REINFORCING BARS REQUIRED TO BE CUT & RELOCATED.

NOTE : ALL LONGITUDINAL BARREL STEEL SHALL EXTEND AT LEAST TO THE BACKFACE OF PARAPET.

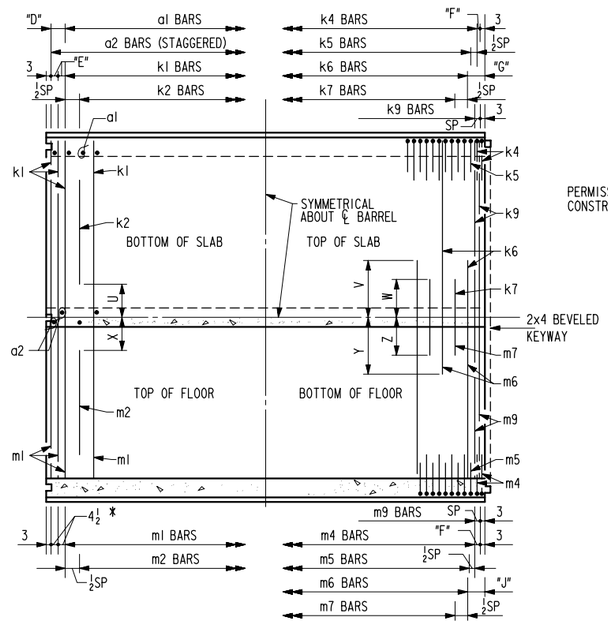

STANDARD SECTION PLAN VIEW

NOTE: TYPICAL FOR LENGTHS OF 38'.
(KEYWAY IS TO BE OMITTED WHEN BELL JOINTS ARE USED)

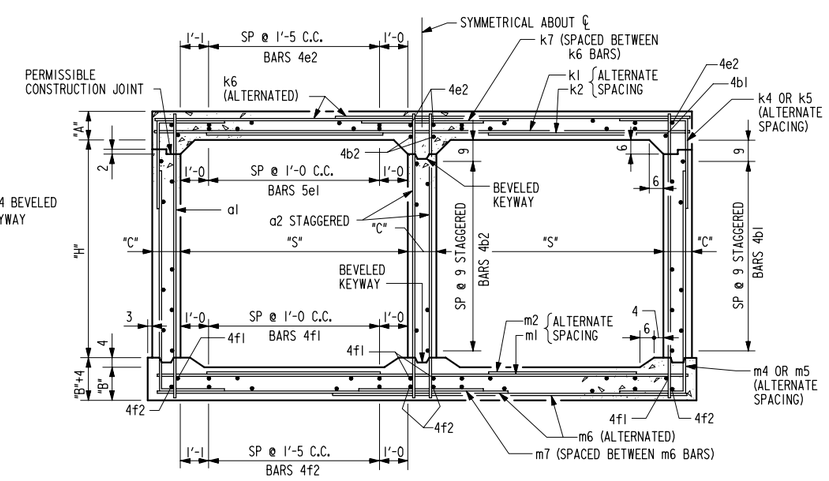

BARREL SECTION

LATEST REVISION DATE : 12-5-96

APPROVED BY: William A. Lundquist

STANDARD DESIGN

CULVERT BARREL DETAILS

FOR

TWIN REINFORCED CONCRETE BOX CULVERTS

IOWA DEPARTMENT OF TRANSPORTATION - HIGHWAY DIVISION

JULY , 1987

TWRCB 12-10-87

REVISED: 12/96 ; KEYWAY NOTATION CHANGED, DOWEL BAR LENGTH CHANGED.
TWRCB 12-10-87

VARIABLE DIMENSIONS AND QUANTITIES FOR BARREL SECTIONS

BAR LIST

FILL	a1 SIZE	a1 SP	a1 LENGTH	a2 SIZE	a2 SP	a2 LENGTH	b1 SIZE	b1 SP	b1 NO.	b2 SIZE	b2 SP	b2 NO.	e1 SIZE	e1 SP	e1 NO.	e2 SIZE	e2 SP	e2 NO.	f1 SIZE	f1 SP	f1 NO.	f2 SIZE	f2 SP	f2 NO.
0	6	9	13'-9	7	9	13'-9	4	9	32	4	9	17	5	12	22	4	17	20	4	12	26	4	17	20
1	4	6	13'-11	7	9	13'-11	4	9	32	4	9	17	5	12	22	4	17	20	4	12	26	4	17	20
2	5	12	13'-7	7	9	13'-7	4	9	32	4	9	17	5	12	22	4	17	20	4	12	26	4	17	20
3	4	6	13'-5	7	9	13'-5	4	9	32	4	9	17	5	12	22	4	17	20	4	12	26	4	17	20
4	4	9	13'-5	7	9	13'-5	4	9	32	4	9	17	5	12	22	4	17	20	4	12	26	4	17	20
5-7	4	6	13'-6	7	9	13'-6	4	9	32	4	9	17	5	12	22	4	17	20	4	12	26	4	17	20
8-10	5	12	13'-8	7	9	13'-8	4	9	32	4	9	17	5	12	22	4	17	20	4	12	26	4	17	20
11-13	5	12	14'-0	7	9	14'-0	4	9	32	4	9	17	5	12	22	4	17	20	4	12	26	4	17	20
14-16	5	12	14'-3	7	9	14'-3	4	9	32	4	9	17	5	12	22	4	17	20	4	12	26	4	17	20
17-19	6	12	14'-6	7	9	14'-6	4	9	32	4	9	17	5	12	22	4	17	20	4	12	26	4	17	20
20-22	4	6	14'-9	7	9	14'-9	4	9	32	4	9	17	5	12	22	4	17	20	4	12	26	4	17	20
23-25	4	6	15'-0	7	9	15'-0	4	9	32	4	9	17	5	12	22	4	17	20	4	12	26	4	17	20

FILL	k1 SIZE	k1 SP	k1 LENGTH	k2 SIZE	k2 SP	k2 LENGTH	k4 SIZE	k4 SP	k4 LENGTH	k4 h	k4 v	k5 SIZE	k5 SP	k5 LENGTH	k5 h	k5 v	k6 SIZE	k6 SP	k6 LENGTH	k7 SIZE	k7 SP	k7 LENGTH	k9 SIZE	k9 SP*	k9 LENGTH	m1 SIZE	m1 SP	m1 LENGTH
0	5	9	10'-7	5	18	5'-6	2'-2	3'-4	6	18	5'-5	2'-1	3'-4	4	9	26'-8	4	9	5'-5	4	4.5	26'-8	4	12	27'-2
1	6	9	9'-8	6	18	6'-8	2'-6	4'-2	6	18	6'-3	2'-1	4'-2	5	12	21'-6	5	12	5'-3	5	4.5	26'-8	5	12	27'-2
2	5	9	8'-8	5	12	6'-9	2'-9	4'-0	6	12	6'-2	2'-2	4'-0	5	9	19'-6	6	9	5'-11	5	4.5	26'-8	5	9	27'-2
3	6	12	8'-7	4	9	5'-11	2'-9	3'-2	5	9	5'-5	2'-3	3'-2	6	12	18'-1	6	12	5'-5	6	4.5	26'-8	5	12	27'-2
4	5	12	7'-7	5	15	6'-8	2'-10	3'-10	6	15	6'-0	2'-2	3'-10	6	12	17'-10	6	12	5'-3	6	4.5	26'-8	4	9	27'-2
5-7	4	9	7'-11	6	18	6'-10	3'-0	3'-10	7	18	6'-5	2'-7	3'-10	6	12	17'-7	7	12	5'-9	6	4.5	26'-8	5	12	27'-2
8-10	6	12	8'-1	6	12	6'-6	2'-6	4'-0	6	12	6'-2	2'-2	4'-0	6	9	17'-5	6	9	4'-10	6	4.5	26'-8	5	9	27'-2
11-13	6	15	7'-11	6	12	6'-7	2'-5	4'-2	6	12	6'-3	2'-1	4'-2	7	15	17'-9	8	15	6'-0	7	7.5	26'-8	5	12	27'-2
14-16	6	12	8'-5	6	12	5'-8	2'-2	3'-6	6	12	5'-6	2'-0	3'-6	6	9	17'-5	6	9	5'-0	6	4.5	26'-8	7	18	27'-2
17-19	6	12	8'-8	6	12	5'-10	2'-2	3'-8	6	12	5'-8	2'-0	3'-8	6	9	17'-6	6	9	5'-3	6	4.5	26'-8	7	18	27'-2
20-22	7	18	8'-4	7	15	7'-11	3'-5	4'-6	7	15	7'-7	3'-1	4'-6	8	18	17'-11	9	18	8'-7	8	4.5	26'-8	7	18	27'-2
23-25	7	18	8'-7	7	15	8'-1	3'-6	4'-7	7	15	7'-8	3'-1	4'-7	8	15	17'-9	8	15	7'-0	8	7.5	26'-8	7	18	27'-2

FILL	m2 SIZE	m2 SP	m2 LENGTH	m4 SIZE	m4 SP	m4 LENGTH	m4 h	m4 v	m5 SIZE	m5 SP	m5 LENGTH	m5 h	m5 v	m6 SIZE	m6 SP	m6 LENGTH	m7 SIZE	m7 SP	m7 LENGTH	m9 SIZE	m9 SP*	m9 LENGTH	FILL
0	5	12	8'-2	6	18	14'-9	2'-4	12'-5	6	18	14'-5	2'-0	12'-5	5	12	27'-2	5	12	4'-5	5	4.5	27'-2	0
1	5	12	7'-1	6	18	15'-2	2'-8	12'-6	7	18	14'-11	2'-5	12'-6	5	12	18'-6	5	12	4'-8	5	4.5	27'-2	1
2	5	9	7'-1	6	12	14'-8	3'-1	11'-7	6	12	13'-7	2'-0	11'-7	5	9	18'-2	6	9	5'-4	5	4.5	27'-2	2
3	6	12	7'-9	4	9	15'-1	2'-9	12'-4	5	9	14'-5	2'-1	12'-4	5	9	17'-10	6	9	5'-1	5	4.5	27'-2	3
4	5	9	7'-9	6	15	14'-6	3'-0	11'-6	6	15	13'-6	2'-0	11'-6	5	9	17'-8	6	9	5'-2	5	4.5	27'-2	4
5-7	6	12	8'-0	6	18	15'-1	2'-9	12'-4	7	18	14'-9	2'-5	12'-4	6	12	17'-10	7	12	5'-7	6	4.5	27'-2	5-7
8-10	5	9	7'-2	6	12	14'-1	2'-5	11'-8	6	12	13'-8	2'-0	11'-8	6	9	17'-8	6	9	4'-10	6	4.5	27'-2	8-10
11-13	6	12	8'-6	6	12	14'-3	2'-5	11'-10	6	12	13'-10	2'-0	11'-10	7	15	18'-0	8	15	6'-0	7	7.5	27'-2	11-13
14-16	7	18	8'-3	6	12	14'-11	2'-2	12'-9	6	12	14'-9	2'-0	12'-9	6	9	17'-9	6	9	5'-1	6	4.5	27'-2	14-16
17-19	7	18	8'-4	6	12	15'-1	2'-3	12'-10	6	12	14'-10	2'-0	12'-10	6	9	17'-10	6	9	5'-5	6	4.5	27'-2	17-19
20-22	7	18	8'-7	7	15	15'-7	2'-7	13'-0	7	15	15'-5	2'-5	13'-0	6	9	18'-0	6	9	5'-9	6	4.5	27'-2	20-22
23-25	7	18	8'-10	7	15	15'-9	2'-8	13'-1	7	15	15'-6	2'-5	13'-1	8	18	18'-2	9	18	6'-5	8	4.5	27'-2	23-25

DIMENSIONS

FILL	S	H	A	B	C	D*	E*	F*	G*	J*	U	V	W	X	Y	Z
0	12	12	10.5	12	12	9	4.5	9	12	12	1'-8	13'-4	2'-9	2'-11	13'-7	2'-2
1	12	12	11.5	12.5	12	6	4.5	9	12	12	2'-2	8'-2	2'-7	3'-7	4'-11	2'-4
2	12	12	9.5	10.5	12	9	4.5	9	12	12	2'-8	6'-2	3'-0	3'-5	4'-7	2'-8
3	12	12	8	10	12	6	4.5	4.5	12	12	2'-7	4'-9	2'-8	3'-0	4'-3	2'-7
4	12	12	8	10	12	9	4.5	7.5	12	12	3'-1	4'-6	2'-7	3'-0	4'-1	2'-7
5-7	12	12	8	11	12	6	4.5	9	12	12	2'-11	4'-3	2'-11	3'-0	4'-3	2'-10
8-10	12	12	9.5	12	12	9	4.5	9	18	12	3'-1	4'-1	2'-5	3'-7	4'-1	2'-5
11-13	12	12	11.5	14	12	9	7.5	9	18	18	3'-5	4'-5	3'-0	3'-1	4'-5	3'-0
14-16	12	12	13	15.5	12	9	4.5	9	12	12	3'-3	4'-1	2'-6	3'-4	4'-2	2'-6
17-19	12	12	14.5	17	12	9	4.5	9	12	12	3'-2	4'-2	2'-7	3'-5	4'-3	2'-8
20-22	12	12	16.5	18.5	12	6	4.5	7.5	12	12	3'-5	4'-7	4'-3	3'-4	4'-5	2'-10
23-25	12	12	17	20	12	6	4.5	7.5	18	12	3'-4	4'-5	3'-6	3'-3	4'-7	3'-3

FILL	QUANTITIES CONCRETE YD³/FT SLAB	FLOOR	WALLS	TOTAL	STEEL LBS/FT
0	.946	1.080	1.291	3.317	421.87
1	1.030	1.123	1.291	3.444	420.97
2	.863	.953	1.291	3.107	478.58
3	.738	.910	1.291	2.939	445.08
4	.738	.910	1.291	2.939	417.63
5-7	.738	.995	1.291	3.024	454.53
8-10	.863	1.080	1.291	3.234	491.47
11-13	1.030	1.250	1.291	3.571	486.39
14-16	1.155	1.377	1.291	3.823	502.74
17-19	1.280	1.505	1.291	4.076	521.71
20-22	1.405	1.632	1.291	4.328	566.26
23-25	1.488	1.759	1.291	4.538	573.89

* THESE DIMENSIONS ARE CORRECT FOR 38' LONG STANDARD SECTIONS ONLY. DIMENSIONS MUST BE RECALCULATED FOR ALL OTHER SECTION LENGTHS.

NOTES:

1. SEE DRAWING TWRCB-G1-87 FOR GENERAL INFORMATION, SPECIFICATIONS, AND DESIGN STRESSES.

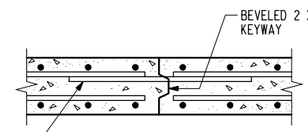

TOP SLAB CONSTRUCTION JOINT DETAIL

BENT BAR DETAIL

BARS	D
4	3
5	3¾
6	4½
7	5¼

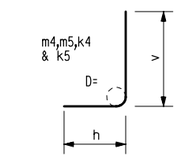

NOTE:
ALL DIMENSIONS ARE OUT TO OUT.
D = PIN DIAMETER.

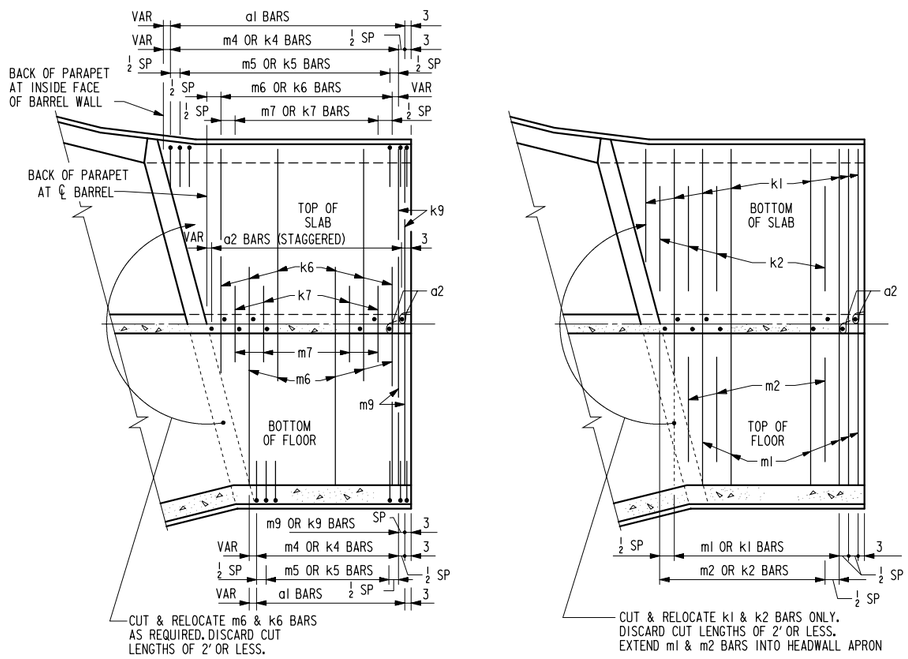

END SECTION - PLAN VIEW (KEYWAY NOT SHOWN)

NOTE: END SECTION DETAILS SHOWN ARE FOR A 15° SKEW BARREL. USE FOR SKEWS OF 30° & 45° BY INCREASING THE NUMBER OF TRANSVERSE REINFORCING BARS REQUIRED TO BE CUT & RELOCATED.

NOTE : ALL LONGITUDINAL BARREL STEEL SHALL EXTEND AT LEAST TO THE BACKFACE OF PARAPET.

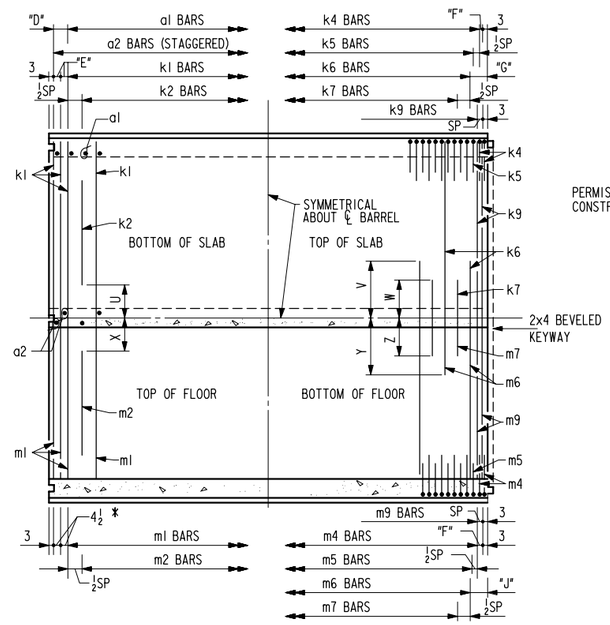

STANDARD SECTION PLAN VIEW

NOTE: TYPICAL FOR LENGTHS OF 38'.
(KEYWAY IS TO BE OMITTED WHEN BELL JOINTS ARE USED)

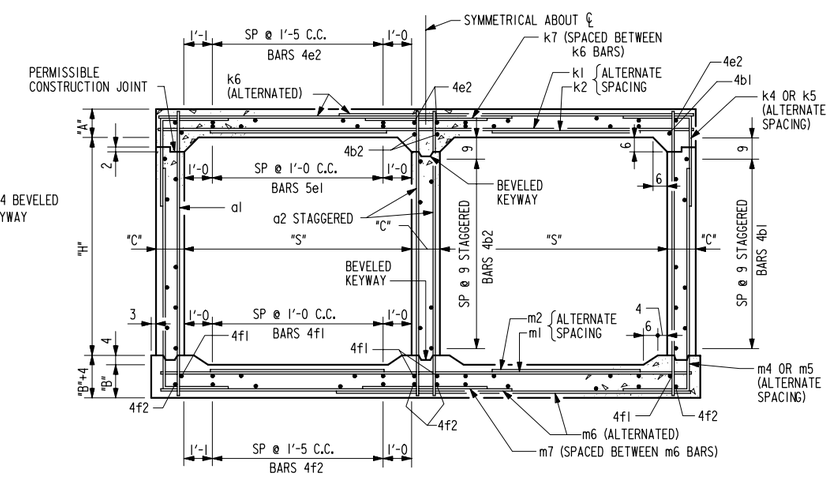

BARREL SECTION

LATEST REVISION DATE : 12-5-96

APPROVED BY : William A. Lundquist

STANDARD DESIGN

CULVERT BARREL DETAILS

FOR
TWIN REINFORCED CONCRETE BOX CULVERTS

IOWA DEPARTMENT OF TRANSPORTATION - HIGHWAY DIVISION

JULY , 1987

TWRCB 12-12-87

REVISED: 12/96 ; KEYWAY NOTATION CHANGED, DOWEL BAR LENGTH CHANGED.
TWRCB 12-12-87

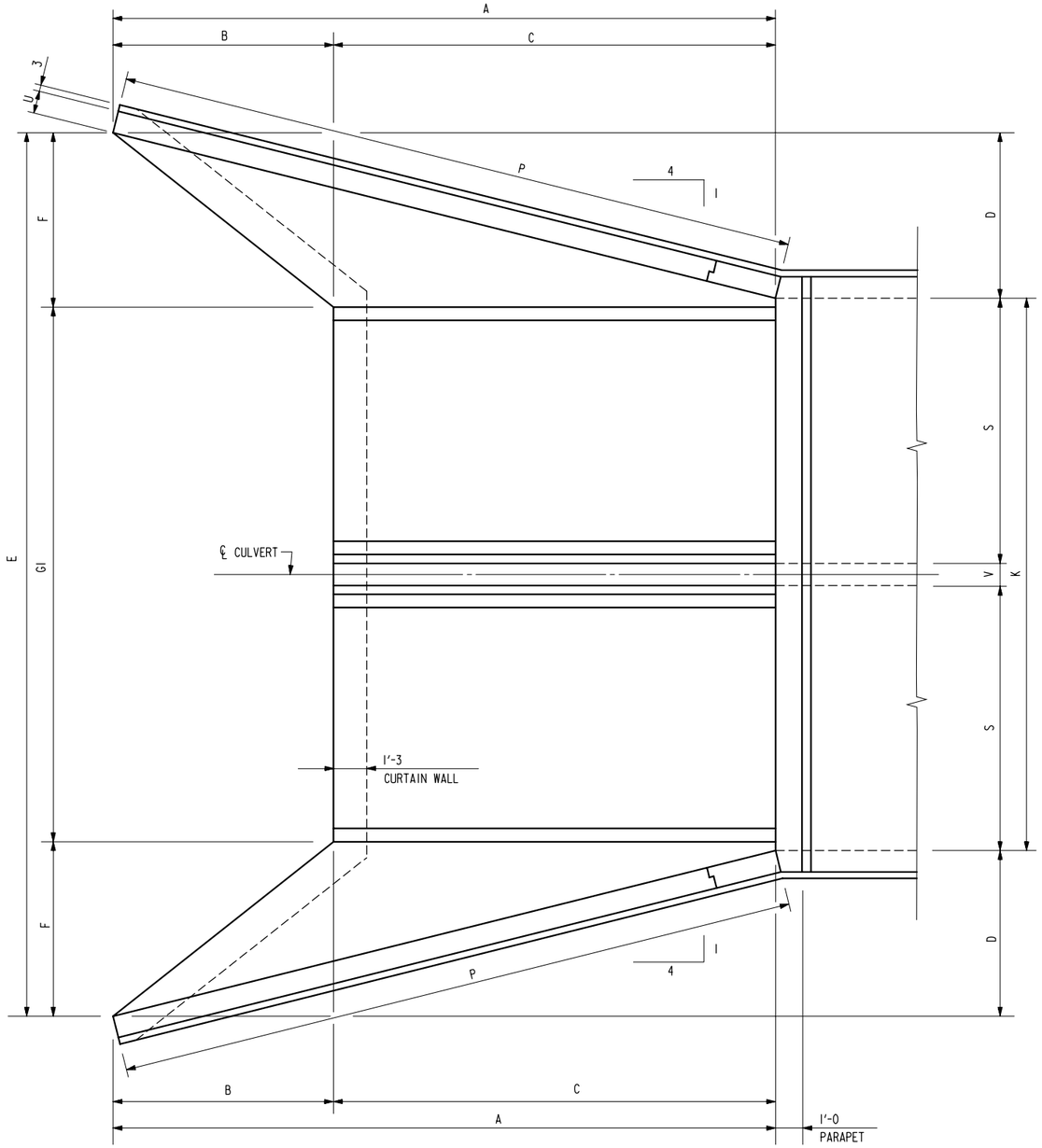

PLAN VIEW

DIMENSION TABLE

S X H	12' X 12'	12' X 10'	12' X 8'	12' X 6'	10' X 12'	10' X 10'	10' X 8'	10' X 6'	8' X 10'	8' X 8'	8' X 6'	S X H
A	37'-0	31'-0	25'-0	19'-0	37'-0	31'-0	25'-0	19'-0	31'-0	25'-0	19'-0	A
B	12'-4	10'-4	8'-4	6'-4	12'-4	10'-4	8'-4	6'-4	10'-4	8'-4	6'-4	B
C	24'-8	20'-8	16'-8	12'-8	24'-8	20'-8	16'-8	12'-8	20'-8	16'-8	12'-8	C
D	9'-3	7'-9	6'-3	4'-9	9'-3	7'-9	6'-3	4'-9	7'-9	6'-3	4'-9	D
E	43'-6	40'-4	37'-4	34'-3	39'-6	36'-4	33'-4	30'-3	32'-4	29'-4	26'-3	E
F	9'-7	8'-1	6'-7	5'-1	9'-7	8'-1	6'-7	5'-1	8'-1	6'-7	5'-1	F
GI	24'-4	24'-2	24'-2	24'-1	20'-4	20'-2	20'-2	20'-1	16'-2	16'-2	16'-1	GI
G2	25'-6 5/8	25'-4 5/8	25'-4 1/2	25'-3 3/8	21'-6 5/8	21'-4 5/8	21'-4 1/2	21'-3 3/8	17'-4 5/8	17'-4 1/2	17'-3 3/8	G2
G3	15'-7 3/8	13'-1 3/8	10'-7 1/2	8'-1 1/2	15'-7 3/8	13'-1 3/8	10'-7 1/2	8'-1 1/2	13'-1 3/8	10'-7 1/2	8'-1 1/2	G3
G4	16'-5 1/8	13'-7	11'-1 1/8	8'-4 3/4	16'-5 7/8	13'-7	11'-1 1/8	8'-4 3/4	13'-7	11'-1 1/8	8'-4 3/4	G4
G5	3 1/8"	7 5/8"	7 5/8"	9 3/4"	3 1/8"	7 5/8"	7 5/8"	9 3/4"	7 5/8"	7 5/8"	9 3/4"	G5
K	25'-0	24'-10	24'-10	24'-9	21'-0	20'-10	20'-10	20'-9	16'-10	16'-10	16'-9	K
P	38'-1 5/8	31'-11 1/2	25'-9 1/4	19'-7	38'-1 5/8	31'-11 1/2	25'-9 1/4	19'-7	31'-11 1/2	25'-9 1/4	19'-7	P
RI	40'-1	33'-7	27'-1	20'-7	40'-1	33'-7	27'-1	20'-7	33'-7	27'-1	20'-7	RI
R2	27'-0 1/8	22'-6 1/2	18'-0 7/8	13'-7 3/8	27'-0 1/8	22'-6 1/2	18'-0 7/8	13'-7 3/8	22'-6 1/2	18'-0 7/8	13'-7 3/8	R2
T	1'-2	1'-2	1'-2	1'-2	1'-1	1'-1	1'-1	1'-1	11"	11"	11"	T
U	1'-0	10"	10"	9"	1'-0	10"	10"	9"	10"	10"	9"	U
V	1'-0	10"	10"	9"	1'-0	10"	10"	9"	10"	10"	9"	V
W	5'-0	4'-6	4'-0	3'-6	5'-0	4'-6	4'-0	3'-6	4'-6	4'-0	3'-6	W

NOTES:

1. SEE DRAWING TWRCB-GI-87 FOR GENERAL INFORMATION, SPECIFICATIONS, AND DESIGN STRESSES.
2. SEE DRAWING TWH 0-2-87 & 0-3-87 FOR LOCATION OF CERTAIN DIMENSIONS TABULATED.
3. SEE DRAWING TWH 0-4-87 FOR HEADWALL NOTES.

LATEST REVISION DATE : 03-06

APPROVED BY :

STANDARD DESIGN

FLARED WING HEADWALLS

FOR

TWIN REINFORCED CONCRETE BOX CULVERTS

IOWA DEPARTMENT OF TRANSPORTATION - HIGHWAY DIVISION

JULY , 1987

TWH 0-1-87

REVISED 03-06 - ADDED 'K' DIMENSION TO PLAN VIEW AND DIMENSION TABLE.
TWH 0-1-87

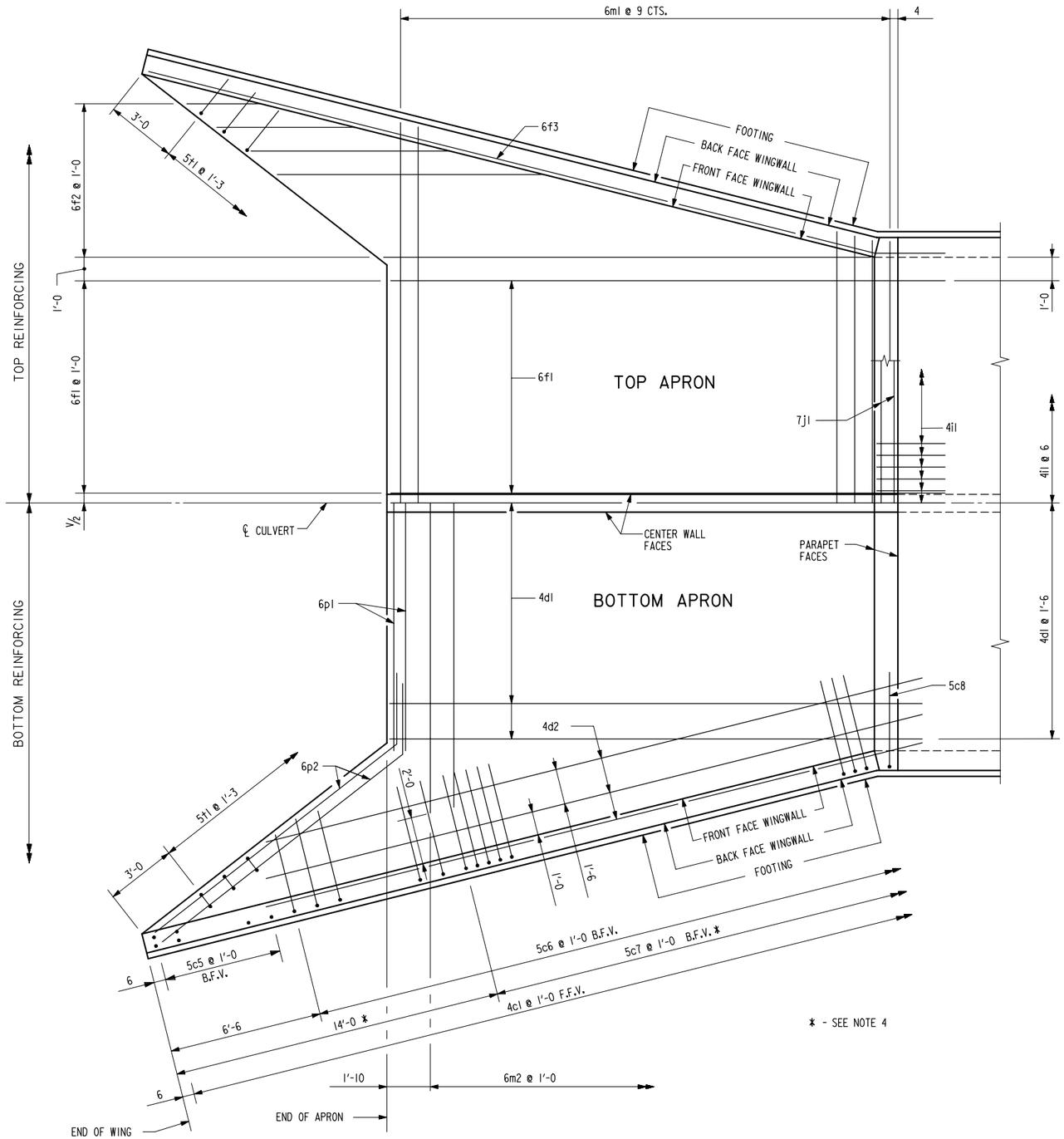

PLAN VIEW - TOP & BOTTOM OF APRON REINFORCING BARS

CULVERT HEIGHT (H)	ANGLE θ°
6'	38° 45'
8'	38° 19'
10'	38° 02'
12'	37° 51'

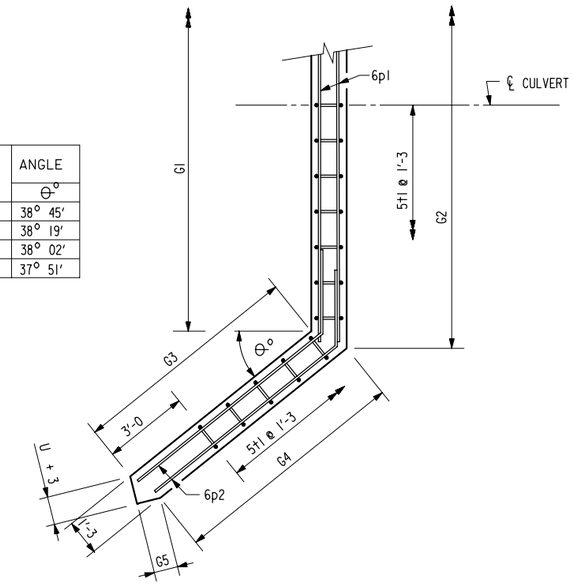

PLAN

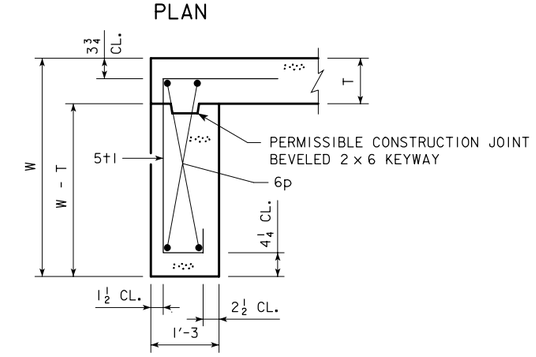

SECTION

CURTAIN WALL DETAILS

NOTES :

1. BAR SPACINGS AND POSITIONS SHOWN ARE SIMILAR FOR ALL SIZES OF HEADWALLS IN THIS STANDARD.
2. WINGWALL BARS CONSISTENTLY REFERENCED FROM END OF WING FOR ALL HEADWALLS.
3. TOP TRANSVERSE FLOOR BARS ARE REFERENCED APPROXIMATELY 4" FROM THE BACK OF THE PARAPET FOR ALL HEADWALLS.
4. THERE ARE NO 5c7 BARS IN THE 6' HEIGHT HEADWALL.
5. FOR DIMENSION TABLE SEE DRAWING TWH 0-1-87.
6. FOR REINFORCING IN CURTAIN WALL SEE CURTAIN WALL DETAILS THIS DRAWING.

LATEST REVISION DATE : 04-07

APPROVED BY :

STANDARD DESIGN

FLARED WING HEADWALLS

FOR

TWIN REINFORCED CONCRETE BOX CULVERTS

IOWA DEPARTMENT OF TRANSPORTATION - HIGHWAY DIVISION

JULY , 1987

TWH 0-2-87

REVISION - 04-07 - ADDED PERMISSIBLE CONSTRUCTION JOINT IN CURTAIN WALL.
TWH 0-2-87

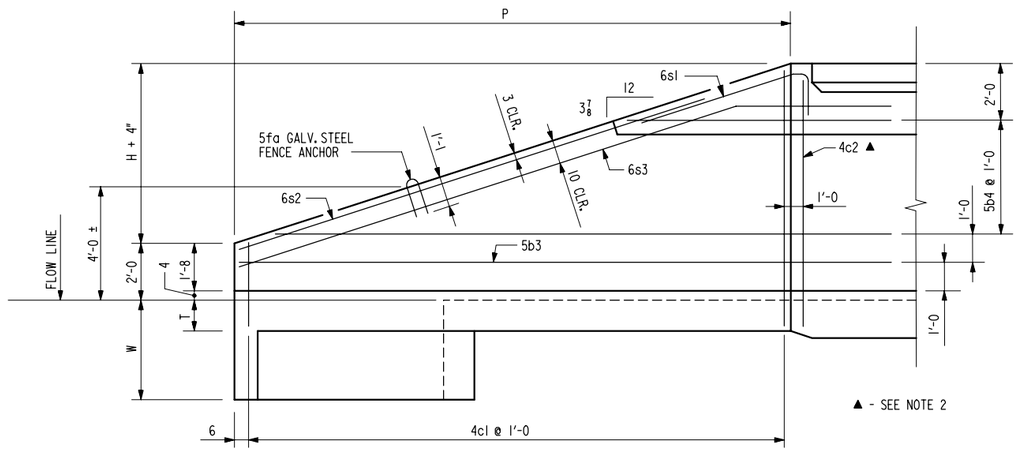

TYPICAL VIEW - FRONT FACE REINFORCING

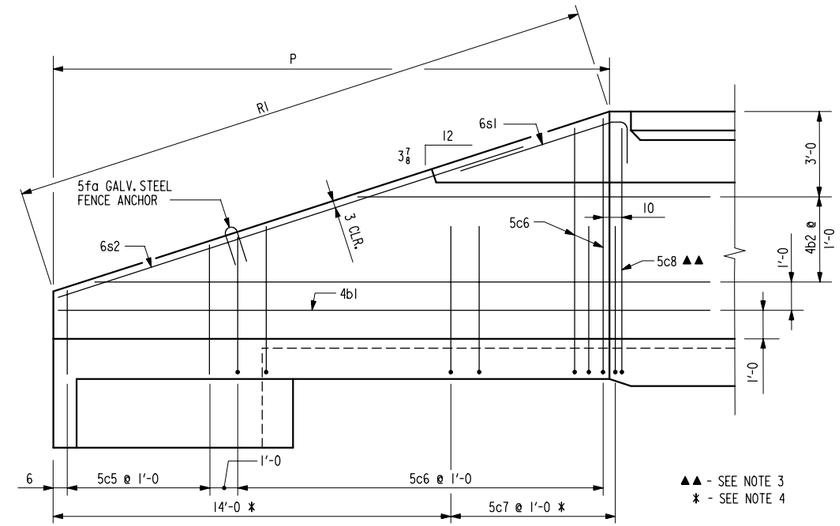

TYPICAL VIEW - BACK FACE REINFORCING

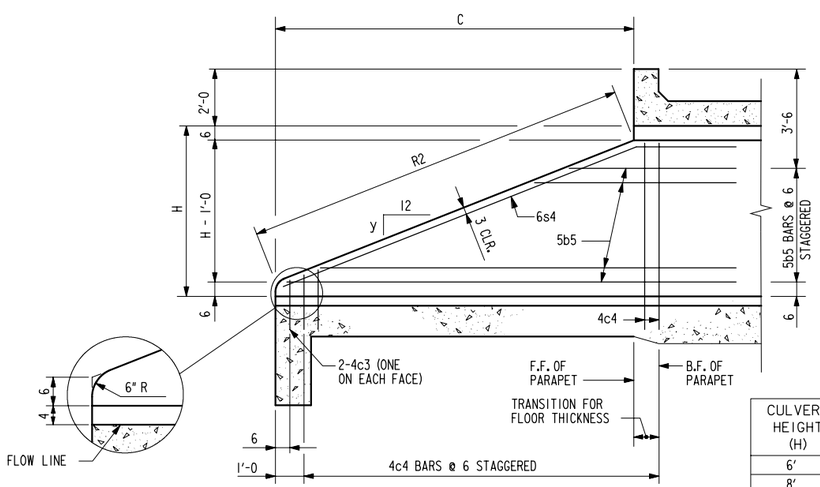

CULVERT HEIGHT (H)	SLOPE y INCHES
6'	$4\frac{3}{4}$
8'	$5\frac{1}{16}$
10'	$5\frac{1}{4}$
12'	$5\frac{3}{8}$

TYPICAL VIEW - CENTER WALL

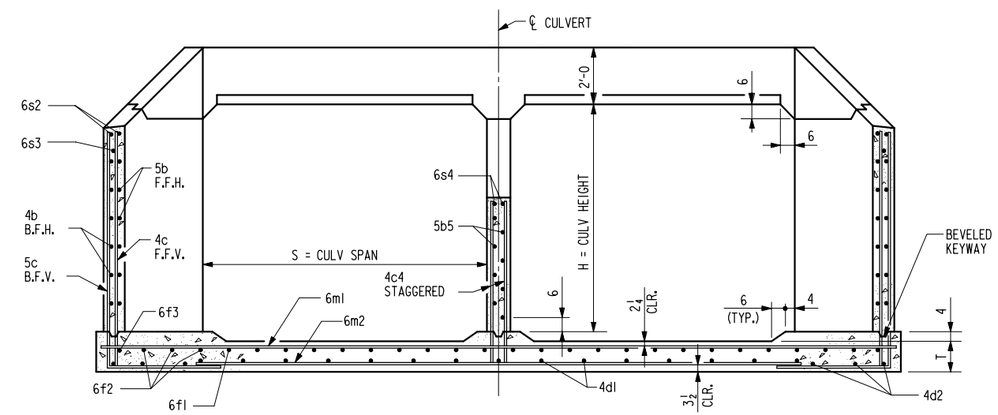

TYPICAL SECTION - NEAR CENTER OF APRON

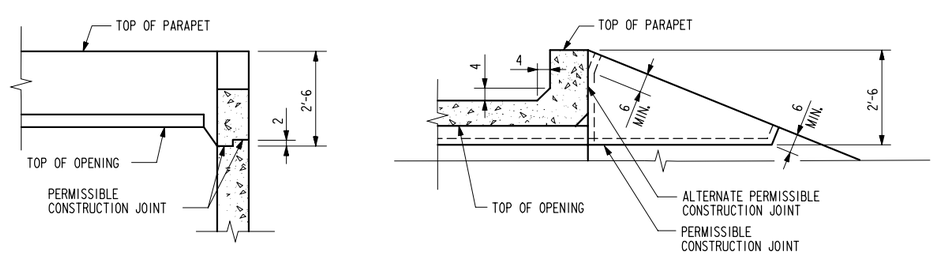

TOP OF WINGWALL DETAILS

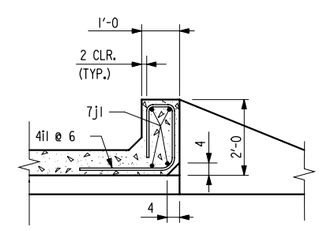

SECTION THRU PARAPET

NOTES :

1. BAR SPACINGS AND POSITIONS SHOWN ARE SIMILAR FOR ALL SIZES OF HEADWALLS IN THIS STANDARD.
2. ONE 4c2 BAR, HEADWALL HEIGHTS OF H=6', H=8', H=10' AND TWO 4c2 BARS, HEADWALL HEIGHT OF H=12'.
3. ONE 5c8 BAR, HEADWALL HEIGHTS OF H=6', H=8', H=10' AND TWO 5c8 BARS, HEADWALL HEIGHT OF H=12'.
4. NOT APPLICABLE TO HEADWALL HEIGHT OF H=6'.
5. FOR DIMENSION TABLE SEE DRAWING TWH 0-1-87.

LATEST REVISION DATE : 1-1-98

APPROVED BY : William A. Lundquist

STANDARD DESIGN

FLARED WING HEADWALLS

FOR

TWIN REINFORCED CONCRETE BOX CULVERTS

IOWA DEPARTMENT OF TRANSPORTATION - HIGHWAY DIVISION

JULY , 1987

TWH 0-3-87

REVISED 1/98; CLEAR DISTANCE TO 4i1 BAR CHANGED.
TWH 0-3-87

BILL OF REINFORCING FOR ONE HEADWALL 0° SKEW CULVERT SPAN x CULVERT HEIGHT

LOCATION	SHAPE	BAR	12' X 12'			12' X 10'			12' X 8'			12' X 6'			10' X 12'			10' X 10'			10' X 8'			10' X 6'			8' X 10'			8' X 8'			8' X 6'			BAR
			NO.	LENGTH	WT.	NO.	LENGTH	WT.	NO.	LENGTH	WT.	NO.	LENGTH	WT.	NO.	LENGTH	WT.	NO.	LENGTH	WT.	NO.	LENGTH	WT.	NO.	LENGTH	WT.	NO.	LENGTH	WT.	NO.	LENGTH	WT.	NO.	LENGTH	WT.	
FENCE ANCHOR (GALV.)		5fa	2	3'-1	6	2	3'-1	6	2	3'-1	6	2	3'-1	6	2	3'-1	6	2	3'-1	6	2	3'-1	6	2	3'-1	6	2	3'-1	6	2	3'-1	6	2	3'-1	6	5fa
WINGWALL, B.F.H.		4b1	2	40'-11	57	2	34'-9	46	2	28'-7	38	2	22'-5	30	2	40'-11	57	2	34'-9	46	2	28'-7	38	2	22'-5	30	2	34'-9	46	2	28'-7	38	2	22'-5	30	4b1
WINGWALL, B.F.H.		4b2	20 VAR	2 EACH 11'-8 TO 39'-6	342	16 VAR	2 EACH 11'-8 TO 33'-4	240	12 VAR	2 EACH 11'-8 TO 27'-2	156	8 VAR	2 EACH 11'-8 TO 21'-0	87	20 VAR	2 EACH 11'-8 TO 39'-6	342	16 VAR	2 EACH 11'-8 TO 33'-4	240	12 VAR	2 EACH 11'-8 TO 27'-2	156	8 VAR	2 EACH 11'-8 TO 21'-0	87	16 VAR	2 EACH 11'-8 TO 33'-4	240	12 VAR	2 EACH 11'-8 TO 27'-2	156	8 VAR	2 EACH 11'-8 TO 21'-0	87	4b2
WINGWALL, F.F.H.		5b3	2	40'-11	90	2	34'-9	72	2	28'-7	60	2	22'-5	47	2	40'-11	90	2	34'-9	72	2	28'-7	60	2	22'-5	47	2	34'-9	72	2	28'-7	60	2	22'-5	47	5b3
WINGWALL, F.F.H.		5b4	22 VAR	2 EACH 8'-7 TO 39'-6	552	18 VAR	2 EACH 8'-7 TO 33'-4	393	14 VAR	2 EACH 8'-7 TO 27'-2	261	10 VAR	2 EACH 8'-7 TO 21'-0	154	22 VAR	2 EACH 8'-7 TO 39'-6	552	18 VAR	2 EACH 8'-7 TO 33'-4	393	14 VAR	2 EACH 8'-7 TO 27'-2	261	10 VAR	2 EACH 8'-7 TO 21'-0	154	18 VAR	2 EACH 8'-7 TO 33'-4	394	14 VAR	2 EACH 8'-7 TO 27'-2	261	10 VAR	2 EACH 8'-7 TO 21'-0	154	5b4
CENTER WALL, BOTH F.H.		5b5	21 VAR	4'-10 TO 27'-3	351	17 VAR	4'-10 TO 23'-3	249	13 VAR	4'-11 TO 19'-3	164	9 VAR	5'-1 TO 15'-3	95	21 VAR	4'-10 TO 27'-3	351	17 VAR	4'-10 TO 23'-3	249	13 VAR	4'-11 TO 19'-3	164	9 VAR	5'-1 TO 15'-3	95	17 VAR	4'-10 TO 23'-3	249	13 VAR	4'-11 TO 19'-3	164	9 VAR	5'-1 TO 15'-3	95	5b5
WINGWALL, F.F.V.		4c1	76 VAR	2 EACH 2'-10 TO 14'-10	448	64 VAR	2 EACH 2'-10 TO 12'-11	337	52 VAR	2 EACH 2'-10 TO 11'-0	240	40 VAR	2 EACH 2'-10 TO 9'-0	158	76 VAR	2 EACH 2'-9 TO 14'-9	444	64 VAR	2 EACH 2'-9 TO 12'-10	333	52 VAR	2 EACH 2'-9 TO 10'-11	237	40 VAR	2 EACH 2'-9 TO 8'-11	156	64 VAR	2 EACH 2'-7 TO 12'-8	326	52 VAR	2 EACH 2'-7 TO 10'-9	232	40 VAR	2 EACH 2'-7 TO 8'-9	151	4c1
WINGWALL, F.F.V.		4c2	4	13'-7	36	2	12'-0	16	2	10'-0	13	2	8'-0	11	4	13'-7	36	2	12'-0	16	2	10'-0	13	2	8'-0	11	2	12'-0	16	2	10'-0	13	2	8'-0	11	4c2
CENTER WALL, BOTH F.V.		4c3	2	1'-9	2	2	1'-9	2	2	1'-9	2	2	1'-9	2	2	1'-8	2	2	1'-8	2	2	1'-8	2	2	1'-8	2	2	1'-6	2	2	1'-6	2	2	1'-6	2	4c3
CENTER WALL, BOTH F.V.		4c4	50 VAR	2'-0 TO 12'-11	249	42 VAR	2'-0 TO 10'-11	181	34 VAR	1'-11 TO 8'-10	122	26 VAR	1'-11 TO 6'-10	76	50 VAR	1'-11 TO 12'-10	246	42 VAR	1'-11 TO 10'-10	179	34 VAR	1'-10 TO 8'-9	120	26 VAR	1'-10 TO 6'-9	75	42 VAR	1'-9 TO 10'-8	174	34 VAR	1'-8 TO 8'-7	116	26 VAR	1'-8 TO 6'-7	72	4c4
WINGWALL, B.F.V.		5c5	12 VAR	2 EACH 2'-10 TO 4'-6	46	12 VAR	2 EACH 2'-10 TO 4'-6	46	12 VAR	2 EACH 2'-10 TO 4'-6	46	12 VAR	2 EACH 2'-10 TO 4'-6	46	12 VAR	2 EACH 2'-9 TO 4'-5	45	12 VAR	2 EACH 2'-9 TO 4'-5	45	12 VAR	2 EACH 2'-9 TO 4'-5	45	12 VAR	2 EACH 2'-9 TO 4'-5	45	12 VAR	2 EACH 2'-7 TO 4'-3	43	12 VAR	2 EACH 2'-7 TO 4'-3	43	12 VAR	2 EACH 2'-7 TO 4'-3	43	5c5
WINGWALL, B.F.V.		5c6	64 VAR	2 EACH 8'-10 TO 18'-10	923	52 VAR	2 EACH 8'-10 TO 16'-11	698	40 VAR	2 EACH 8'-10 TO 15'-0	497	28 VAR	2 EACH 8'-10 TO 13'-0	319	64 VAR	2 EACH 8'-9 TO 18'-9	918	52 VAR	2 EACH 8'-9 TO 16'-10	694	40 VAR	2 EACH 8'-9 TO 14'-11	494	28 VAR	2 EACH 8'-9 TO 12'-11	316	52 VAR	2 EACH 8'-7 TO 16'-8	685	40 VAR	2 EACH 8'-7 TO 14'-9	487	28 VAR	2 EACH 8'-7 TO 12'-9	312	5c6
WINGWALL, B.F.V.		5c7	50	10'-6	548	38	10'-6	416	26	10'-6	285	-	-	-	50	10'-6	548	38	10'-6	416	26	10'-6	285	-	-	-	38	10'-6	416	26	10'-6	285	-	-	-	5c7
WINGWALL, B.F.V.		5c8	4	17'-7	73	2	16'-11	35	2	15'-0	31	2	13'-0	27	4	17'-6	73	2	16'-10	35	2	14'-11	31	2	12'-11	27	2	16'-8	35	2	14'-9	31	2	12'-9	27	5c8
APRON, LONGIT.,BOTT.		4d1	17	27'-6	312	17	23'-6	267	17	19'-6	221	17	15'-6	176	15	27'-6	276	15	23'-6	235	15	19'-6	195	15	15'-6	155	11	23'-6	173	11	19'-6	143	11	15'-6	114	4d1
APRON, LONGIT.,BOTT.		4d2	6	35'-8	143	6	29'-6	118	6	23'-5	94	6	17'-4	69	6	35'-8	143	6	29'-6	118	6	23'-5	94	6	17'-4	69	6	29'-6	118	6	23'-5	94	6	17'-4	69	4d2
APRON, LONGIT.,TOP		6f1	24	27'-6	991	24	23'-6	847	24	19'-6	703	24	15'-6	559	20	27'-6	826	20	23'-6	706	20	19'-6	586	20	15'-6	466	16	23'-6	565	16	19'-6	469	16	15'-6	372	6f1
APRON, LONGIT.,TOP		6f2	16 VAR	2 EACH 5'-10 TO 24'-10	368	14 VAR	2 EACH 4'-6 TO 20'-10	266	10 VAR	2 EACH 5'-10 TO 16'-10	170	8 VAR	2 EACH 4'-6 TO 12'-10	104	16 VAR	2 EACH 5'-10 TO 24'-10	368	14 VAR	2 EACH 4'-6 TO 20'-10	266	10 VAR	2 EACH 5'-10 TO 16'-10	170	8 VAR	2 EACH 4'-6 TO 12'-10	104	14 VAR	2 EACH 4'-6 TO 20'-10	266	10 VAR	2 EACH 5'-10 TO 16'-10	170	8 VAR	2 EACH 4'-6 TO 12'-10	104	6f2
APRON, LONGIT.,TOP		6f3	2	40'-11	129	2	34'-9	104	2	28'-7	86	2	22'-5	67	2	40'-11	129	2	34'-9	104	2	28'-7	86	2	22'-5	67	2	34'-9	104	2	28'-7	86	2	22'-5	67	6f3
PARAPET, VERTICAL		4i1	51	6'-1	207	49	6'-1	199	49	6'-1	199	49	6'-1	199	43	6'-1	175	41	6'-1	167	41	6'-1	167	41	6'-1	167	33	6'-1	134	33	6'-1	134	33	6'-1	135	4i1
PARAPET, HORIZONTAL		7j1	4	26'-8	218	4	26'-2	214	4	26'-2	214	4	25'-11	212	4	22'-8	186	4	22'-2	181	4	22'-2	181	4	21'-11	179	4	18'-2	149	4	17'-11	146	4	17'-11	146	7j1
APRON, TRANS., TOP		6m1	34 VAR	26'-10 TO 39'-3	1687	29 VAR	26'-4 TO 36'-10	1376	23 VAR	26'-4 TO 34'-7	1052	18 VAR	26'-1 TO 32'-6	792	34 VAR	22'-10 TO 35'-3	1483	29 VAR	22'-4 TO 32'-10	1201	23 VAR	22'-4 TO 30'-7	914	18 VAR	22'-1 TO 28'-5	683	29 VAR	18'-4 TO 28'-10	1027	23 VAR	18'-4 TO 26'-7	776	18 VAR	18'-1 TO 24'-6	576	6m1
APRON, TRANS., BOTT.		6m2	24 VAR	20'-9 TO 32'-3	955	20 VAR	20'-7 TO 30'-1	761	16 VAR	20'-7 TO 28'-1	585	12 VAR	20'-6 TO 26'-0	419	24 VAR	16'-9 TO 28'-3	811	20 VAR	16'-7 TO 26'-1	641	16 VAR	16'-7 TO 24'-1	489	12 VAR	16'-6 TO 22'-0	347	20 VAR	12'-7 TO 22'-1	521	16 VAR	12'-7 TO 20'-1	393	12 VAR	12'-6 TO 18'-0	275	6m2
CURTAIN, HORIZONTAL△		6p1	4	25'-6	154	4	25'-4	152	4	25'-4	152	4	25'-3	152	4	21'-6	129	4	21'-4	128	4	21'-4	128	4	21'-3	128	4	17'-4	104	4	17'-4	104	4	17'-3	104	6p1
CURTAIN, HORIZONTAL		6p2	8	18'-7	223	8	16'-1	193	8	13'-7	163	8	11'-10	142	8	18'-7	223	8	16'-1	193	8	13'-7	163	8	11'-10	142	8	16'-1	193	8	13'-7	163	8	11'-10	142	6p2
WING SLOPE, BOTH F.		6s1	4	7'-8	46	4	7'-8	46	4	7'-8	46	4	7'-8	46	4	7'-8	46	4	7'-8	46	4	7'-8	46	4	7'-8	46	4	7'-8	46	4	7'-8	46	4	7'-8	46	6s1
WING SLOPE, BOTH F.		6s2	4	37'-6	225	4	31'-0	186	4	24'-6	147	4	18'-0	108	4	37'-6	225	4	31'-0	186	4	24'-6	147	4	18'-0	108	4	31'-0	186	4	24'-6	147	4	18'-0	108	6s2
WING SLOPE, F.F		6s3	2	42'-9	134	2	36'-3	109	2	29'-9	89	2	23'-3	70	2	42'-9	134	2	36'-3	109	2	29'-9	89	2	23'-3	70	2	36'-3	109	2	29'-9	89	2	23'-3	70	6s3
CENTER WALL, BOTH F.		6s4	2	29'-10	90	2	25'-4	76	2	20'-10	63	2	16'-5	49	2	29'-10	90	2	25'-4	76	2	20'-10	63	2	16'-5	49	2	25'-4	76	2	20'-10	63	2	16'-5	49	6s4
CURTAIN, VERT.		5t1	41	8'-0	342	37	7'-6	289	33	7'-0	241	29	6'-6	197	39	8'-0	325	35	7'-6	274	31	7'-0	226	27	6'-6	183	31	7'-6	242	27	7'-0	197	23	6'-6	156	5t1
ESTIMATED QUANTITIES ONE HEADWALL	REINF. STEEL		9947 lbs.			7940 lbs.			6146 lbs.			4419 lbs.			9279 lbs.			7357 lbs.			5656 lbs.			4014 lbs.			6717 lbs.			5114 lbs.			3570 lbs.			
	CONCRETE	PARAPET △	2.7	88.1 cu. yd.		2.6	64.7 cu. yd.		2.6	49.0 cu. yd.		2.5	34.1 cu. yd.		2.4	80.1 cu. yd.		2.3	58.1 cu. yd.		2.3	43.6 cu. yd.		2.2	30.0 cu. yd.		2.0	50.3 cu. yd.		2.0	37.4 cu. yd.		1.9	25.2 cu. yd.		
		WINGWALLS	28.1			16.9			11.4			6.2			28.1			16.9			11.4			6.2			16.9			11.4			6.2			
		FOOTINGS	57.3			45.2			35.0			25.4			49.6			38.9			29.9			21.6			31.4			24.0			17.1			

BENT BAR DETAILS

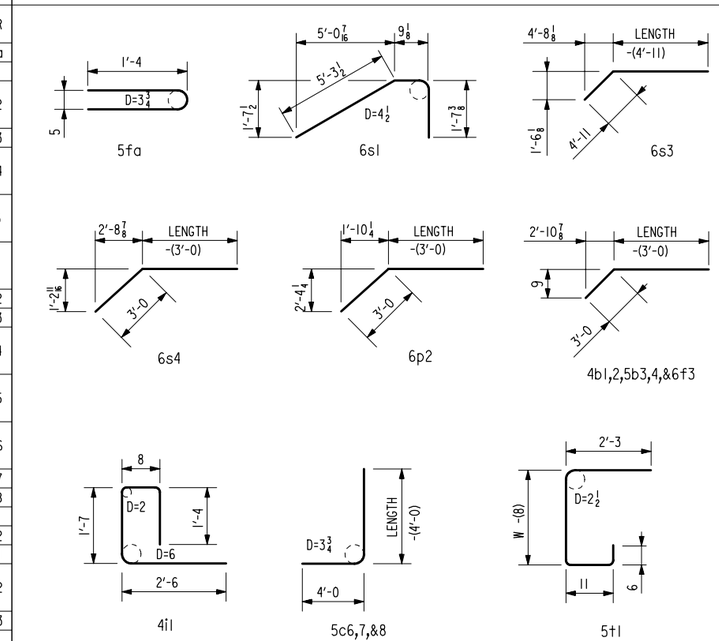

NOTE:
ALL DIMENSIONS ARE OUT TO OUT.
D = PIN DIAMETER.

△ NOTE: INCLUDES TOP OF WINGWALL QUANTITIES.

WEIGHT OF BARS OVER 40'-0 LONG INCLUDE AN ALLOWANCE OF 2'-0 FOR LAP.

NOTES:

1. SEE DRAWING TWRCB-G1-87 FOR GENERAL INFORMATION, SPECIFICATIONS, AND DESIGN STRESSES.

HEADWALL NOTES:

THIS HEADWALL IS BASED ON A 3:1 SLOPE NORMAL TO CENTERLINE OF ROADWAY.

THE SIDES OF THE FOOTING ARE TO BE FORMED TO INSURE CORRECT LINE AND GRADE.

ALL EXPOSED CORNERS OF 90° OR SHARPER ARE TO BE FILLETED WITH A ¾" DRESSED AND BEVELED STRIP.

ALL REINFORCING IS TO BE SECURELY WIRED IN PLACE BEFORE THE CONCRETE IS POURED. ALL SLAB AND FLOOR REINFORCING STEEL IS TO BE SUPPORTED BY BAR CHAIRS AT INTERVALS OF NOT MORE THAN 3'-0 IN EITHER DIRECTION AS OUTLINED IN THE STANDARD SPECIFICATIONS.

CLEAR DISTANCE FROM FACE OF CONCRETE TO NEAR REINFORCING BAR IS TO BE 2" UNLESS OTHERWISE NOTED OR SHOWN. CLEARANCE TO THE BOTTOM ENDS OF VERTICAL BARS SHALL BE 3 INCHES.

CONCRETE QUANTITIES ARE ESTIMATED FROM BACK OF PARAPET.

HORIZONTAL TAILS OF BARS "b" & "s" ESTIMATED TO EXTEND 2'-0 BEYOND BACK OF PARAPET (INTO END OF BARREL). LONGITUDINAL BARS "d", "6f1", AND "6f3" ESTIMATED TO PROJECT INTO END SECTION OF BARREL A MINIMUM OF 2'-0 BEYOND BACK OF PARAPET.

THE "LENGTH" COLUMN REFLECTS TOTAL NUMBER OF FEET NECESSARY TO MEET THESE REQUIREMENTS.

LATEST REVISION DATE : 02-10

APPROVED BY :

STANDARD DESIGN

FLARED WING HEADWALLS

FOR
TWIN REINFORCED CONCRETE BOX CULVERTS

IOWA DEPARTMENT OF TRANSPORTATION - HIGHWAY DIVISION

JULY , 1987

TWH 0-4-87

REVISED 02-10 - CHANGED THE 7J1 BAR LENGTH & WEIGHTS FOR THE 8x6 HEADWALL.
ENGLISHSIGNEDTWINCULVERTS.DGN - TWH 0-4-87

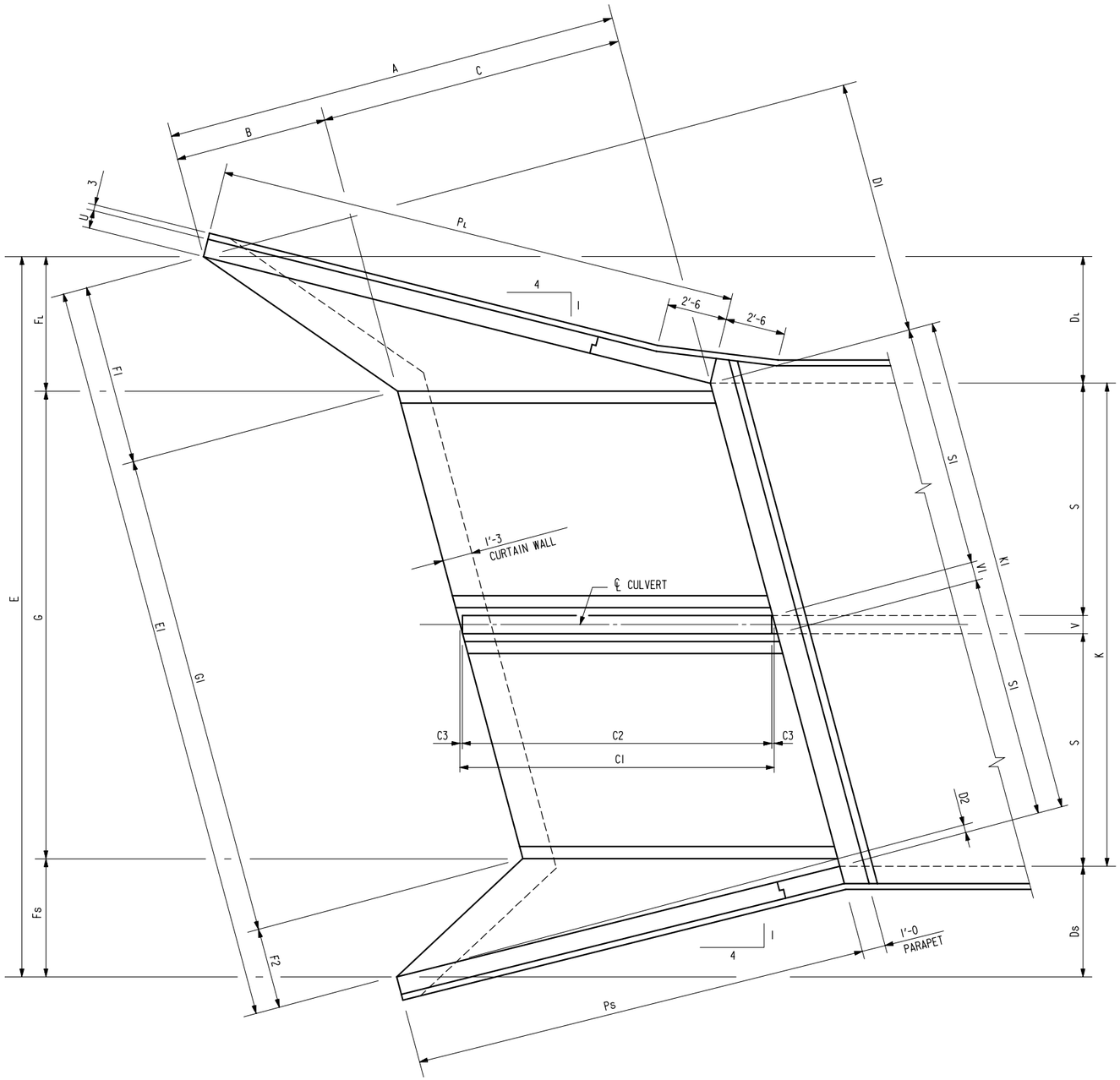

PLAN VIEW

DIMENSION TABLE

S X H	12' X 12'	12' X 10'	12' X 8'	12' X 6'	10' X 12'	10' X 10'	10' X 8'	10' X 6'	8' X 10'	8' X 8'	8' X 6'	S X H
A	37'-0	31'-0	25'-0	19'-0	37'-0	31'-0	25'-0	19'-0	31'-0	25'-0	19'-0	A
B	12'-4	10'-4	8'-4	6'-4	12'-4	10'-4	8'-4	6'-4	10'-4	8'-4	6'-4	B
C	24'-8	20'-8	16'-8	12'-8	24'-8	20'-8	16'-8	12'-8	20'-8	16'-8	12'-8	C
CI	25'-6 1/2	21'-4 3/4	17'-3	13'-1 3/8	25'-6 1/2	21'-4 3/4	17'-3	13'-1 3/8	21'-4 3/4	17'-3	13'-1 3/8	CI
C2	25'-3 1/4	21'-2 1/8	17'-0 3/8	12'-11	25'-3 1/4	21'-2 1/8	17'-0 3/8	12'-11	21'-2 1/8	17'-0 3/8	12'-11	C2
C3	1 5/8"	1 3/8"	1 3/8"	1 1/4"	1 5/8"	1 3/8"	1 3/8"	1 1/4"	1 3/8"	1 3/8"	1 1/4"	C3
DL	10'-3 1/8	8'-7 1/4	6'-11 1/4	5'-3 1/4	10'-3 1/8	8'-7 1/4	6'-11 1/4	5'-3 1/4	8'-7 1/4	6'-11 1/4	5'-3 1/4	DL
Ds	8'-11 3/4	7'-6 1/4	6'-0 3/4	4'-7 1/4	8'-11 3/4	7'-6 1/4	6'-0 3/4	4'-7 1/4	7'-6 1/4	6'-0 3/4	4'-7 1/4	Ds
DI	20'-6 1/2	17'-2 1/2	13'-10 1/2	10'-6 5/8	20'-6 1/2	17'-2 1/2	13'-10 1/2	10'-6 5/8	17'-2 1/2	13'-10 1/2	10'-6 5/8	DI
D2	7 1/2"	6 1/4"	5"	3 7/8"	7 1/2"	6 1/4"	5"	3 7/8"	6 1/4"	5"	3 7/8"	D2
E	44'-2 7/8	40'-11 3/8	37'-10	34'-7 1/2	40'-2 7/8	36'-11 3/8	33'-10	30'-7 1/2	32'-11 3/8	29'-10	26'-7 1/2	E
EI	45'-9 5/8	42'-4 3/4	39'-2	35'-10 1/4	41'-7 7/8	38'-3 1/8	35'-0 3/8	31'-8 1/2	34'-1 3/8	30'-10 5/8	27'-6 7/8	EI
FL	10'-7 1/8	8'-11 1/4	7'-3 1/4	5'-7 1/4	10'-7 1/8	8'-11 1/4	7'-3 1/4	5'-7 1/4	8'-11 1/4	7'-3 1/4	5'-7 1/4	FL
Fs	9'-3 3/4	7'-10 1/4	6'-4 3/4	4'-11 1/4	9'-3 3/4	7'-10 1/4	6'-4 3/4	4'-11 1/4	7'-10 1/4	6'-4 3/4	4'-11 1/4	Fs
FI	14'-3 3/8	12'-0 1/4	9'-9 1/8	7'-6	14'-3 3/8	12'-0 1/4	9'-9 1/8	7'-6	12'-0 1/4	9'-9 1/8	7'-6	FI
F2	6'-4	5'-4 3/8	4'-4 5/8	3'-5	6'-4	5'-4 3/8	4'-4 5/8	3'-5	5'-4 3/8	4'-4 5/8	3'-5	F2
G	24'-4	24'-2	24'-2	24'-1	20'-4	20'-2	20'-2	20'-1	16'-2	16'-2	16'-1	G
GI	25'-2 1/4	25'-0 1/4	25'-0 1/4	24'-11 1/4	21'-0 5/8	20'-10 1/2	20'-10 1/2	20'-9 1/2	16'-8 7/8	16'-8 7/8	16'-7 3/4	GI
G2	26'-5	26'-2 7/8	26'-2 7/8	26'-1 5/8	22'-3 3/8	22'-1 1/4	22'-1 1/8	22'-0	17'-11 1/2	17'-11 3/8	17'-10 1/4	G2
G3	18'-10 3/8	15'-10 1/4	12'-10	9'-9 3/4	18'-10 3/8	15'-10 1/4	12'-10	9'-9 3/4	15'-10 1/4	12'-10	9'-9 3/4	G3
G4	19'-6 5/8	16'-0 5/8	13'-0 1/2	9'-9 5/8	19'-6 5/8	16'-0 5/8	13'-0 1/2	9'-9 5/8	16'-0 5/8	13'-0 1/2	9'-9 5/8	G4
G5	13'-10 3/8	11'-7 3/4	9'-5	7'-2 3/8	13'-10 3/8	11'-7 3/4	9'-5	7'-2 3/8	11'-7 3/4	9'-5	7'-2 3/8	G5
G6	14'-11 1/4	12'-4 3/8	10'-1 3/4	7'-9 1/8	14'-11 1/4	12'-4 3/8	10'-1 3/4	7'-9 1/8	12'-4 3/8	10'-1 3/4	7'-9 1/8	G6
G7	2 5/8"	8 1/8"	8 1/8"	10 5/8"	2 5/8"	8 1/8"	8 1/8"	10 5/8"	8 1/8"	8 1/8"	10 5/8"	G7
G8	3 3/4"	7 1/2"	7 1/2"	9 1/4"	3 3/4"	7 1/2"	7 1/2"	9 1/4"	7 1/2"	7 1/2"	9 1/4"	G8
K	25'-0	24'-10	24'-10	24'-9	21'-0	20'-10	20'-10	20'-9	16'-10	16'-10	16'-9	K
KI	25'-10 5/8	25'-8 1/2	25'-8 1/2	25'-7 1/2	21'-8 7/8	21'-6 7/8	21'-6 7/8	21'-5 3/4	17'-5 1/8	17'-5 1/8	17'-4 1/8	KI
PL	42'-3 7/8	35'-5 1/2	28'-7 1/8	21'-8 3/4	42'-3 7/8	35'-5 1/2	28'-7 1/8	21'-8 3/4	35'-5 1/2	28'-7 1/8	21'-8 3/4	PL
Ps	37'-0 1/8	31'-0	25'-0	19'-0	37'-0 1/8	31'-0	25'-0	19'-0	31'-0	25'-0	19'-0	Ps
RL	44'-1	36'-11 1/8	29'-9 3/8	22'-7 5/8	44'-1	36'-11 1/8	29'-9 3/8	22'-7 5/8	36'-11 1/8	29'-9 3/8	22'-7 5/8	RL
Rs	39'-0 1/8	32'-8 1/8	26'-4 1/4	20'-0 3/8	39'-0 1/8	32'-8 1/8	26'-4 1/4	20'-0 3/8	32'-8 1/8	26'-4 1/4	20'-0 3/8	Rs
RI	27'-6 3/4	23'-0 1/8	18'-5	13'-10 1/8	27'-6 3/4	23'-0 1/8	18'-5	13'-10 1/8	23'-0 1/8	18'-5	13'-10 1/8	RI
SI	12'-5 1/8	12'-5 1/8	12'-5 1/8	12'-5 1/8	10'-4 1/4	10'-4 1/4	10'-4 1/4	10'-4 1/4	8'-3 3/8	8'-3 3/8	8'-3 3/8	SI
T	1'-2	1'-2	1'-2	1'-2	1'-1	1'-1	1'-1	1'-1	11"	11"	11"	T
U	1'-0	10"	10"	9"	1'-0	10"	10"	9"	10"	10"	9"	U
V	1'-0	10"	10"	9"	1'-0	10"	10"	9"	10"	10"	9"	V
VI	1'-0 3/8	10 3/8"	10 3/8"	9 3/8"	1'-0 3/8	10 3/8"	10 3/8"	9 3/8"	10 3/8"	10 3/8"	9 3/8"	VI
W	5'-0	4'-6	4'-0	3'-6	5'-0	4'-6	4'-0	3'-6	4'-6	4'-0	3'-6	W

NOTES:

1. SEE DRAWING TWRCB-GI-87 FOR GENERAL INFORMATION, SPECIFICATIONS, AND DESIGN STRESSES.
2. SEE DRAWING TWH 15-2-87 THRU 15-4-87 FOR LOCATION OF CERTAIN DIMENSIONS TABULATED.
3. SEE DRAWING TWH 15-5-87 FOR HEADWALL NOTES.

LATEST REVISION DATE : 12-5-96

APPROVED BY : William A. Lundquist

STANDARD DESIGN

FLARED WING HEADWALLS

FOR

TWIN REINFORCED CONCRETE BOX CULVERTS

IOWA DEPARTMENT OF TRANSPORTATION - HIGHWAY DIVISION

JULY , 1987

TWH 15-1-87

REVISED : 12/96 ; NOTE CORRECTED.
TWH 15-1-87

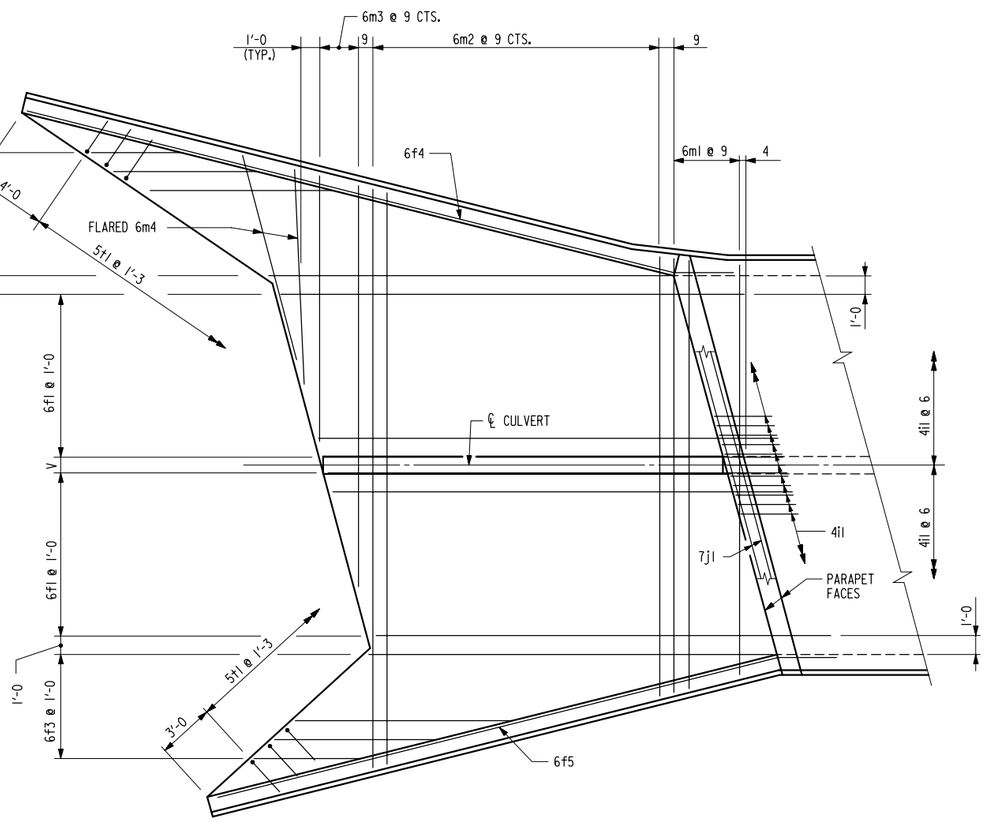

PLAN VIEW - TOP OF APRON REINFORCING BARS

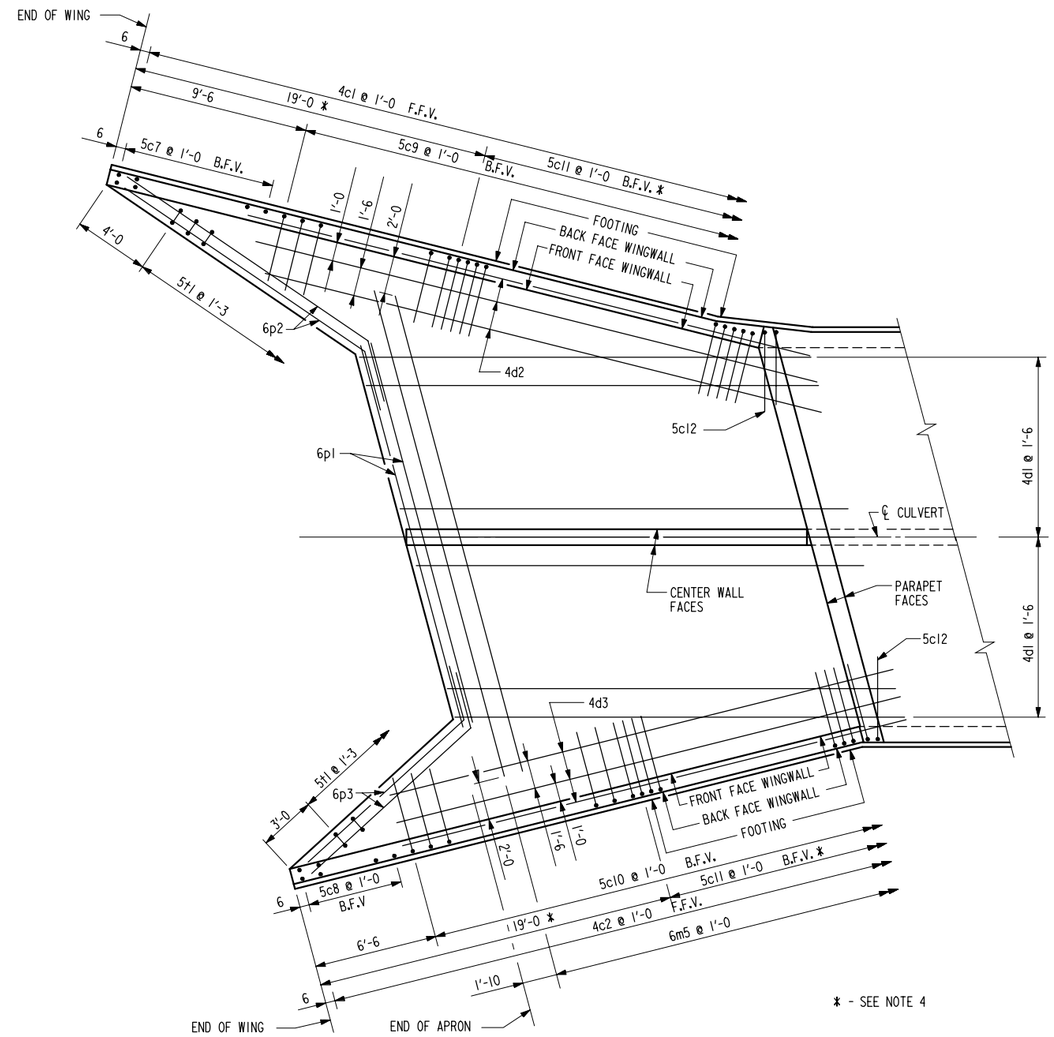

PLAN VIEW - BOTTOM OF APRON REINFORCING BARS

NOTES :

1. BAR SPACINGS AND POSITIONS SHOWN ARE SIMILAR FOR ALL SIZES OF HEADWALLS IN THIS STANDARD.
2. WINGWALL BARS CONSISTENTLY REFERENCED FROM END OF WING FOR ALL HEADWALLS.
3. TOP TRANSVERSE FLOOR BARS ARE REFERENCED APPROXIMATELY 4" FROM THE BACK OF THE PARAPET FOR ALL HEADWALLS.
4. THERE ARE NO 5c11 BARS IN THE 6' HEIGHT HEADWALL.
5. FOR DIMENSION TABLE SEE DRAWING TWH 15-1-87.
6. FOR REINFORCING IN CURTAIN WALL SEE CURTAIN WALL DETAILS ON DRAWING TWH 15-3-87.

LATEST REVISION DATE :

William A. Lundquist
APPROVED BY :

STANDARD DESIGN

FLARED WING HEADWALLS

FOR
TWIN REINFORCED CONCRETE BOX CULVERTS

IOWA DEPARTMENT OF TRANSPORTATION - HIGHWAY DIVISION

JULY , 1987

TWH 15-2-87

TWH 15-2-87

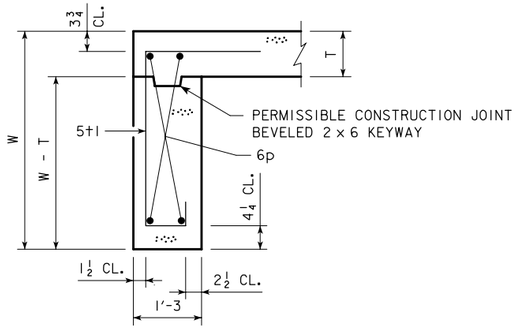

SECTION THRU CURTAIN WALL

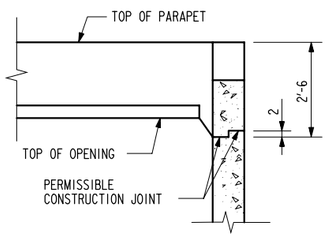

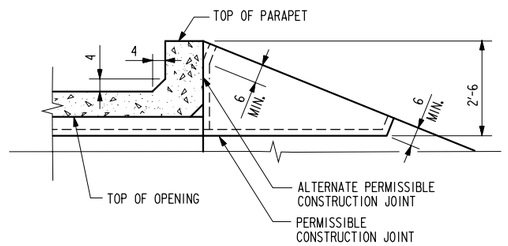

TOP OF WINGWALL DETAILS

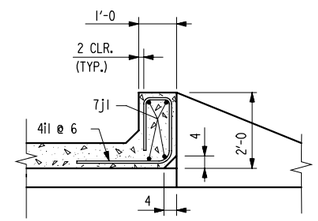

SECTION THRU PARAPET

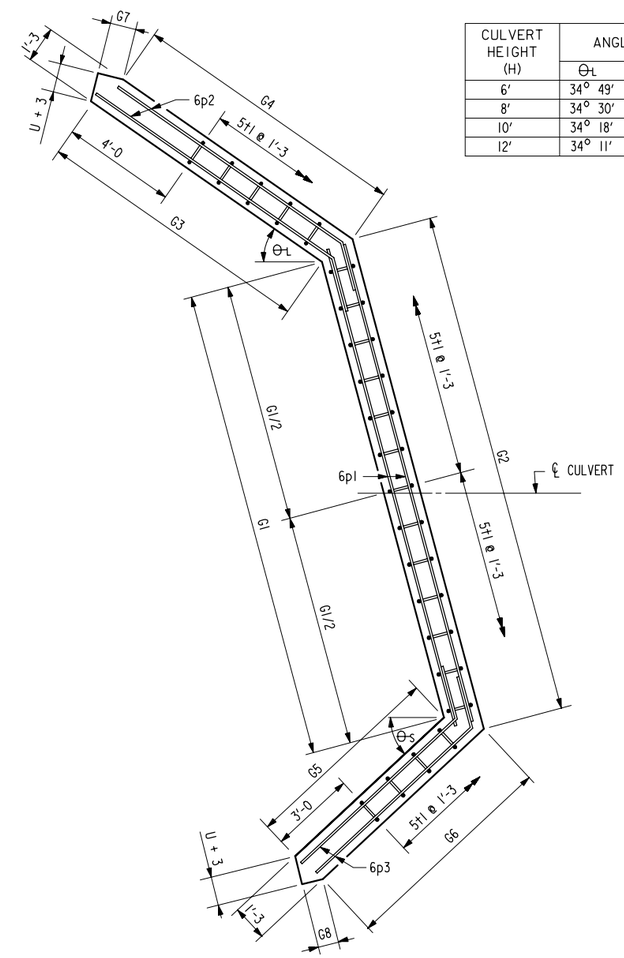

CULVERT HEIGHT (H)	ANGLE	
	θL	θS
6'	34° 49'	43° 22'
8'	34° 30'	42° 47'
10'	34° 18'	42° 25'
12'	34° 11'	42° 11'

CURTAIN WALL DETAIL

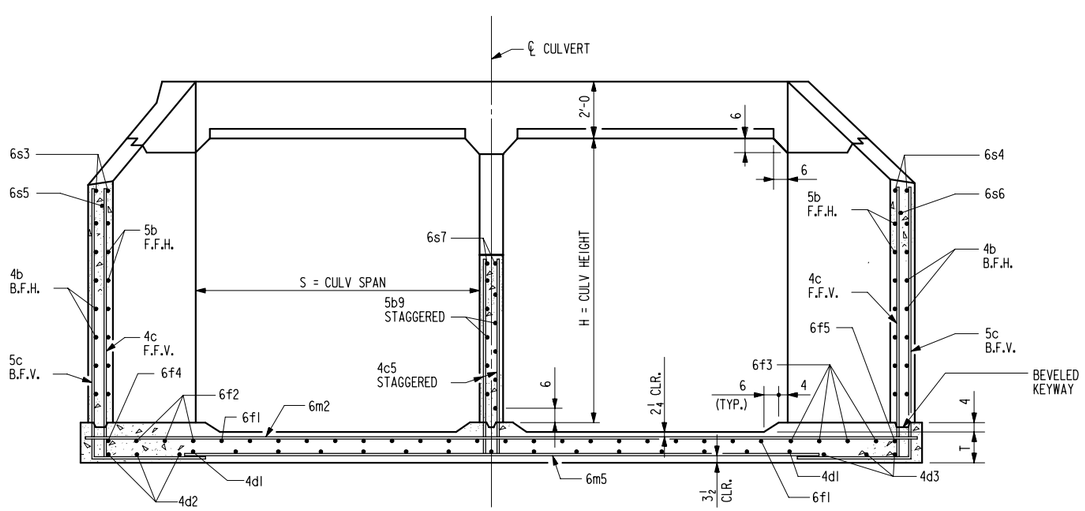

TYPICAL SECTION - NEAR CENTER OF APRON

NOTES:

1. SEE DRAWING TWRCB-G1-87 FOR GENERAL INFORMATION, SPECIFICATIONS, AND DESIGN STRESSES.
2. FOR DIMENSION TABLE SEE DRAWING TWH 15-1-87.

LATEST REVISION DATE : 04-07

APPROVED BY :

STANDARD DESIGN

FLARED WING HEADWALLS

FOR

TWIN REINFORCED CONCRETE BOX CULVERTS

IOWA DEPARTMENT OF TRANSPORTATION - HIGHWAY DIVISION

JULY , 1987

TWH 15-3-87

REVISION - 04-07 - ADDED PERMISSIBLE CONSTRUCTION JOINT IN CURTAIN WALL.
TWH 15-3-87

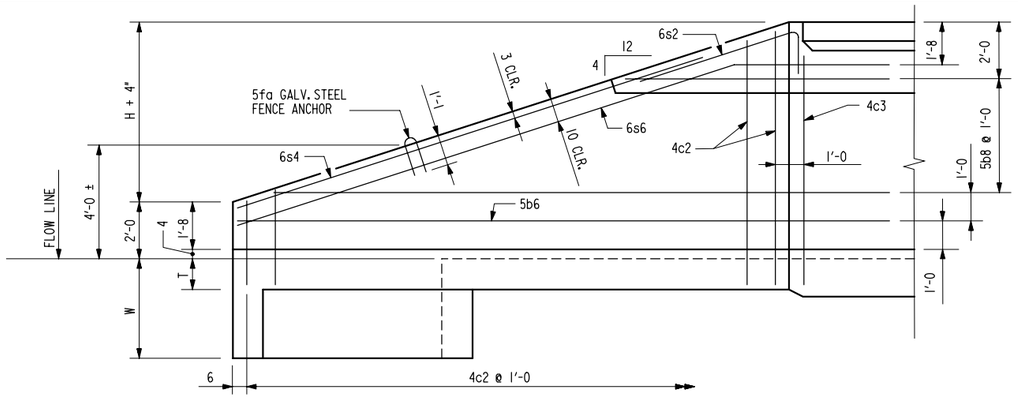

TYPICAL VIEW - FRONT FACE REINFORCING SHORT WINGWALL

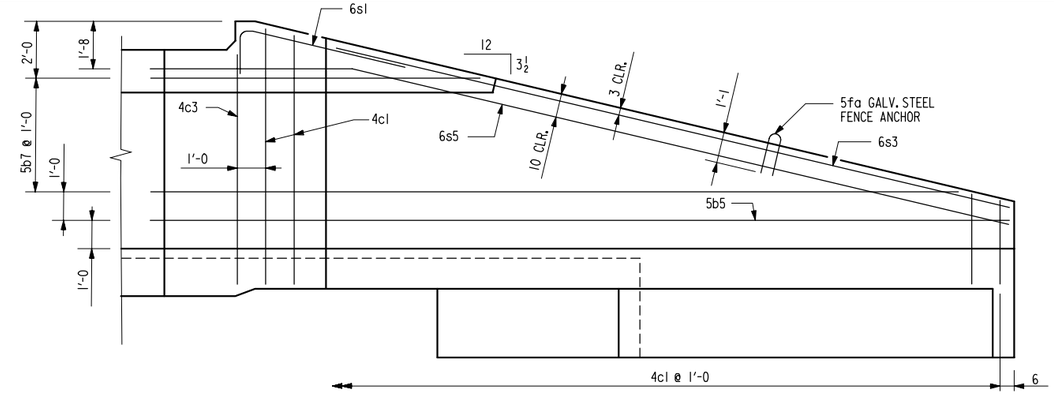

TYPICAL VIEW - FRONT FACE REINFORCING LONG WINGWALL

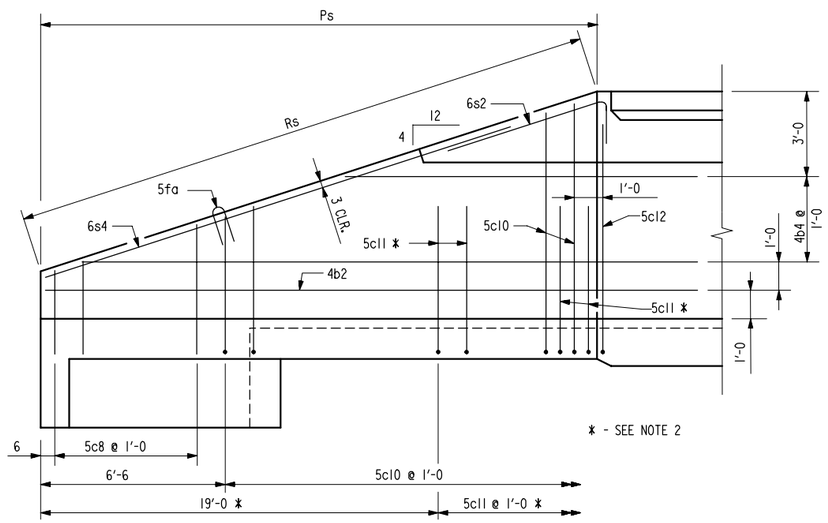

TYPICAL VIEW - BACK FACE REINFORCING SHORT WINGWALL

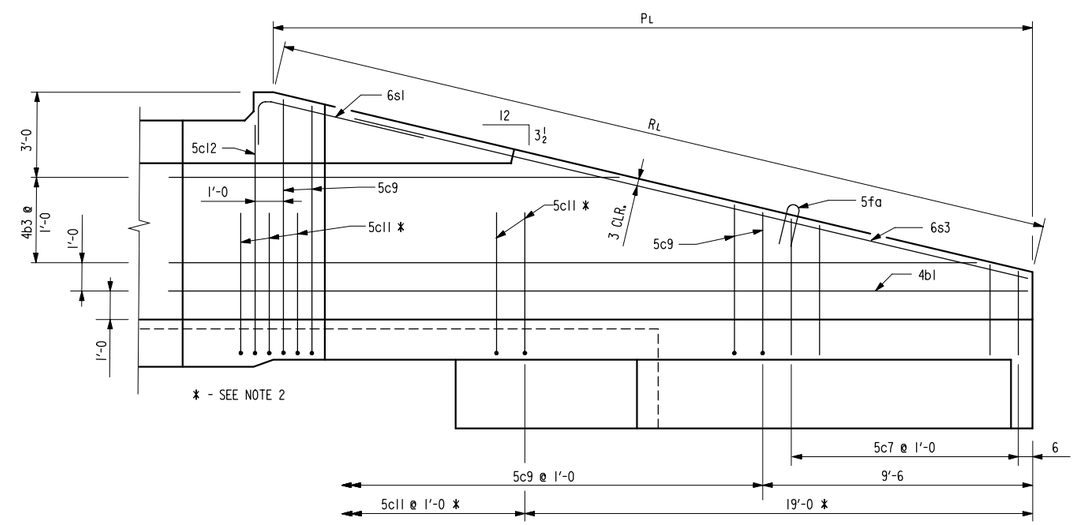

TYPICAL VIEW - BACK FACE REINFORCING LONG WINGWALL

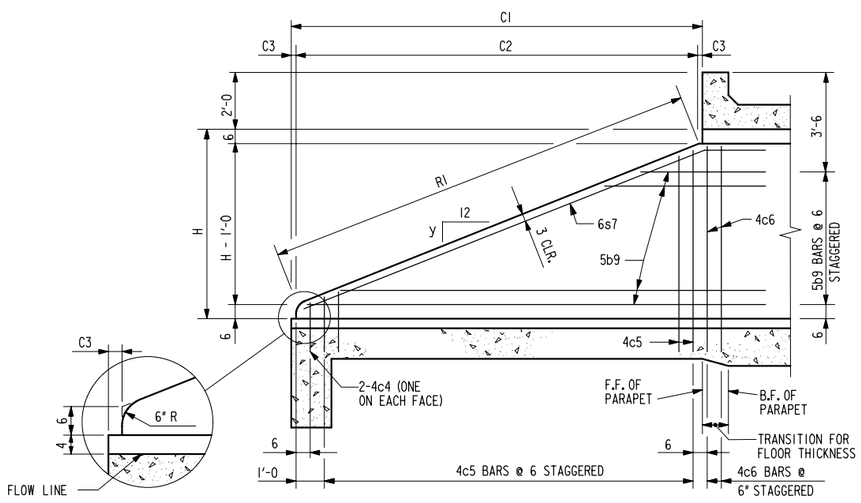

CULVERT HEIGHT (H)	SLOPE y INCHES
6'	$4\frac{5}{8}$
8'	$4\frac{15}{16}$
10'	$5\frac{1}{8}$
12'	$5\frac{1}{4}$

TYPICAL VIEW - CENTER WALL

NOTES :

1. BAR SPACINGS AND POSITIONS SHOWN ARE SIMILAR FOR ALL SIZES OF HEADWALLS IN THIS STANDARD.
2. NOT APPLICABLE TO HEADWALL HEIGHT OF H=6'.
3. FOR DIMENSION TABLE SEE DRAWING TWH 15-1-87.

LATEST REVISION DATE :

APPROVED BY : William A. Lundquist

STANDARD DESIGN

FLARED WING HEADWALLS

FOR

TWIN REINFORCED CONCRETE BOX CULVERTS

IOWA DEPARTMENT OF TRANSPORTATION - HIGHWAY DIVISION

JULY , 1987

TWH 15-4-87

BILL OF REINFORCING FOR ONE HEADWALL 15° SKEW CULVERT SPAN X CULVERT HEIGHT

LOCATION	SHAPE	BAR	12' X 12'			12' X 10'			12' X 8'			12' X 6'			10' X 12'			10' X 10'			10' X 8'			10' X 6'			8' X 10'			8' X 8'			8' X 6'			BAR
			NO.	LENGTH	WT.	NO.	LENGTH	WT.	NO.	LENGTH	WT.	NO.	LENGTH	WT.	NO.	LENGTH	WT.	NO.	LENGTH	WT.	NO.	LENGTH	WT.	NO.	LENGTH	WT.	NO.	LENGTH	WT.	NO.	LENGTH	WT.	NO.	LENGTH	WT.	
FENCE ANCHOR (GALV.)		5fa	2	3'-1	6	2	3'-1	6	2	3'-1	6	2	3'-1	6	2	3'-1	6	2	3'-1	6	2	3'-1	6	2	3'-1	6	2	3'-1	6	2	3'-1	6	2	3'-1	6	5fa
WINGWALL, B.F.H. L		4b1	1	45'-1	31	1	38'-3	26	1	31'-5	21	1	24'-6	16	1	45'-1	31	1	38'-3	26	1	31'-5	21	1	24'-6	16	1	38'-3	26	1	31'-5	21	1	24'-6	16	4b1
WINGWALL, B.F.H. S		4b2	1	39'-10	27	1	33'-10	23	1	27'-10	19	1	21'-10	15	1	39'-10	27	1	33'-10	23	1	27'-10	19	1	21'-10	15	1	33'-10	23	1	27'-10	19	1	21'-10	15	4b2
WINGWALL, B.F.H. L		4b3	10 VAR	12'-8 TO 43'-7	191	8 VAR	12'-8 TO 36'-8	132	6 VAR	12'-8 TO 29'-10	85	4 VAR	12'-8 TO 23'-0	48	10 VAR	12'-8 TO 43'-7	191	8 VAR	12'-8 TO 36'-8	132	6 VAR	12'-8 TO 29'-10	85	4 VAR	12'-8 TO 23'-0	48	8 VAR	12'-8 TO 36'-8	132	6 VAR	12'-8 TO 29'-10	85	4 VAR	12'-8 TO 23'-0	48	4b3
WINGWALL, B.F.H. S		4b4	10 VAR	11'-5 TO 38'-5	166	8 VAR	11'-5 TO 32'-5	117	6 VAR	11'-5 TO 26'-5	76	4 VAR	11'-5 TO 20'-5	43	10 VAR	11'-5 TO 38'-5	166	8 VAR	11'-5 TO 32'-5	117	6 VAR	11'-5 TO 26'-5	76	4 VAR	11'-5 TO 20'-5	43	8 VAR	11'-5 TO 32'-5	117	6 VAR	11'-5 TO 26'-5	76	4 VAR	11'-5 TO 20'-5	43	4b4
WINGWALL, F.F.H. L		5b5	1	45'-1	49	1	38'-3	40	1	31'-5	33	1	24'-6	26	1	45'-1	49	1	38'-3	40	1	31'-5	33	1	24'-6	26	1	38'-3	40	1	31'-5	33	1	24'-6	26	5b5
WINGWALL, F.F.H. S		5b6	1	39'-10	42	1	33'-10	35	1	27'-10	29	1	21'-10	23	1	39'-10	42	1	33'-10	35	1	27'-10	29	1	21'-10	23	1	33'-10	35	1	27'-10	29	1	21'-10	23	5b6
WINGWALL, F.F.H. L		5b7	11 VAR	9'-2 TO 43'-7	307	9 VAR	9'-2 TO 36'-8	215	7 VAR	9'-2 TO 29'-10	142	5 VAR	9'-2 TO 23'-0	84	11 VAR	9'-2 TO 43'-7	307	9 VAR	9'-2 TO 36'-8	215	7 VAR	9'-2 TO 29'-10	142	5 VAR	9'-2 TO 23'-0	84	9 VAR	9'-2 TO 36'-8	215	7 VAR	9'-2 TO 29'-10	142	5 VAR	9'-2 TO 23'-0	84	5b7
WINGWALL, F.F.H. S		5b8	11 VAR	8'-5 TO 38'-5	269	9 VAR	8'-5 TO 32'-5	192	7 VAR	8'-5 TO 26'-5	127	5 VAR	8'-5 TO 20'-5	75	11 VAR	8'-5 TO 38'-5	269	9 VAR	8'-5 TO 32'-5	192	7 VAR	8'-5 TO 26'-5	127	5 VAR	8'-5 TO 20'-5	75	9 VAR	8'-5 TO 32'-5	192	7 VAR	8'-5 TO 26'-5	127	5 VAR	8'-5 TO 20'-5	75	5b8
CENTER WALL, BOTH F.H.		5b9	21 VAR	5'-0 TO 27'-11	360	17 VAR	5'-0 TO 23'-10	256	13 VAR	5'-1 TO 19'-8	168	9 VAR	5'-2 TO 15'-6	97	21 VAR	5'-0 TO 27'-11	360	17 VAR	5'-0 TO 23'-10	256	13 VAR	5'-1 TO 19'-8	168	9 VAR	5'-2 TO 15'-6	97	17 VAR	5'-0 TO 23'-10	256	13 VAR	5'-1 TO 19'-8	168	9 VAR	5'-2 TO 15'-6	97	5b9
WINGWALL, F.F.V. L		4c1	42 VAR	2'-10 TO 14'-10	248	35 VAR	2'-10 TO 12'-9	182	29 VAR	2'-10 TO 10'-9	132	22 VAR	2'-10 TO 8'-8	85	42 VAR	2'-9 TO 14'-9	245	35 VAR	2'-9 TO 12'-8	180	29 VAR	2'-9 TO 10'-8	130	22 VAR	2'-9 TO 8'-7	83	35 VAR	2'-7 TO 12'-6	176	29 VAR	2'-7 TO 10'-6	127	22 VAR	2'-7 TO 8'-5	81	4c1
WINGWALL, F.F.V. S		4c2	37 VAR	2'-11 TO 14'-11	220	31 VAR	2'-11 TO 12'-11	164	25 VAR	2'-11 TO 10'-11	116	19 VAR	2'-11 TO 8'-11	75	37 VAR	2'-10 TO 14'-10	218	31 VAR	2'-10 TO 12'-10	162	25 VAR	2'-10 TO 10'-10	114	19 VAR	2'-10 TO 8'-10	74	31 VAR	2'-8 TO 12'-8	159	25 VAR	2'-8 TO 10'-8	111	19 VAR	2'-8 TO 8'-8	72	4c2
WINGWALL, F.F.V. L		4c3	1	13'-9	9	1	11'-9	8	1	9'-9	7	1	7'-9	5	1	13'-8	9	1	11'-8	8	1	9'-8	6	1	7'-8	5	1	11'-6	8	1	9'-6	6	1	7'-6	5	4c3
WINGWALL, F.F.V. S		4c3	1	13'-9	9	1	11'-9	8	1	9'-9	7	1	7'-9	5	1	13'-8	9	1	11'-8	8	1	9'-8	6	1	7'-8	5	1	11'-6	8	1	9'-6	6	1	7'-6	5	4c3
CENTER WALL, BOTH F.V.		4c4	2	1'-9	2	2	1'-9	2	2	1'-9	2	2	1'-9	2	2	1'-8	2	2	1'-8	2	2	1'-8	2	2	1'-8	2	2	1'-6	2	2	1'-6	2	2	1'-6	2	4c4
CENTER WALL, BOTH F.V.		4c5	49 VAR	2'-0 TO 12'-5	236	41 VAR	2'-0 TO 10'-6	171	33 VAR	2'-0 TO 8'-6	116	24 VAR	2'-0 TO 6'-5	67	49 VAR	1'-11 TO 12'-4	233	41 VAR	1'-11 TO 10'-5	169	33 VAR	1'-11 TO 8'-5	114	24 VAR	1'-11 TO 6'-4	66	41 VAR	1'-9 TO 10'-3	164	33 VAR	1'-9 TO 8'-3	110	24 VAR	1'-9 TO 6'-2	63	4c5
CENTER WALL, BOTH F.V.		4c6	2	12'-7	17	2	10'-7	14	2	8'-7	12	2	6'-7	9	2	12'-6	17	2	10'-6	14	2	8'-6	11	2	6'-6	9	2	10'-4	14	2	8'-4	11	2	6'-4	8	4c6
WINGWALL, B.F.V. L		5c7	9 VAR	2'-10 TO 5'-2	38	9 VAR	2'-10 TO 5'-2	38	9 VAR	2'-10 TO 5'-2	38	9 VAR	2'-10 TO 5'-2	38	9 VAR	2'-9 TO 5'-1	37	9 VAR	2'-9 TO 5'-1	37	9 VAR	2'-9 TO 5'-1	37	9 VAR	2'-9 TO 5'-1	37	9 VAR	2'-7 TO 4'-11	35	9 VAR	2'-7 TO 4'-11	35	9 VAR	2'-7 TO 4'-11	35	5c7
WINGWALL, B.F.V. S		5c8	6 VAR	2'-11 TO 4'-7	23	6 VAR	2'-11 TO 4'-7	23	6 VAR	2'-11 TO 4'-7	23	6 VAR	2'-11 TO 4'-7	23	6 VAR	2'-10 TO 4'-6	23	6 VAR	2'-10 TO 4'-6	23	6 VAR	2'-10 TO 4'-6	23	6 VAR	2'-10 TO 4'-6	23	6 VAR	2'-8 TO 4'-4	22	6 VAR	2'-8 TO 4'-4	22	6 VAR	2'-8 TO 4'-4	22	5c8
WINGWALL, B.F.V. L		5c9	33 VAR	9'-5 TO 18'-10	486	26 VAR	9'-5 TO 16'-9	355	20 VAR	9'-5 TO 14'-9	252	13 VAR	9'-5 TO 12'-8	150	33 VAR	9'-4 TO 18'-9	483	26 VAR	9'-4 TO 16'-8	353	20 VAR	9'-4 TO 14'-8	250	13 VAR	9'-4 TO 12'-7	149	26 VAR	9'-2 TO 16'-6	348	20 VAR	9'-2 TO 14'-6	247	13 VAR	9'-2 TO 12'-5	146	5c9
WINGWALL, B.F.V. S		5c10	31 VAR	8'-11 TO 18'-11	450	25 VAR	8'-11 TO 16'-11	337	19 VAR	8'-11 TO 14'-11	236	13 VAR	8'-11 TO 12'-11	148	31 VAR	8'-10 TO 18'-10	447	25 VAR	8'-10 TO 16'-10	335	19 VAR	8'-10 TO 14'-10	234	13 VAR	8'-10 TO 12'-10	147	25 VAR	8'-8 TO 16'-8	330	19 VAR	8'-8 TO 14'-8	231	13 VAR	8'-8 TO 12'-8	145	5c10
WINGWALL, B.F.V. L		5c11	25	10'-6	274	18	10'-6	197	11	10'-6	120	-	-	-	25	10'-6	274	18	10'-6	197	11	10'-6	120	-	-	-	18	10'-6	197	11	10'-6	120	-	-	-	5c11
WINGWALL, B.F.V. S		5c11	20	10'-6	219	14	10'-6	153	8	10'-6	88	-	-	-	20	10'-6	219	14	10'-6	153	8	10'-6	88	-	-	-	14	10'-6	153	8	10'-6	88	-	-	-	5c11
WINGWALL, B.F.V. L		5c12	1	17'-8	18	1	15'-8	16	1	13'-8	14	1	11'-8	12	1	17'-7	18	1	15'-7	16	1	13'-7	14	1	11'-7	12	1	15'-5	16	1	13'-5	14	1	11'-5	12	5c12
WINGWALL, B.F.V. S		5c12	1	17'-8	18	1	15'-8	16	1	13'-8	14	1	11'-8	12	1	17'-7	18	1	15'-7	16	1	13'-7	14	1	11'-7	12	1	15'-5	16	1	13'-5	14	1	11'-5	12	5c12
APRON, LONGIT.,BOTT.		4d1	17	28'-4	322	17	24'-2	274	17	20'-0	227	17	15'-11	181	15	28'-4	284	13	24'-2	210	13	20'-0	174	13	15'-11	138	11	24'-2	178	11	20'-0	147	11	15'-11	117	4d1
APRON, LONGIT.,BOTT. L		4d2	3	39'-4	79	3	32'-8	65	3	25'-11	52	3	19'-1	38	3	39'-4	79	3	32'-8	65	3	25'-11	52	3	19'-1	38	3	32'-8	65	3	25'-11	52	3	19'-1	38	4d2
APRON, LONGIT.,BOTT. S		4d3	3	34'-11	70	3	29'-0	58	3	23'-1	46	3	17'-2	34	3	34'-11	70	3	29'-0	58	3	23'-1	46	3	17'-2	34	3	29'-0	58	3	23'-1	46	3	17'-2	34	4d3
APRON, LONGIT.,TOP		6f1	24	28'-4	1021	24	24'-2	871	24	20'-0	721	24	15'-11	574	20	28'-4	851	20	24'-2	726	20	20'-0	601	20	15'-11	478	16	24'-2	581	16	20'-0	481	16	15'-11	383	6f1
APRON, LONGIT.,TOP L		6f2	9 VAR	5'-5 TO 25'-8	210	7 VAR	6'-3 TO 21'-5	145	5 VAR	7'-2 TO 17'-4	92	4 VAR	5'-6 TO 13'-2	56	9 VAR	5'-5 TO 25'-8	210	7 VAR	6'-3 TO 21'-5	145	5 VAR	7'-2 TO 17'-4	92	4 VAR	5'-6 TO 13'-2	56	7 VAR	6'-3 TO 21'-5	145	5 VAR	7'-2 TO 17'-4	92	4 VAR	5'-6 TO 13'-2	56	6f2
APRON, LONGIT.,TOP S		6f3	8 VAR	5'-5 TO 25'-8	187	6 VAR	7'-0 TO 21'-7	129	5 VAR	5'-9 TO 17'-5	87	4 VAR	4'-5 TO 13'-3	53	8 VAR	5'-5 TO 25'-8	187	6 VAR	7'-0 TO 21'-7	129	5 VAR	5'-9 TO 17'-5	87	4 VAR	4'-5 TO 13'-3	53	6 VAR	7'-0 TO 21'-7	129	5 VAR	5'-9 TO 17'-5	87	4 VAR	4'-5 TO 13'-3	53	6f3
APRON, LONGIT.,TOP L		6f4	1	45'-1	71	1	38'-3	57	1	31'-5	47	1	24'-6	37	1	45'-1	71	1	38'-3	57	1	31'-5	47	1	24'-6	37	1	38'-3	57	1	31'-5	47	1	24'-6	37	6f4
APRON, LONGIT.,TOP S		6f5	1	39'-10	60	1	33'-10	51	1	27'-10	42	1	21'-10	33	1	39'-10	60	1	33'-10	51	1	27'-10	42	1	21'-10	33	1	33'-10	51	1	27'-10	42	1	21'-10	33	6f5
PARAPET, VERTICAL		4i1	51	6'-2	210	49	6'-2	202	49	6'-2	202	49	6'-2	202	43	6'-2	178	41	6'-2	169	41	6'-2	169	41	6'-2	169	33	6'-2	136	33	6'-2	136	33	6'-2	136	4i1
PARAPET, HORIZONTAL		7j1	4	26'-2	214	4	26'-0	213	4	26'-0	213	4	25'-11	212	4	22'-0	180	4	21'-10	179	4	21'-10	179	4	21'-9	178	4	17'-9	145	4	17'-9	145	4	17'-8	144	7j1
APRON,TRANS.,TOP		6m1	6 VAR	28'-0 TO 29'-0	257	6 VAR	27'-6 TO 28'-6	252	6 VAR	27'-6 TO 28'-6	252	6 VAR	27'-3 TO 28'-3	250	5 VAR	23'-10 TO 24'-8	182	5 VAR	23'-4 TO 24'-2	178	5 VAR	23'-4 TO 24'-2	178	5 VAR	23'-2 TO 23'-11	177	4 VAR	19'-2 TO 19'-10	117	4 VAR	19'-2 TO 19'-10	117	4 VAR	18'-11 TO 19'-7	116	6m1
APRON,TRANS.,TOP		6m2	25 VAR	29'-2 TO 38'-1	1263	20 VAR	28'-8 TO 35'-8	966	14 VAR	28'-8 TO 33'-5	653	9 VAR	28'-5 TO 31'-4	404	27 VAR	24'-10 TO 34'-6	1203	21 VAR	24'-4 TO 31'-8	883	16 VAR	24'-4 TO 29'-10	651	10 VAR	24'-1 TO 27'-4	386	23 VAR	20'-0 TO 28'-1	831	18 VAR	20'-0 TO 26'-2	624	12 VAR	19'-9 TO 23'-8	391	6m2
APRON,TRANS.,TOP		6m3	5 VAR	18'-9 TO 29'-2	180	4 VAR	17'-9 TO 26'-3	132	5 VAR	16'-0 TO 26'-5	159	4 VAR	15'-7 TO 23'-11	119	4 VAR	16'-7 TO 24'-5	123	4 VAR	16'-6 TO 24'-4	123	4 VAR	14'-2 TO 22'-0	109	4 VAR	14'-3 TO 22'-1	109	3 VAR	14'-0 TO 19'-11	76	3 VAR	12'-3 TO 17'-6	67	3 VAR	12'-4 TO 17'-7	67	6m3
APRON,TRANS.,TOP		6m4	3	18'-2	82	3	17'-2	77	3	16'-0	72	3	14'-11	67	2	16'-4	49	2	15'-3	46	2	14'-1	42	2	13'-1	39	2	13'-3	40	2	12'-5	37	2	11'-1	33	6m4
APRON,TRANS.,BOTT.		6m5	24 VAR	21'-6 TO 33'-10	997	20 VAR	21'-3 TO 31'-6	792	16 VAR	21'-3 TO 29'-4	608	12 VAR	21'-2 TO 27'-2	436	24 VAR	17'-4 TO 29'-8	847	20 VAR	17'-2 TO 27'-5	670	16 VAR	17'-2 TO 25'-3	510	12 VAR	17'-1 TO 23'-0	361	20 VAR	13'-0 TO 23'-3	544	16 VAR	13'-0 TO 21'-1	410	12 VAR	12'-11 TO 18'-10	286	6m5
CURTAIN, HORIZONTAL		6p1	4	26'-5	159	4	26'-2	157	4	26'-2	158	4	26'-1	157	4	22'-3	134	4	22'-1	133	4	22'-1	133	4	21'-11	132	4	17'-11	108	4	17'-11	108	4	17'-10	107	6p1
CURTAIN, HORIZONTAL L		6p2	4	21'-9	131	4	18'-9	113	4	15'-9	95	4	12'-9	77	4	21'-9	131	4	18'-9	113	4	15'-9	95	4	12'-9	77	4	18'-9	113	4	15'-9	95	4	12'-9	77	6p2
CURTAIN, HORIZONTAL S		6p3	4	16'-10	101	4	14'-7	88	4	12'-5	75	4	10'-2	61	4	16'-10	101	4	14'-7	88	4	12'-5	75	4	10'-2	61	4	14'-7	88	4	12'-5	75	4	10'-2	61	6p3
WING SLOPE, BOTH F. L		6s1	2	6'-11	21	2	6'-11	21	2	6'-11	21	2	6'-11	21	2	6'-11	21	2	6'-11	21	2	6'-11	21	2	6'-11	21	2	6'-11	21	2	6'-11	21	2	6'-11	21	6s1
WING SLOPE, BOTH F. S		6s2	2	6'-6	20	2	6'-6	20	2	6'-6	20	2	6'-6	20	2	6'-6	20	2	6'-6	20	2	6'-6	20	2	6'-6	20	2	6'-6	20	2	6'-6	20	2	6'-6	20	6s2
WING SLOPE, BOTH F. L		6s3	2	41'-9	131	2	34'-7	104	2	27'-6	83	2	20'-4	61	2	41'-9	131	2	34'-7	104	2	27'-6	83	2	20'-4	61	2	34'-7	104	2	27'-6	83	2	20'-4	61	6s3
WING SLOPE, BOTH F. S		6s4	2	37'-4	112	2	31'-0	93	2	24'-8	74	2	18'-4	55	2	37'-4	112	2	31'-0	93	2	24'-8	74	2	18'-4	55	2	31'-0	93	2	24'-8	74	2	18'-4	55	6s4
WING SLOPE, F.F L		6s5	1	46'-1	72	1	38'-11	58	1	31'-9	48	1	24'-7	37	1	46'-1	72	1	38'-11	58	1	31'-9	48	1	24'-7	37	1	38'-11	58	1	31'-9	48	1	24'-7	37	6s5
WING SLOPE, F.F S		6s6	1	41'-3	65	1	34'-11	52	1	28'-8	43	1	22'-4	34	1	41'-3	65	1	34'-11	52	1	28'-8	43	1	22'-4	34	1	34'-11	52	1	28'-8	43	1	22'-4	34	6s6
CENTER WALL, BOTH F.H.		6s7	2	30'-6	92	2	25'-11	78	2	21'-4	64	2	16'-9	50	2	30'-6	92	2	25'-11	78	2	21'-4	64	2	16'-9	50	2	25'-11	78	2	21'-4	64	2	16'-9	50	6s7
CURTAIN, VERT.		5t1	42	7'-11	347	38	7'-5	294	35	6'-11	252	30	6'-5	201	38	7'-11	314	34	7'-5	263	31	6'-11	224	26	6'-5	174	30	7'-5	232	27	6'-11	195	22	6'-5	147	5t1
ESTIMATED QUANTITIES ONE HEADWALL	REINF. STEEL		10,189 lbs.			8088 lbs.			6289 lbs.			4534 lbs.			9467 lbs.			7427 lbs.			5728 lbs.			4065 lbs.			6810 lbs.			5206 lbs.			3635 lbs.		
	CONCRETE	PARAPET △	2.9	92.2 cu. yd.		2.7	67.6 cu. yd.		2.7	51.2 cu. yd.		2.6	35.7 cu. yd.		2.6	84.0 cu. yd.		2.4	60.8 cu. yd.		2.4	45.7 cu. yd.		2.3	31.4 cu. yd.		2.1	52.7 cu. yd.		2.1	39.2 cu. yd.		2.0	26.5 cu. yd.	
		WINGWALLS	29.4			17.7			12.0			6.6			29.4			17.7			12.0			6.6			17.7			12.0			6.6		
		FOOTINGS	59.9			47.2			36.5			26.5			52.0			40.7			31.3			22.5			32.9			25.1			17.9		

BENT BAR DETAILS

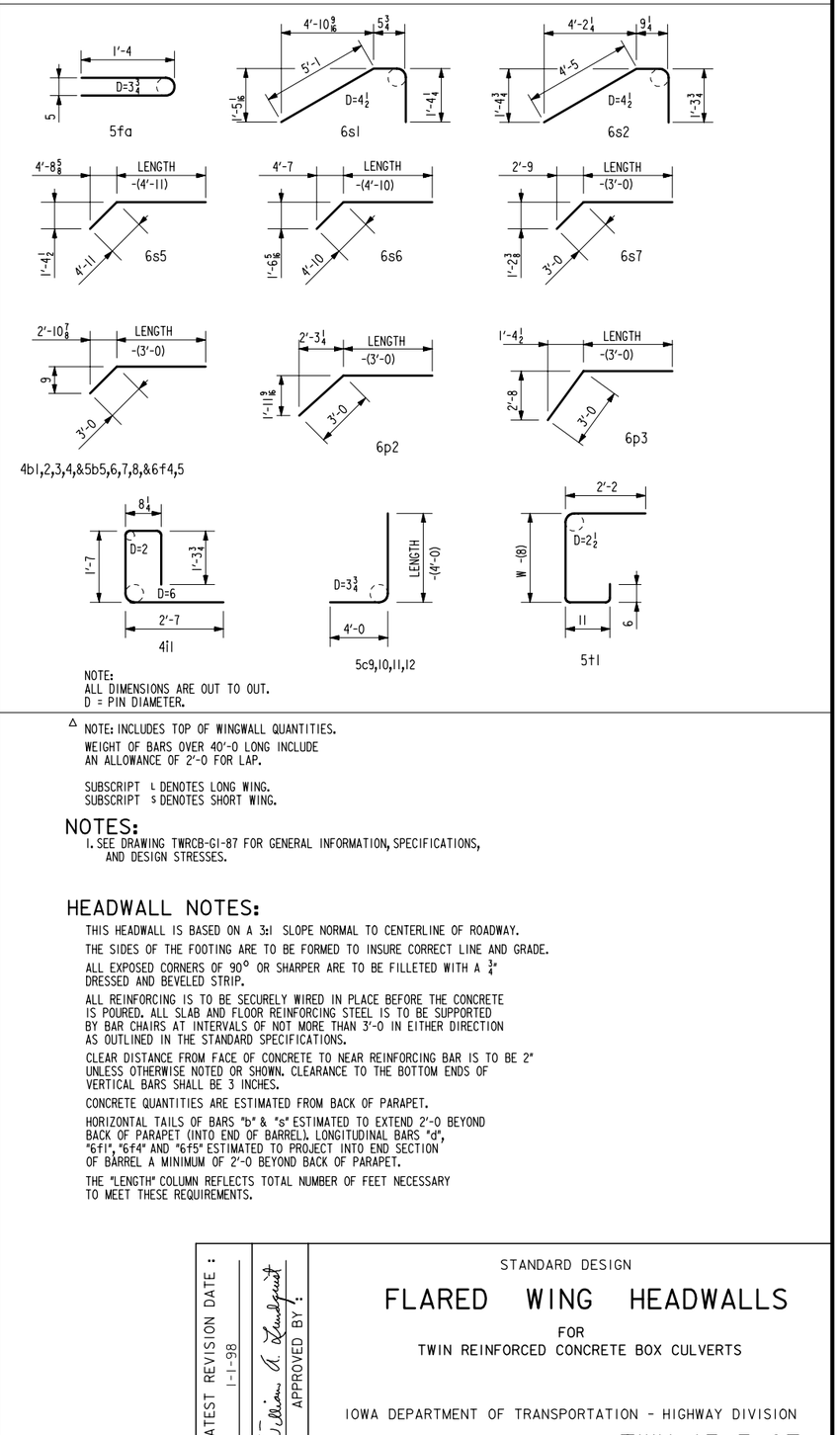

NOTE:
ALL DIMENSIONS ARE OUT TO OUT.
D = PIN DIAMETER.

△ NOTE: INCLUDES TOP OF WINGWALL QUANTITIES.
WEIGHT OF BARS OVER 40'-0 LONG INCLUDE AN ALLOWANCE OF 2'-0 FOR LAP.

SUBSCRIPT L DENOTES LONG WING.
SUBSCRIPT S DENOTES SHORT WING.

NOTES:

1. SEE DRAWING TWRCB-G1-87 FOR GENERAL INFORMATION, SPECIFICATIONS, AND DESIGN STRESSES.

HEADWALL NOTES:

THIS HEADWALL IS BASED ON A 3:1 SLOPE NORMAL TO CENTERLINE OF ROADWAY.

THE SIDES OF THE FOOTING ARE TO BE FORMED TO INSURE CORRECT LINE AND GRADE.

ALL EXPOSED CORNERS OF 90° OR SHARPER ARE TO BE FILLETED WITH A 3/4" DRESSED AND BEVELED STRIP.

ALL REINFORCING IS TO BE SECURELY WIRED IN PLACE BEFORE THE CONCRETE IS POURED. ALL SLAB AND FLOOR REINFORCING STEEL IS TO BE SUPPORTED BY BAR CHAIRS AT INTERVALS OF NOT MORE THAN 3'-0 IN EITHER DIRECTION AS OUTLINED IN THE STANDARD SPECIFICATIONS.

CLEAR DISTANCE FROM FACE OF CONCRETE TO NEAR REINFORCING BAR IS TO BE 2" UNLESS OTHERWISE NOTED OR SHOWN. CLEARANCE TO THE BOTTOM ENDS OF VERTICAL BARS SHALL BE 3 INCHES.

CONCRETE QUANTITIES ARE ESTIMATED FROM BACK OF PARAPET.

HORIZONTAL TAILS OF BARS "b" & "s" ESTIMATED TO EXTEND 2'-0 BEYOND BACK OF PARAPET (INTO END OF BARREL). LONGITUDINAL BARS "d", "6f1", "6f4" AND "6f5" ESTIMATED TO PROJECT INTO END SECTION OF BARREL A MINIMUM OF 2'-0 BEYOND BACK OF PARAPET.

THE "LENGTH" COLUMN REFLECTS TOTAL NUMBER OF FEET NECESSARY TO MEET THESE REQUIREMENTS.

LATEST REVISION DATE : 1-1-98

APPROVED BY : William A. Lundquist

STANDARD DESIGN

FLARED WING HEADWALLS

FOR
TWIN REINFORCED CONCRETE BOX CULVERTS

IOWA DEPARTMENT OF TRANSPORTATION - HIGHWAY DIVISION

JULY , 1987

TWH 15-5-87

REVISED 1/98; BEND DIMENSIONS OF 4i1 BAR CHANGED.
TWH 15-5-87

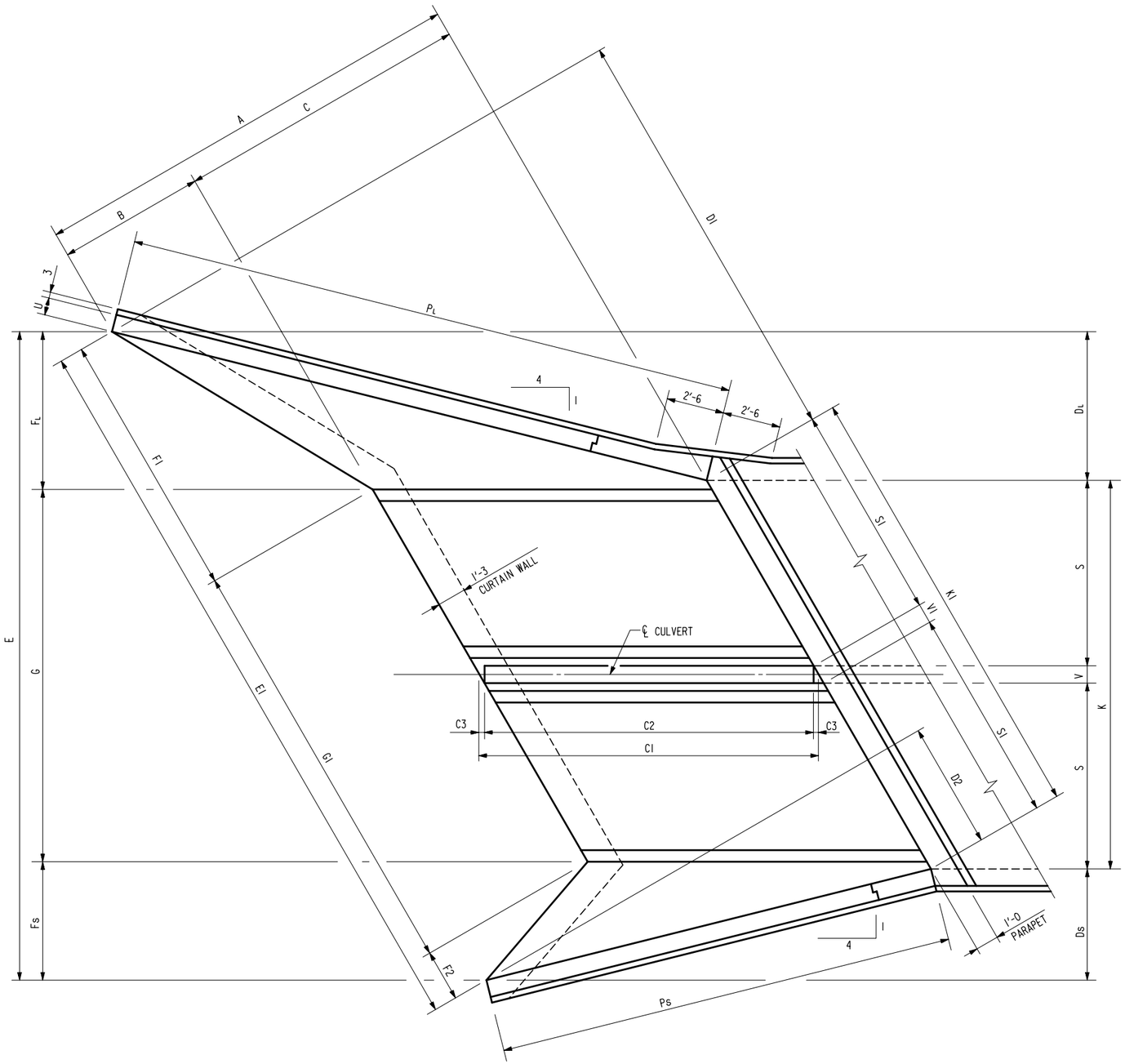

PLAN VIEW

DIMENSION TABLE

S X H	12' X 12'	12' X 10'	12' X 8'	12' X 6'	10' X 12'	10' X 10'	10' X 8'	10' X 6'	8' X 10'	8' X 8'	8' X 6'	S X H
A	37'-0	31'-0	25'-0	19'-0	37'-0	31'-0	25'-0	19'-0	31'-0	25'-0	19'-0	A
B	12'-4	10'-4	8'-4	6'-4	12'-4	10'-4	8'-4	6'-4	10'-4	8'-4	6'-4	B
C	24'-8	20'-8	16'-8	12'-8	24'-8	20'-8	16'-8	12'-8	20'-8	16'-8	12'-8	C
C1	28'-5 3/4	23'-10 3/8	19'-3	14'-7 1/2	28'-5 3/4	23'-10 3/8	19'-3	14'-7 1/2	23'-10 3/8	19'-3	14'-7 1/2	C1
C2	27'-10 1/8	23'-4 5/8	18'-9 1/8	14'-2 3/8	27'-10 1/8	23'-4 5/8	18'-9 1/8	14'-2 3/8	23'-4 3/8	18'-9 1/8	14'-2 3/8	C2
C3	3 1/2"	2 7/8"	2 7/8"	2 5/8"	3 1/2"	2 7/8"	2 7/8"	2 5/8"	2 7/8"	2 7/8"	2 5/8"	C3
DL	12'-5 3/4	10'-5 1/2	8'-5 1/4	6'-4 7/8	12'-5 3/4	10'-5 1/2	8'-5 1/4	6'-4 7/8	10'-5 1/2	8'-5 1/4	6'-4 7/8	DL
Ds	9'-4	7'-9 7/8	6'-3 5/8	4'-9 1/2	9'-4	7'-9 7/8	6'-3 5/8	4'-9 1/2	7'-9 7/8	6'-3 5/8	4'-9 1/2	Ds
D1	35'-9 3/8	29'-11 3/4	24'-2 1/8	18'-4 1/2	35'-9 3/8	29'-11 3/4	24'-2 1/8	18'-4 1/2	29'-11 3/4	24'-2 1/8	18'-4 1/2	D1
D2	10'-7	8'-10 3/8	7'-1 7/8	5'-5 1/4	10'-7	8'-10 3/8	7'-1 7/8	5'-5 1/4	8'-10 3/8	7'-1 7/8	5'-5 1/4	D2
E	46'-9 3/4	43'-1 3/8	39'-6 7/8	35'-11 1/2	42'-9 3/4	39'-1 3/8	35'-6 7/8	31'-11 1/2	35'-1 3/8	31'-6 7/8	27'-11 1/2	E
E1	54'-0 3/4	49'-9 3/8	45'-8 3/8	41'-6 1/8	49'-5 1/4	45'-2	41'-0 1/8	36'-10 3/4	40'-6 1/2	36'-5 1/2	32'-3 3/8	E1
FL	12'-9 1/2	10'-9 1/2	8'-9 1/4	6'-8 1/8	12'-9 3/4	10'-9 1/2	8'-9 1/4	6'-8 1/8	10'-9 1/2	8'-9 1/4	6'-8 1/8	FL
Fs	9'-8	8'-1 7/8	6'-7 5/8	5'-1 1/2	9'-8	8'-1 7/8	6'-7 5/8	5'-1 1/2	8'-1 7/8	6'-7 5/8	5'-1 1/2	Fs
F1	21'-11	18'-5 1/8	14'-11 1/4	11'-5 3/8	21'-11	18'-5 1/8	14'-11 1/4	11'-5 3/8	18'-5 1/8	14'-11 1/4	11'-5 3/8	F1
F2	4'-0 1/2	3'-5 3/8	2'-10 1/4	2'-3 1/8	4'-0 1/2	3'-5 3/8	2'-10 1/4	2'-3 1/8	3'-5 3/8	2'-10 1/4	2'-3 1/8	F2
G	24'-4	24'-2	24'-2	24'-1	20'-4	20'-2	20'-2	20'-1	16'-2	16'-2	16'-1	G
G1	28'-1 1/8	27'-10 7/8	27'-10 7/8	27'-9 3/4	23'-5 3/4	23'-3 1/2	23'-3 1/2	23'-2 1/4	18'-8	18'-8	18'-6 7/8	G1
G2	29'-4	29'-1 5/8	29'-1 1/2	29'-0 1/8	24'-8 1/2	24'-6 1/8	24'-6	24'-4 3/4	19'-10 3/4	19'-10 5/8	19'-9 1/4	G2
G3	25'-1 7/8	21'-1 1/2	17'-1 1/4	13'-1	25'-1 7/8	21'-1 1/2	17'-1 1/4	13'-1	21'-1 1/2	17'-1 1/4	13'-1	G3
G4	25'-7 7/8	21'-0 5/8	17'-0 3/8	12'-8 3/4	25'-7 7/8	21'-0 5/8	17'-0 3/8	12'-8 3/4	21'-0 5/8	17'-0 3/8	12'-8 3/4	G4
G5	12'-11 3/4	10'-10 3/4	8'-9 3/4	6'-8 3/4	12'-11 3/4	10'-10 3/4	8'-9 3/4	6'-8 3/4	10'-10 3/4	8'-9 3/4	6'-8 3/4	G5
G6	14'-3 1/4	11'-10 5/8	9'-9 5/8	7'-7	14'-3 1/4	11'-10 5/8	9'-9 5/8	7'-7	11'-10 5/8	9'-9 5/8	7'-7	G6
G7	2 1/4"	8 3/4"	8 3/8"	1'-0	2 1/4"	8 7/8"	8 7/8"	1'-0	8 7/8"	8 7/8"	1'-0	G7
G8	4 5/8"	7 5/8"	7 5/8"	9"	4 5/8"	7 5/8"	7 5/8"	9"	7 5/8"	7 5/8"	9"	G8
K	25'-0	24'-10	24'-10	24'-9	21'-0	20'-10	20'-10	20'-9	16'-10	16'-10	16'-9	K
K1	28'-10 3/8	28'-8 1/8	28'-8 1/8	28'-7	24'-3	24'-0 5/8	24'-0 5/8	23'-11 1/2	19'-5 1/4	19'-5 1/4	19'-4 1/8	K1
PL	51'-5 5/8	43'-1 1/2	34'-9 1/4	26'-5 1/8	51'-5 5/8	43'-1 1/2	34'-9 1/4	26'-5 1/8	43'-1 1/2	34'-9 1/4	26'-5 1/8	PL
Ps	38'-5 3/4	32'-2 7/8	26'-0	19'-9 1/8	38'-5 3/4	32'-2 7/8	26'-0	19'-9 1/8	32'-2 7/8	26'-0	19'-9 1/8	Ps
RL	52'-11 1/8	44'-4 1/8	35'-9 1/8	27'-2 1/8	52'-11 1/8	44'-4 1/8	35'-9 1/8	27'-2 1/8	44'-4 1/8	35'-9 1/8	27'-2 1/8	RL
Rs	40'-5	33'-10 1/4	27'-3 5/8	20'-9	40'-5	33'-10 1/4	27'-3 5/8	20'-9	33'-10 1/4	27'-3 5/8	20'-9	Rs
R1	30'-0	25'-0 5/8	20'-0 3/8	15'-0 5/8	30'-0	25'-0 5/8	20'-0 3/8	15'-0 5/8	25'-0 5/8	20'-0 3/8	15'-0 5/8	R1
S1	13'-10 1/4	13'-10 1/4	13'-10 1/4	13'-10 1/4	11'-6 5/8	11'-6 5/8	11'-6 5/8	11'-6 5/8	9'-2 1/8	9'-2 1/8	9'-2 1/8	S1
T	1'-2	1'-2	1'-2	1'-2	1'-1	1'-1	1'-1	1'-1	11"	11"	11"	T
U	1'-0	10"	10"	9"	1'-0	10"	10"	9"	10"	10"	9"	U
V	1'-0	10"	10"	9"	1'-0	10"	10"	9"	10"	10"	9"	V
V1	1'-1 7/8"	11 1/2"	11 1/2"	10 3/8"	1'-1 7/8"	11 1/2"	11 1/2"	10 3/8"	11 1/2"	11 1/2"	10 3/8"	V1
W	5'-0	4'-6	4'-0	3'-6	5'-0	4'-6	4'-0	3'-6	4'-6	4'-0	3'-6	W

NOTES:

1. SEE DRAWING TWRCB-G1-87 FOR GENERAL INFORMATION, SPECIFICATIONS, AND DESIGN STRESSES.
2. SEE DRAWING TWH 30-2-87 THRU 30-4-87 FOR LOCATION OF CERTAIN DIMENSIONS TABULATED.
3. SEE DRAWING TWH 30-5-87 FOR HEADWALL NOTES.

LATEST REVISION DATE : 12-5-96

William A. Knudsen
APPROVED BY :

STANDARD DESIGN

FLARED WING HEADWALLS

FOR
TWIN REINFORCED CONCRETE BOX CULVERTS

IOWA DEPARTMENT OF TRANSPORTATION - HIGHWAY DIVISION

JULY , 1987

TWH 30-1-87

REVISED : 12/96 ; NOTE CORRECTED.
TWH 30-1-87

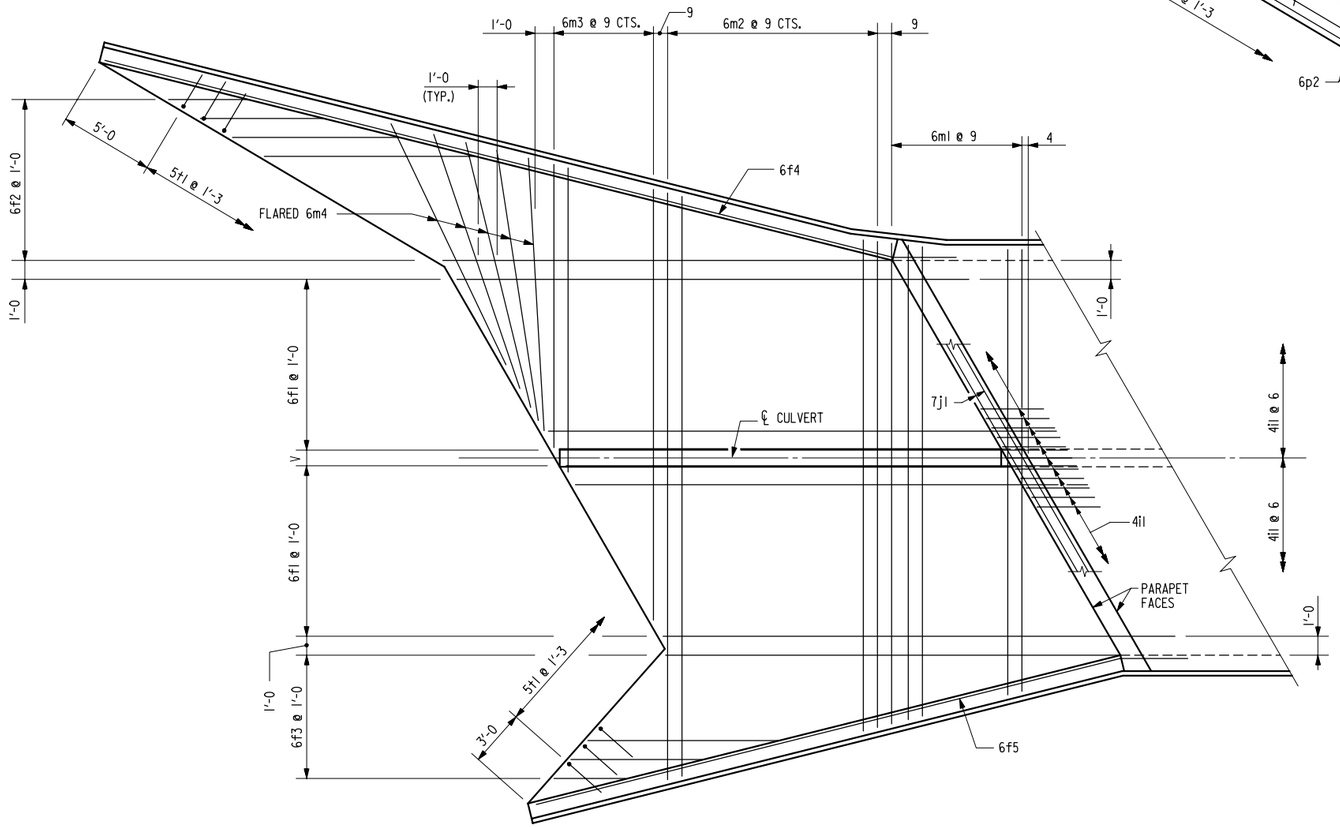

PLAN VIEW - TOP OF APRON REINFORCING BARS

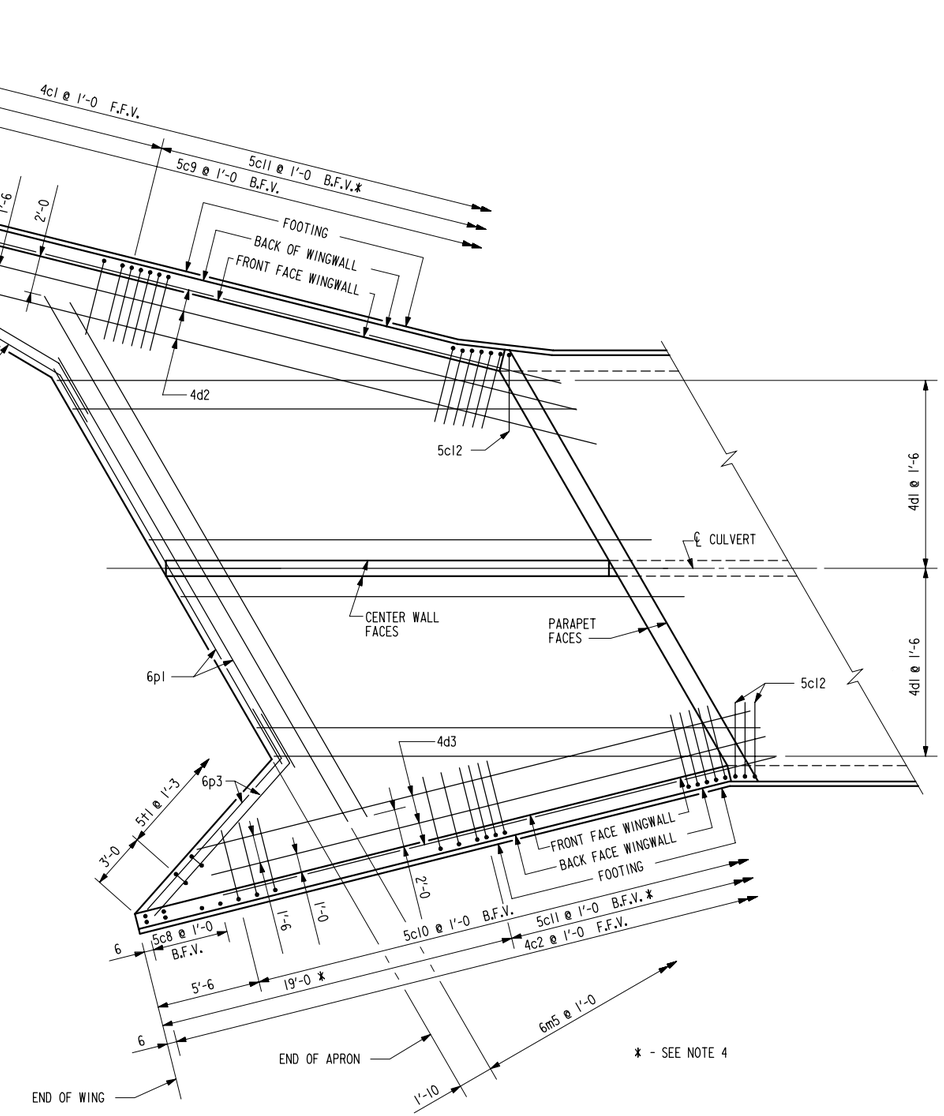

PLAN VIEW - BOTTOM OF APRON REINFORCING BARS

NOTES :

1. BAR SPACINGS AND POSITIONS SHOWN ARE SIMILAR FOR ALL SIZES OF HEADWALLS IN THIS STANDARD.
2. WINGWALL BARS CONSISTENTLY REFERENCED FROM END OF WING FOR ALL HEADWALLS.
3. TOP TRANSVERSE FLOOR BARS ARE REFERENCED APPROXIMATELY 4" FROM THE BACK OF THE PARAPET FOR ALL HEADWALLS.
4. THERE ARE NO 5c11 BARS IN THE 6' HEIGHT HEADWALL.
5. FOR DIMENSION TABLE SEE DRAWING TWH 30-1-87.
6. FOR REINFORCING IN CURTAIN WALL SEE CURTAIN WALL DETAILS ON DRAWING TWH 30-3-87.

LATEST REVISION DATE :

APPROVED BY : William A. Lundquist

STANDARD DESIGN

FLARED WING HEADWALLS

FOR

TWIN REINFORCED CONCRETE BOX CULVERTS

IOWA DEPARTMENT OF TRANSPORTATION - HIGHWAY DIVISION

JULY , 1987

TWH 30-2-87

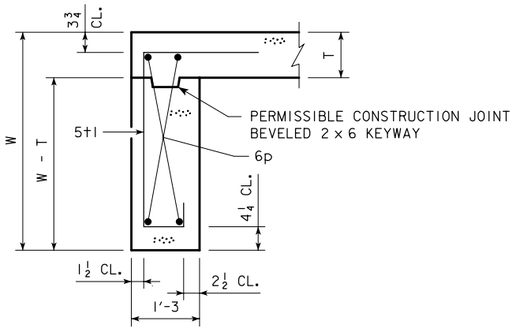

SECTION THRU CURTAIN WALL

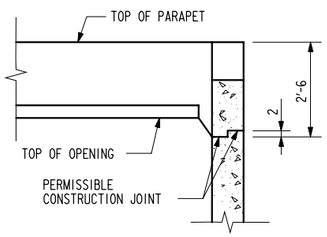

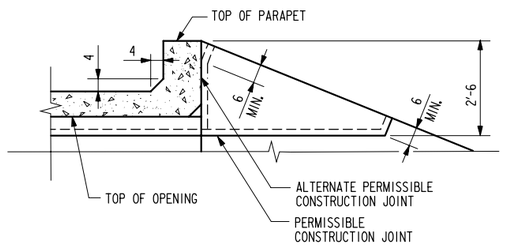

TOP OF WINGWALL DETAILS

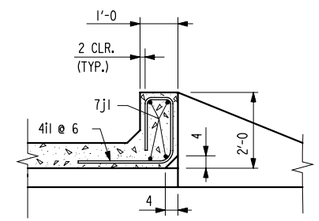

SECTION THRU PARAPET

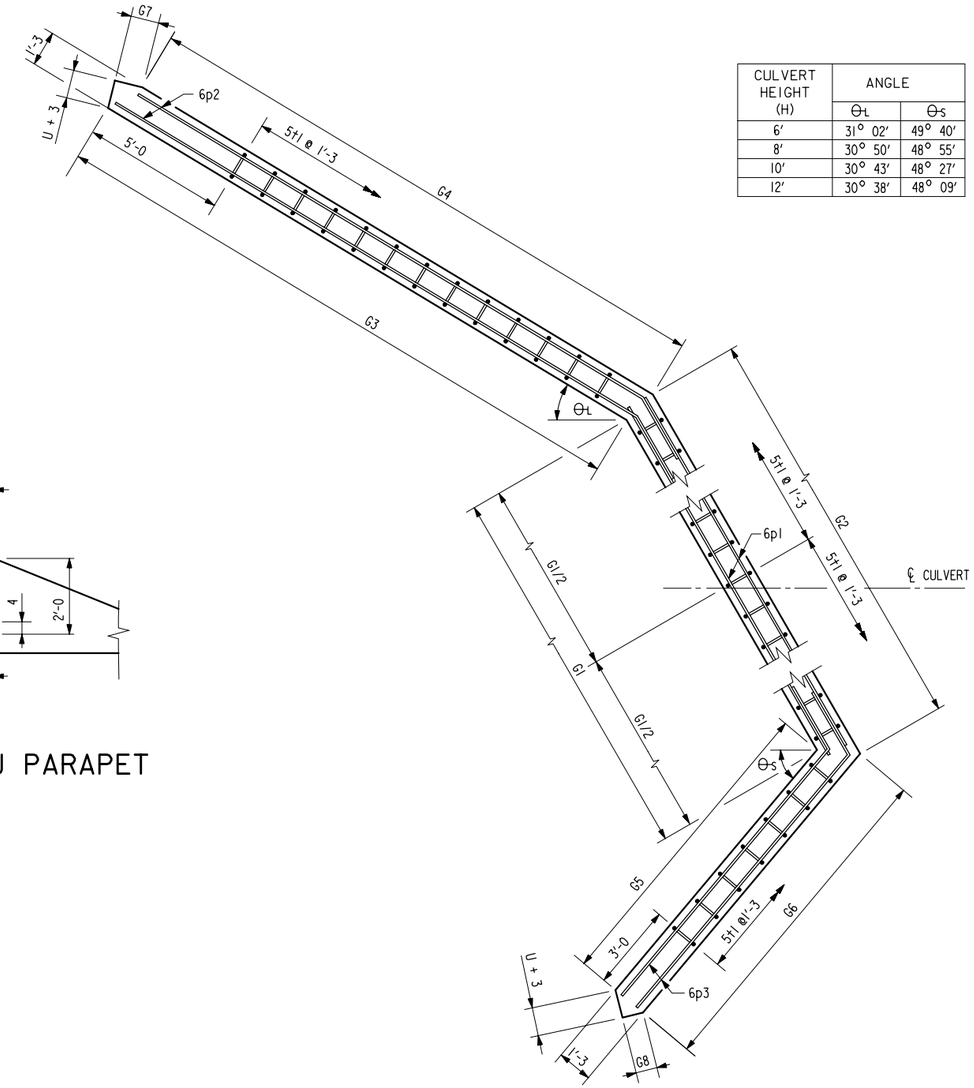

CULVERT HEIGHT (H)	ANGLE	
	θL	θS
6'	31° 02'	49° 40'
8'	30° 50'	48° 55'
10'	30° 43'	48° 27'
12'	30° 38'	48° 09'

CURTAIN WALL DETAIL

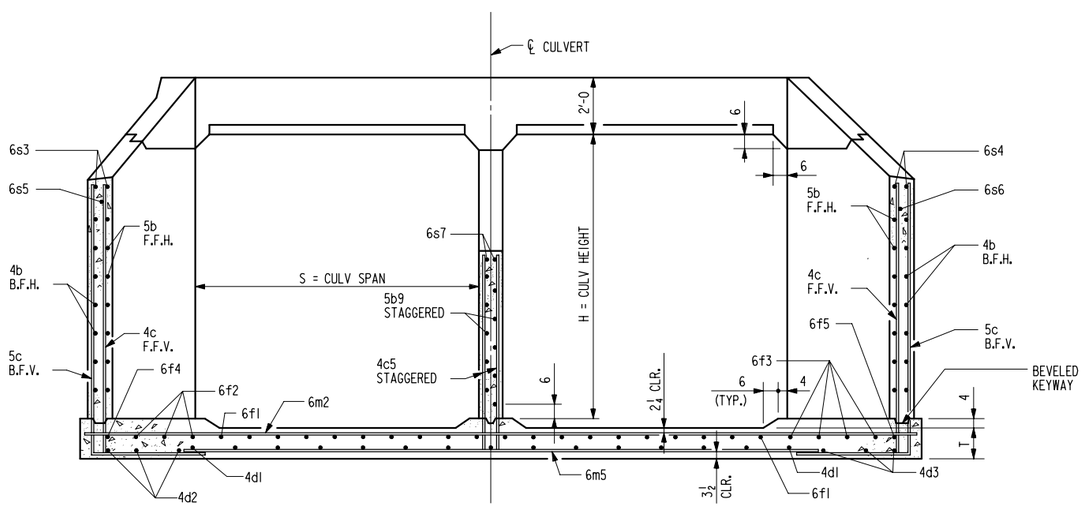

TYPICAL SECTION - NEAR CENTER OF APRON

NOTES:

1. SEE DRAWING TWRCB-G1-87 FOR GENERAL INFORMATION, SPECIFICATIONS, AND DESIGN STRESSES.
2. FOR DIMENSION TABLE SEE DRAWING TWH 30-1-87.

LATEST REVISION DATE : 04-07

APPROVED BY :

STANDARD DESIGN

FLARED WING HEADWALLS

FOR
TWIN REINFORCED CONCRETE BOX CULVERTS

IOWA DEPARTMENT OF TRANSPORTATION - HIGHWAY DIVISION

JULY , 1987

TWH 30-3-87

REVISION - 04-07 - ADDED PERMISSIBLE CONSTRUCTION JOINT IN CURTAIN WALL.
TWH 30-3-87

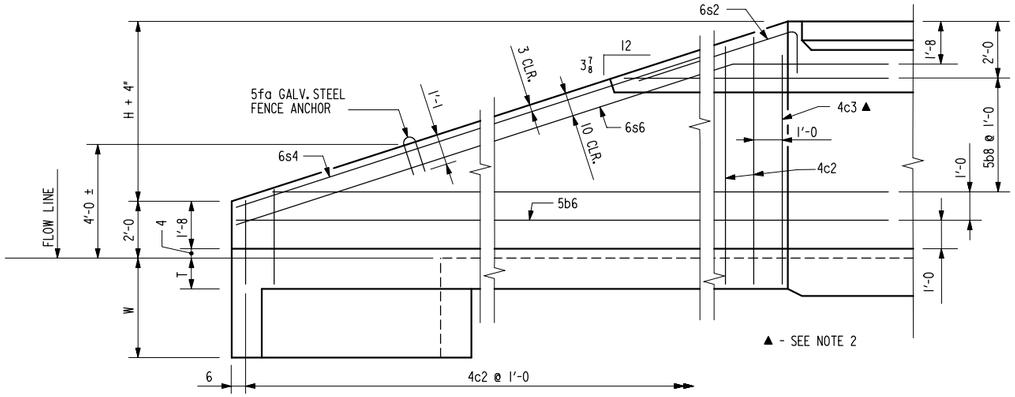

TYPICAL VIEW - FRONT FACE REINFORCING SHORT WINGWALL

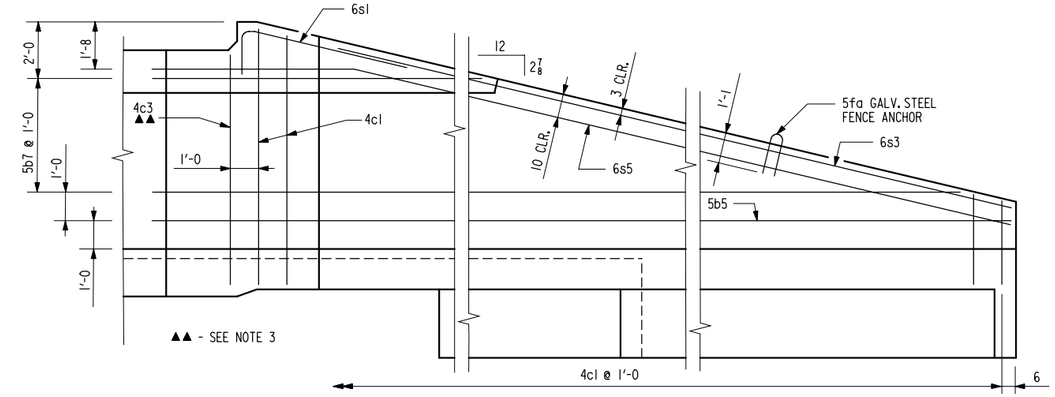

TYPICAL VIEW - FRONT FACE REINFORCING LONG WINGWALL

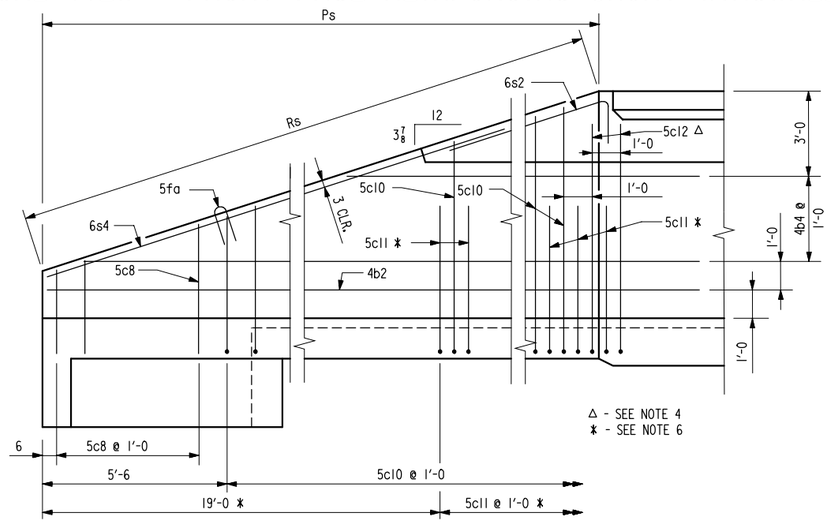

TYPICAL VIEW - BACK FACE REINFORCING SHORT WINGWALL

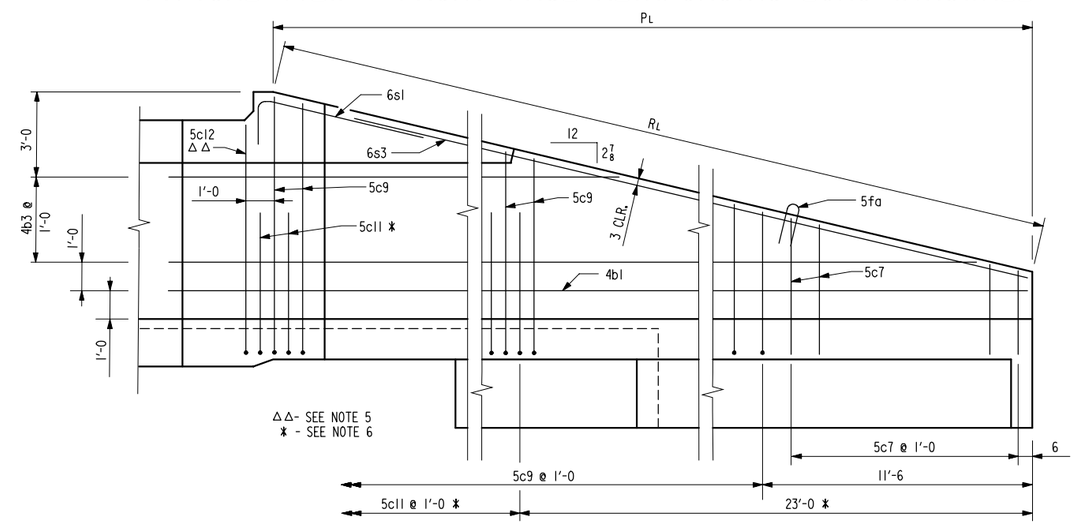

TYPICAL VIEW - BACK FACE REINFORCING LONG WINGWALL

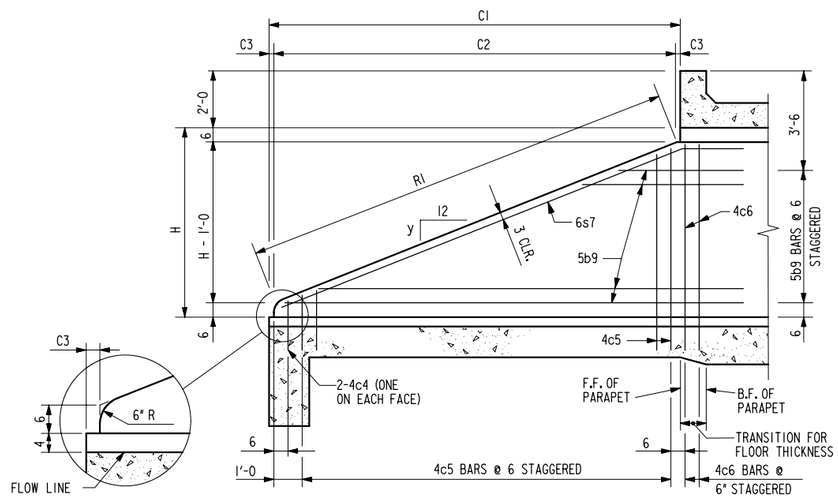

TYPICAL VIEW - CENTER WALL

CULVERT HEIGHT (H)	SLOPE y INCHES
6'	$4\frac{1}{4}$
8'	$4\frac{1}{2}$
10'	$4\frac{5}{8}$
12'	$4\frac{3}{4}$

NOTES :

1. BAR SPACINGS AND POSITIONS SHOWN ARE SIMILAR FOR ALL SIZES OF HEADWALLS IN THIS STANDARD.
2. ONE 4c3 BAR, HEADWALL HEIGHTS OF H=6', H=8' AND TWO 4c3 BARS, HEADWALL HEIGHTS OF H=10' AND H=12'.
3. ONE 4c3 BAR, HEADWALL HEIGHT OF H=8' AND TWO 4c3 BARS, HEADWALL HEIGHTS OF H=6', H=10' AND H=12'.
4. ONE 5c12 BAR, HEADWALL HEIGHTS OF H=6', H=8' AND TWO 5c12 BARS, HEADWALL HEIGHTS OF H=10' AND H=12'.
5. ONE 5c12 BAR, HEADWALL HEIGHT OF H=8' AND TWO 5c12 BARS, HEADWALL HEIGHTS OF H=6', H=10' AND H=12'.
6. NOT APPLICABLE TO HEADWALL HEIGHT OF H=6'.
7. FOR DIMENSION TABLE SEE DRAWING TWH 30-1-87.

LATEST REVISION DATE :

APPROVED BY : William A. Lundquist

STANDARD DESIGN

FLARED WING HEADWALLS

FOR

TWIN REINFORCED CONCRETE BOX CULVERTS

IOWA DEPARTMENT OF TRANSPORTATION - HIGHWAY DIVISION

JULY , 1987

TWH 30-4-87

BILL OF REINFORCING FOR ONE HEADWALL 30° SKEW CULVERT SPAN x CULVERT HEIGHT

LOCATION	SHAPE	BAR	12' X 12' NO.	12' X 12' LENGTH	12' X 12' WT.	12' X 10' NO.	12' X 10' LENGTH	12' X 10' WT.	12' X 8' NO.	12' X 8' LENGTH	12' X 8' WT.	12' X 6' NO.	12' X 6' LENGTH	12' X 6' WT.	10' X 12' NO.	10' X 12' LENGTH	10' X 12' WT.	10' X 10' NO.	10' X 10' LENGTH	10' X 10' WT.	10' X 8' NO.	10' X 8' LENGTH	10' X 8' WT.	10' X 6' NO.	10' X 6' LENGTH	10' X 6' WT.	8' X 10' NO.	8' X 10' LENGTH	8' X 10' WT.	8' X 8' NO.	8' X 8' LENGTH	8' X 8' WT.	8' X 6' NO.	8' X 6' LENGTH	8' X 6' WT.	BAR
FENCE ANCHOR (GALV.)		5fa	2	3'-1	6	2	3'-1	6	2	3'-1	6	2	3'-1	6	2	3'-1	6	2	3'-1	6	2	3'-1	6	2	3'-1	6	2	3'-1	6	2	3'-1	6	2	3'-1	6	5fa
WINGWALL, B.F.H. L		4b1	1	54'-3	37	1	45'-11	32	1	37'-7	25	1	29'-3	20	1	54'-3	37	1	45'-11	32	1	37'-7	25	1	29'-3	20	1	45'-11	32	1	37'-7	25	1	29'-3	20	4b1
WINGWALL, B.F.H. S		4b2	1	41'-3	29	1	35'-1	23	1	28'-10	19	1	22'-7	15	1	41'-3	29	1	35'-1	23	1	28'-10	19	1	22'-7	15	1	35'-1	23	1	28'-10	19	1	22'-7	15	4b2
WINGWALL, B.F.H. L		4b3	10 VAR	14'-9 TO 52'-4	228	8 VAR	14'-9 TO 44'-0	158	6 VAR	14'-9 TO 35'-7	101	4 VAR	14'-9 TO 27'-4	56	10 VAR	14'-9 TO 52'-4	228	8 VAR	14'-9 TO 44'-0	158	6 VAR	14'-9 TO 35'-7	101	4 VAR	14'-9 TO 27'-4	56	8 VAR	14'-9 TO 44'-0	158	6 VAR	14'-9 TO 35'-7	101	4 VAR	14'-9 TO 27'-4	56	4b3
WINGWALL, B.F.H. S		4b4	10 VAR	11'-11 TO 39'-10	173	8 VAR	11'-11 TO 33'-8	122	6 VAR	11'-11 TO 27'-5	79	4 VAR	11'-11 TO 21'-2	44	10 VAR	11'-11 TO 39'-10	173	8 VAR	11'-11 TO 33'-8	122	6 VAR	11'-11 TO 27'-5	79	4 VAR	11'-11 TO 21'-2	44	8 VAR	11'-11 TO 33'-8	122	6 VAR	11'-11 TO 27'-5	79	4 VAR	11'-11 TO 21'-2	44	4b4
WINGWALL, F.F.H. L		5b5	1	54'-3	59	1	45'-11	50	1	37'-7	39	1	29'-3	31	1	54'-3	59	1	45'-11	50	1	37'-7	39	1	29'-3	31	1	45'-11	50	1	37'-7	39	1	29'-3	31	5b5
WINGWALL, F.F.H. S		5b6	1	41'-3	45	1	35'-1	37	1	28'-10	30	1	22'-7	24	1	41'-3	45	1	35'-1	37	1	28'-10	30	1	22'-7	24	1	35'-1	37	1	28'-10	30	1	22'-7	24	5b6
WINGWALL, F.F.H. L		5b7	11 VAR	10'-7 TO 52'-4	367	9 VAR	10'-7 TO 44'-0	258	7 VAR	10'-7 TO 35'-7	169	5 VAR	10'-7 TO 27'-4	99	11 VAR	10'-7 TO 52'-4	367	9 VAR	10'-7 TO 44'-0	258	7 VAR	10'-7 TO 35'-7	169	5 VAR	10'-7 TO 27'-4	99	9 VAR	10'-7 TO 44'-0	258	7 VAR	10'-7 TO 35'-7	169	5 VAR	10'-7 TO 27'-4	99	5b7
WINGWALL, F.F.H. S		5b8	11 VAR	8'-8 TO 39'-10	278	9 VAR	8'-8 TO 33'-8	199	7 VAR	8'-8 TO 27'-5	132	5 VAR	8'-8 TO 21'-2	78	11 VAR	8'-8 TO 39'-10	278	9 VAR	8'-8 TO 33'-8	199	7 VAR	8'-8 TO 27'-5	132	5 VAR	8'-8 TO 21'-2	78	9 VAR	8'-8 TO 33'-8	199	7 VAR	8'-8 TO 27'-5	132	5 VAR	8'-8 TO 21'-2	78	5b8
CENTER WALL, BOTH F.H.		5b9	21 VAR	5'-4 TO 30'-9	395	17 VAR	5'-4 TO 26'-2	279	13 VAR	5'-5 TO 21'-6	182	9 VAR	5'-6 TO 16'-11	105	21 VAR	5'-4 TO 30'-9	395	17 VAR	5'-4 TO 26'-2	279	13 VAR	5'-5 TO 21'-6	182	9 VAR	5'-6 TO 16'-11	105	17 VAR	5'-4 TO 26'-2	279	13 VAR	5'-5 TO 21'-6	182	9 VAR	5'-6 TO 16'-11	105	5b9
WINGWALL, F.F.V. L		4c1	51 VAR	2'-10 TO 14'-10	301	43 VAR	2'-10 TO 12'-11	226	35 VAR	2'-10 TO 11'-0	162	26 VAR	2'-10 TO 8'-10	101	51 VAR	2'-9 TO 14'-9	298	43 VAR	2'-9 TO 12'-10	224	35 VAR	2'-9 TO 10'-11	160	26 VAR	2'-9 TO 8'-9	100	43 VAR	2'-7 TO 12'-8	219	35 VAR	2'-7 TO 10'-9	156	26 VAR	2'-7 TO 8'-7	97	4c1
WINGWALL, F.F.V. S		4c2	38 VAR	2'-11 TO 14'-9	224	32 VAR	2'-11 TO 12'-10	168	26 VAR	2'-11 TO 10'-11	120	20 VAR	2'-11 TO 9'-0	80	38 VAR	2'-10 TO 14'-8	222	32 VAR	2'-10 TO 12'-9	167	26 VAR	2'-10 TO 10'-10	119	20 VAR	2'-10 TO 8'-11	78	32 VAR	2'-8 TO 12'-7	163	26 VAR	2'-8 TO 10'-8	116	20 VAR	2'-8 TO 8'-9	76	4c2
WINGWALL, F.F.V. L		4c3	2	13'-9	18	2	11'-9	16	1	9'-9	7	2	7'-9	10	2	13'-8	18	2	11'-8	16	1	9'-8	6	2	7'-8	10	2	11'-6	15	1	9'-6	6	2	7'-6	10	4c3
WINGWALL, F.F.V. S		4c3	2	13'-9	18	2	11'-9	16	1	9'-9	7	1	7'-9	5	2	13'-8	18	2	11'-8	16	1	9'-8	6	1	7'-8	5	2	11'-6	15	1	9'-6	6	1	7'-6	5	4c3
CENTER WALL, BOTH F.V.		4c4	2	1'-9	2	2	1'-9	2	2	1'-9	2	2	1'-9	2	2	1'-8	2	2	1'-8	2	2	1'-8	2	2	1'-8	2	2	1'-6	2	2	1'-6	2	2	1'-6	2	4c4
CENTER WALL, BOTH F.V.		4c5	54 VAR	1'-11 TO 12'-5	259	45 VAR	1'-11 TO 10'-5	185	36 VAR	1'-11 TO 8'-5	124	27 VAR	1'-11 TO 6'-6	76	54 VAR	1'-10 TO 12'-4	256	45 VAR	1'-10 TO 10'-4	183	36 VAR	1'-10 TO 8'-4	122	27 VAR	1'-10 TO 6'-5	74	45 VAR	1'-8 TO 10'-2	178	36 VAR	1'-8 TO 8'-2	118	27 VAR	1'-8 TO 6'-3	71	4c5
CENTER WALL, BOTH F.V.		4c6	2	12'-7	17	2	10'-7	14	2	8'-7	11	2	6'-7	9	2	12'-6	17	2	10'-6	14	2	8'-6	11	2	6'-6	9	2	10'-4	14	2	8'-4	11	2	6'-4	8	4c6
WINGWALL, B.F.V. L		5c7	11 VAR	2'-10 TO 5'-2	46	11 VAR	2'-10 TO 5'-2	46	11 VAR	2'-10 TO 5'-2	46	11 VAR	2'-10 TO 5'-2	46	11 VAR	2'-9 TO 5'-1	45	11 VAR	2'-9 TO 5'-1	45	11 VAR	2'-9 TO 5'-1	45	11 VAR	2'-9 TO 5'-1	45	11 VAR	2'-7 TO 4'-11	43	11 VAR	2'-7 TO 4'-11	43	11 VAR	2'-7 TO 4'-11	43	5c7
WINGWALL, B.F.V. S		5c8	5 VAR	2'-11 TO 4'-2	18	5 VAR	2'-11 TO 4'-2	18	5 VAR	2'-11 TO 4'-2	18	5 VAR	2'-11 TO 4'-2	18	5 VAR	2'-10 TO 4'-1	18	5 VAR	2'-10 TO 4'-1	18	5 VAR	2'-10 TO 4'-1	18	5 VAR	2'-10 TO 4'-1	18	5 VAR	2'-8 TO 3'-11	17	5 VAR	2'-8 TO 3'-11	17	5 VAR	2'-8 TO 3'-11	17	5c8
WINGWALL, B.F.V. L		5c9	40 VAR	9'-6 TO 18'-10	591	32 VAR	9'-6 TO 16'-11	441	24 VAR	9'-6 TO 15'-0	307	15 VAR	9'-6 TO 12'-10	175	40 VAR	9'-5 TO 18'-9	588	32 VAR	9'-5 TO 16'-10	438	24 VAR	9'-5 TO 14'-11	305	15 VAR	9'-5 TO 12'-9	173	32 VAR	9'-3 TO 16'-8	432	24 VAR	9'-3 TO 14'-9	300	15 VAR	9'-3 TO 12'-7	171	5c9
WINGWALL, B.F.V. S		5c10	33 VAR	8'-6 TO 18'-9	469	27 VAR	8'-6 TO 16'-10	357	21 VAR	8'-6 TO 14'-11	256	15 VAR	8'-6 TO 13'-0	168	33 VAR	8'-5 TO 18'-8	466	27 VAR	8'-5 TO 16'-9	354	21 VAR	8'-5 TO 14'-10	255	15 VAR	8'-5 TO 12'-11	167	27 VAR	8'-3 TO 16'-7	350	21 VAR	8'-3 TO 14'-8	251	15 VAR	8'-3 TO 12'-9	164	5c10
WINGWALL, B.F.V. L		5c11	30	10'-6	329	22	10'-6	241	13	10'-6	142	-	-	-	30	10'-6	329	22	10'-6	241	13	10'-6	142	-	-	-	22	10'-6	241	13	10'-6	142	-	-	-	5c11
WINGWALL, B.F.V. S		5c11	21	10'-6	230	15	10'-6	164	8	10'-6	88	-	-	-	21	10'-6	230	15	10'-6	164	8	10'-6	88	-	-	-	15	10'-6	164	8	10'-6	88	-	-	-	5c11
WINGWALL, B.F.V. L		5c12	2	17'-9	37	2	15'-9	33	1	13'-9	14	2	11'-9	25	2	17'-8	37	2	15'-8	33	1	13'-8	14	2	11'-8	24	2	15'-6	32	1	13'-6	14	2	11'-6	24	5c12
WINGWALL, B.F.V. S		5c12	2	17'-9	37	2	15'-9	33	1	13'-9	14	1	11'-9	12	2	17'-8	37	2	15'-8	33	1	13'-8	14	1	11'-8	12	2	15'-6	32	1	13'-6	14	1	11'-6	12	5c12
APRON, LONGIT.,BOTT.		4d1	17	31'-3	355	17	26'-8	303	17	22'-1	251	17	17'-5	198	15	31'-3	313	13	26'-8	232	13	22'-1	192	13	17'-5	151	11	26'-8	196	11	22'-1	162	11	17'-5	128	4d1
APRON, LONGIT.,BOTT. L		4d2	3	48'-0	100	3	39'-7	79	3	31'-4	63	3	23'-1	47	3	48'-0	100	3	39'-7	79	3	31'-4	63	3	23'-1	47	3	39'-7	79	3	31'-4	63	3	23'-1	47	4d2
APRON, LONGIT.,BOTT. S		4d3	3	36'-9	74	3	30'-8	61	3	24'-5	49	3	18'-4	37	3	36'-9	74	3	30'-8	61	3	24'-5	49	3	18'-4	37	3	30'-8	61	3	24'-5	49	3	18'-4	37	4d3
APRON, LONGIT.,TOP		6f1	24	31'-3	1127	24	26'-8	961	24	22'-1	796	24	17'-5	628	20	31'-3	939	20	26'-8	801	20	22'-1	663	20	17'-5	523	16	26'-8	641	16	22'-1	531	16	17'-5	419	6f1
APRON, LONGIT.,TOP L		6f2	11 VAR	5'-4 TO 28'-6	279	9 VAR	5'-4 TO 23'-10	197	7 VAR	5'-4 TO 19'-3	129	5 VAR	5'-3 TO 14'-7	74	11 VAR	5'-4 TO 28'-6	279	9 VAR	5'-4 TO 23'-10	197	7 VAR	5'-4 TO 19'-3	129	5 VAR	5'-3 TO 14'-7	74	9 VAR	5'-4 TO 23'-10	197	7 VAR	5'-4 TO 19'-3	129	5 VAR	5'-3 TO 14'-7	74	6f2
APRON, LONGIT.,TOP S		6f3	8 VAR	7'-0 TO 28'-9	215	7 VAR	5'-5 TO 24'-1	155	5 VAR	6'-11 TO 19'-6	99	4 VAR	5'-5 TO 14'-10	61	8 VAR	7'-0 TO 28'-9	215	7 VAR	5'-5 TO 24'-1	155	5 VAR	6'-11 TO 19'-6	99	4 VAR	5'-5 TO 14'-10	61	7 VAR	5'-5 TO 24'-1	155	5 VAR	6'-11 TO 19'-6	99	4 VAR	5'-5 TO 14'-10	61	6f3
APRON, LONGIT.,TOP L		6f4	1	54'-3	84	1	45'-11	72	1	37'-7	56	1	29'-3	44	1	54'-3	84	1	45'-11	72	1	37'-7	56	1	29'-3	44	1	45'-11	72	1	37'-7	56	1	29'-3	44	6f4
APRON, LONGIT.,TOP S		6f5	1	41'-3	65	1	35'-1	53	1	28'-10	43	1	22'-7	34	1	41'-3	65	1	35'-1	53	1	28'-10	43	1	22'-7	34	1	35'-1	53	1	28'-10	43	1	22'-7	34	6f5
PARAPET, VERTICAL		4i1	51	6'-4	216	49	6'-4	207	49	6'-4	207	49	6'-4	207	43	6'-4	182	41	6'-4	173	41	6'-4	173	41	6'-4	173	33	6'-4	140	33	6'-4	140	33	6'-4	140	4i1
PARAPET, HORIZONTAL		7j1	4	29'-2	238	4	29'-0	237	4	29'-0	237	4	28'-11	236	4	24'-7	201	4	24'-4	199	4	24'-4	199	4	24'-3	198	4	19'-9	161	4	19'-9	161	4	19'-8	161	7j1
APRON,TRANS.,TOP		6m1	12 VAR	28'-10 TO 31'-0	539	12 VAR	28'-6 TO 30'-7	532	12 VAR	28'-6 TO 30'-7	532	12 VAR	28'-3 TO 30'-4	528	10 VAR	24'-9 TO 26'-5	384	10 VAR	24'-3 TO 25'-11	377	10 VAR	24'-3 TO 25'-11	377	10 VAR	23'-11 TO 25'-8	372	9 VAR	19'-11 TO 21'-5	279	9 VAR	19'-11 TO 21'-5	279	8 VAR	19'-8 TO 21'-0	244	6m1
APRON,TRANS.,TOP		6m2	18 VAR	31'-2 TO 37'-8	930	12 VAR	30'-9 TO 34'-11	592	6 VAR	30'-9 TO 32'-8	286	-	-	-	22 VAR	26'-7 TO 34'-5	1008	16 VAR	26'-1 TO 31'-8	694	10 VAR	26'-1 TO 29'-5	417	3 VAR	25'-10 TO 26'-6	118	18 VAR	21'-8 TO 28'-0	671	12 VAR	21'-8 TO 25'-9	427	7 VAR	21'-2 TO 23'-3	234	6m2
APRON,TRANS.,TOP		6m3	10 VAR	18'-8 TO 28'-8	355	10 VAR	17'-1 TO 27'-1	332	10 VAR	15'-9 TO 25'-9	312	9 VAR	15'-5 TO 24'-3	268	8 VAR	16'-11 TO 24'-8	250	8 VAR	15'-4 TO 23'-2	231	8 VAR	14'-0 TO 21'-10	215	8 VAR	13'-8 TO 21'-6	211	7 VAR	13'-8 TO 20'-4	179	6 VAR	13'-5 TO 19'-0	146	7 VAR	10'-10 TO 17'-6	149	6m3
APRON,TRANS.,TOP		6m4	6	18'-2	164	6	16'-10	152	6	15'-9	142	6	14'-5	130	5	16'-6	124	5	15'-2	114	5	13'-11	105	5	12'-7	94	4	13'-6	81	4	12'-2	73	4	11'-0	66	6m4
APRON,TRANS.,BOTT.		6m5	24 VAR	23'-10 TO 39'-6	1142	20 VAR	23'-8 TO 36'-7	905	16 VAR	23'-8 TO 33'-10	691	12 VAR	23'-7 TO 31'-1	493	24 VAR	19'-3 TO 34'-11	976	20 VAR	19'-0 TO 32'-0	766	16 VAR	19'-0 TO 29'-3	580	12 VAR	18'-11 TO 26'-5	409	20 VAR	14'-5 TO 27'-4	627	16 VAR	14'-5 TO 24'-8	470	12 VAR	14'-4 TO 21'-10	326	6m5
CURTAIN, HORIZONTAL		6p1	4	29'-4	176	4	29'-1	175	4	29'-1	175	4	29'-0	174	4	24'-8	148	4	24'-6	147	4	24'-6	147	4	24'-4	146	4	19'-10	119	4	19'-10	119	4	19'-9	119	6p1
CURTAIN, HORIZONTAL L		6p2	4	28'-0	168	4	24'-0	144	4	20'-0	120	4	16'-0	96	4	28'-0	168	4	24'-0	144	4	20'-0	120	4	16'-0	96	4	24'-0	144	4	20'-0	120	4	16'-0	96	6p2
CURTAIN, HORIZONTAL S		6p3	4	16'-0	96	4	13'-11	84	4	11'-10	71	4	9'-8	58	4	16'-0	96	4	13'-11	84	4	11'-10	71	4	9'-8	58	4	13'-11	84	4	11'-10	71	4	9'-8	58	6p3
WING SLOPE, BOTH F. L		6s1	2	8'-0	24	2	8'-0	24	2	8'-0	24	2	8'-0	24	2	8'-0	24	2	8'-0	24	2	8'-0	24	2	8'-0	24	2	8'-0	24	2	8'-0	24	2	8'-0	24	6s1
WING SLOPE, BOTH F. S		6s2	2	6'-11	21	2	6'-11	21	2	6'-11	21	2	6'-11	21	2	6'-11	21	2	6'-11	21	2	6'-11	21	2	6'-11	21	2	6'-11	21	2	6'-11	21	2	6'-11	21	6s2
WING SLOPE, BOTH F. L		6s3	2	49'-4	154	2	40'-9	128	2	32'-2	97	2	23'-7	71	2	49'-4	154	2	40'-9	128	2	32'-2	97	2	23'-7	71	2	40'-9	128	2	32'-2	97	2	23'-7	71	6s3
WING SLOPE, BOTH F. S		6s4	2	38'-6	116	2	31'-11	96	2	25'-4	76	2	18'-10	57	2	38'-6	116	2	31'-11	96	2	25'-4	76	2	18'-10	57	2	31'-11	96	2	25'-4	76	2	18'-10	57	6s4
WING SLOPE, F.F L		6s5	1	54'-7	85	1	46'-0	72	1	37'-5	56	1	28'-10	43	1	54'-7	85	1	46'-0	72	1	37'-5	56	1	28'-10	43	1	46'-0	72	1	37'-5	56	1	28'-10	43	6s5
WING SLOPE, F.F S		6s6	1	42'-8	67	1	36'-1	54	1	29'-6	44	1	23'-0	35	1	42'-8	67	1	36'-1	54	1	29'-6	44	1	23'-0	35	1	36'-1	54	1	29'-6	44	1	23'-0	35	6s6
CENTER WALL, BOTH F.H.		6s7	2	32'-11	99	2	27'-11	84	2	22'-11	69	2	17'-11	54	2	32'-11	99	2	27'-11	84	2	22'-11	69	2	17'-11	54	2	27'-11	84	2	22'-11	69	2	17'-11	54	6s7
CURTAIN, VERT.		5t1	49	7'-11	405	43	7'-5	333	38	6'-11	274	34	6'-5	228	45	7'-11	372	39	7'-5	302	34	6'-11	245	30	6'-5	201	35	7'-5	271	30	6'-11	216	26	6'-5	174	5t1
ESTIMATED QUANTITIES ONE HEADWALL	REINF. STEEL		11,507 lbs.			9177 lbs.			7020 lbs.			5051 lbs.			10,742 lbs.			8472 lbs.			6419 lbs.			4547 lbs.			7770 lbs.			5807 lbs.			4094 lbs.		
	CONCRETE	PARAPET △	3.2	105.6 cu. yd.		3.0	77.3 cu. yd.		3.0	58.3 cu. yd.		2.9	40.5 cu. yd.		2.9	96.4 cu. yd.		2.7	69.7 cu. yd.		2.7	52.1 cu. yd.		2.6	35.7 cu. yd.		2.3	60.4 cu. yd.		2.3	44.7 cu. yd.		2.2	30.1 cu. yd.	
		WINGWALLS	33.2			20.0			13.5			7.4			33.2			20.0			13.5			7.4			20.0			13.5			7.4		
		FOOTINGS	69.2			54.3			41.8			30.2			60.3			47.0			35.9			25.7			38.1			28.9			20.5		

BENT BAR DETAILS

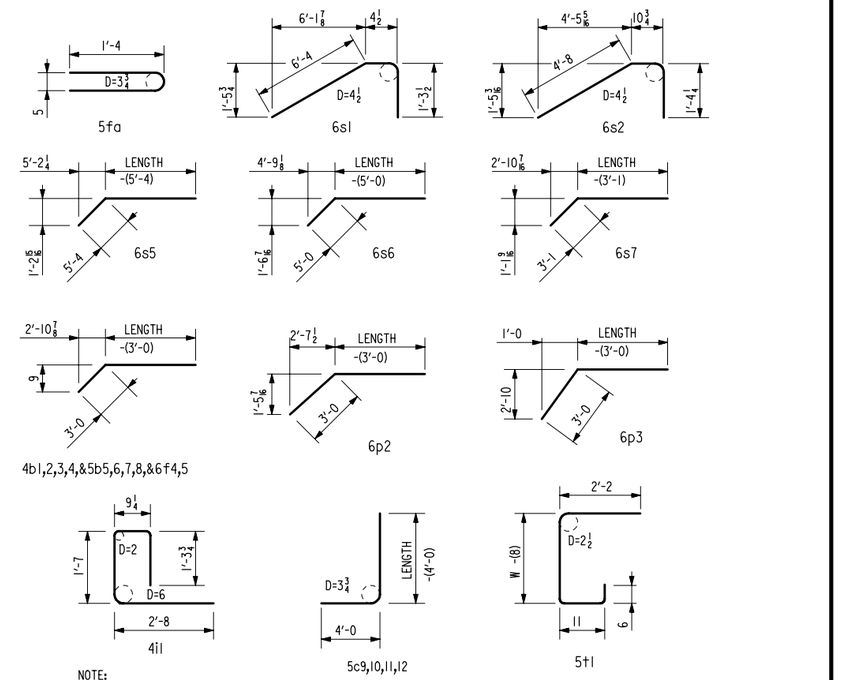

NOTE:
ALL DIMENSIONS ARE OUT TO OUT.
D = PIN DIAMETER.

△ NOTE: INCLUDES TOP OF WINGWALL QUANTITIES.

WEIGHT OF BARS OVER 40'-0 LONG INCLUDE AN ALLOWANCE OF 2'-0 FOR LAP.

SUBSCRIPT L DENOTES LONG WING.
SUBSCRIPT S DENOTES SHORT WING.

NOTES:

1. SEE DRAWING TWRCB-G1-87 FOR GENERAL INFORMATION, SPECIFICATIONS, AND DESIGN STRESSES.

HEADWALL NOTES:

THIS HEADWALL IS BASED ON A 3:1 SLOPE NORMAL TO CENTERLINE OF ROADWAY.

THE SIDES OF THE FOOTING ARE TO BE FORMED TO INSURE CORRECT LINE AND GRADE.

ALL EXPOSED CORNERS OF 90° OR SHARPER ARE TO BE FILLETED WITH A 3/4" DRESSED AND BEVELED STRIP.

ALL REINFORCING IS TO BE SECURELY WIRED IN PLACE BEFORE THE CONCRETE IS POURED. ALL SLAB AND FLOOR REINFORCING STEEL IS TO BE SUPPORTED BY BAR CHAIRS AT INTERVALS OF NOT MORE THAN 3'-0 IN EITHER DIRECTION AS OUTLINED IN THE STANDARD SPECIFICATIONS.

CLEAR DISTANCE FROM FACE OF CONCRETE TO NEAR REINFORCING BAR IS TO BE 2" UNLESS OTHERWISE NOTED OR SHOWN. CLEARANCE TO THE BOTTOM ENDS OF VERTICAL BARS SHALL BE 3 INCHES.

CONCRETE QUANTITIES ARE ESTIMATED FROM BACK OF PARAPET.

HORIZONTAL TAILS OF BARS "b" & "s" ESTIMATED TO EXTEND 2'-0 BEYOND BACK OF PARAPET (INTO END OF BARREL). LONGITUDINAL BARS "d", "6f1", "6f4" AND "6f5" ESTIMATED TO PROJECT INTO END SECTION OF BARREL A MINIMUM OF 2'-0 BEYOND BACK OF PARAPET.

THE "LENGTH" COLUMN REFLECTS TOTAL NUMBER OF FEET NECESSARY TO MEET THESE REQUIREMENTS.

LATEST REVISION DATE : 1-1-98

APPROVED BY: William A. Lundquist

STANDARD DESIGN

FLARED WING HEADWALLS

FOR
TWIN REINFORCED CONCRETE BOX CULVERTS

IOWA DEPARTMENT OF TRANSPORTATION - HIGHWAY DIVISION

JULY , 1987

TWH 30-5-87

REVISED 1/98; BEND DIMENSIONS OF 4i1 BAR CHANGED.
TWH 30-5-87

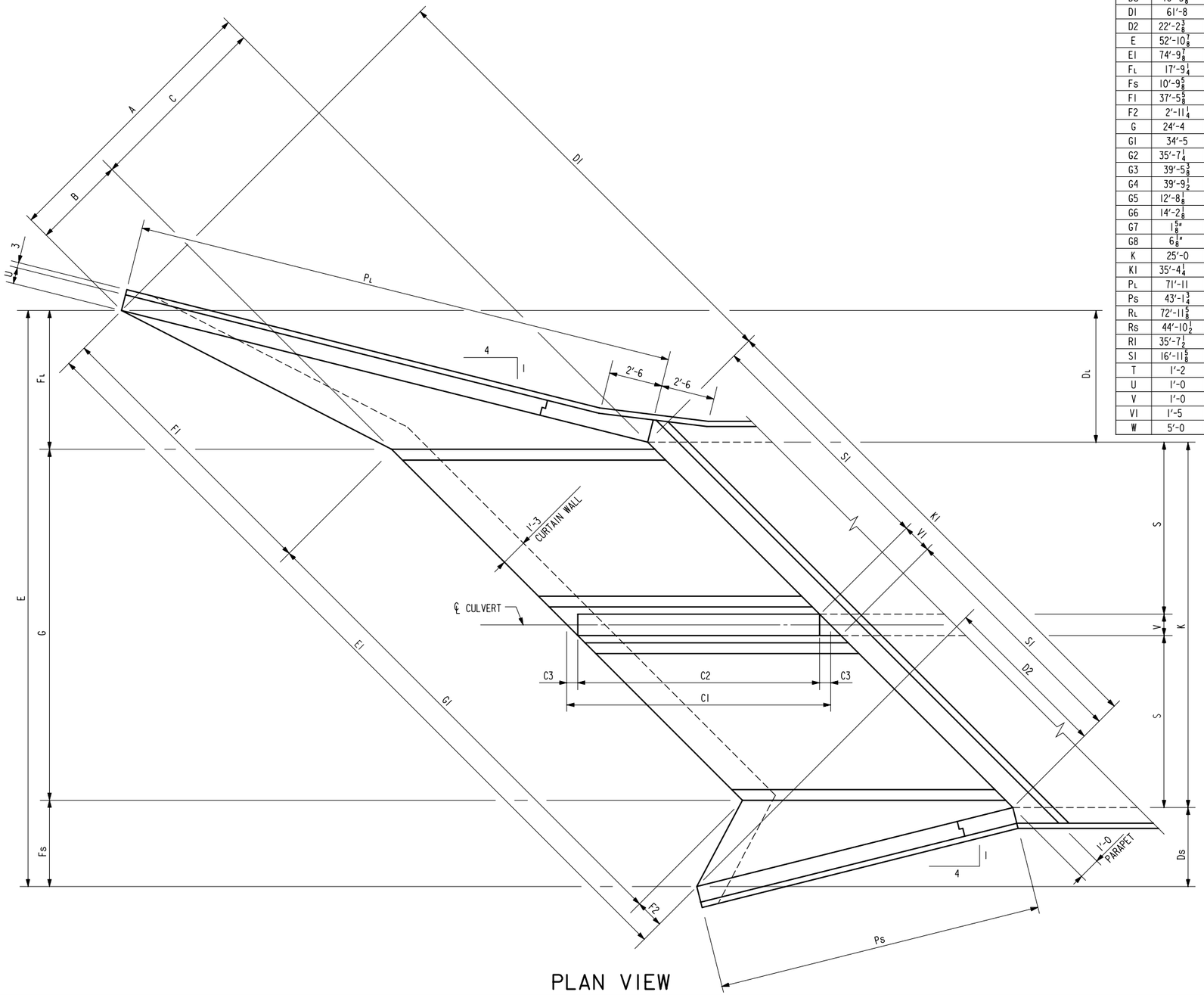

PLAN VIEW

DIMENSION TABLE

S X H	12' X 12'	12' X 10'	12' X 8'	12' X 6'	10' X 12'	10' X 10'	10' X 8'	10' X 6'	8' X 10'	8' X 8'	8' X 6'	S X H
A	37'-0	31'-0	25'-0	19'-0	37'-0	31'-0	25'-0	19'-0	31'-0	25'-0	19'-0	A
B	12'-4	10'-4	8'-4	6'-4	12'-4	10'-4	8'-4	6'-4	10'-4	8'-4	6'-4	B
C	24'-8	20'-8	16'-8	12'-8	24'-8	20'-8	16'-8	12'-8	20'-8	16'-8	12'-8	C
C1	34'-10 5/8	29'-2 3/4	23'-6 7/8	17'-11	34'-10 5/8	29'-2 3/4	23'-6 7/8	17'-11	29'-2 3/4	23'-6 7/8	17'-11	C1
C2	33'-10 5/8	28'-4 3/4	22'-8 7/8	17'-2	33'-10 5/8	28'-4 3/4	22'-8 7/8	17'-2	28'-4 3/4	22'-8 7/8	17'-2	C2
C3	6"	5"	5"	4 1/2"	6"	5"	5"	4 1/2"	5"	5"	4 1/2"	C3
DL	17'-5 1/4	14'-7 3/8	11'-9 3/8	8'-11 1/2	17'-5 1/4	14'-7 3/8	11'-9 3/8	8'-11 1/2	14'-7 3/8	11'-9 3/8	8'-11 1/2	DL
Ds	10'-5 5/8	8'-9 1/4	7'-0 7/8	5'-4 1/2	10'-5 5/8	8'-9 1/4	7'-0 7/8	5'-4 1/2	8'-9 1/4	7'-0 7/8	5'-4 1/2	Ds
D1	61'-8	51'-8	41'-8	31'-8	61'-8	51'-8	41'-8	31'-8	51'-8	41'-8	31'-8	D1
D2	22'-2 3/8	18'-7 1/4	15'-0	11'-4 3/4	22'-2 3/8	18'-7 1/4	15'-0	11'-4 3/4	18'-7 1/4	15'-0	11'-4 3/4	D2
E	52'-10 7/8	48'-2 5/8	43'-8 1/4	39'-1	48'-10 7/8	44'-2 5/8	39'-8 1/4	35'-1	40'-2 5/8	35'-8 1/4	31'-1	E
E1	74'-9 7/8	68'-2 1/4	61'-9 1/2	55'-3 1/4	69'-2	62'-6 3/8	56'-1 1/2	49'-7 3/8	56'-10 1/2	50'-5 5/8	43'-11 1/2	E1
FL	17'-9 1/4	14'-11 3/8	12'-1 3/8	9'-3 1/2	17'-9 1/4	14'-11 3/8	12'-1 3/8	9'-3 1/2	14'-11 3/8	12'-1 3/8	9'-3 1/2	FL
Fs	10'-9 5/8	9'-1 1/4	7'-4 7/8	5'-8 1/2	10'-9 5/8	9'-1 1/4	7'-4 7/8	5'-8 1/2	9'-1 1/4	7'-4 7/8	5'-8 1/2	Fs
F1	37'-5 5/8	31'-5 5/8	25'-5 5/8	19'-5 5/8	37'-5 5/8	31'-5 5/8	25'-5 5/8	19'-5 5/8	31'-5 5/8	25'-5 5/8	19'-5 5/8	F1
F2	2'-11 1/4	2'-6 1/2	2'-1 1/8	1'-8 1/8	2'-11 1/4	2'-6 1/2	2'-1 1/8	1'-8 1/8	2'-6 1/2	2'-1 1/8	1'-8 1/8	F2
G	24'-4	24'-2	24'-2	24'-1	20'-4	20'-2	20'-2	20'-1	16'-2	16'-2	16'-1	G
G1	34'-5	34'-2 1/8	34'-2 1/8	34'-0 3/4	28'-9 1/8	28'-6 1/4	28'-6 1/4	28'-4 7/8	22'-10 3/8	22'-10 3/8	22'-9	G1
G2	35'-7 1/4	35'-4 1/4	35'-4 1/8	35'-2 1/2	29'-11 3/8	29'-8 3/8	29'-8 1/4	29'-6 5/8	24'-0 1/2	24'-0 3/8	23'-10 3/4	G2
G3	39'-5 3/8	33'-1 1/2	26'-9 5/8	20'-5 3/4	39'-5 3/8	33'-1 1/2	26'-9 5/8	20'-5 3/4	33'-1 1/2	26'-9 5/8	20'-5 3/4	G3
G4	39'-9 1/2	32'-8 1/2	26'-4 3/4	19'-8 3/8	39'-9 1/2	32'-8 1/2	26'-4 3/4	19'-8 3/8	32'-8 1/2	26'-4 3/4	19'-8 3/8	G4
G5	12'-8 1/8	10'-7 3/4	8'-7 1/4	6'-6 3/4	12'-8 1/8	10'-7 3/4	8'-7 1/4	6'-6 3/4	10'-7 3/4	8'-7 1/4	6'-6 3/4	G5
G6	14'-2 1/8	11'-10 3/4	9'-10 3/8	7'-8 1/2	14'-2 1/8	11'-10 3/4	9'-10 3/8	7'-8 1/2	11'-10 3/4	9'-10 3/8	7'-8 1/2	G6
G7	1 5/8"	10 1/2"	10 1/2"	1'-2 3/4	1 5/8"	10 1/2"	10 1/2"	1'-2 3/4	10 1/2"	10 1/2"	1'-2 3/4	G7
G8	6 1/8"	8 1/4"	8 1/4"	9 1/4"	6 1/8"	8 1/4"	8 1/4"	9 1/4"	8 1/4"	8 1/4"	9 1/4"	G8
K	25'-0	24'-10	24'-10	24'-9	21'-0	20'-10	20'-10	20'-9	16'-10	16'-10	16'-9	K
K1	35'-4 1/4	35'-1 1/2	35'-1 1/2	35'-0	29'-8 3/8	29'-5 1/2	29'-5 1/2	29'-4 1/8	23'-9 5/8	23'-9 5/8	23'-8 1/4	K1
PL	71'-11	60'-3	48'-7 1/8	36'-11 1/8	71'-11	60'-3	48'-7 1/8	36'-11 1/8	60'-3	48'-7 1/8	36'-11 1/8	PL
Ps	43'-1 3/4	36'-1 7/8	29'-1 7/8	22'-1 7/8	43'-1 3/4	36'-1 7/8	29'-1 7/8	22'-1 7/8	36'-1 7/8	29'-1 7/8	22'-1 7/8	Ps
RL	72'-11 1/8	61'-1 5/8	49'-3 5/8	37'-5 5/8	72'-11 1/8	61'-1 5/8	49'-3 5/8	37'-5 5/8	61'-1 5/8	49'-3 5/8	37'-5 5/8	RL
Rs	44'-10 1/2	37'-7 1/4	30'-3 7/8	23'-0 1/2	44'-10 1/2	37'-7 1/4	30'-3 7/8	23'-0 1/2	37'-7 1/4	30'-3 7/8	23'-0 1/2	Rs
R1	35'-7 1/2	29'-9 3/8	23'-9 1/2	17'-10 1/2	35'-7 1/2	29'-9 3/8	23'-9 1/2	17'-10 1/2	29'-9 3/8	23'-9 1/2	17'-10 1/2	R1
S1	16'-11 5/8	16'-11 5/8	16'-11 5/8	16'-11 5/8	14'-1 3/4	14'-1 3/4	14'-1 3/4	14'-1 3/4	11'-3 3/4	11'-3 3/4	11'-3 3/4	S1
T	1'-2	1'-2	1'-2	1'-2	1'-1	1'-1	1'-1	1'-1	11"	11"	11"	T
U	1'-0	10"	10"	9"	1'-0	10"	10"	9"	10"	10"	9"	U
V	1'-0	10"	10"	9"	1'-0	10"	10"	9"	10"	10"	9"	V
V1	1'-5	1'-2 1/8	1'-2 1/8	1'-0 3/4	1'-5	1'-2 1/8	1'-2 1/8	1'-0 3/4	1'-2 1/8	1'-2 1/8	1'-0 3/4	V1
W	5'-0	4'-6	4'-0	3'-6	5'-0	4'-6	4'-0	3'-6	4'-6	4'-0	3'-6	W

NOTES:

1. SEE DRAWING TWRCB-G1-87 FOR GENERAL INFORMATION, SPECIFICATIONS, AND DESIGN STRESSES.
2. SEE DRAWINGS TWH 45-2-87 THRU 45-5-87 FOR LOCATION OF CERTAIN DIMENSIONS TABULATED.
3. SEE DRAWING TWH 45-6-87 FOR HEADWALL NOTES.

LATEST REVISION DATE : 12-5-96

APPROVED BY : William A. Lundquist

STANDARD DESIGN

FLARED WING HEADWALLS

FOR

TWIN REINFORCED CONCRETE BOX CULVERTS

IOWA DEPARTMENT OF TRANSPORTATION - HIGHWAY DIVISION

JULY , 1987

TWH 45-1-87

REVISED : 12/96 ; NOTE CORRECTED.
TWH 45-1-87

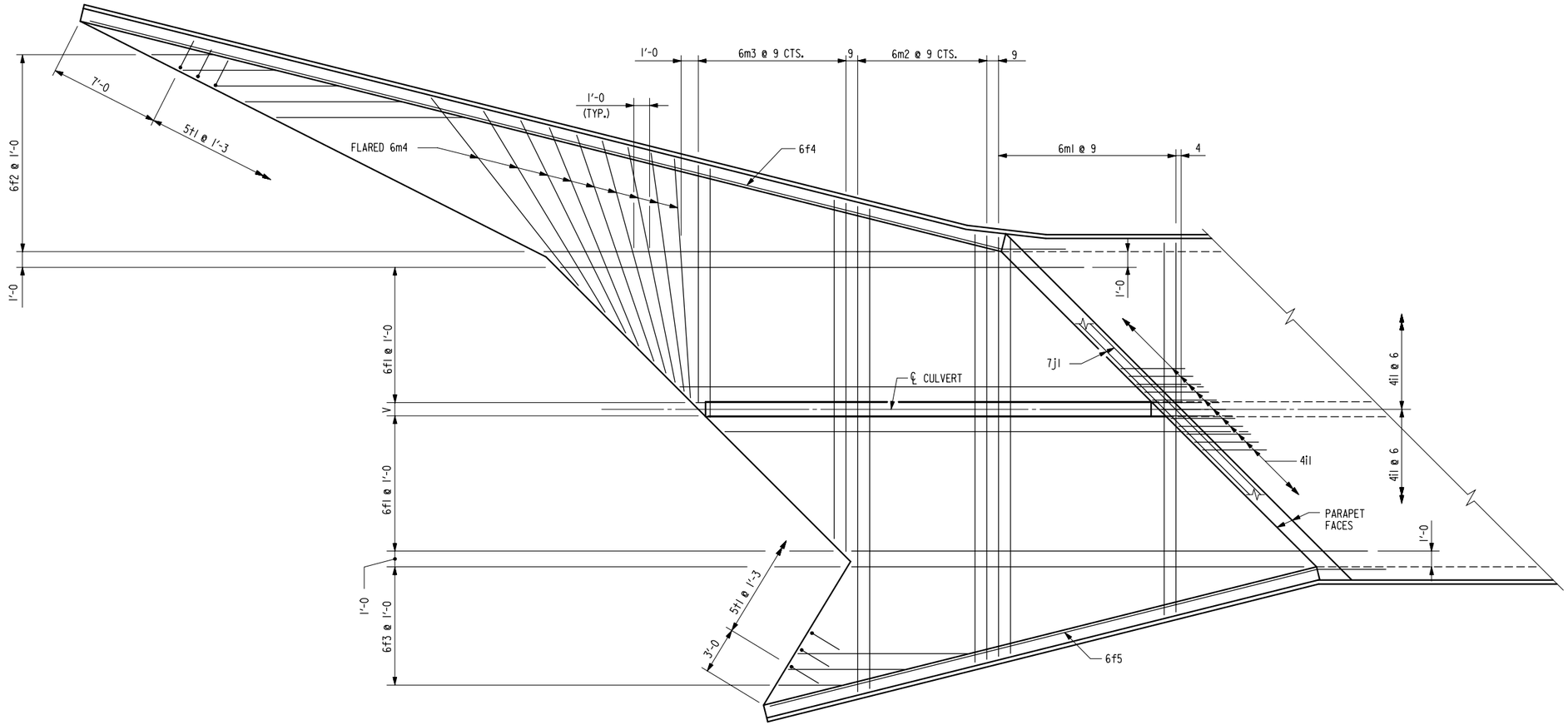

PLAN VIEW - TOP OF APRON REINFORCING BARS

NOTES :

1. BAR SPACINGS AND POSITIONS SHOWN ARE SIMILAR FOR ALL SIZES OF HEADWALLS IN THIS STANDARD.
2. WINGWALL BARS CONSISTENTLY REFERENCED FROM END OF WING FOR ALL HEADWALLS.
3. TOP TRANSVERSE FLOOR BARS ARE REFERENCED APPROXIMATELY 4" FROM THE BACK OF THE PARAPET FOR ALL HEADWALLS.
4. THERE ARE NO 5c11 BARS IN THE 6' HEIGHT HEADWALL.
5. FOR DIMENSION TABLE SEE DRAWING TWH 45-1-87.
6. FOR REINFORCING IN CURTAIN WALL SEE CURTAIN WALL DETAILS ON DRAWING TWH 45-4-87.

LATEST REVISION DATE :

APPROVED BY : William A. Lundquist

STANDARD DESIGN

FLARED WING HEADWALLS

FOR

TWIN REINFORCED CONCRETE BOX CULVERTS

IOWA DEPARTMENT OF TRANSPORTATION - HIGHWAY DIVISION

JULY , 1987

TWH 45-2-87

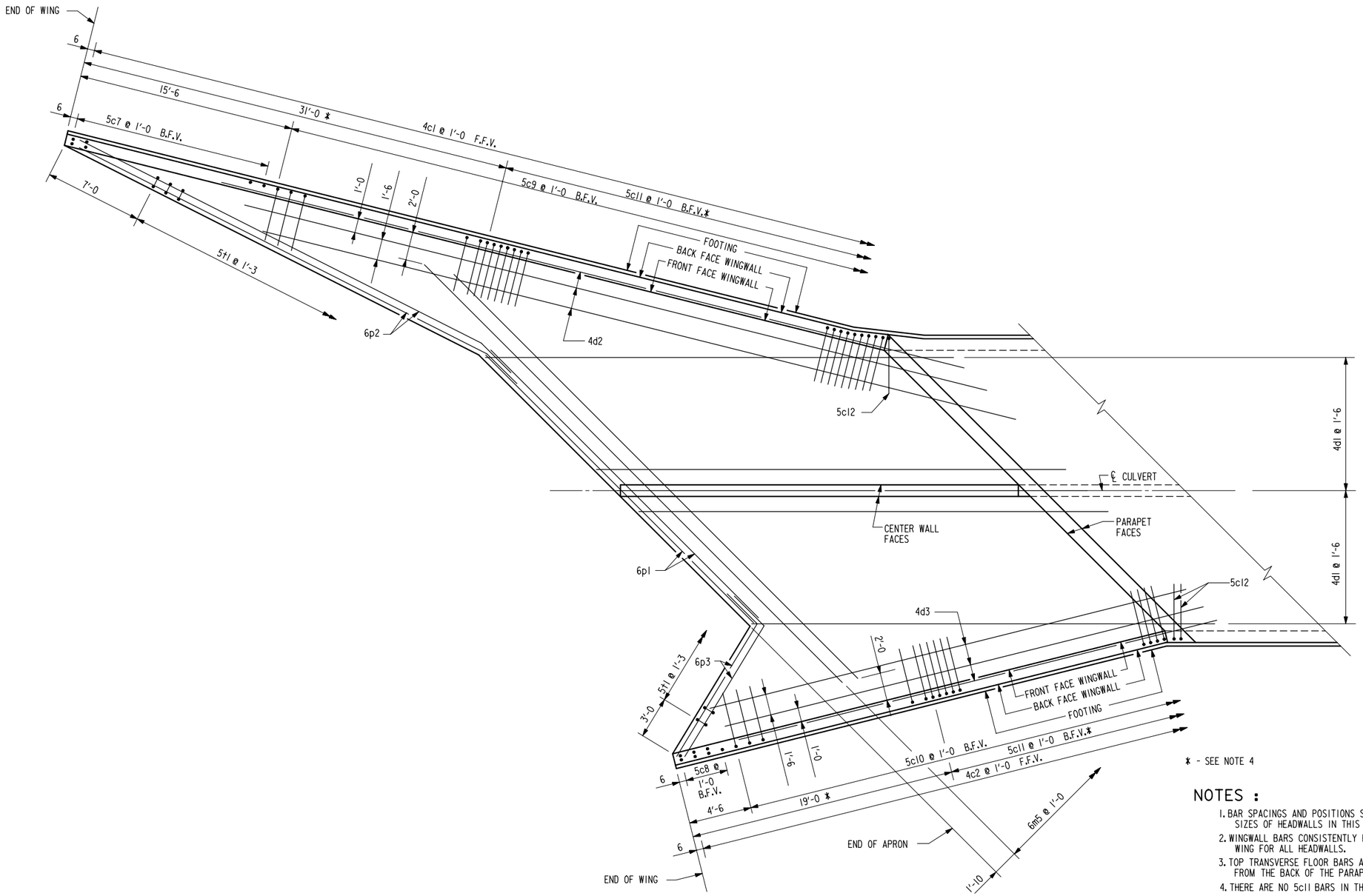

* - SEE NOTE 4

NOTES :

1. BAR SPACINGS AND POSITIONS SHOWN ARE SIMILAR FOR ALL SIZES OF HEADWALLS IN THIS STANDARD.
2. WINGWALL BARS CONSISTENTLY REFERENCED FROM END OF WING FOR ALL HEADWALLS.
3. TOP TRANSVERSE FLOOR BARS ARE REFERENCED APPROXIMATELY 4" FROM THE BACK OF THE PARAPET FOR ALL HEADWALLS.
4. THERE ARE NO 5c11 BARS IN THE 6' HEIGHT HEADWALL.
5. FOR DIMENSION TABLE SEE DRAWING TWH 45-1-87.
6. FOR REINFORCING IN CURTAIN WALL SEE CURTAIN WALL DETAILS ON DRAWING TWH 45-4-87.

PLAN VIEW - BOTTOM OF APRON REINFORCING BARS

LATEST REVISION DATE :

APPROVED BY : William A. Knudsen

STANDARD DESIGN

FLARED WING HEADWALLS

FOR

TWIN REINFORCED CONCRETE BOX CULVERTS

IOWA DEPARTMENT OF TRANSPORTATION - HIGHWAY DIVISION

JULY , 1987

TWH 45-3-87

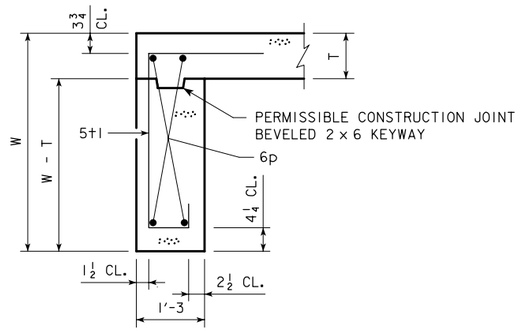

SECTION THRU CURTAIN WALL

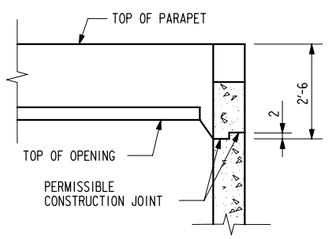

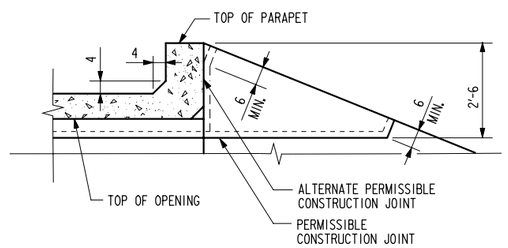

TOP OF WINGWALL DETAILS

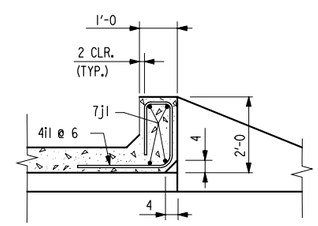

SECTION THRU PARAPET

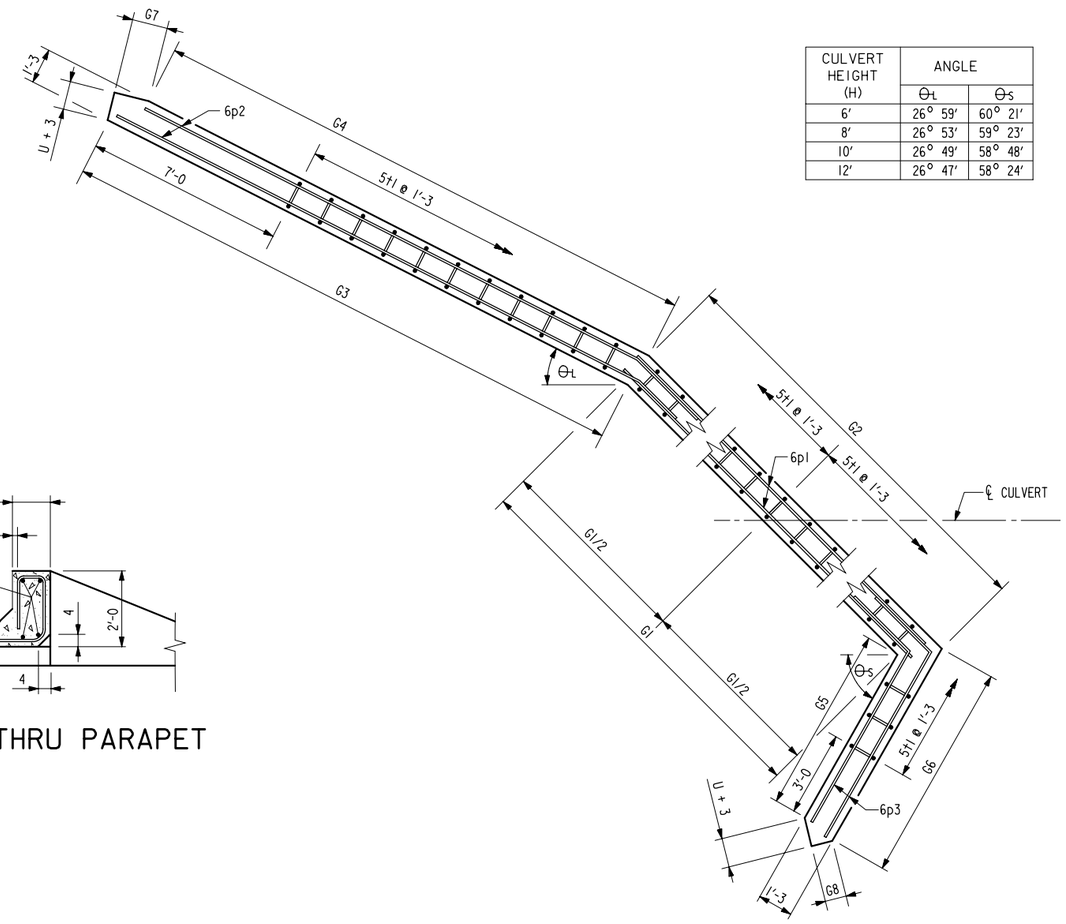

CULVERT HEIGHT (H)	ANGLE	
	θL	θS
6'	26° 59'	60° 21'
8'	26° 53'	59° 23'
10'	26° 49'	58° 48'
12'	26° 47'	58° 24'

CURTAIN WALL DETAIL

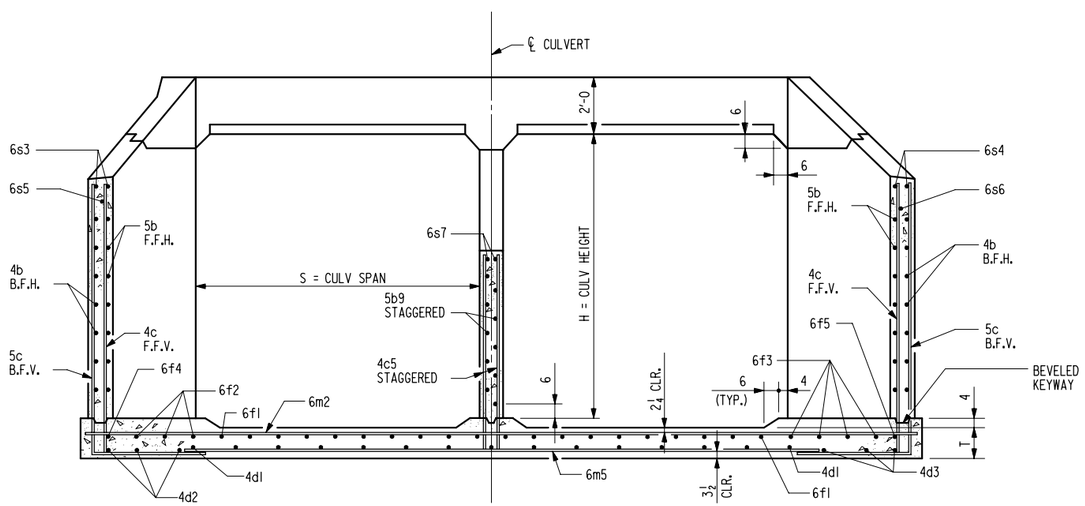

TYPICAL SECTION - NEAR CENTER OF APRON

NOTES:

1. SEE DRAWING TWRCB-G1-87 FOR GENERAL INFORMATION, SPECIFICATIONS, AND DESIGN STRESSES.
2. FOR DIMENSION TABLE SEE DRAWING TWH 45-1-87.

LATEST REVISION DATE : 04-07

APPROVED BY :

STANDARD DESIGN

FLARED WING HEADWALLS

FOR

TWIN REINFORCED CONCRETE BOX CULVERTS

IOWA DEPARTMENT OF TRANSPORTATION - HIGHWAY DIVISION

JULY , 1987

TWH 45-4-87

REVISION - 04-07 - ADDED PERMISSIBLE CONSTRUCTION JOINT IN CURTAIN WALL.
TWH 45-4-87

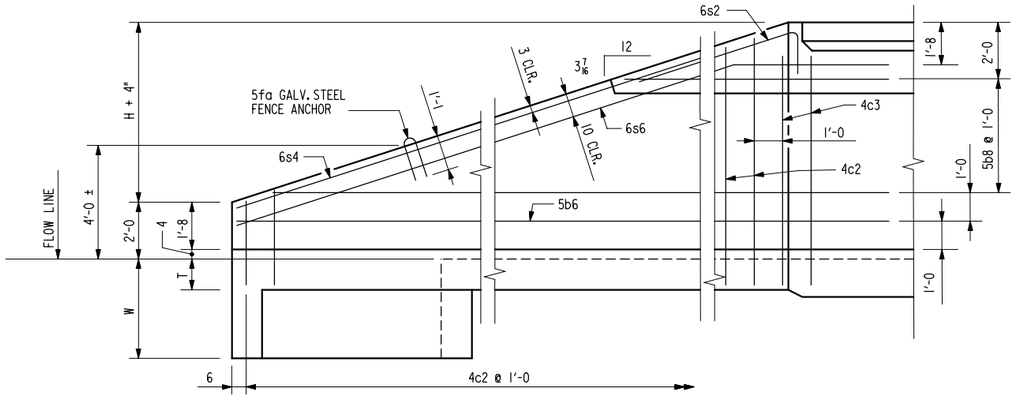

TYPICAL VIEW - FRONT FACE REINFORCING SHORT WINGWALL

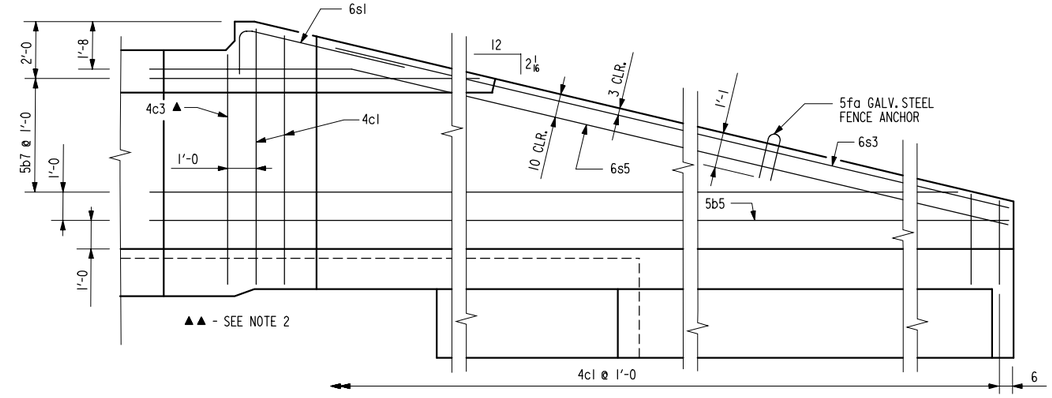

TYPICAL VIEW - FRONT FACE REINFORCING LONG WINGWALL

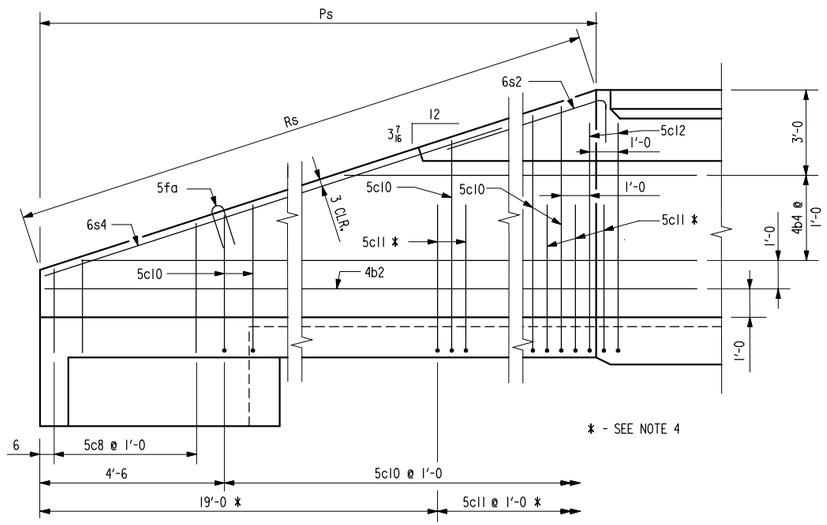

TYPICAL VIEW - BACK FACE REINFORCING SHORT WINGWALL

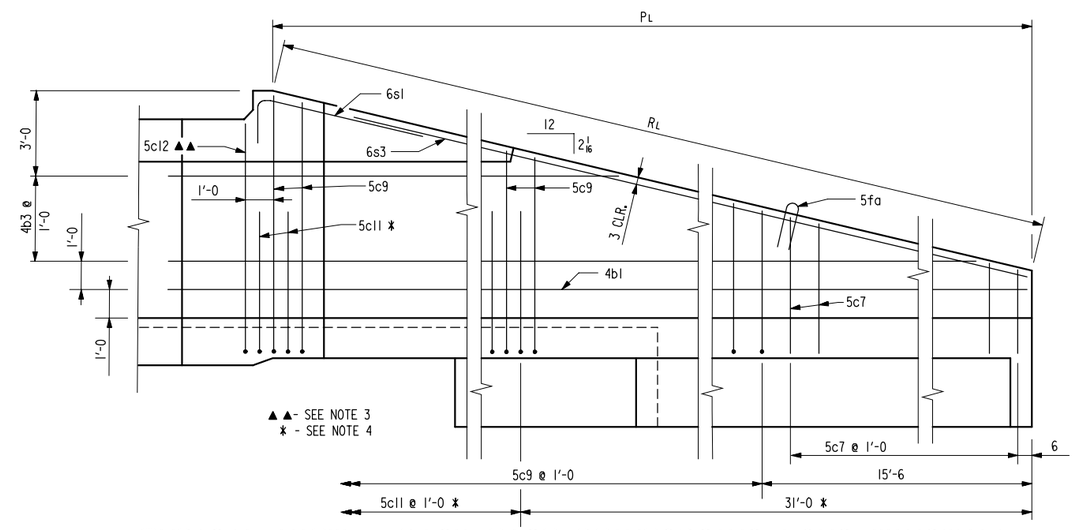

TYPICAL VIEW - BACK FACE REINFORCING LONG WINGWALL

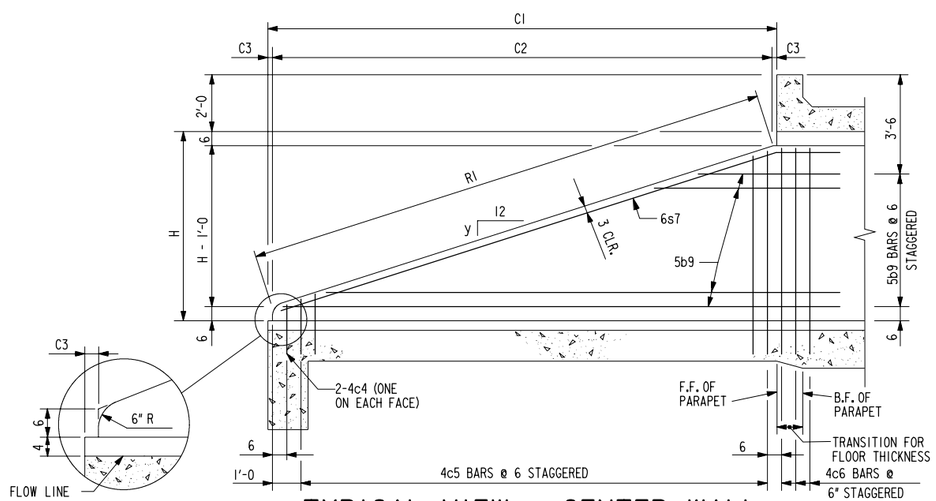

TYPICAL VIEW - CENTER WALL

CULVERT HEIGHT (H)	SLOPE y INCHES
6'	$3\frac{1}{2}$
8'	$3\frac{11}{16}$
10'	$3\frac{13}{16}$
12'	$3\frac{7}{8}$

NOTES :

1. BAR SPACINGS AND POSITIONS SHOWN ARE SIMILAR FOR ALL SIZES OF HEADWALLS IN THIS STANDARD.
2. ONE 4c3 BAR, HEADWALL HEIGHTS OF H=6', H=8', H=12' AND TWO 4c3 BARS, HEADWALL HEIGHT OF H=10'.
3. ONE 5c12 BAR, HEADWALL HEIGHTS OF H=6', H=8', H=12' AND TWO 5c12 BARS, HEADWALL HEIGHT OF H=10'.
4. NOT APPLICABLE TO HEADWALL HEIGHT OF H=6'.
5. FOR DIMENSION TABLE SEE DRAWING TWH 45-1-87.

LATEST REVISION DATE :

APPROVED BY : William A. Rawlings

STANDARD DESIGN

FLARED WING HEADWALLS

FOR

TWIN REINFORCED CONCRETE BOX CULVERTS

IOWA DEPARTMENT OF TRANSPORTATION - HIGHWAY DIVISION

JULY , 1987

TWH 45-5-87

BILL OF REINFORCING FOR ONE HEADWALL 45° SKEW CULVERT SPAN x CULVERT HEIGHT

LOCATION	SHAPE	BAR	12' X 12' NO.	12' X 12' LENGTH	12' X 12' WT.	12' X 10' NO.	12' X 10' LENGTH	12' X 10' WT.	12' X 8' NO.	12' X 8' LENGTH	12' X 8' WT.	12' X 6' NO.	12' X 6' LENGTH	12' X 6' WT.	10' X 12' NO.	10' X 12' LENGTH	10' X 12' WT.	10' X 10' NO.	10' X 10' LENGTH	10' X 10' WT.	10' X 8' NO.	10' X 8' LENGTH	10' X 8' WT.	10' X 6' NO.	10' X 6' LENGTH	10' X 6' WT.	8' X 10' NO.	8' X 10' LENGTH	8' X 10' WT.	8' X 8' NO.	8' X 8' LENGTH	8' X 8' WT.	8' X 6' NO.	8' X 6' LENGTH	8' X 6' WT.	BAR
FENCE ANCHOR (GALV.)		5fa	2	3'-1	6	2	3'-1	6	2	3'-1	6	2	3'-1	6	2	3'-1	6	2	3'-1	6	2	3'-1	6	2	3'-1	6	2	3'-1	6	2	3'-1	6	2	3'-1	6	5fa
WINGWALL, B.F.H. L		4b1	1	74'-9	51	1	63'-1	43	1	51'-5	36	1	39'-9	27	1	74'-9	51	1	63'-1	43	1	51'-5	36	1	39'-9	27	1	63'-1	43	1	51'-5	36	1	39'-9	27	4b1
WINGWALL, B.F.H. S		4b2	1	46'-0	32	1	39'-0	26	1	32'-0	21	1	25'-0	17	1	46'-0	32	1	39'-0	26	1	32'-0	21	1	25'-0	17	1	39'-0	26	1	32'-0	21	1	25'-0	17	4b2
WINGWALL, B.F.H. L		4b3	10 VAR	19'-6 TO 71'-11	313	8 VAR	19'-6 TO 60'-3	218	6 VAR	19'-6 TO 48'-8	139	4 VAR	19'-6 TO 37'-0	75	10 VAR	19'-6 TO 71'-11	313	8 VAR	19'-6 TO 60'-3	218	6 VAR	19'-6 TO 48'-8	139	4 VAR	19'-6 TO 37'-0	75	8 VAR	19'-6 TO 60'-3	218	6 VAR	19'-6 TO 48'-8	139	4 VAR	19'-6 TO 37'-0	75	4b3
WINGWALL, B.F.H. S		4b4	10 VAR	12'-10 TO 44'-4	194	8 VAR	12'-10 TO 37'-4	134	6 VAR	12'-10 TO 30'-4	86	4 VAR	12'-10 TO 23'-4	48	10 VAR	12'-10 TO 44'-4	194	8 VAR	12'-10 TO 37'-4	134	6 VAR	12'-10 TO 30'-4	86	4 VAR	12'-10 TO 23'-4	48	8 VAR	12'-10 TO 37'-4	134	6 VAR	12'-10 TO 30'-4	86	4 VAR	12'-10 TO 23'-4	48	4b4
WINGWALL, F.F.H. L		5b5	1	74'-9	80	1	63'-1	68	1	51'-5	56	1	39'-9	41	1	74'-9	80	1	63'-1	68	1	51'-5	56	1	39'-9	41	1	63'-1	68	1	51'-5	56	1	39'-9	41	5b5
WINGWALL, F.F.H. S		5b6	*	46'-0	50	1	39'-0	41	1	32'-0	33	1	25'-0	26	1	46'-0	50	1	39'-0	41	1	32'-0	33	1	25'-0	26	1	39'-0	41	1	32'-0	33	1	25'-0	26	5b6
WINGWALL, F.F.H. L		5b7	11 VAR	13'-8 TO 71'-11	503	9 VAR	13'-8 TO 60'-3	355	7 VAR	13'-8 TO 48'-8	232	5 VAR	13'-8 TO 37'-0	132	11 VAR	13'-8 TO 71'-11	503	9 VAR	13'-8 TO 60'-3	355	7 VAR	13'-8 TO 48'-8	232	5 VAR	13'-8 TO 37'-0	132	9 VAR	13'-8 TO 60'-3	355	7 VAR	13'-8 TO 48'-8	232	5 VAR	13'-8 TO 37'-0	132	5b7
WINGWALL, F.F.H. S		5b8	11 VAR	9'-4 TO 44'-4	312	9 VAR	9'-4 TO 37'-4	219	7 VAR	9'-4 TO 30'-4	145	5 VAR	9'-4 TO 23'-4	85	11 VAR	9'-4 TO 44'-4	312	9 VAR	9'-4 TO 37'-4	219	7 VAR	9'-4 TO 30'-4	145	5 VAR	9'-4 TO 23'-4	85	9 VAR	9'-4 TO 37'-4	219	7 VAR	9'-4 TO 30'-4	145	5 VAR	9'-4 TO 23'-4	85	5b8
CENTER WALL, BOTH F.H.		5b9	21 VAR	5'-11 TO 36'-9	467	17 VAR	6'-0 TO 31'-3	330	13 VAR	6'-1 TO 25'-7	215	9 VAR	6'-3 TO 20'-0	123	21 VAR	5'-11 TO 36'-9	467	17 VAR	6'-0 TO 31'-3	330	13 VAR	6'-1 TO 25'-7	215	9 VAR	6'-3 TO 20'-0	123	17 VAR	6'-0 TO 31'-3	330	13 VAR	6'-1 TO 25'-7	215	9 VAR	6'-3 TO 20'-0	123	5b9
WINGWALL, F.F.V. L		4c1	72 VAR	2'-10 TO 15'-0	429	60 VAR	2'-10 TO 12'-11	316	49 VAR	2'-10 TO 11'-0	226	37 VAR	2'-10 TO 9'-0	146	72 VAR	2'-9 TO 14'-11	425	60 VAR	2'-9 TO 12'-10	312	49 VAR	2'-9 TO 10'-11	224	37 VAR	2'-9 TO 8'-11	144	60 VAR	2'-7 TO 12'-8	306	49 VAR	2'-7 TO 10'-9	218	37 VAR	2'-7 TO 8'-9	140	4c1
WINGWALL, F.F.V. S		4c2	43 VAR	2'-10 TO 14'-10	254	36 VAR	2'-10 TO 12'-10	188	29 VAR	2'-10 TO 10'-10	132	22 VAR	2'-10 TO 8'-10	86	43 VAR	2'-9 TO 14'-9	251	36 VAR	2'-9 TO 12'-9	186	29 VAR	2'-9 TO 10'-9	131	22 VAR	2'-9 TO 8'-9	85	36 VAR	2'-7 TO 12'-7	182	29 VAR	2'-7 TO 10'-7	127	22 VAR	2'-7 TO 8'-7	82	4c2
WINGWALL, F.F.V. L		4c3	1	13'-9	9	2	11'-9	16	1	9'-9	7	1	7'-9	5	1	13'-8	9	2	11'-8	16	1	9'-8	6	1	7'-8	5	2	11'-6	15	1	9'-6	6	1	7'-6	5	4c3
WINGWALL, F.F.V. S		4c3	2	13'-9	18	2	11'-9	16	2	9'-9	13	2	7'-9	10	2	13'-8	18	2	11'-8	16	2	9'-8	13	2	7'-8	10	2	11'-6	15	2	9'-6	13	2	7'-6	10	4c3
CENTER WALL, BOTH F.V.		4c4	2	1'-9	2	2	1'-9	2	2	1'-9	2	2	1'-8	2	2	1'-8	2	2	1'-8	2	2	1'-8	2	2	1'-7	2	2	1'-6	2	2	1'-6	2	2	1'-5	2	4c4
CENTER WALL, BOTH F.V.		4c5	66 VAR	1'-10 TO 12'-5	314	55 VAR	1'-10 TO 10'-5	225	44 VAR	1'-10 TO 8'-6	152	33 VAR	1'-10 TO 6'-6	92	66 VAR	1'-9 TO 12'-4	310	55 VAR	1'-9 TO 10'-4	222	44 VAR	1'-9 TO 8'-5	149	33 VAR	1'-9 TO 6'-5	90	55 VAR	1'-7 TO 10'-2	216	44 VAR	1'-7 TO 8'-3	145	33 VAR	1'-7 TO 6'-3	86	4c5
CENTER WALL, BOTH F.V.		4c6	3	12'-7	25	3	10'-7	21	3	8'-7	17	3	6'-7	13	3	12'-6	25	3	10'-6	21	3	8'-6	17	3	6'-6	13	3	10'-4	21	3	8'-4	17	3	6'-4	13	4c6
WINGWALL, B.F.V. L		5c7	15 VAR	2'-10 TO 5'-3	63	15 VAR	2'-10 TO 5'-3	63	15 VAR	2'-10 TO 5'-3	63	15 VAR	2'-10 TO 5'-3	63	15 VAR	2'-9 TO 5'-2	62	15 VAR	2'-9 TO 5'-2	62	15 VAR	2'-9 TO 5'-2	62	15 VAR	2'-9 TO 5'-2	62	15 VAR	2'-7 TO 5'-0	59	15 VAR	2'-7 TO 5'-0	59	15 VAR	2'-7 TO 5'-0	59	5c7
WINGWALL, B.F.V. S		5c8	4 VAR	2'-10 TO 3'-8	14	4 VAR	2'-10 TO 3'-8	14	4 VAR	2'-10 TO 3'-8	14	4 VAR	2'-10 TO 3'-8	14	4 VAR	2'-9 TO 3'-7	13	4 VAR	2'-9 TO 3'-7	13	4 VAR	2'-9 TO 3'-7	13	4 VAR	2'-9 TO 3'-7	13	4 VAR	2'-7 TO 3'-5	13	4 VAR	2'-7 TO 3'-5	13	4 VAR	2'-7 TO 3'-5	13	5c8
WINGWALL, B.F.V. L		5c9	57 VAR	9'-5 TO 19'-0	845	45 VAR	9'-5 TO 16'-11	618	34 VAR	9'-5 TO 15'-0	433	22 VAR	9'-5 TO 13'-0	257	57 VAR	9'-4 TO 18'-11	840	45 VAR	9'-4 TO 16'-10	614	34 VAR	9'-4 TO 14'-11	430	22 VAR	9'-4 TO 12'-11	255	45 VAR	9'-2 TO 16'-8	606	34 VAR	9'-2 TO 14'-9	424	22 VAR	9'-2 TO 12'-9	251	5c9
WINGWALL, B.F.V. S		5c10	39 VAR	8'-0 TO 18'-10	546	32 VAR	8'-0 TO 16'-10	414	25 VAR	8'-0 TO 14'-10	298	18 VAR	8'-0 TO 12'-10	196	39 VAR	7'-11 TO 18'-9	542	32 VAR	7'-11 TO 16'-9	412	25 VAR	7'-11 TO 14'-9	296	18 VAR	7'-11 TO 12'-9	194	32 VAR	7'-9 TO 16'-7	406	25 VAR	7'-9 TO 14'-7	291	18 VAR	7'-9 TO 12'-7	191	5c10
WINGWALL, B.F.V. L		5c11	43	10'-6	471	31	10'-6	340	19	10'-6	208	-	-	-	43	10'-6	471	31	10'-6	339	19	10'-6	208	-	-	-	31	10'-6	339	19	10'-6	208	-	-	-	5c11
WINGWALL, B.F.V. S		5c11	26	10'-6	285	19	10'-6	208	12	10'-6	131	-	-	-	26	10'-6	285	19	10'-6	208	12	10'-6	131	-	-	-	19	10'-6	208	12	10'-6	131	-	-	-	5c11
WINGWALL, B.F.V. L		5c12	1	17'-8	18	2	15'-8	33	1	13'-8	14	1	11'-8	12	1	17'-7	18	2	15'-7	33	1	13'-7	14	1	11'-7	12	2	15'-5	32	1	13'-5	14	1	11'-5	12	5c12
WINGWALL, B.F.V. S		5c12	2	17'-8	37	2	15'-8	33	2	13'-8	29	2	11'-8	24	2	17'-7	37	2	15'-7	33	2	13'-7	28	2	11'-7	24	2	15'-5	32	2	13'-5	28	2	11'-5	24	5c12
APRON, LONGIT.,BOTT.		4d1	17	38'-0	432	17	32'-4	367	17	26'-9	304	17	21'-1	239	15	38'-0	381	13	32'-4	281	13	26'-9	232	13	21'-1	183	11	32'-4	238	11	26'-9	197	11	21'-1	155	4d1
APRON, LONGIT.,BOTT. L		4d2	3	67'-3	139	3	55'-8	116	3	44'-0	92	3	32'-6	65	3	67'-3	139	3	55'-8	116	3	44'-0	92	3	32'-6	65	3	55'-8	116	3	44'-0	92	3	32'-6	65	4d2
APRON, LONGIT.,BOTT. S		4d3	3	41'-10	88	3	34'-10	70	3	27'-11	56	3	21'-0	42	3	41'-10	88	3	34'-10	70	3	27'-11	56	3	21'-0	42	3	34'-10	70	3	27'-11	56	3	21'-0	42	4d3
APRON, LONGIT.,TOP		6f1	24	38'-0	1370	24	32'-4	1166	24	26'-9	964	24	21'-1	760	20	38'-0	1142	20	32'-4	971	20	26'-9	804	20	21'-1	633	16	32'-4	777	16	26'-9	643	16	21'-1	507	6f1
APRON, LONGIT.,TOP L		6f2	15 VAR	6'-6 TO 34'-10	466	12 VAR	6'-11 TO 29'-2	325	9 VAR	7'-3 TO 23'-6	208	7 VAR	5'-7 TO 17'-10	123	15 VAR	6'-6 TO 34'-10	466	12 VAR	6'-11 TO 29'-2	325	9 VAR	7'-3 TO 23'-6	208	7 VAR	5'-7 TO 17'-10	123	12 VAR	6'-11 TO 29'-2	325	9 VAR	7'-3 TO 23'-6	208	7 VAR	5'-7 TO 17'-10	123	6f2
APRON, LONGIT.,TOP S		6f3	9 VAR	8'-1 TO 35'-2	292	8 VAR	5'-9 TO 29'-6	212	6 VAR	6'-10 TO 23'-10	138	4 VAR	7'-11 TO 18'-2	78	9 VAR	8'-1 TO 35'-2	292	8 VAR	5'-9 TO 29'-6	212	6 VAR	6'-10 TO 23'-10	138	4 VAR	7'-11 TO 18'-2	78	8 VAR	5'-9 TO 29'-6	212	6 VAR	6'-10 TO 23'-10	138	4 VAR	7 '-11 TO 18'-2	78	6f3
APRON, LONGIT.,TOP L		6f4	1	74'-8	115	1	63'-1	98	1	51'-5	80	1	39'-9	60	1	74'-8	115	1	63'-1	98	1	51'-5	80	1	39'-9	60	1	63'-1	98	1	51'-5	80	1	39'-9	60	6f4
APRON, LONGIT.,TOP S		6f5	1	45'-11	72	1	39'-0	59	1	32'-0	48	1	25'-0	38	1	45'-11	72	1	39'-0	59	1	32'-0	48	1	25'-0	38	1	39'-0	59	1	32'-0	48	1	25'-0	38	6f5
PARAPET, VERTICAL		4i1	51	6'-8	227	49	6'-8	218	49	6'-8	218	49	6'-8	218	43	6'-8	191	41	6'-8	183	41	6'-8	183	41	6'-8	183	33	6'-8	147	33	6'-8	147	33	6'-8	147	4i1
PARAPET, HORIZONTAL		7j1	4	35'-8	292	4	35'-5	290	4	35'-5	290	4	35'-4	289	4	30'-0	245	4	29'-9	243	4	29'-9	243	4	29'-8	243	4	24'-1	197	4	24'-1	197	4	24'-0	196	7j1
APRON,TRANS.,TOP		6m1	19 VAR	30'-4 TO 33'-9	914	19 VAR	29'-10 TO 33'-2	899	17 VAR	29'-10 TO 32'-10	800	10 VAR	29'-6 TO 31'-3	456	17 VAR	25'-10 TO 28'-10	698	17 VAR	25'-4 TO 28'-4	685	17 VAR	25'-4 TO 28'-4	685	12 VAR	25'-0 TO 27'-1	469	14 VAR	20'-10 TO 23'-3	463	14 VAR	20'-10 TO 23'-3	463	15 VAR	20'-6 TO 23'-2	491	6m1
APRON,TRANS.,TOP		6m2	13 VAR	33'-11 TO 38'-3	705	6 VAR	33'-4 TO 35'-2	309	-	-	-	9 VAR	18'-9 TO 24'-9	294	18 VAR	29'-0 TO 35'-5	871	10 VAR	28'-6 TO 31'-11	454	3 VAR	28'-6 TO 29'-3	130	4 VAR	19'-0 TO 21'-3	121	16 VAR	23'-5 TO 29'-0	630	8 VAR	23'-5 TO 26'-0	297	-	-	-	6m2
APRON,TRANS.,TOP		6m3	17 VAR	18'-11 TO 27'-11	598	17 VAR	16'-11 TO 25'-11	547	17 VAR	15'-10 TO 25'-3	525	7 VAR	14'-6 TO 18'-0	171	14 VAR	17'-5 TO 24'-9	443	14 VAR	16'-0 TO 22'-9	407	14 VAR	14'-4 TO 21'-7	378	10 VAR	13'-0 TO 18'-3	235	11 VAR	14'-6 TO 20'-2	286	12 VAR	12'-10 TO 19'-0	287	11 VAR	11'-6 TO 17'-2	237	6m3
APRON,TRANS.,TOP		6m4	11	18'-7	307	11	16'-10	278	11	15'-6	256	11	13'-11	230	9	16'-11	228	9	15'-5	208	9	14'-0	189	9	12'-6	169	7	14'-0	147	7	12'-5	131	7	11'-1	117	6m4
APRON,TRANS.,BOTT.		6m5	24 VAR	28'-11 TO 53'-5	1526	20 VAR	28'-8 TO 48'-11	1192	16 VAR	28'-8 TO 44'-8	896	12 VAR	28'-7 TO 40'-4	624	24 VAR	23'-3 TO 47'-10	1305	20 VAR	23'-0 TO 43'-3	1007	16 VAR	23'-0 TO 39'-0	745	12 VAR	22'-11 TO 34'-8	519	20 VAR	17'-4 TO 37'-8	826	16 VAR	17'-4 TO 33'-4	609	12 VAR	17'-3 TO 29'-0	417	6m5
CURTAIN, HORIZONTAL		6p1	4	35'-7	214	4	35'-4	212	4	35'-4	212	4	35'-2	211	4	29'-11	180	4	29'-8	178	4	29'-8	178	4	29'-6	177	4	24'-0	144	4	24'-0	144	4	23'-10	143	6p1
CURTAIN, HORIZONTAL L		6p2	4	42'-4	266	4	36'-0	216	4	29'-8	178	4	23'-4	140	4	42'-4	266	4	36'-0	216	4	29'-8	178	4	23'-4	140	4	36'-0	216	4	29'-8	178	4	23'-4	140	6p2
CURTAIN, HORIZONTAL S		6p3	4	15'-8	94	4	13'-8	82	4	11'-7	70	4	9'-7	58	4	15'-8	94	4	13'-8	82	4	11'-7	70	4	9'-7	58	4	13'-8	82	4	11'-7	70	4	9'-7	58	6p3
WING SLOPE, BOTH F. L		6s1	2	8'-4	25	2	8'-4	25	2	8'-4	25	2	8'-4	25	2	8'-4	25	2	8'-4	25	2	8'-4	25	2	8'-4	25	2	8'-4	25	2	8'-4	25	2	8'-4	25	6s1
WING SLOPE, BOTH F. S		6s2	2	7'-11	24	2	7'-11	24	2	7'-11	24	2	7'-11	24	2	7'-11	24	2	7'-11	24	2	7'-11	24	2	7'-11	24	2	7'-11	24	2	7'-11	24	2	7'-11	24	6s2
WING SLOPE, BOTH F. L		6s3	2	69'-4	214	2	57'-6	179	2	45'-9	143	2	33'-10	102	2	69'-4	214	2	57'-6	179	2	45'-9	143	2	33'-10	102	2	57'-6	179	2	45'-9	143	2	33'-10	102	6s3
WING SLOPE, BOTH F. S		6s4	2	42'-3	133	2	35'-0	105	2	27'-9	83	2	20'-6	62	2	42'-3	133	2	35'-0	105	2	27'-9	83	2	20'-6	62	2	35'-0	105	2	27'-9	83	2	20'-6	62	6s4
WING SLOPE, F.F L		6s5	1	74'-6	115	1	62'-8	97	1	50'-10	79	1	39'-1	59	1	74'-6	115	1	62'-8	97	1	50'-10	79	1	39'-1	59	1	62'-8	97	1	50'-10	79	1	39'-1	59	6s5
WING SLOPE, F.F S		6s6	1	47'-4	74	1	40'-1	63	1	32'-10	49	1	25'-6	38	1	47'-4	74	1	40'-1	63	1	32'-10	49	1	25'-6	38	1	40'-1	63	1	32'-10	49	1	25'-6	38	6s6
CENTER WALL, BOTH F.		6s7	2	38'-8	116	2	32'-10	99	2	26'-10	81	2	20'-11	63	2	38'-8	116	2	32'-10	99	2	26'-10	81	2	20'-11	63	2	32'-10	99	2	26'-10	81	2	20'-11	63	6s7
CURTAIN, VERT.		5t1	61	7'-11	504	55	7'-5	425	48	6'-11	346	41	6'-5	274	57	7'-11	471	51	7'-5	395	44	6'-11	317	37	6'-5	248	47	7'-5	364	40	6'-11	289	33	6'-5	221	5t1
ESTIMATED QUANTITIES ONE HEADWALL	REINF. STEEL		14,660 lbs.			11,620 lbs.			8873 lbs.			6243 lbs.			13,704 lbs.			10,711 lbs.			8131 lbs.			5646 lbs.			9881 lbs.			7423 lbs.			5076 lbs.		
	CONCRETE	PARAPET △	4.0	137.8 cu. yd.		3.7	100.5 cu. yd.		3.7	75.2 cu. yd.		3.6	51.9 cu. yd.		3.5	126.0 cu. yd.		3.3	90.8 cu. yd.		3.3	67.5 cu. yd.		3.2	45.9 cu. yd.		2.9	79.2 cu. yd.		2.9	58.2 cu. yd.		2.8	39.0 cu. yd.	
		WINGWALLS	41.9			25.2			17.0			9.4			41.9			25.2			17.0			9.4			25.2			17.0			9.4		
		FOOTINGS	91.9			71.6			54.5			38.9			80.6			62.3			47.2			33.3			51.1			38.3			26.8		

BENT BAR DETAILS

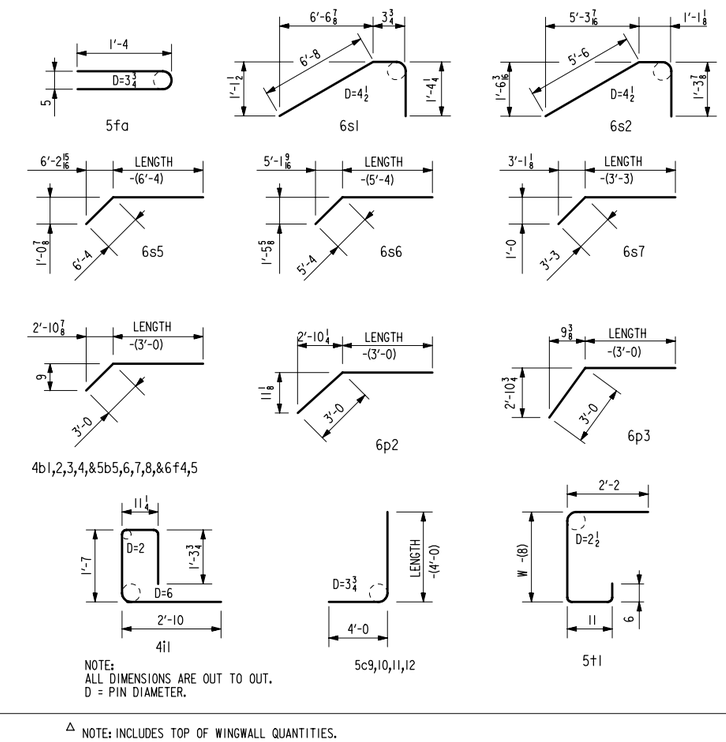

NOTE:
ALL DIMENSIONS ARE OUT TO OUT.
D = PIN DIAMETER.

△ NOTE: INCLUDES TOP OF WINGWALL QUANTITIES.
WEIGHT OF BARS OVER 40'-0 LONG INCLUDE AN ALLOWANCE OF 2'-0 FOR LAP.

SUBSCRIPT L DENOTES LONG WING.
SUBSCRIPT S DENOTES SHORT WING.

NOTES:

1. SEE DRAWING TWRCB-G1-87 FOR GENERAL INFORMATION, SPECIFICATIONS, AND DESIGN STRESSES.

HEADWALL NOTES:

THIS HEADWALL IS BASED ON A 3:1 SLOPE NORMAL TO CENTERLINE OF ROADWAY.

THE SIDES OF THE FOOTING ARE TO BE FORMED TO INSURE CORRECT LINE AND GRADE.

ALL EXPOSED CORNERS OF 90° OR SHARPER ARE TO BE FILLETED WITH A ¾" DRESSED AND BEVELED STRIP.

ALL REINFORCING IS TO BE SECURELY WIRED IN PLACE BEFORE THE CONCRETE IS POURED. ALL SLAB AND FLOOR REINFORCING STEEL IS TO BE SUPPORTED BY BAR CHAIRS AT INTERVALS OF NOT MORE THAN 3'-0 IN EITHER DIRECTION AS OUTLINED IN THE STANDARD SPECIFICATIONS.

CLEAR DISTANCE FROM FACE OF CONCRETE TO NEAR REINFORCING BAR IS TO BE 2" UNLESS OTHERWISE NOTED OR SHOWN. CLEARANCE TO THE BOTTOM ENDS OF VERTICAL BARS SHALL BE 3 INCHES.

CONCRETE QUANTITIES ARE ESTIMATED FROM BACK OF PARAPET.

HORIZONTAL TAILS OF BARS "b" & "s" ESTIMATED TO EXTEND 2'-0 BEYOND BACK OF PARAPET (INTO END OF BARREL). LONGITUDINAL BARS "d", "6f1", "6f4" AND "6f5" ESTIMATED TO PROJECT INTO END SECTION OF BARREL A MINIMUM OF 2'-0 BEYOND BACK OF PARAPET.

THE "LENGTH" COLUMN REFLECTS TOTAL NUMBER OF FEET NECESSARY TO MEET THESE REQUIREMENTS.

LATEST REVISION DATE : 02-10

APPROVED BY :

STANDARD DESIGN

FLARED WING HEADWALLS

FOR
TWIN REINFORCED CONCRETE BOX CULVERTS

IOWA DEPARTMENT OF TRANSPORTATION - HIGHWAY DIVISION

JULY , 1987

TWH 45-6-87

REVISED 02-10 - THE 6s7 VERTICAL DIMENSION FOR BENDING THE 3'-3 LEG WAS CHANGED.
ENGLISHSIGNEDTWINCULVERTS.DGN - TWH 45-6-87

CONCRETE PLACEMENT			
SIZE	FOOTING	WALLS	SLAB
8′ x 6′	2.511	1.049	2.071
8′ x 8′	2.511	1.420	2.071
8′ x 10′	2.511	1.790	2.071

ESTIMATE OF QUANTITIES - ONE JOINT - 8′ SPAN											
BILL OF REINFORCING STEEL			8′ x 6′			8′ x 8′			8′ x 10′		
MARK	LOCATION	SHAPE	NO.	LENGTH	WEIGHT	NO.	LENGTH	WEIGHT	NO.	LENGTH	WEIGHT
6x1	SLAB AND FLOOR		8	28′-4	340	8	28′-4	340	8	28′-4	340
6x2	WALLS		8	5′-4	64	8	7′-4	88	8	9′-4	112
6y1	TOP AND SIDES		35	6′-2	324	39	6′-2	361	43	6′-2	398
6y2	BOTTOM		19	7′-3	207	19	7′-3	207	19	7′-3	207
6z	BOTTOM & FLOOR		19	3′-3	93	19	3′-3	93	19	3′-3	93
TOTAL WEIGHT (LBS.)					1028			1089			1150
TOTAL CONCRETE			5.6 cu. yds.			6.0 cu. yds.			6.4 cu. yds.		

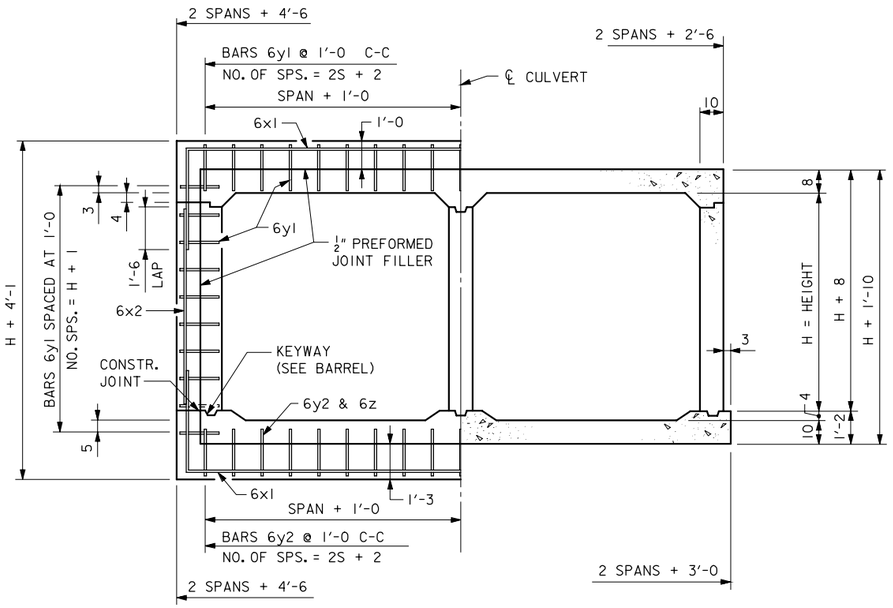

JOINT DETAIL
SECTION THRU BARREL

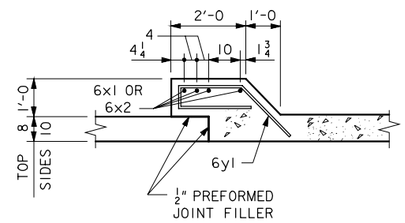

TOP & SIDES - BARS 6y1

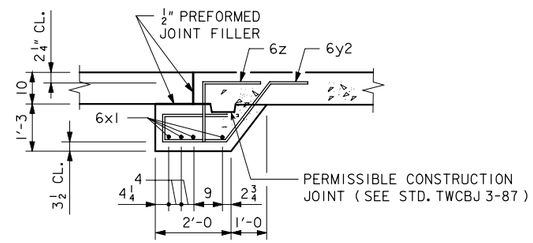

BOTTOM BARS - 6y2 & 6z

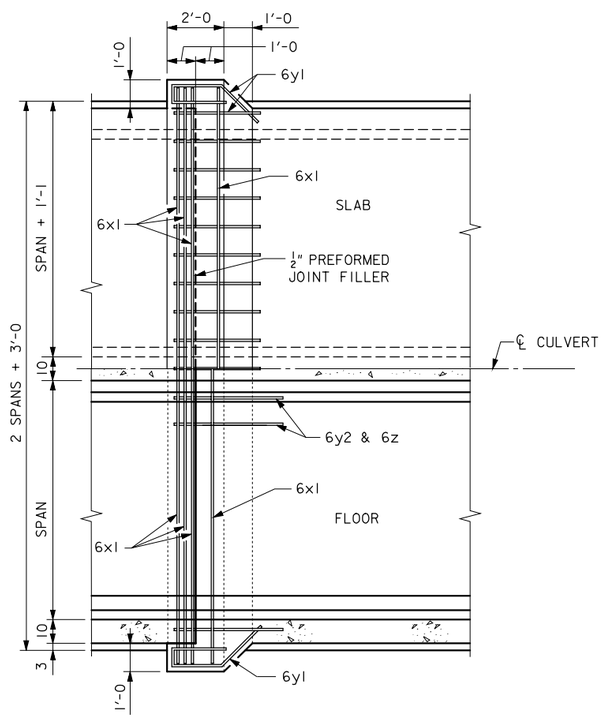

PLAN VIEW

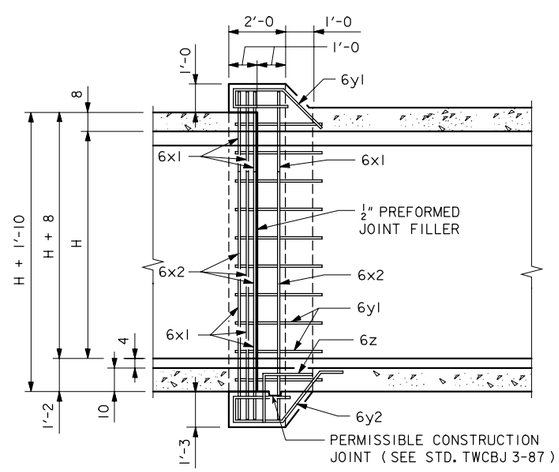

LONGITUDINAL SECTION

BENT BAR DETAILS

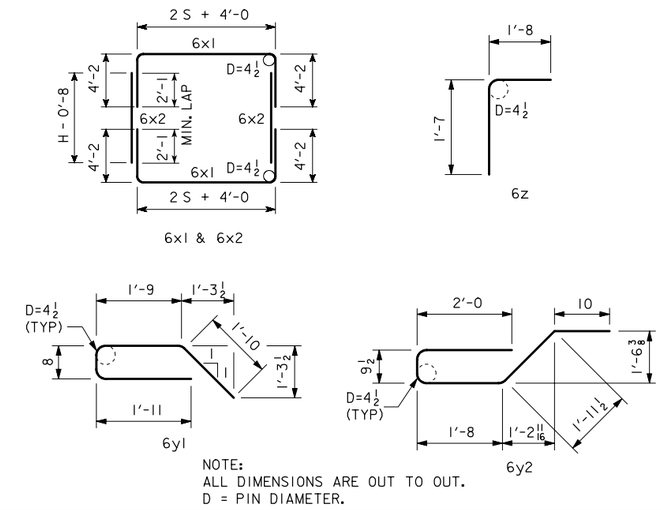

NOTES:

1. DIMENSIONS AND QUANTITIES SHOWN BASED ON SLAB THICKNESS OF 8″, WALL = 10″, AND FLOOR = 10″.
2. CHANGE LENGTHS OF BARS 6x1, 6z, AND ADJUST REINFORCING STEEL AND CONCRETE QUANTITIES ACCORDINGLY FOR SLAB, WALL, AND FLOOR THICKNESSES OTHER THAN SHOWN.
3. ALL BAR LENGTHS ARE ESTIMATED WITH A 2″ CLEARANCE FROM CONCRETE EDGE TO OUTSIDE OF BAR, EXCEPT AS NOTED.
4. MATERIAL AND CONSTRUCTION TO BE IN ACCORDANCE WITH THE CURRENT STANDARD SPECIFICATIONS OF I.D.O.T.
5. SEE DRAWING TWRCB-GI-87 FOR GENERAL INFORMATION, SPECIFICATIONS, AND DESIGN STRESSES.
6. BARS 6x1 MAY BE FURNISHED IN TWO EQUAL LENGTHS ADDING 2′-0 TO THE OVERALL LENGTH TO OBTAIN A 2′-0 MIN. LAP. THE ABOVE IS TO BE PERFORMED AT NO ADDITIONAL COST TO THE CONTRACTING AUTHORITY.
7. BARREL FLOOR BARS m1 ARE TO BE SHORTENED 6″ AT BELL JOINTS.

LATEST REVISION DATE : 04-07

APPROVED BY :

STANDARD DESIGN

CULVERT BELL JOINTS

FOR
TWIN REINFORCED CONCRETE BOX CULVERTS

8′ SPAN

IOWA DEPARTMENT OF TRANSPORTATION - HIGHWAY DIVISION

JULY , 1987

TWCBJ 1-87

REVISED 04-07 - ADDED BAR SIZE TO BAR LABEL IN BAR LIST AND SHOWED BAR WEIGHTS PER BAR LABEL. 6x BAR LENGTHS CHANGED.
TWCBJ 1-87

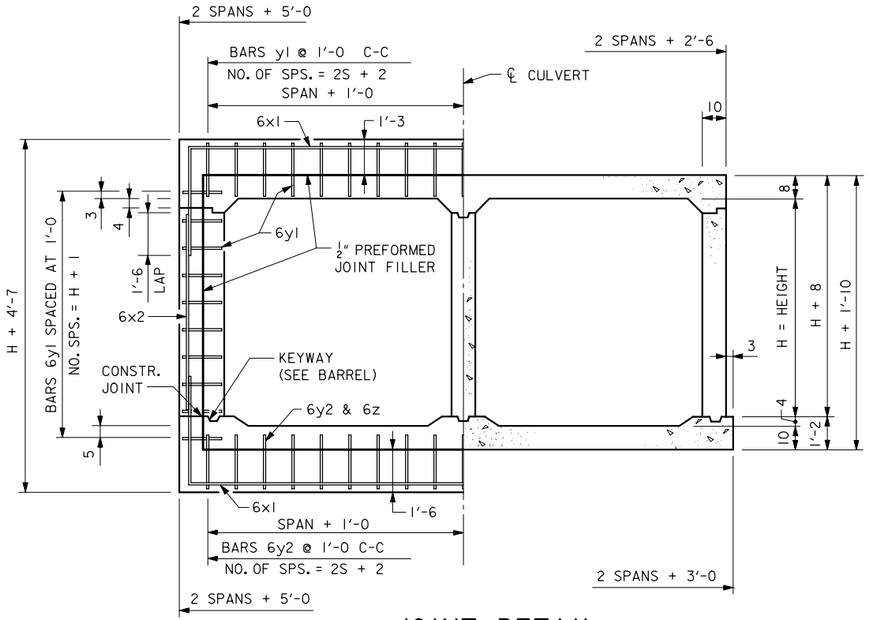

JOINT DETAIL
SECTION THRU BARREL

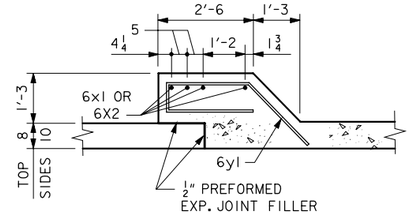

TOP & SIDES - BARS 6y1

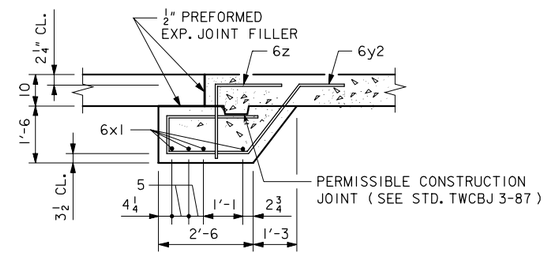

BOTTOM BARS - 6y2 & 6z

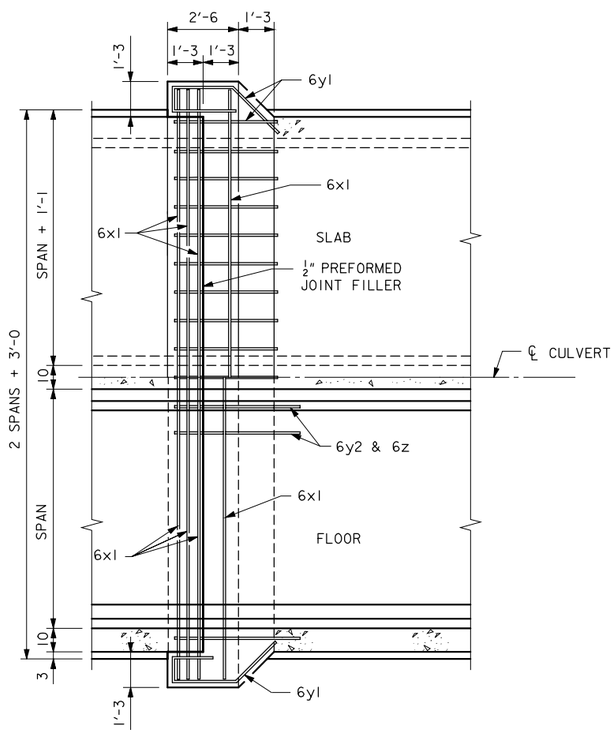

PLAN VIEW

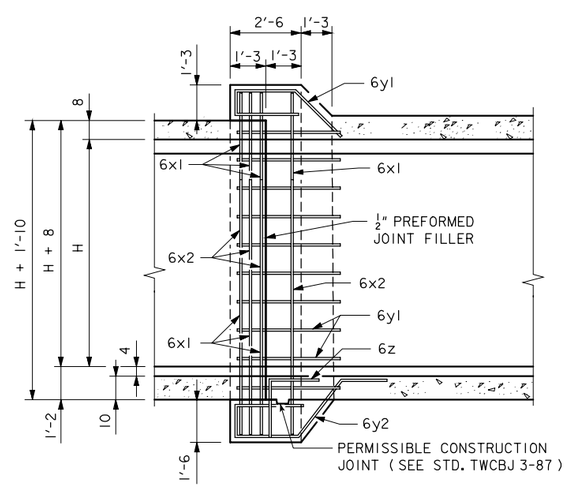

LONGITUDINAL SECTION

ESTIMATE OF QUANTITIES - ONE JOINT - 10' SPAN

BILL OF REINFORCING STEEL			10' x 6'			10' x 8'			10' x 10'			10' x 12'	
MARK	LOCATION	SHAPE	NO.	LENGTH	WEIGHT	NO.	LENGTH	WEIGHT	NO.	LENGTH	WEIGHT	NO.	LENGTH	WEIGHT
6x1	SLAB AND FLOOR		8	33'-4	401	8	33'-4	401	8	33'-4	401	8	33'-4	401
6x2	WALLS		8	5'-4	64	8	7'-4	88	8	9'-4	112	8	11'-4	136
6y1	TOP AND SIDES		39	8'-0	469	43	8'-0	517	47	8'-0	565	51	8'-0	613
6y2	BOTTOM		23	9'-0	311	23	9'-0	311	23	9'-0	311	23	9'-0	311
6z	BOTTOM & FLOOR		23	3'-8	127	23	3'-8	127	23	3'-8	127	23	3'-8	127
TOTAL WEIGHT					1372			1444			1516			1588
TOTAL CONCRETE				10.3	cu. yds.		10.8	cu. yds.		11.4	cu. yds.		12.0	cu. yds.

ESTIMATE OF QUANTITIES - ONE JOINT - 12' SPAN

BILL OF REINFORCING STEEL			12' x 6'			12' x 8'			12' x 10'			12' x 12'	
MARK	LOCATION	SHAPE	NO.	LENGTH	WEIGHT	NO.	LENGTH	WEIGHT	NO.	LENGTH	WEIGHT	NO.	LENGTH	WEIGHT
6x1	SLAB AND FLOOR		8	37'-4	449	8	37'-4	449	4	37'-4	449	8	37'-4	449
6x2	WALLS		8	5'-4	64	8	7'-4	88	8	9'-4	112	8	11'-4	136
6y1	TOP AND SIDES		43	8'-0	517	47	8'-0	565	51	8'-0	613	55	8'-0	661
6y2	BOTTOM		27	9'-0	365	27	9'-0	365	27	9'-0	365	27	9'-0	365
6z	BOTTOM & FLOOR		27	3'-8	149	27	3'-8	149	27	3'-8	149	27	3'-8	149
TOTAL WEIGHT					1544			1616			1688			1760
TOTAL CONCRETE				11.5	cu. yds.		12.1	cu. yds.		12.7	cu. yds.		13.3	cu. yds.

CONCRETE PLACEMENT

SIZE	FOOTING	WALLS	SLAB
10' X 6'	4.727	1.640	3.883
10' X 8'	4.727	2.218	3.883
10' X 10'	4.727	2.797	3.883
10' X 12'	4.727	3.376	3.883
12' X 6'	5.422	1.640	4.461
12' X 8'	5.422	2.218	4.461
12' X 10'	5.422	2.797	4.461
12' X 12'	5.422	3.376	4.461

BENT BAR DETAILS

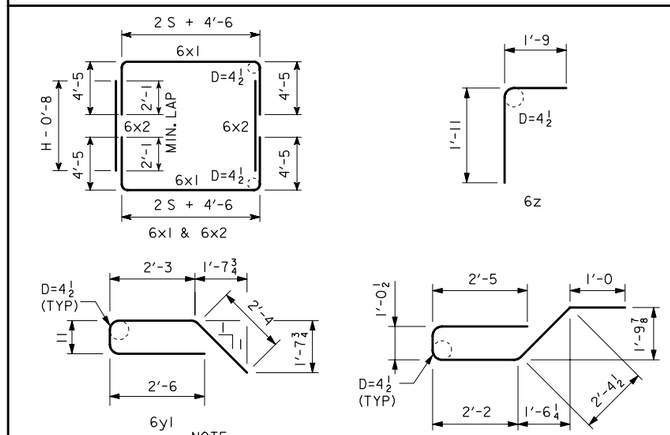

NOTE:
ALL DIMENSIONS ARE OUT TO OUT.
D = PIN DIAMETER.

NOTES:

1. DIMENSIONS AND QUANTITIES SHOWN BASED ON SLAB THICKNESS OF 8", WALL = 10", AND FLOOR = 10".
2. CHANGE LENGTHS OF BARS 6x1, 6z, AND ADJUST REINFORCING STEEL AND CONCRETE QUANTITIES ACCORDINGLY FOR SLAB, WALL, AND FLOOR THICKNESSES OTHER THAN SHOWN.
3. ALL BAR LENGTHS ARE ESTIMATED WITH A 2" CLEARANCE FROM CONCRETE EDGE TO OUTSIDE OF BAR, EXCEPT AS NOTED.
4. MATERIAL AND CONSTRUCTION TO BE IN ACCORDANCE WITH THE CURRENT STANDARD SPECIFICATIONS OF I.D.O.T.
5. SEE DRAWING TWRCB-GI-87 FOR GENERAL INFORMATION, SPECIFICATIONS, AND DESIGN STRESSES.
6. BARS 6x1 MAY BE FURNISHED IN TWO EQUAL LENGTHS ADDING 2'-0 TO THE OVERALL LENGTH TO OBTAIN A 2'-0 MIN. LAP. THE ABOVE IS TO BE PERFORMED AT NO ADDITIONAL COST TO THE CONTRACTING AUTHORITY.
7. BARREL FLOOR BARS m1 ARE TO BE SHORTENED 6" AT BELL JOINTS.

LATEST REVISION DATE : 04-07

APPROVED BY :

STANDARD DESIGN

CULVERT BELL JOINTS

FOR
TWIN REINFORCED CONCRETE BOX CULVERTS

10' AND 12' SPANS

IOWA DEPARTMENT OF TRANSPORTATION - HIGHWAY DIVISION

JULY , 1987

TWCBJ 2-87

REVISED 04-07 - ADDED BAR SIZE TO BAR LABEL IN BAR LIST AND SHOWED BAR WEIGHTS PER BAR LABEL. 6x BAR LENGTHS CHANGED.
TWCBJ 2-87

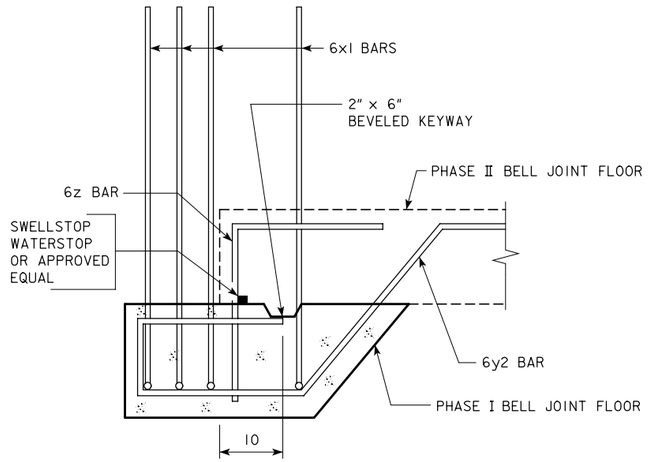

SECTION A-A

BELL JOINT AT FLOOR

COST FOR WATERSTOP CONSIDERED INCIDENTAL TO THE PROJECT.

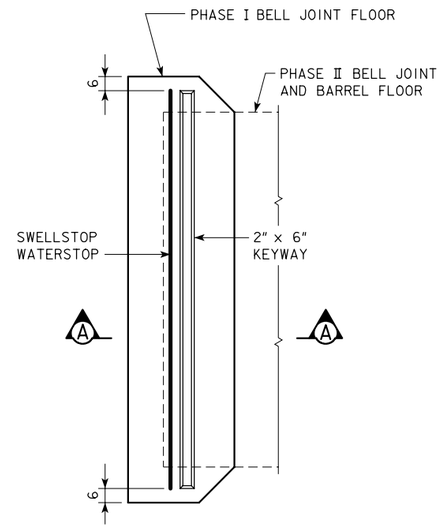

PLAN VIEW - PHASE I

(SHOWING PHASE I OF FLOOR BELL JOINT CONSTRUCTION)

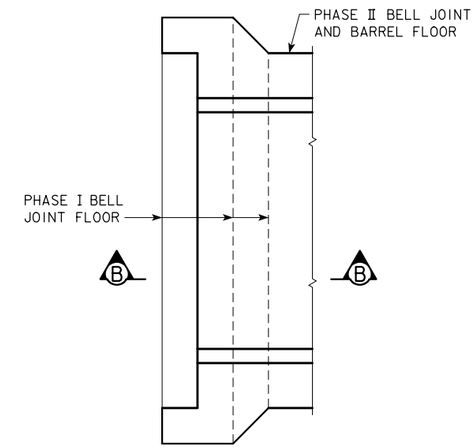

PLAN VIEW - PHASE II

(SHOWING PHASE II OF FLOOR BELL JOINT
AND BARREL FLOOR CONSTRUCTION)

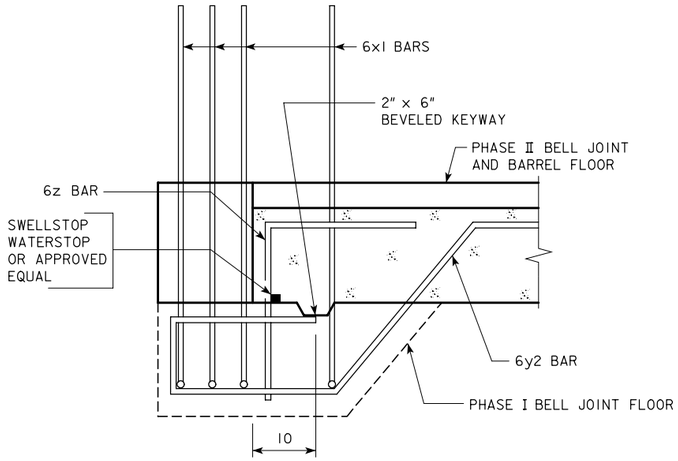

SECTION B-B

BELL JOINT AT FLOOR

COST FOR WATERSTOP CONSIDERED INCIDENTAL TO THE PROJECT.

NOTES:

THE DETAILS SHOWN ON THIS SHEET ARE AN OPTION FOR THE CONTRACTOR TO CONSTRUCT THE FLOOR OF THE BELL JOINT WITH A PERMISSIBLE CONSTRUCTION JOINT AS SHOWN.

REINFORCING STEEL WILL BE PLACED PRIOR TO PLACING THE PHASE I CONCRETE.

THE COST OF THE WATERSTOP IS CONSIDERED INCIDENTAL TO THE PROJECT.

A 2" x 6" BEVELED KEYWAY WILL BE FORMED TO THE DISTANCE SHOWN AND LOCATION NOTED BEFORE PLACING THE CONCRETE.

FOR DETAILS AND DIMENSIONS OF THE BELL JOINT REFER TO THE BELL JOINT STANDARD SHEETS.

LATEST REVISION DATE :

APPROVED BY :

STANDARD DESIGN

PERMISSIBLE CULVERT BELL JOINT

FOR

TWIN REINFORCED CONCRETE BOX CULVERTS

ALL SPANS

IOWA DEPARTMENT OF TRANSPORTATION - HIGHWAY DIVISION

APRIL, 2002

TWCBJ 3-87

TWCBJ 3-87 - 04-02 THIS SHEET ISSUED.