Iowa Department of Transportation

Highway Division

TRIPLE REINFORCED CONCRETE BOX CULVERT STANDARDS

GENERAL NOTES:

1. THE RCB CULVERT SECTIONS ARE DESIGNED FOR HS20-44 LIVE LOAD AND EARTH FILLS OF VARYING HEIGHTS.
2. THE MAXIMUM SERVICE LOAD STRESS (ksi) IN THE REINFORCING STEEL FOR CRACK CONTROL SHALL BE:
   $f_{sa} = 170 / \sqrt[3]{d_c A}$
   d_c AND A ARE IN INCHES AND INCHES^2 RESPECTIVELY
3. METAL BAR CHAIRS SPACED AT NOT OVER 3'-0 C-C IN EITHER DIRECTION ARE TO BE USED TO SUPPORT ALL SLAB AND FLOOR STEEL AS OUTLINED IN THE STANDARD SPECIFICATIONS (ARTICLE 2404.07).
4. THE CLEAR DISTANCE FROM FACE OF CONCRETE TO NEAR EDGE OR END OF REINFORCING BAR TO BE 2" UNLESS OTHERWISE NOTED.
5. LONGITUDINAL REINFORCING IS NOT TO EXTEND THRU THE CONSTRUCTION JOINTS, EXCEPT FOR 5r1 DOWEL BARS IN SLAB.
6. ALL REINFORCING STEEL IS TO BE SECURELY WIRED IN PLACE BEFORE THE CONCRETE IS POURED ACCORDING TO ARTICLE 2404.03, D, OF THE STANDARD SPECIFICATIONS.
7. FLOOR OF BARREL IS TO BE FINISHED SMOOTH. SIDES OF FOOTING ARE TO BE FORMED TO INSURE CORRECT LINE AND GRADE.
8. ALL EXPOSED CORNERS 90° OR SHARPER TO BE FILLETED WITH A $\frac{3}{4}$" DRESSED AND BEVELED STRIP.
9. THE PERMISSIBLE CONSTRUCTION JOINT AT THE TOP OF THE WALLS MAY BE LOWERED AT THE CONTRACTOR'S OPTION WITH ENGINEERS APPROVAL.
10. THE REINFORCEMENT SUPPLIED FOR THIS STRUCTURE SHALL BE GRADE 60 REINFORCEMENT IN ACCORDANCE WITH THE STANDARD SPECIFICATIONS. THE DESIGN STRESSES ARE BASED ON 60 GRADE REINFORCEMENT.
11. THE VERTICAL BARS IN THE WALLS MAY BE SPLICED ABOVE THE FOOTING AT THE CONTRACTOR'S OPTION AS FOLLOWS:

BAR SIZE NUMBER	4	5	6	7	8
MINIMUM SPLICE LENGTH	21"	26"	31"	43"	55"

THIS SPLICE, IF USED WILL BE AT THE CONTRACTOR'S EXPENSE.

12. REINFORCING BAR CLEARANCES WILL BE AS FOLLOWS:
    EDGE CLEARANCES: 2" EXCEPT
    TOP OF FLOOR $2\frac{1}{4}$" TO NEAR TRANSV. REINF. BAR
    BOTTOM OF FLOOR $3\frac{1}{2}$" TO NEAR TRANSV. REINF. BAR
    END CLEARANCES:
    VERTICAL TOP 2"
    VERTICAL BOTTOM 3" OR $3\frac{1}{2}$" IF OVERALL HEIGHT OF THE CULVERT IN NOT TO A FULL INCH
    TRANSVERSE 2"
13. ALL CONSTRUCTION JOINTS SHALL BE FORMED WITH A BEVELED KEYWAY EXCEPT AT BELL JOINTS.

    KEYWAY DIMENSIONS SHOWN ON THE PLANS ARE BASED ON NOMINAL DIMENSIONS UNLESS STATED OTHERWISE. IN ADDITION, THE BEVEL USED ON THE KEYWAY SHALL BE LIMITED TO A MAXIMUM OF 10 DEGREES FROM VERTICAL.

    ALL BEVELED KEYWAYS SHALL BE CENTERED.

    KEYWAY SIZE SHALL BE 2x4 EXCEPT AS FOLLOWS :
    KEYWAY BETWEEN THE FLOOR AND WALL SHALL BE 2x6 WHEN THE WALL IS GREATER THAN 10 INCHES WIDE.
14. IF 0 FT. OF FILL IS SPECIFIED, DETAILS FOR PAVING NOTCH AND REFERENCE TO EPOXY COATING OF SLAB REINFORCING STEEL, IF APPLICABLE, SHALL BE INCLUDED IN THE FINAL PLANS.
15. ALL DIMENSIONS ARE IN FEET AND INCHES UNLESS OTHERWISE NOTED OR SHOWN.

INDEX FOR CULVERT STANDARDS

TRRCB 10-6-01	CULVERT BARREL DETAILS - 10' x 6' VARIABLE DIMENSIONS AND QUANTITIES TABLE
TRRCB 10-8-01	CULVERT BARREL DETAILS - 10' x 8' VARIABLE DIMENSIONS AND QUANTITIES TABLE
TRRCB 10-10-01	CULVERT BARREL DETAILS - 10' x 10' VARIABLE DIMENSIONS AND QUANTITIES TABLE
TRRCB 10-12-01	CULVERT BARREL DETAILS - 10' x 12' VARIABLE DIMENSIONS AND QUANTITIES TABLE
TRRCB 12-6-01	CULVERT BARREL DETAILS - 12' x 6' VARIABLE DIMENSIONS AND QUANTITIES TABLE
TRRCB 12-8-01	CULVERT BARREL DETAILS - 12' x 8' VARIABLE DIMENSIONS AND QUANTITIES TABLE
TRRCB 12-10-01	CULVERT BARREL DETAILS - 12' x 10' VARIABLE DIMENSIONS AND QUANTITIES TABLE
TRRCB 12-12-01	CULVERT BARREL DETAILS - 12' x 12' VARIABLE DIMENSIONS AND QUANTITIES TABLE
TRRCB 2-01	CULVERT BARREL DETAILS - PLAN
TRH 0-1-01	DIMENSION TABLE - 0° SKEW
TRH 0-2-01	PLAN VIEW - APRON REINFORCING, TOP AND BOTTOM
TRH 0-3-01	TYPICAL SECTION - NEAR CENTER OF APRON, CURTAIN WALL PLAN AND SECTION AND DETAILS
TRH 0-4-01	TYPICAL VIEW - FRONT AND BACK FACE REINFORCING, WINGWALLS, CENTER WALLS
TRH 0-5-01	BENT BAR DETAILS AND BILL OF REINFORCING FOR ONE HEADWALL 0° SKEW, 10'-0 AND 12'-0 SPANS
TRH 15-1-01	DIMENSION TABLE - 15° SKEW
TRH 15-2-01	PLAN VIEW - APRON REINFORCING, TOP AND BOTTOM
TRH 15-3-01	TYPICAL SECTION - NEAR CENTER OF APRON, CURTAIN WALL PLAN AND SECTION AND DETAILS
TRH 15-4-01	TYPICAL VIEW - FRONT AND BACK FACE REINFORCING, WINGWALLS, CENTER WALL
TRH 15-5-01	BENT BAR DETAILS AND BILL OF REINFORCING FOR ONE HEADWALL 15° SKEW, 10'-0 AND 12'-0 SPANS
TRH 30-1-01	DIMENSION TABLE - 30° SKEW
TRH 30-2-01	PLAN VIEW - APRON REINFORCING, TOP AND BOTTOM
TRH 30-3-01	TYPICAL SECTION - NEAR CENTER OF APRON, CURTAIN WALL PLAN AND SECTION AND DETAILS
TRH 30-4-01	TYPICAL VIEW - FRONT AND BACK FACE REINFORCING, WINGWALLS, CENTER WALL
TRH 30-5-01	BENT BAR DETAILS AND BILL OF REINFORCING FOR ONE HEADWALL 30° SKEW, 10'-0 AND 12'-0 SPANS
TRH 45-1-01	DIMENSION TABLE - 45° SKEW
TRH 45-2-01	PLAN VIEW - TOP APRON REINFORCING
TRH 45-3-01	PLAN VIEW - BOTTOM APRON REINFORCING
TRH 45-4-01	TYPICAL SECTION - NEAR CENTER OF APRON, CURTAIN WALL PLAN AND SECTION AND DETAILS
TRH 45-5-01	TYPICAL VIEW - FRONT AND BACK FACE REINFORCING, WINGWALLS, CENTER WALLS
TRH 45-6-01	BENT BAR DETAILS AND BILL OF REINFORCING FOR ONE HEADWALL 45° SKEW, 10'-0 AND 12'-0 SPANS
TRCBJ 1-01	CULVERT BELL JOINT DETAILS AND ESTIMATE OF QUANTITIES TABLE - 10'-0 SPAN
TRCBJ 2-01	CULVERT BELL JOINT DETAILS AND ESTIMATE OF QUANTITIES TABLE - 12'-0 SPAN
TRCBJ 3-01	PERMISSIBLE CULVERT BELL JOINT DETAILS

SPECIFICATIONS:

DESIGN: AASHTO SERIES OF 1992, EXCEPT AS MODIFIED IN GENERAL NOTES 2 ABOVE.
CONSTRUCTION: STANDARD SPECIFICATIONS OF THE IOWA DEPARTMENT OF TRANSPORTATION SPECIFICATION, CURRENT SERIES, PLUS CURRENT SUPPLEMENTAL SPECIFICATIONS AND SPECIAL PROVISIONS.

DESIGN STRESSES:

DESIGN STRESSES FOR THE FOLLOWING MATERIALS ARE IN ACCORDANCE WITH THE AASHTO STANDARD SPECIFICATIONS FOR HIGHWAY BRIDGES, SERIES OF 1992.
REINFORCING STEEL IN ACCORDANCE WITH SECTION 8, GRADE 60.
CONCRETE IN ACCORDANCE WITH SECTION 8, f'c = 3,500 PSI.

LATEST REVISION DATE : 08-10

APPROVED BY :

STANDARD DESIGN

GENERAL INFORMATION

FOR

TRIPLE REINFORCED CONCRETE BOX CULVERTS

IOWA DEPARTMENT OF TRANSPORTATION - HIGHWAY DIVISION

SEPT., 2001

TRRCB-GI-01

CORRECTION 08-10 - ARTICLE 2404.06 CHANGED TO 2404.03, D IN GENERAL NOTES.
ENGLISHSIGNEDTRIPLECULVERTS.DGN - TRRCB-GI-01 - 09-01 THIS SHEET ISSUED.

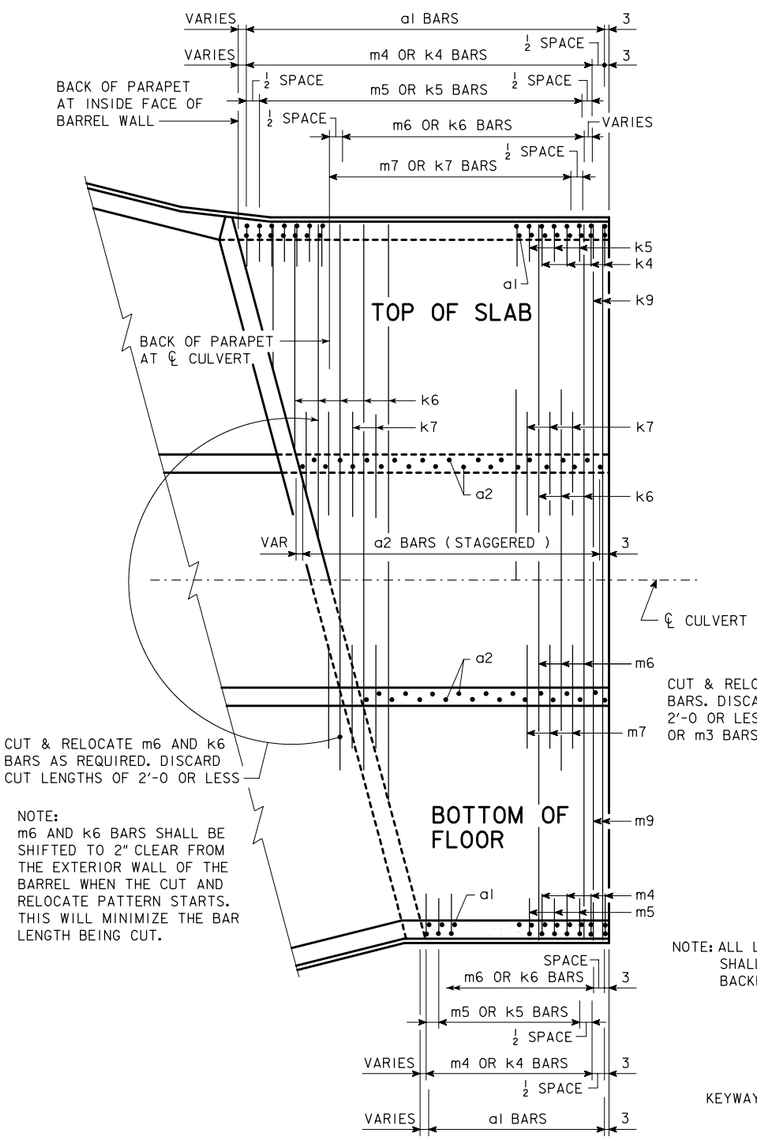

NOTE:
m6 AND k6 BARS SHALL BE SHIFTED TO 2" CLEAR FROM THE EXTERIOR WALL OF THE BARREL WHEN THE CUT AND RELOCATE PATTERN STARTS. THIS WILL MINIMIZE THE BAR LENGTH BEING CUT.

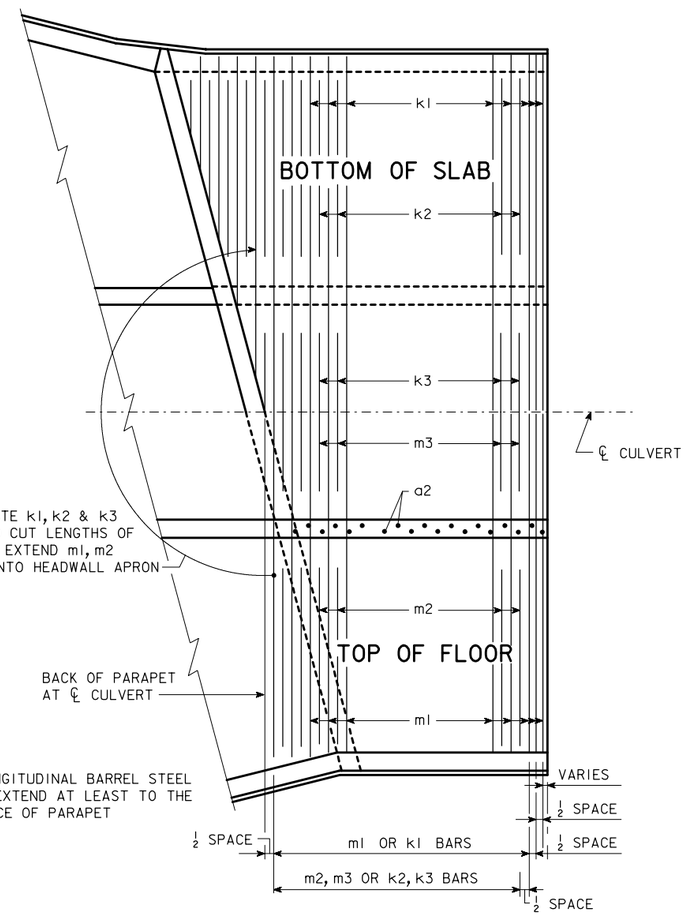

NOTE: ALL LONGITUDINAL BARREL STEEL SHALL EXTEND AT LEAST TO THE BACKFACE OF PARAPET

KEYWAYS NOT SHOWN

END SECTION - PLAN VIEWS

NOTE: END SECTION DETAILS SHOWN ARE FOR A 15° SKEW BARREL. USE FOR SKEWS OF 30° & 45° BY INCREASING THE NUMBER OF TRANSVERSE REINFORCING BARS REQUIRED TO BE CUT AND RELOCATED.

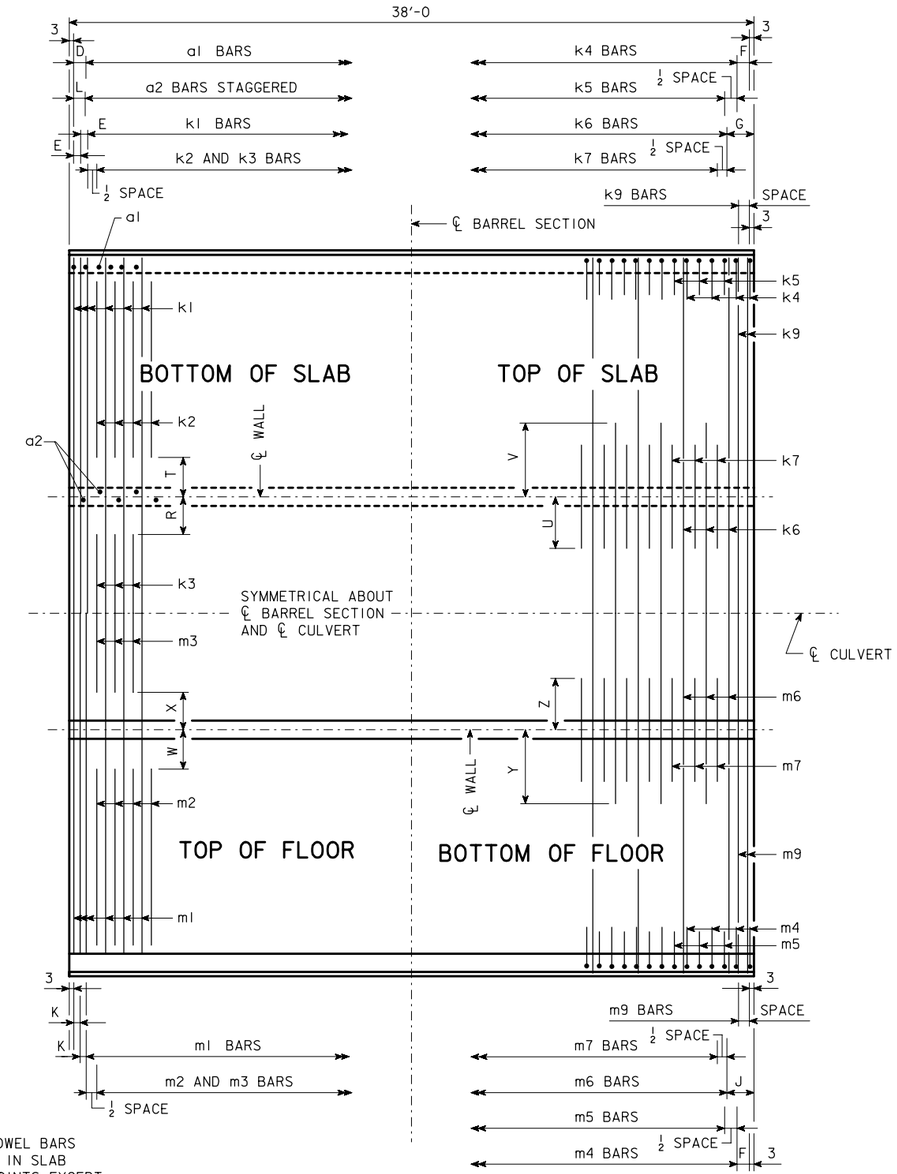

STANDARD SECTION PLAN VIEW

NOTE: TYPICAL FOR LENGTHS OF 38'-0. (KEYWAY IS TO BE OMITTED WHEN BELL JOINTS ARE USED).

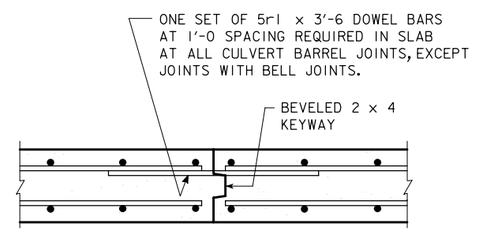

BARREL SPAN	# BARS	WEIGHT (LBS)
3 x 12'-0	40	146
3 x 10'-0	34	124

TOP SLAB CONSTRUCTION JOINT DETAIL

(VALUES SHOWN FOR ONE JOINT)

NOTE: DIMENSIONS LISTED ON THIS SHEET TO BE USED IN CONJUNCTION WITH DIMENSIONS AND QUANTITIES FOR BARREL SECTION SHEETS.

LATEST REVISION DATE :

APPROVED BY :

STANDARD DESIGN

CULVERT BARREL (PLAN) DETAILS

FOR

TRIPLE REINFORCED CONCRETE BOX CULVERTS

IOWA DEPARTMENT OF TRANSPORTATION - HIGHWAY DIVISION

SEPT., 2001

TRRCB 2-01

TRRCB 2-01 - 09-01 THIS SHEET ISSUED.

VARIABLE DIMENSIONS AND QUANTITIES FOR TRIPLE 10 x 6 BARREL SECTIONS

REINFORCING BAR LIST

FILL	a1			a2			4b1			4b2			5e1			4e2			5e3			4e4			4f1			4f2			4f3			4f4			k1			k2			k3			k4					k5				
	SIZE	SP	LENGTH	SIZE	SP	LENGTH	SIZE	SP	NO.	SIZE	SP	NO.	SIZE	SP	NO.	SIZE	SP	NO.	SIZE	SP	NO.	SIZE	SP	NO.	SIZE	SP	NO.	SIZE	SP	NO.	SIZE	SP	NO.	SIZE	SP	NO.	SIZE	SP	LENGTH	SIZE	SP	LENGTH	SIZE	SP	LENGTH	SIZE	SP	LENGTH	h	v	SIZE	SP	LENGTH	h	v
0	4	12	7'-8	5	4.5	7'-8	4	9	16	4	9	18	5	12	18	4	18	16	5	12	9	4	18	8	4	12	22	4	18	16	4	12	11	4	18	8	5	12	32'-8	5	12	8'-8	5	12	7'-6	5	12	4'-3	2'-0	2'-3	5	12	3'-11	1'-8	2'-3
1	4	12	7'-8	5	4.5	7'-8	4	9	16	4	9	18	5	12	18	4	18	16	5	12	9	4	18	8	4	12	22	4	18	16	4	12	11	4	18	8	5	12	32'-8	5	12	8'-5	5	12	7'-4	5	12	4'-3	2'-0	2'-3	5	12	3'-11	1'-8	2'-3
2	5	12	7'-6	5	4.5	7'-6	4	9	16	4	9	18	5	12	18	4	18	16	5	12	9	4	18	8	4	12	22	4	18	16	4	12	11	4	18	8	5	12	32'-8	6	12	8'-4	5	12	7'-0	5	12	4'-5	2'-2	2'-3	5	12	4'-0	1'-9	2'-3
3-6	4	9	7'-5	5	4.5	7'-5	4	9	16	4	9	18	5	12	18	4	18	16	5	12	9	4	18	8	4	12	22	4	18	16	4	12	11	4	18	8	4	12	32'-8	5	12	7'-7	5	12	7'-1	4	9	4'-6	2'-3	2'-3	4	9	4'-0	1'-9	2'-3
7-8	4	12	7'-5	4	4.5	7'-5	4	9	16	4	9	18	5	12	18	4	18	16	5	12	9	4	18	8	4	12	22	4	18	16	4	12	11	4	18	8	4	9	32'-8	4	9	6'-2	4	9	4'-8	5	12	4'-5	2'-2	2'-3	5	12	4'-0	1'-9	2'-3
9-10	4	9	7'-5	4	4.5	7'-5	4	9	16	4	9	18	5	12	18	4	18	16	5	12	9	4	18	8	4	12	22	4	18	16	4	12	11	4	18	8	5	12	32'-8	5	12	6'-5	4	12	4'-11	4	9	4'-7	1'-11	2'-8	5	9	4'-8	2'-0	2'-8
11-12	4	9	7'-7	4	4.5	7'-7	4	9	16	4	9	18	5	12	18	4	18	16	5	12	9	4	18	8	4	12	22	4	18	16	4	12	11	4	18	8	4	9	32'-8	5	9	7'-2	4	9	5'-4	4	9	4'-7	1'-11	2'-8	5	9	4'-8	2'-0	2'-8
13-15	4	9	7'-9	4	4.5	7'-9	4	9	16	4	9	18	5	12	18	4	18	16	5	12	9	4	18	8	4	12	22	4	18	16	4	12	11	4	18	8	6	15	32'-8	6	15	7'-1	4	15	4'-4	4	9	4'-10	2'-2	2'-8	5	9	4'-7	1'-11	2'-8
16-17	4	9	7'-11	4	4.5	7'-11	4	9	16	4	9	18	5	12	18	4	18	16	5	12	9	4	18	8	4	12	22	4	18	16	4	12	11	4	18	8	5	12	32'-8	6	12	7'-7	4	12	4'-10	4	9	5'-5	2'-9	2'-8	5	9	4'-7	1'-11	2'-8
18-19	6	9	8'-1	4	4.5	8'-1	4	9	16	4	9	18	5	12	18	4	18	16	5	12	9	4	18	8	4	12	22	4	18	16	4	12	11	4	18	8	5	12	32'-8	6	12	7'-8	4	12	4'-1	4	9	5'-1	2'-10	2'-3	4	9	3'-10	1'-7	2'-3
20-21	6	9	8'-2	4	4.5	8'-2	4	9	16	4	9	18	5	12	18	4	18	16	5	12	9	4	18	8	4	12	22	4	18	16	4	12	11	4	18	8	7	18	32'-8	7	18	7'-7	4	18	4'-0	4	9	5'-1	2'-10	2'-3	4	9	3'-10	1'-7	2'-3
22-23	6	9	8'-5	4	4.5	8'-5	4	9	16	4	9	18	5	12	18	4	18	16	5	12	9	4	18	8	4	12	22	4	18	16	4	12	11	4	18	8	5	12	32'-8	6	12	7'-10	4	12	4'-5	4	9	5'-3	3'-0	2'-3	4	9	3'-10	1'-7	2'-3
24-25	6	9	8'-7	4	4.5	8'-7	4	9	16	4	9	18	5	12	18	4	18	16	5	12	9	4	18	8	4	12	22	4	18	16	4	12	11	4	18	8	5	12	32'-8	6	12	8'-2	4	12	4'-7	4	9	5'-5	3'-2	2'-3	4	9	4'-3	2'-0	2'-3

REINFORCING BAR LIST

FILL	k6			k7			k9			m1			m2			m3			m4					m5					m6			m7			m9		
	SIZE	SP	LENGTH	SIZE	SP	LENGTH	SIZE	SP	LENGTH	SIZE	SP	LENGTH	SIZE	SP	LENGTH	SIZE	SP	LENGTH	SIZE	SP	LENGTH	h	v	SIZE	SP	LENGTH	h	v	SIZE	SP	LENGTH	SIZE	SP	LENGTH	SIZE	SP	LENGTH
0	4	12	29'-8	4	12	5'-0	4	4.5	32'-8	4	12	33'-2	5	12	6'-11	4	12	6'-0	5	12	9'-2	2'-0	7'-2	5	12	8'-9	1'-7	7'-2	5	12	33'-2	5	12	3'-7	5	4.5	33'-2
1	4	12	27'-7	4	12	4'-10	4	4.5	32'-8	4	12	33'-2	5	12	7'-0	4	12	6'-0	5	12	9'-1	1'-11	7'-2	5	12	8'-9	1'-7	7'-2	5	12	25'-9	5	12	3'-10	5	4.5	33'-2
2	5	12	26'-10	5	12	4'-9	5	4.5	32'-8	5	12	33'-2	5	12	6'-5	4	12	4'-5	5	12	9'-0	2'-0	7'-0	5	12	8'-7	1'-7	7'-0	5	12	25'-10	6	12	4'-7	5	4.5	33'-2
3-6	4	9	25'-6	4	9	4'-3	4	4.5	32'-8	4	12	33'-2	5	12	7'-0	4	12	5'-11	4	9	8'-9	1'-10	6'-11	4	9	8'-6	1'-7	6'-11	5	12	25'-5	5	12	3'-10	5	4.5	33'-2
7-8	4	9	25'-0	5	9	4'-8	4	4.5	32'-8	5	12	33'-2	5	12	6'-5	4	12	4'-11	5	12	9'-0	2'-1	6'-11	5	12	8'-6	1'-7	6'-11	5	12	25'-4	6	12	4'-7	5	4.5	33'-2
9-10	5	9	24'-11	5	9	4'-1	5	4.5	32'-8	4	9	33'-2	5	9	6'-11	4	9	5'-3	4	9	9'-1	2'-2	6'-11	5	9	8'-9	1'-10	6'-11	6	12	25'-4	6	12	4'-3	6	4.5	33'-2
11-12	5	9	24'-11	5	9	4'-2	5	4.5	32'-8	5	12	33'-2	6	12	7'-4	4	12	4'-9	4	9	9'-3	2'-2	7'-1	5	9	8'-11	1'-10	7'-1	6	12	25'-3	6	12	4'-3	6	4.5	33'-2
13-15	6	12	25'-0	6	12	4'-5	6	4.5	32'-8	5	12	33'-2	6	12	7'-5	4	12	4'-9	4	9	9'-11	2'-8	7'-3	5	9	9'-1	1'-10	7'-3	7	15	25'-5	7	15	4'-7	7	7.5	33'-2
16-17	7	15	25'-1	7	15	4'-7	7	7.5	32'-8	5	9	33'-2	5	9	6'-10	4	9	4'-0	4	9	10'-2	2'-9	7'-5	5	9	9'-3	1'-10	7'-5	7	15	25'-4	7	15	4'-7	7	7.5	33'-2
18-19	7	15	25'-1	7	15	4'-7	7	7.5	32'-8	5	9	33'-2	5	9	6'-10	4	9	4'-0	4	9	10'-5	2'-10	7'-7	4	9	9'-2	1'-7	7'-7	7	18	25'-6	8	18	5'-3	7	4.5	33'-2
20-21	7	15	25'-1	7	15	4'-8	7	7.5	32'-8	5	9	33'-2	5	9	7'-1	—	—	—	4	9	10'-7	2'-11	7'-8	4	9	9'-3	1'-7	7'-8	7	18	25'-6	8	18	5'-3	7	4.5	33'-2
22-23	7	15	25'-1	7	15	4'-7	7	7.5	32'-8	5	9	33'-2	5	9	7'-4	—	—	—	4	9	10'-5	2'-6	7'-11	4	9	9'-6	1'-7	7'-11	6	12	25'-3	6	12	4'-6	6	4.5	33'-2
24-25	6	12	25'-0	6	12	4'-9	6	4.5	32'-8	5	9	33'-2	5	9	7'-6	—	—	—	4	9	10'-8	2'-7	8'-1	4	9	9'-8	1'-7	8'-1	6	12	25'-3	6	12	4'-8	6	4.5	33'-2

DIMENSIONS

FILL	S	H	A	B	C	*D	*E	*F	*G	*J
0	10	6	11	10	9	9	4.5	9	12	12
1	10	6	11	10.5	9	9	4.5	9	12	12
2	10	6	9	10	9	9	4.5	9	12	12
3-6	10	6	8	10	9	9	4.5	4.5	12	12
7-8	10	6	8	10	9	9	4.5	9	12	12
9-10	10	6	8	10	9	9	4.5	4.5	12	12
11-12	10	6	9	11	9	9	4.5	4.5	12	12
13-15	10	6	10	12	9	9	7.5	4.5	12	18
16-17	10	6	11	13	9	9	4.5	4.5	18	18
18-19	10	6	12	14	9	9	4.5	4.5	18	12
20-21	10	6	12.5	15	9	9	4.5	4.5	18	12
22-23	10	6	14	16	9	9	4.5	4.5	18	12
24-25	10	6	15.5	17	9	9	4.5	4.5	12	12

DIMENSIONS

FILL	*K	*L	R	T	U	V	W	X	Y	Z
0	4.5	3	1'-7	1'-6	2'-6	8'-0	2'-4	2'-4	11'-3	1'-10
1	4.5	3	1'-9	1'-8	2'-5	5'-11	2'-5	2'-4	3'-10	1'-11
2	4.5	3	1'-10	1'-7	2'-5	5'-2	2'-8	3'-2	3'-11	2'-4
3-6	4.5	3	1'-10	1'-11	2'-2	3'-10	2'-5	2'-5	3'-6	1'-11
7-8	4.5	3	3'-1	2'-9	2'-4	3'-4	2'-7	2'-11	3'-5	2'-4
9-10	4.5	3	2'-11	2'-8	2'-1	3'-3	2'-5	2'-9	3'-5	2'-2
11-12	4.5	3	2'-9	2'-4	2'-1	3'-3	2'-3	3'-0	3'-4	2'-2
13-15	4.5	3	3'-3	2'-5	2'-3	3'-4	2'-4	3'-0	3'-6	2'-4
16-17	4.5	3	3'-0	2'-3	2'-4	3'-5	2'-8	3'-5	3'-5	2'-4
18-19	4.5	3	3'-4	2'-3	2'-4	3'-5	2'-8	3'-5	3'-7	2'-8
20-21	4.5	3	3'-5	2'-4	2'-4	3'-5	2'-7	—	3'-7	2'-8
22-23	4.5	3	3'-2	2'-3	2'-4	3'-5	2'-6	—	3'-4	2'-3
24-25	4.5	3	3'-1	2'-2	2'-5	3'-4	2'-5	—	3'-4	2'-4

BENT BAR DETAILS

BARS	D
4	3
5	3¾
6	4½
7	5¼

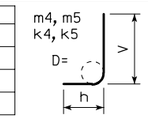

NOTE: ALL DIMENSIONS ARE OUT TO OUT D = PIN DIAMETER

* THESE DIMENSIONS ARE CORRECT FOR 38'-0 LONG STANDARD SECTIONS ONLY. DIMENSIONS MUST BE RECALCULATED FOR ALL OTHER SECTION LENGTHS.

QUANTITIES

FILL	CONCRETE			CU YD/FT	STEEL
	SLAB	FLOOR	WALL	TOTAL	LBS/FT
0	1.203	1.113	0.620	2.936	385.47
1	1.203	1.164	0.620	2.987	376.18
2	0.999	1.113	0.620	2.732	418.26
3-6	0.897	1.113	0.620	2.630	359.29
7-8	0.897	1.113	0.620	2.630	370.08
9-10	0.897	1.113	0.620	2.630	412.74
11-12	0.999	1.216	0.620	2.835	423.45
13-15	1.101	1.319	0.620	3.040	445.61
16-17	1.203	1.423	0.620	3.246	463.18
18-19	1.305	1.526	0.620	3.451	465.63
20-21	1.356	1.630	0.620	3.606	475.34
22-23	1.509	1.733	0.620	3.862	463.47
24-25	1.661	1.836	0.620	4.117	463.82

DIMENSIONS LISTED ON THIS SHEET TO BE USED IN CONJUNCTION WITH SHEET TRRCB 2-01.

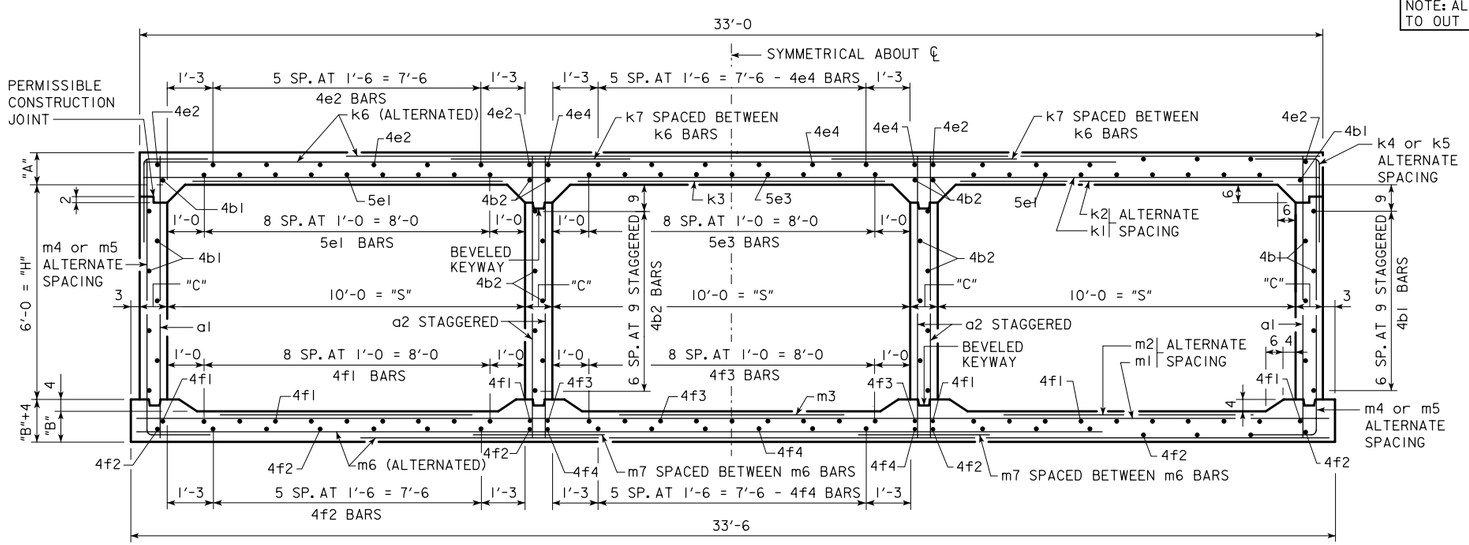

TRIPLE 10 x 6 BARREL SECTION

LATEST REVISION DATE :

APPROVED BY :

STANDARD DESIGN

CULVERT BARREL DETAILS

FOR

TRIPLE REINFORCED CONCRETE BOX CULVERTS

IOWA DEPARTMENT OF TRANSPORTATION - HIGHWAY DIVISION

SEPT., 2001

TRRCB 10-6-01

TRB 10-6-01 - 09-01 THIS SHEET ISSUED.

VARIABLE DIMENSIONS AND QUANTITIES FOR TRIPLE 10 x 8 BARREL SECTIONS

REINFORCING BAR LIST

FILL	a1			a2			4b1			4b2			5e1			4e2			5e3			4e4			4f1			4f2			4f3			4f4		
	SIZE	SP	LENGTH	SIZE	SP	LENGTH	SIZE	SP	NO.	SIZE	SP	NO.	SIZE	SP	NO.	SIZE	SP	NO.	SIZE	SP	NO.	SIZE	SP	NO.	SIZE	SP	NO.	SIZE	SP	NO.	SIZE	SP	NO.	SIZE	SP	NO.
0	4	12	9'-7	5	4.5	9'-7	4	9	22	4	9	24	5	12	18	4	18	16	5	12	9	4	18	8	4	12	22	4	18	16	4	12	11	4	18	8
1	4	12	9'-9	5	4.5	9'-9	4	9	22	4	9	24	5	12	18	4	18	16	5	12	9	4	18	8	4	12	22	4	18	16	4	12	11	4	18	8
2	4	9	9'-6	5	4.5	9'-6	4	9	22	4	9	24	5	12	18	4	18	16	5	12	9	4	18	8	4	12	22	4	18	16	4	12	11	4	18	8
3-6	4	12	9'-5	4	4.5	9'-5	4	9	22	4	9	24	5	12	18	4	18	16	5	12	9	4	18	8	4	12	22	4	18	16	4	12	11	4	18	8
7-8	5	12	9'-5	4	4.5	9'-5	4	9	22	4	9	24	5	12	18	4	18	16	5	12	9	4	18	8	4	12	22	4	18	16	4	12	11	4	18	8
9-10	4	9	9'-5	4	4.5	9'-5	4	9	22	4	9	24	5	12	18	4	18	16	5	12	9	4	18	8	4	12	22	4	18	16	4	12	11	4	18	8
11-12	6	9	9'-7	4	4.5	9'-7	4	9	22	4	9	24	5	12	18	4	18	16	5	12	9	4	18	8	4	12	22	4	18	16	4	12	11	4	18	8
13-15	4	9	9'-9	4	4.5	9'-9	4	9	22	4	9	24	5	12	18	4	18	16	5	12	9	4	18	8	4	12	22	4	18	16	4	12	11	4	18	8
16-17	4	9	9'-11	4	4.5	9'-11	4	9	22	4	9	24	5	12	18	4	18	16	5	12	9	4	18	8	4	12	22	4	18	16	4	12	11	4	18	8
18-19	4	6	10'-1	4	4.5	10'-1	4	9	22	4	9	24	5	12	18	4	18	16	5	12	9	4	18	8	4	12	22	4	18	16	4	12	11	4	18	8
20-21	4	6	10'-2	4	4.5	10'-2	4	9	22	4	9	24	5	12	18	4	18	16	5	12	9	4	18	8	4	12	22	4	18	16	4	12	11	4	18	8
22-23	4	9	10'-4	4	4.5	10'-4	4	9	22	4	9	24	5	12	18	4	18	16	5	12	9	4	18	8	4	12	22	4	18	16	4	12	11	4	18	8
24-25	4	9	10'-6	4	4.5	10'-6	4	9	22	4	9	24	5	12	18	4	18	16	5	12	9	4	18	8	4	12	22	4	18	16	4	12	11	4	18	8

FILL	k1			k2			k3			k4					k5				
	SIZE	SP	LENGTH	SIZE	SP	LENGTH	SIZE	SP	LENGTH	SIZE	SP	LENGTH	h	v	SIZE	SP	LENGTH	h	v
0	5	12	32'-8	5	12	8'-7	5	12	8'-5	5	12	4'-0	1'-9	2'-3	5	12	3'-11	1'-8	2'-3
1	5	12	32'-8	5	12	8'-5	5	12	8'-1	5	12	4'-5	2'-2	2'-3	5	12	3'-11	1'-8	2'-3
2	5	12	32'-8	6	12	8'-5	5	12	7'-1	4	9	4'-9	2'-1	2'-8	5	9	4'-8	2'-0	2'-8
3-6	4	12	32'-8	5	12	7'-2	4	12	5'-8	5	12	4'-5	2'-2	2'-3	5	12	4'-0	1'-9	2'-3
7-8	4	9	32'-8	4	9	6'-3	4	9	4'-8	5	12	4'-6	2'-3	2'-3	5	12	4'-0	1'-9	2'-3
9-10	4	9	32'-8	5	9	7'-1	4	9	5'-4	4	9	4'-7	1'-11	2'-8	5	9	4'-8	2'-0	2'-8
11-12	4	9	32'-8	5	9	7'-2	4	9	5'-4	4	9	4'-2	1'-11	2'-3	4	9	4'-0	1'-9	2'-3
13-15	6	15	32'-8	6	15	7'-1	4	15	4'-4	5	12	4'-10	2'-3	2'-7	6	12	4'-5	1'-10	2'-7
16-17	6	15	32'-8	6	15	7'-2	4	15	4'-6	5	12	4'-10	2'-3	2'-7	6	12	4'-5	1'-10	2'-7
18-19	5	12	32'-8	6	12	7'-8	4	12	4'-3	5	12	5'-5	2'-10	2'-7	6	12	4'-4	1'-9	2'-7
20-21	5	12	32'-8	6	12	7'-8	4	12	5'-0	5	12	5'-5	2'-10	2'-7	6	12	4'-4	1'-9	2'-7
22-23	5	12	32'-8	6	12	7'-9	4	12	4'-6	5	9	5'-7	2'-11	2'-8	5	9	4'-6	1'-10	2'-8
24-25	7	18	32'-8	7	18	7'-7	4	18	4'-0	5	9	5'-8	3'-0	2'-8	5	9	4'-6	1'-10	2'-8

REINFORCING BAR LIST

FILL	k6			k7			k9			m1			m2			m3		
	SIZE	SP	LENGTH	SIZE	SP	LENGTH	SIZE	SP	LENGTH	SIZE	SP	LENGTH	SIZE	SP	LENGTH	SIZE	SP	LENGTH
0	4	12	32'-8	4	12	5'-1	4	4.5	32'-8	4	12	33'-2	5	12	6'-11	4	12	6'-2
1	4	12	28'-8	4	12	4'-11	4	4.5	32'-8	4	12	33'-2	5	12	7'-1	4	12	6'-2
2	5	12	27'-4	5	12	4'-10	5	4.5	32'-8	5	12	33'-2	5	12	6'-5	4	12	4'-5
3-6	5	12	25'-2	5	12	4'-4	5	4.5	32'-8	4	9	33'-2	4	9	6'-1	4	9	4'-8
7-8	4	9	25'-0	5	9	4'-8	4	4.5	32'-8	5	12	33'-2	5	12	6'-5	4	12	4'-11
9-10	5	9	24'-11	5	9	4'-1	5	4.5	32'-8	5	12	33'-2	6	12	7'-2	4	12	4'-10
11-12	5	9	24'-11	5	9	4'-2	5	4.5	32'-8	5	12	33'-2	6	12	7'-4	4	12	4'-10
13-15	6	12	25'-0	6	12	4'-5	6	4.5	32'-8	5	9	33'-2	5	9	6'-8	4	9	4'-0
16-17	6	12	24'-11	6	12	4'-5	6	4.5	32'-8	5	9	33'-2	5	9	6'-9	4	9	4'-0
18-19	7	15	25'-1	7	15	4'-7	7	7.5	32'-8	5	9	33'-2	5	9	6'-10	4	9	4'-0
20-21	7	15	25'-1	7	15	4'-8	7	7.5	32'-8	5	9	33'-2	5	9	7'-1	4	9	4'-0
22-23	7	15	25'-1	7	15	4'-8	7	7.5	32'-8	5	9	33'-2	5	9	7'-3	4	9	4'-2
24-25	7	15	25'-1	7	15	4'-9	7	7.5	32'-8	5	9	33'-2	5	9	7'-6	4	9	4'-4

FILL	m4					m5					m6			m7			m9		
	SIZE	SP	LENGTH	h	v	SIZE	SP	LENGTH	h	v	SIZE	SP	LENGTH	SIZE	SP	LENGTH	SIZE	SP	LENGTH
0	5	12	11'-1	2'-0	9'-1	5	12	10'-8	1'-7	9'-1	5	12	33'-2	5	12	3'-7	5	4.5	33'-2
1	5	12	11'-2	1'-11	9'-3	5	12	10'-10	1'-7	9'-3	4	9	25'-7	4	9	3'-5	4	4.5	33'-2
2	4	9	10'-10	1'-10	9'-0	5	9	10'-10	1'-10	9'-0	5	12	25'-10	6	12	4'-7	5	4.5	33'-2
3-6	5	12	11'-1	2'-2	8'-11	5	12	10'-6	1'-7	8'-11	4	9	25'-2	5	9	4'-5	4	4.5	33'-2
7-8	5	12	10'-11	2'-0	8'-11	5	12	10'-6	1'-7	8'-11	5	9	25'-2	5	9	3'-11	5	4.5	33'-2
9-10	4	9	11'-1	2'-2	8'-11	5	9	10'-9	1'-10	8'-11	6	12	25'-3	6	12	4'-2	6	4.5	33'-2
11-12	4	9	11'-3	2'-2	9'-1	4	9	10'-8	1'-7	9'-1	6	12	25'-3	6	12	4'-3	6	4.5	33'-2
13-15	5	12	12'-1	2'-10	9'-3	6	12	11'-0	1'-9	9'-3	7	15	25'-4	7	15	4'-7	7	7.5	33'-2
16-17	5	12	12'-3	2'-10	9'-5	6	12	11'-2	1'-9	9'-5	7	15	25'-4	7	15	4'-7	7	7.5	33'-2
18-19	5	12	12'-5	2'-10	9'-7	6	12	11'-4	1'-9	9'-7	7	18	25'-6	8	18	5'-3	7	4.5	33'-2
20-21	5	12	12'-1	2'-5	9'-8	6	12	11'-5	1'-9	9'-8	6	12	25'-2	6	12	4'-5	6	4.5	33'-2
22-23	5	9	12'-4	2'-6	9'-10	5	9	11'-8	1'-10	9'-10	6	12	25'-3	6	12	4'-6	6	4.5	33'-2
24-25	5	9	12'-7	2'-7	10'-0	5	9	11'-10	1'-10	10'-0	6	12	25'-3	6	12	4'-8	6	4.5	33'-2

DIMENSIONS

FILL	S	H	A	B	C	*D	*E	*F	*G	*J
0	10	8	10.5	10	9	9	4.5	9	12	12
1	10	8	11	11	9	9	4.5	9	12	12
2	10	8	9	10	9	9	4.5	4.5	12	12
3-6	10	8	8	10	9	9	4.5	9	12	12
7-8	10	8	8	10	9	9	4.5	9	12	12
9-10	10	8	8	10	9	9	4.5	4.5	12	12
11-12	10	8	9	11	9	9	4.5	4.5	12	12
13-15	10	8	10	12	9	9	7.5	9	12	18
16-17	10	8	11	13	9	9	7.5	9	12	18
18-19	10	8	12	14	9	6	4.5	9	18	12
20-21	10	8	12.5	15	9	6	4.5	9	18	12
22-23	10	8	13.5	16	9	9	4.5	4.5	18	12
24-25	10	8	14.5	17	9	9	4.5	4.5	18	12

DIMENSIONS

FILL	*K	*L	R	T	U	V	W	X	Y	Z
0	4.5	3	1'-2	1'-6	2'-7	——	2'-5	2'-4	11'-3	1'-10
1	4.5	3	1'-4	1'-7	2'-6	7'-0	2'-5	2'-4	3'-8	1'-9
2	4.5	3	1'-10	1'-7	2'-5	5'-8	2'-8	3'-2	3'-11	2'-4
3-6	4.5	3	2'-7	2'-3	2'-2	3'-6	2'-10	3'-1	3'-3	2'-3
7-8	4.5	3	3'-1	2'-8	2'-4	3'-4	2'-8	2'-11	3'-3	2'-0
9-10	4.5	3	2'-8	2'-4	2'-1	3'-3	2'-3	3'-0	3'-4	2'-1
11-12	4.5	3	2'-9	2'-4	2'-1	3'-3	2'-3	3'-0	3'-4	2'-2
13-15	4.5	3	3'-3	2'-5	2'-3	3'-4	2'-8	3'-5	3'-5	2'-4
16-17	4.5	3	3'-2	2'-5	2'-3	3'-3	2'-8	3'-5	3'-5	2'-4
18-19	4.5	3	3'-3	2'-3	2'-4	3'-5	2'-8	3'-5	3'-7	2'-8
20-21	4.5	3	2'-11	2'-3	2'-4	3'-5	2'-7	3'-5	3'-3	2'-3
22-23	4.5	3	3'-2	2'-2	2'-4	3'-5	2'-6	3'-4	3'-4	2'-3
24-25	4.5	3	3'-5	2'-4	2'-5	3'-5	2'-5	3'-3	3'-4	2'-4

BENT BAR DETAILS

BARS	D
4	3
5	3¾
6	4½
7	5¼

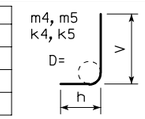

NOTE: ALL DIMENSIONS ARE OUT TO OUT D = PIN DIAMETER

* THESE DIMENSIONS ARE CORRECT FOR 38'-0 LONG STANDARD SECTIONS ONLY. DIMENSIONS MUST BE RECALCULATED FOR ALL OTHER SECTION LENGTHS.

QUANTITIES

FILL	CONCRETE CU YD/FT				STEEL
	SLAB	FLOOR	WALL	TOTAL	LBS/FT
0	1.152	1.113	0.842	3.107	416.97
1	1.203	1.216	0.842	3.261	402.11
2	0.999	1.113	0.842	2.954	455.79
3-6	0.897	1.113	0.842	2.852	379.61
7-8	0.897	1.113	0.842	2.852	408.92
9-10	0.897	1.113	0.842	2.852	448.34
11-12	0.999	1.216	0.842	3.057	455.24
13-15	1.101	1.319	0.842	3.262	488.24
16-17	1.203	1.423	0.842	3.468	490.29
18-19	1.305	1.526	0.842	3.673	507.16
20-21	1.356	1.630	0.842	3.828	504.08
22-23	1.458	1.733	0.842	4.033	509.21
24-25	1.559	1.836	0.842	4.237	523.55

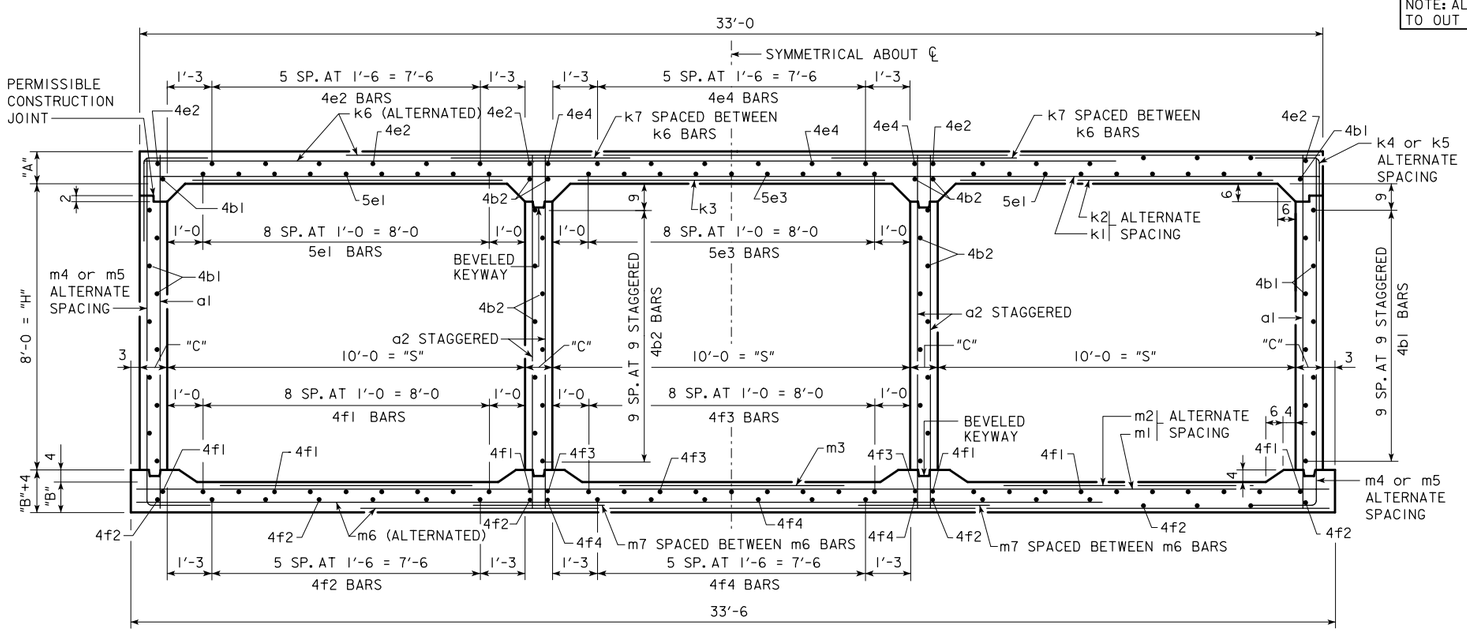

TRIPLE 10 x 8 BARREL SECTION

DIMENSIONS LISTED ON THIS SHEET TO BE USED IN CONJUNCTION WITH SHEET TRRCB 2-01.

LATEST REVISION DATE :

APPROVED BY :

STANDARD DESIGN

CULVERT BARREL DETAILS

FOR

TRIPLE REINFORCED CONCRETE BOX CULVERTS

IOWA DEPARTMENT OF TRANSPORTATION - HIGHWAY DIVISION

SEPT., 2001

TRRCB 10-8-01

TRB 10-8-01 - 09-01 THIS SHEET ISSUED.

VARIABLE DIMENSIONS AND QUANTITIES FOR TRIPLE 10 x 10 BARREL SECTIONS

REINFORCING BAR LIST

FILL	a1			a2			4b1			4b2			5e1			4e2			5e3			4e4			4f1			4f2			4f3			4f4			k1			k2			k3			k4					k5				
	SIZE	SP	LENGTH	SIZE	SP	LENGTH	SIZE	SP	NO.	SIZE	SP	NO.	SIZE	SP	NO.	SIZE	SP	NO.	SIZE	SP	NO.	SIZE	SP	NO.	SIZE	SP	NO.	SIZE	SP	NO.	SIZE	SP	NO.	SIZE	SP	NO.	SIZE	SP	LENGTH	SIZE	SP	LENGTH	SIZE	SP	LENGTH	SIZE	SP	LENGTH	h	v	SIZE	SP	LENGTH	h	v
0	5	12	11'-7	6	7.5	11'-7	4	9	28	4	9	30	5	12	18	4	18	16	5	12	9	4	18	8	4	12	22	4	18	16	4	12	11	4	18	8	5	12	33'-0	5	12	8'-7	5	12	8'-6	5	12	4'-0	1'-9	2'-3	5	12	4'-0	1'-9	2'-3
1	5	12	11'-9	6	7.5	11'-9	4	9	28	4	9	30	5	12	18	4	18	16	5	12	9	4	18	8	4	12	22	4	18	16	4	12	11	4	18	8	5	12	33'-0	5	12	8'-4	5	12	8'-2	5	12	4'-0	1'-9	2'-3	5	12	4'-0	1'-9	2'-3
2	4	9	11'-6	6	7.5	11'-6	4	9	28	4	9	30	5	12	18	4	18	16	5	12	9	4	18	8	4	12	22	4	18	16	4	12	11	4	18	8	5	12	33'-0	6	12	8'-4	6	12	7'-9	4	9	5'-1	2'-5	2'-8	5	9	4'-9	2'-1	2'-8
3-6	5	12	11'-5	5	6	11'-5	4	9	28	4	9	30	5	12	18	4	18	16	5	12	9	4	18	8	4	12	22	4	18	16	4	12	11	4	18	8	4	12	33'-0	5	12	7'-1	4	12	5'-9	5	12	4'-10	2'-7	2'-3	5	12	4'-1	1'-10	2'-3
7-8	4	9	11'-5	5	6	11'-5	4	9	28	4	9	30	5	12	18	4	18	16	5	12	9	4	18	8	4	12	22	4	18	16	4	12	11	4	18	8	4	12	33'-0	5	12	7'-0	5	12	6'-5	5	12	5'-3	2'-8	2'-7	6	12	4'-7	2'-0	2'-7
9-10	5	12	11'-5	5	6	11'-5	4	9	28	4	9	30	5	12	18	4	18	16	5	12	9	4	18	8	4	12	22	4	18	16	4	12	11	4	18	8	5	12	33'-0	5	12	6'-5	4	12	5'-0	4	9	5'-0	2'-4	2'-8	5	9	4'-9	2'-1	2'-8
11-12	6	9	11'-7	5	6	11'-7	4	9	28	4	9	30	5	12	18	4	18	16	5	12	9	4	18	8	4	12	22	4	18	16	4	12	11	4	18	8	5	12	33'-0	5	12	6'-6	4	12	5'-0	5	12	4'-7	2'-4	2'-3	5	12	4'-1	1'-10	2'-3
13-15	4	9	11'-9	5	6	11'-9	4	9	28	4	9	30	5	12	18	4	18	16	5	12	9	4	18	8	4	12	22	4	18	16	4	12	11	4	18	8	4	9	33'-0	5	9	7'-2	4	9	5'-3	5	9	4'-11	2'-3	2'-8	5	9	4'-8	2'-0	2'-8
16-17	4	6	11'-11	5	6	11'-11	4	9	28	4	9	30	5	12	18	4	18	16	5	12	9	4	18	8	4	12	22	4	18	16	4	12	11	4	18	8	4	9	33'-0	5	9	7'-3	4	9	5'-6	5	9	4'-11	2'-3	2'-8	5	9	4'-8	2'-0	2'-8
18-19	4	6	12'-0	5	6	12'-0	4	9	28	4	9	30	5	12	18	4	18	16	5	12	9	4	18	8	4	12	22	4	18	16	4	12	11	4	18	8	6	15	33'-0	6	15	7'-1	4	15	4'-8	5	9	5'-6	2'-10	2'-8	5	9	4'-7	1'-11	2'-8
20-21	7	12	12'-2	5	6	12'-2	4	9	28	4	9	30	5	12	18	4	18	16	5	12	9	4	18	8	4	12	22	4	18	16	4	12	11	4	18	8	6	15	33'-0	6	15	7'-2	4	15	4'-8	5	9	5'-6	2'-10	2'-8	5	9	4'-7	1'-11	2'-8
22-23	5	12	12'-4	5	6	12'-4	4	9	28	4	9	30	5	12	18	4	18	16	5	12	9	4	18	8	4	12	22	4	18	16	4	12	11	4	18	8	5	12	33'-0	6	12	7'-7	4	12	5'-3	5	9	6'-0	2'-11	3'-1	6	9	5'-3	2'-2	3'-1
24-25	5	12	12'-6	5	6	12'-6	4	9	28	4	9	30	5	12	18	4	18	16	5	12	9	4	18	8	4	12	22	4	18	16	4	12	11	4	18	8	5	12	33'-0	6	12	7'-10	4	12	5'-5	5	9	6'-1	3'-0	3'-1	6	9	5'-3	2'-2	3'-1

REINFORCING BAR LIST

FILL	k6			k7			k9			m1			m2			m3			m4					m5					m6			m7			m9		
	SIZE	SP	LENGTH	SIZE	SP	LENGTH	SIZE	SP	LENGTH	SIZE	SP	LENGTH	SIZE	SP	LENGTH	SIZE	SP	LENGTH	SIZE	SP	LENGTH	h	v	SIZE	SP	LENGTH	h	v	SIZE	SP	LENGTH	SIZE	SP	LENGTH	SIZE	SP	LENGTH
0	4	12	33'-0	4	12	5'-1	4	4.5	33'-0	4	12	33'-6	5	12	6'-10	4	12	6'-2	5	12	13'-0	1'-11	11'-1	5	12	12'-9	1'-8	11'-1	5	12	33'-6	5	12	3'-7	5	4.5	33'-6
1	4	12	33'-0	4	12	5'-0	4	4.5	33'-0	4	12	33'-6	5	12	7'-0	4	12	6'-3	5	12	13'-10	2'-7	11'-3	5	12	12'-11	1'-8	11'-3	4	9	25'-10	4	9	3'-10	4	4.5	33'-6
2	5	12	27'-10	5	12	4'-11	5	4.5	33'-0	5	12	33'-6	5	12	6'-4	4	12	4'-5	4	9	13'-5	2'-5	11'-0	5	9	12'-11	1'-11	11'-0	5	12	26'-0	6	12	4'-8	5	4.5	33'-6
3-6	5	12	25'-4	5	12	4'-5	5	4.5	33'-0	4	9	33'-6	4	9	6'-0	4	9	4'-9	5	12	13'-6	2'-7	10'-11	5	12	12'-7	1'-8	10'-11	4	9	25'-5	5	9	4'-5	4	4.5	33'-6
7-8	4	9	25'-3	5	9	4'-9	4	4.5	33'-0	5	12	33'-6	5	12	6'-4	4	12	5'-0	5	12	13'-4	2'-5	10'-11	6	12	12'-9	1'-10	10'-11	5	9	25'-4	5	9	3'-11	5	4.5	33'-6
9-10	5	9	25'-2	5	9	4'-2	5	4.5	33'-0	5	12	33'-6	6	12	7'-1	5	12	5'-10	4	9	13'-2	2'-3	10'-11	5	9	12'-10	1'-11	10'-11	6	12	25'-6	6	12	4'-3	6	4.5	33'-6
11-12	5	9	25'-1	5	9	4'-2	5	4.5	33'-0	5	12	33'-6	6	12	7'-3	5	12	5'-4	5	12	13'-5	2'-4	11'-1	5	12	12'-9	1'-8	11'-1	6	12	25'-6	6	12	4'-4	6	4.5	33'-6
13-15	6	12	25'-3	6	12	4'-5	6	4.5	33'-0	5	12	33'-6	6	12	7'-4	5	12	5'-4	5	9	14'-1	2'-10	11'-3	5	9	13'-2	1'-11	11'-3	7	15	25'-7	7	15	4'-7	7	7.5	33'-6
16-17	6	12	25'-2	6	12	4'-6	6	4.5	33'-0	5	12	33'-6	6	12	7'-5	4	12	5'-0	5	9	14'-3	2'-10	11'-5	5	9	13'-4	1'-11	11'-5	7	15	25'-7	7	15	4'-7	7	7.5	33'-6
18-19	7	15	25'-4	7	15	4'-8	7	7.5	33'-0	5	12	33'-6	6	12	7'-6	4	12	5'-0	5	9	13'-9	2'-3	11'-6	5	9	13'-5	1'-11	11'-6	6	12	25'-5	6	12	4'-5	6	4.5	33'-6
20-21	7	15	25'-4	7	15	4'-9	7	7.5	33'-0	5	12	33'-6	6	12	7'-7	4	12	5'-2	5	9	13'-11	2'-3	11'-8	5	9	13'-7	1'-11	11'-8	6	12	25'-5	6	12	4'-5	6	4.5	33'-6
22-23	7	15	25'-4	7	15	4'-8	7	7.5	33'-0	5	12	33'-6	6	12	7'-8	4	12	5'-4	5	9	14'-1	2'-3	11'-10	6	9	14'-0	2'-2	11'-10	6	12	25'-5	6	12	4'-7	6	4.5	33'-6
24-25	7	15	25'-4	7	15	4'-8	7	7.5	33'-0	5	12	33'-6	6	12	7'-10	4	12	5'-5	5	9	14'-7	2'-7	12'-0	6	9	14'-2	2'-2	12'-0	6	12	25'-6	6	12	4'-9	6	4.5	33'-6

DIMENSIONS

FILL	S	H	A	B	C	*D	*E	*F	*G	*J
0	10	10	10.5	10	10	9	4.5	9	12	12
1	10	10	11	11	10	9	4.5	9	12	12
2	10	10	9	10	10	9	4.5	4.5	12	12
3-6	10	10	8	10	10	9	4.5	9	12	12
7-8	10	10	8	10	10	9	4.5	9	12	12
9-10	10	10	8	10	10	9	4.5	4.5	12	12
11-12	10	10	9	11	10	9	4.5	9	12	12
13-15	10	10	10	12	10	9	4.5	4.5	12	18
16-17	10	10	11	13	10	6	4.5	4.5	12	18
18-19	10	10	11.5	14	10	6	7.5	4.5	18	12
20-21	10	10	12.5	15	10	9	7.5	4.5	18	12
22-23	10	10	13.5	16	10	9	4.5	4.5	18	12
24-25	10	10	14.5	17	10	9	4.5	4.5	18	12

DIMENSIONS

FILL	*K	*L	R	T	U	V	W	X	Y	Z
0	4.5	3	1'-2	1'-5	2'-7	——	2'-5	2'-4	——	1'-10
1	4.5	3	1'-4	1'-8	2'-6	——	2'-5	2'-4	3'-8	1'-11
2	4.5	3	1'-7	1'-7	2'-6	5'-11	2'-9	3'-3	3'-10	2'-4
3-6	4.5	3	2'-6	2'-2	2'-3	3'-5	2'-10	3'-1	3'-3	2'-3
7-8	4.5	3	2'-2	2'-3	2'-5	3'-4	2'-7	2'-11	3'-2	2'-0
9-10	4.5	3	2'-11	2'-7	2'-1	3'-3	2'-3	2'-6	3'-4	2'-2
11-12	4.5	3	2'-11	2'-7	2'-1	3'-2	2'-3	2'-9	3'-4	2'-2
13-15	4.5	3	2'-10	2'-4	2'-3	3'-4	2'-3	2'-9	3'-5	2'-4
16-17	4.5	3	2'-8	2'-4	2'-3	3'-3	2'-3	2'-11	3'-5	2'-4
18-19	4.5	3	3'-1	2'-5	2'-4	3'-5	2'-3	2'-11	3'-3	2'-3
20-21	4.5	3	3'-1	2'-5	2'-5	3'-5	2'-3	2'-10	3'-3	2'-3
22-23	4.5	3	2'-9	2'-3	2'-4	3'-5	2'-3	2'-9	3'-3	2'-4
24-25	4.5	3	2'-8	2'-2	2'-4	3'-5	2'-2	2'-8	3'-4	2'-5

BENT BAR DETAILS

BARS	D
4	3
5	3 3/4
6	4 1/2
7	5 1/4

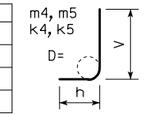

NOTE: ALL DIMENSIONS ARE OUT TO OUT D = PIN DIAMETER

* THESE DIMENSIONS ARE CORRECT FOR 38'-0 LONG STANDARD SECTIONS ONLY. DIMENSIONS MUST BE RECALCULATED FOR ALL OTHER SECTION LENGTHS.

QUANTITIES

FILL	CONCRETE CU YD/FT				STEEL
	SLAB	FLOOR	WALL	TOTAL	LBS/FT
0	1.169	1.127	1.182	3.478	448.82
1	1.220	1.232	1.182	3.634	437.79
2	1.014	1.127	1.182	3.323	486.92
3-6	0.911	1.127	1.182	3.220	424.53
7-8	0.911	1.127	1.182	3.220	458.74
9-10	0.911	1.127	1.182	3.220	491.92
11-12	1.014	1.232	1.182	3.428	506.45
13-15	1.117	1.336	1.182	3.635	525.39
16-17	1.220	1.440	1.182	3.842	536.45
18-19	1.271	1.545	1.182	3.998	544.03
20-21	1.374	1.649	1.182	4.205	565.37
22-23	1.477	1.754	1.182	4.413	570.47
24-25	1.580	1.858	1.182	4.620	575.76

DIMENSIONS LISTED ON THIS SHEET TO BE USED IN CONJUNCTION WITH SHEET TRRCB 2-01.

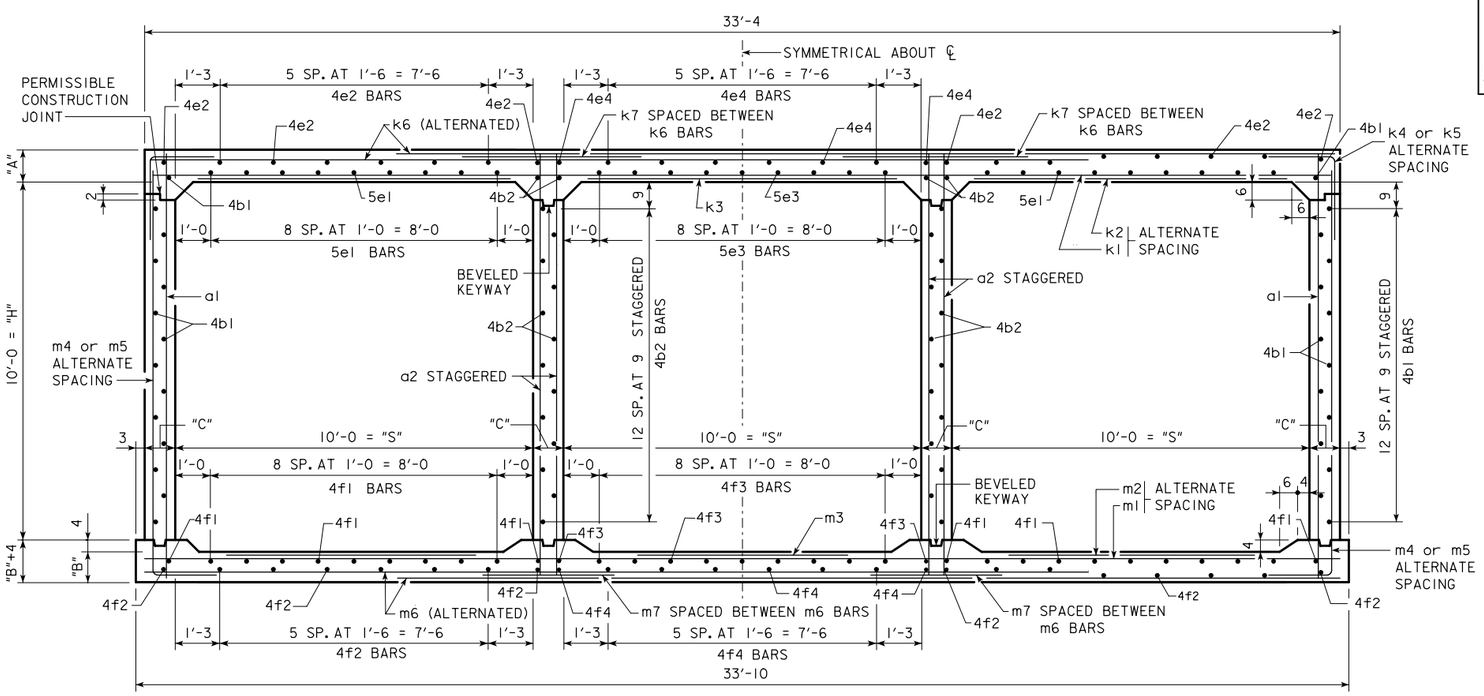

TRIPLE 10 x 10 BARREL SECTION

LATEST REVISION DATE : 06-02

APPROVED BY :

STANDARD DESIGN

CULVERT BARREL DETAILS

FOR

TRIPLE REINFORCED CONCRETE BOX CULVERTS

IOWA DEPARTMENT OF TRANSPORTATION - HIGHWAY DIVISION

SEPT., 2001

TRRCB 10-10-01

CORRECTION 06-02 - CHANGED NUMBER OF SPACES OF4e2 & 4e4 BARS IN TRIPLE 10 x 10 BARREL SECTION.
TRB 10-10-01 - 09-01 THIS SHEET ISSUED.

VARIABLE DIMENSIONS AND QUANTITIES FOR TRIPLE 10 x 12 BARREL SECTIONS

REINFORCING BAR LIST

FILL	a1			a2			4b1			4b2			5e1			4e2			5e3			4e4			4f1			4f2			4f3			4f4			k1			k2			k3			k4					k5			
	SIZE	SP	LENGTH	SIZE	SP	LENGTH	SIZE	SP	NO.	SIZE	SP	NO.	SIZE	SP	NO.	SIZE	SP	NO.	SIZE	SP	NO.	SIZE	SP	NO.	SIZE	SP	NO.	SIZE	SP	NO.	SIZE	SP	NO.	SIZE	SP	NO.	SIZE	SP	LENGTH	SIZE	SP	LENGTH	SIZE	SP	LENGTH	SIZE	SP	LENGTH	h	v	SIZE	SP	LENGTH	h	v
0	6	12	13'-8	7	9	13'-8	4	9	32	4	9	34	5	12	18	4	18	16	5	12	9	4	18	8	4	12	22	4	18	16	4	12	11	4	18	8	5	12	33'-8	5	12	8'-6	5	12	8'-7	5	12	4'-7	2'-4	2'-3	5	12	4'-2	1'-11	2'-3
1	6	12	13'-9	7	9	13'-9	4	9	32	4	9	34	5	12	18	4	18	16	5	12	9	4	18	8	4	12	22	4	18	16	4	12	11	4	18	8	5	12	33'-8	5	12	8'-4	5	12	8'-3	5	12	4'-6	2'-3	2'-3	5	12	4'-2	1'-11	2'-3
2	4	9	13'-6	7	9	13'-6	4	9	32	4	9	34	5	12	18	4	18	16	5	12	9	4	18	8	4	12	22	4	18	16	4	12	11	4	18	8	4	9	33'-8	5	9	8'-1	5	9	7'-8	6	15	5'-9	3'-2	2'-7	6	15	4'-9	2'-2	2'-7
3-6	5	12	13'-5	7	9	13'-5	4	9	32	4	9	34	5	12	18	4	18	16	5	12	9	4	18	8	4	12	22	4	18	16	4	12	11	4	18	8	4	12	33'-8	5	12	6'-11	4	12	5'-10	5	12	5'-3	3'-0	2'-3	5	12	4'-3	2'-0	2'-3
7-8	4	9	13'-5	7	9	13'-5	4	9	32	4	9	34	5	12	18	4	18	16	5	12	9	4	18	8	4	12	22	4	18	16	4	12	11	4	18	8	4	12	33'-8	5	12	6'-10	5	12	6'-7	5	12	5'-7	3'-0	2'-7	6	12	4'-10	2'-3	2'-7
9-10	4	9	13'-5	7	9	13'-5	4	9	32	4	9	34	5	12	18	4	18	16	5	12	9	4	18	8	4	12	22	4	18	16	4	12	11	4	18	8	5	12	33'-8	5	12	6'-3	5	12	5'-7	4	9	5'-6	2'-10	2'-8	5	9	4'-11	2'-3	2'-8
11-12	5	9	13'-6	7	9	13'-6	4	9	32	4	9	34	5	12	18	4	18	16	5	12	9	4	18	8	4	12	22	4	18	16	4	12	11	4	18	8	4	9	33'-8	5	9	6'-10	5	9	6'-3	5	12	5'-5	2'-10	2'-7	6	12	4'-10	2'-3	2'-7
13-15	4	6	13'-8	7	9	13'-8	4	9	32	4	9	34	5	12	18	4	18	16	5	12	9	4	18	8	4	12	22	4	18	16	4	12	11	4	18	8	4	9	33'-8	5	9	6'-11	5	9	6'-3	5	9	5'-5	2'-9	2'-8	5	9	4'-10	2'-2	2'-8
16-17	6	12	13'-10	7	9	13'-10	4	9	32	4	9	34	5	12	18	4	18	16	5	12	9	4	18	8	4	12	22	4	18	16	4	12	11	4	18	8	4	9	33'-8	5	9	7'-0	4	9	5'-9	6	12	5'-6	2'-11	2'-7	6	12	4'-8	2'-1	2'-7
18-19	4	6	14'-0	7	9	14'-0	4	9	32	4	9	34	5	12	18	4	18	16	5	12	9	4	18	8	4	12	22	4	18	16	4	12	11	4	18	8	4	9	33'-8	5	9	7'-2	4	9	5'-11	7	15	6'-3	3'-0	3'-3	7	15	5'-9	2'-6	3'-3
20-21	4	6	14'-2	7	9	14'-2	4	9	32	4	9	34	5	12	18	4	18	16	5	12	9	4	18	8	4	12	22	4	18	16	4	12	11	4	18	8	6	15	33'-8	6	15	6'-11	5	15	5'-0	7	15	6'-4	3'-1	3'-3	7	15	5'-8	2'-5	3'-3
22-23	6	9	14'-3	7	9	14'-3	4	9	32	4	9	34	5	12	18	4	18	16	5	12	9	4	18	8	4	12	22	4	18	16	4	12	11	4	18	8	6	15	33'-8	6	15	7'-0	5	15	5'-2	7	15	6'-4	3'-1	3'-3	7	15	5'-8	2'-5	3'-3
24-25	4	6	14'-5	7	9	14'-5	4	9	32	4	9	34	5	12	18	4	18	16	5	12	9	4	18	8	4	12	22	4	18	16	4	12	11	4	18	8	6	15	33'-8	6	15	7'-1	5	15	5'-4	7	15	7'-3	3'-1	4'-2	8	15	7'-2	3'-0	4'-2

REINFORCING BAR LIST

FILL	k6			k7			k9			m1			m2			m3			m4					m5					m6			m7			m9		
	SIZE	SP	LENGTH	SIZE	SP	LENGTH	SIZE	SP	LENGTH	SIZE	SP	LENGTH	SIZE	SP	LENGTH	SIZE	SP	LENGTH	SIZE	SP	LENGTH	h	v	SIZE	SP	LENGTH	h	v	SIZE	SP	LENGTH	SIZE	SP	LENGTH	SIZE	SP	LENGTH
0	4	12	33'-8	4	12	5'-1	4	4.5	33'-8	4	12	34'-2	5	12	6'-10	4	12	6'-3	5	12	17'-1	3'-11	13'-2	5	12	15'-0	1'-10	13'-2	4	12	26'-6	5	12	4'-6	4	4.5	34'-2
1	4	12	33'-8	4	12	5'-0	4	4.5	33'-8	4	12	34'-2	5	12	6'-10	4	12	6'-2	5	12	16'-5	3'-2	13'-3	5	12	15'-1	1'-10	13'-3	4	9	26'-2	4	9	3'-7	4	4.5	34'-2
2	5	12	28'-5	5	12	4'-11	5	4.5	33'-8	5	12	34'-2	5	12	6'-3	4	12	4'-4	6	15	16'-2	3'-2	13'-0	6	15	15'-0	2'-0	13'-0	5	12	26'-5	6	12	4'-9	5	4.5	34'-2
3-6	4	9	25'-8	4	9	4'-2	4	4.5	33'-8	4	9	34'-2	4	9	5'-11	4	9	5'-8	5	12	16'-0	3'-1	12'-11	5	12	14'-11	2'-0	12'-11	4	9	25'-10	5	9	4'-7	4	4.5	34'-2
7-8	5	12	25'-8	5	12	4'-5	5	4.5	33'-8	5	12	34'-2	5	12	6'-2	5	12	5'-6	5	12	15'-9	2'-10	12'-11	6	12	15'-1	2'-2	12'-11	5	9	25'-10	5	9	4'-1	5	4.5	34'-2
9-10	5	12	25'-9	6	12	5'-0	5	4.5	33'-8	5	12	34'-2	6	12	6'-11	5	12	5'-11	5	9	15'-9	2'-10	12'-11	5	9	15'-0	2'-1	12'-11	6	12	25'-11	6	12	4'-5	6	4.5	34'-2
11-12	5	9	25'-7	5	9	4'-4	5	4.5	33'-8	5	12	34'-2	6	12	7'-1	5	12	6'-0	5	12	15'-9	2'-9	13'-0	6	12	15'-2	2'-2	13'-0	6	12	25'-11	6	12	4'-5	6	4.5	34'-2
13-15	6	12	25'-8	6	12	4'-7	6	4.5	33'-8	5	12	34'-2	6	12	7'-2	5	12	6'-0	5	9	16'-0	2'-10	13'-2	5	9	15'-3	2'-1	13'-2	5	9	25'-11	6	9	4'-9	5	4.5	34'-2
16-17	6	12	25'-8	6	12	4'-6	6	4.5	33'-8	5	12	34'-2	6	12	7'-3	5	12	6'-0	6	12	16'-2	2'-10	13'-4	6	12	15'-4	2'-0	13'-4	6	12	25'-11	6	12	4'-6	6	4.5	34'-2
18-19	6	12	25'-8	6	12	4'-7	6	4.5	33'-8	5	12	34'-2	6	12	7'-5	5	12	5'-10	7	15	16'-6	3'-0	13'-6	7	15	15'-11	2'-5	13'-6	6	12	25'-11	6	12	4'-6	6	4.5	34'-2
20-21	7	15	25'-10	7	15	4'-9	7	7.5	33'-8	5	12	34'-2	6	12	7'-6	5	12	5'-7	7	15	16'-7	2'-11	13'-8	7	15	16'-1	2'-5	13'-8	6	12	25'-11	6	12	4'-7	6	4.5	34'-2
22-23	7	15	25'-9	7	15	4'-9	7	7.5	33'-8	5	12	34'-2	6	12	7'-6	5	12	6'-0	7	15	16'-9	3'-0	13'-9	7	15	16'-2	2'-5	13'-9	7	18	26'-2	8	18	5'-5	7	4.5	34'-2
24-25	7	15	25'-9	7	15	4'-9	7	7.5	33'-8	5	12	34'-2	6	12	7'-8	5	12	6'-2	7	15	16'-10	2'-11	13'-11	8	15	16'-11	3'-0	13'-11	6	12	26'-0	6	12	4'-9	6	4.5	34'-2

DIMENSIONS

FILL	S	H	A	B	C	*D	*E	*F	*G	*J
0	10	12	10.5	10.5	12	9	4.5	9	12	12
1	10	12	11	11	12	9	4.5	9	12	12
2	10	12	9	10	12	9	4.5	7.5	12	12
3-6	10	12	8	10	12	9	4.5	9	12	12
7-8	10	12	8	10	12	9	4.5	9	12	12
9-10	10	12	8	10	12	9	4.5	4.5	12	12
11-12	10	12	8.5	11	12	9	4.5	9	12	12
13-15	10	12	9.5	12	12	6	4.5	4.5	12	12
16-17	10	12	10.5	13	12	9	4.5	9	12	12
18-19	10	12	11.5	14	12	6	4.5	7.5	12	12
20-21	10	12	12	15	12	6	7.5	7.5	18	12
22-23	10	12	13	15.5	12	9	7.5	7.5	18	12
24-25	10	12	14	16.5	12	6	7.5	7.5	18	12

DIMENSIONS

FILL	*K	*L	R	T	U	V	W	X	Y	Z
0	4.5	3	1'-3	1'-6	2'-7	——	2'-5	2'-5	3'-11	2'-3
1	4.5	3	1'-4	1'-7	2'-6	——	2'-5	2'-5	3'-7	1'-10
2	4.5	3	1'-8	1'-8	2'-6	6'-1	2'-8	3'-4	3'-10	2'-5
3-6	4.5	3	2'-7	2'-3	2'-1	3'-4	2'-9	2'-8	3'-3	2'-4
7-8	4.5	3	2'-3	2'-3	2'-3	3'-4	2'-8	2'-9	3'-3	2'-1
9-10	4.5	3	2'-9	2'-8	2'-6	3'-5	2'-3	2'-6	3'-4	2'-3
11-12	4.5	3	2'-4	2'-4	2'-2	3'-3	2'-3	2'-6	3'-4	2'-3
13-15	4.5	3	2'-5	2'-5	2'-4	3'-4	2'-3	2'-6	3'-4	2'-5
16-17	4.5	3	2'-8	2'-5	2'-3	3'-4	2'-4	2'-6	3'-4	2'-3
18-19	4.5	3	2'-7	2'-4	2'-4	3'-4	2'-3	2'-7	3'-4	2'-3
20-21	4.5	3	3'-0	2'-6	2'-5	3'-6	2'-3	2'-8	3'-4	2'-4
22-23	4.5	3	2'-11	2'-6	2'-5	3'-5	2'-3	2'-6	3'-7	2'-9
24-25	4.5	3	2'-10	2'-6	2'-5	3'-5	2'-2	2'-5	3'-5	2'-5

BENT BAR DETAILS

BARS	D
4	3
5	3¾
6	4½
7	5¼
8	6

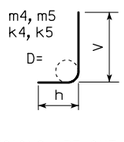

NOTE: ALL DIMENSIONS ARE OUT TO OUT D = PIN DIAMETER

* THESE DIMENSIONS ARE CORRECT FOR 38'-0 LONG STANDARD SECTIONS ONLY. DIMENSIONS MUST BE RECALCULATED FOR ALL OTHER SECTION LENGTHS.

QUANTITIES

FILL	CONCRETE CU YD/FT				STEEL
	SLAB	FLOOR	WALL	TOTAL	LBS/FT
0	1.205	1.203	1.717	4.125	490.74
1	1.257	1.256	1.717	4.230	491.63
2	1.047	1.150	1.717	3.914	526.55
3-6	0.942	1.150	1.717	3.809	467.11
7-8	0.942	1.150	1.717	3.809	513.08
9-10	0.942	1.150	1.717	3.809	550.87
11-12	0.995	1.256	1.717	3.968	566.55
13-15	1.100	1.363	1.717	4.180	586.68
16-17	1.205	1.469	1.717	4.391	598.66
18-19	1.309	1.576	1.717	4.602	617.61
20-21	1.362	1.682	1.717	4.761	633.82
22-23	1.467	1.735	1.717	4.919	659.76
24-25	1.572	1.842	1.717	5.131	672.26

DIMENSIONS LISTED ON THIS SHEET TO BE USED IN CONJUNCTION WITH SHEET TRRCB 2-01.

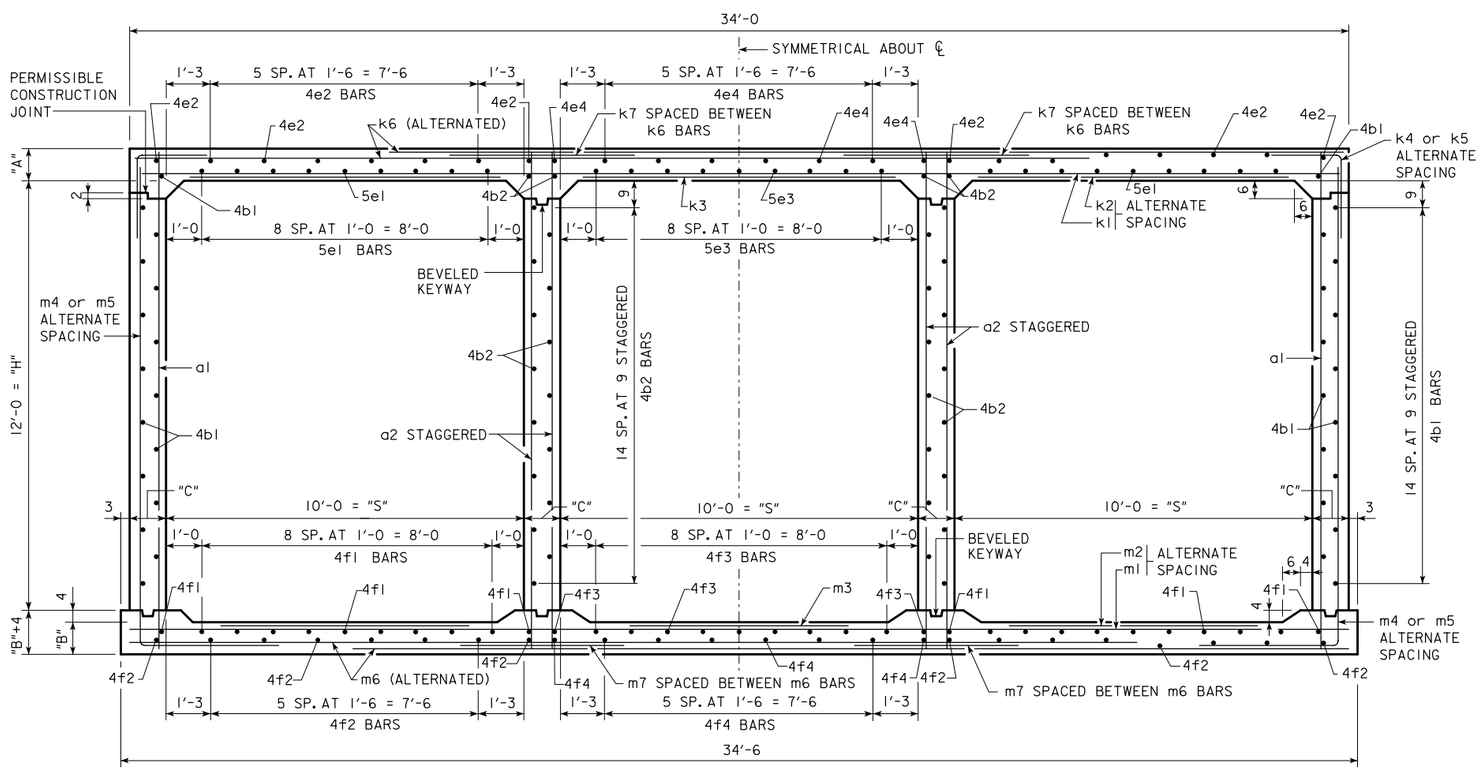

TRIPLE 10 x 12 BARREL SECTION

STANDARD DESIGN

CULVERT BARREL DETAILS

FOR

TRIPLE REINFORCED CONCRETE BOX CULVERTS

LATEST REVISION DATE :

APPROVED BY :

IOWA DEPARTMENT OF TRANSPORTATION - HIGHWAY DIVISION

SEPT., 2001

TRRCB 10-12-01

TRB 10-12-01 - 09-01 THIS SHEET ISSUED.

VARIABLE DIMENSIONS AND QUANTITIES FOR TRIPLE 12 x 6 BARREL SECTIONS

REINFORCING BAR LIST

FILL	4a1			a2			4b1			4b2			5e1			4e2			5e3			4e4			4f1		
	SIZE	SP	LENGTH	SIZE	SP	LENGTH	SIZE	SP	NO.	SIZE	SP	NO.	SIZE	SP	NO.	SIZE	SP	NO.	SIZE	SP	NO.	SIZE	SP	NO.	SIZE	SP	NO.
0	4	9	7'-8	5	4.5	7'-8	4	9	16	4	9	18	5	12	22	4	17	20	5	12	11	4	17	10	4	12	26
1	4	9	7'-10	5	4.5	7'-10	4	9	16	4	9	18	5	12	22	4	17	20	5	12	11	4	17	10	4	12	26
2	4	6	7'-6	6	6	7'-6	4	9	16	4	9	18	5	12	22	4	17	20	5	12	11	4	17	10	4	12	26
3-6	4	9	7'-5	4	4.5	7'-5	4	9	16	4	9	18	5	12	22	4	17	20	5	12	11	4	17	10	4	12	26
7-8	4	9	7'-5	4	4.5	7'-5	4	9	16	4	9	18	5	12	22	4	17	20	5	12	11	4	17	10	4	12	26
9-10	4	9	7'-7	4	4.5	7'-7	4	9	16	4	9	18	5	12	22	4	17	20	5	12	11	4	17	10	4	12	26
11-12	4	9	7'-9	4	4.5	7'-9	4	9	16	4	9	18	5	12	22	4	17	20	5	12	11	4	17	10	4	12	26
13-15	4	9	8'-0	4	4.5	8'-0	4	9	16	4	9	18	5	12	22	4	17	20	5	12	11	4	17	10	4	12	26
16-17	4	9	8'-2	4	4.5	8'-2	4	9	16	4	9	18	5	12	22	4	17	20	5	12	11	4	17	10	4	12	26
18-19	4	9	8'-5	4	4.5	8'-5	4	9	16	4	9	18	5	12	22	4	17	20	5	12	11	4	17	10	4	12	26
20-21	4	9	8'-7	4	4.5	8'-7	4	9	16	4	9	18	5	12	22	4	17	20	5	12	11	4	17	10	4	12	26
22-23	4	9	8'-9	5	6	8'-9	4	9	16	4	9	18	5	12	22	4	17	20	5	12	11	4	17	10	4	12	26
24-25	4	9	8'-11	5	4.5	8'-11	4	9	16	4	9	18	5	12	22	4	17	20	5	12	11	4	17	10	4	12	26

FILL	4f2			4f3			4f4			k1			k2			k3			k4					k5				
	SIZE	SP	NO.	SIZE	SP	NO.	SIZE	SP	NO.	SIZE	SP	LENGTH	SIZE	SP	LENGTH	SIZE	SP	LENGTH	SIZE	SP	LENGTH	h	v	SIZE	SP	LENGTH	h	v
0	4	17	20	4	12	13	4	17	10	4	9	38'-8	5	9	10'-10	5	9	10'-1	4	9	4'-10	2'-2	2'-8	5	9	4'-7	1'-11	2'-8
1	4	17	20	4	12	13	4	17	10	4	9	38'-8	5	9	10'-7	5	9	9'-8	4	9	4'-8	2'-0	2'-8	5	9	4'-6	1'-10	2'-8
2	4	17	20	4	12	13	4	17	10	5	9	38'-8	5	9	8'-8	5	9	7'-8	5	12	4'-10	2'-3	2'-7	6	12	4'-6	1'-11	2'-7
3-6	4	17	20	4	12	13	4	17	10	4	9	38'-8	5	9	8'-1	4	9	6'-4	4	9	4'-9	2'-1	2'-8	5	9	4'-8	2'-0	2'-8
7-8	4	17	20	4	12	13	4	17	10	5	12	38'-8	6	12	8'-2	5	12	6'-8	5	12	4'-10	2'-3	2'-7	6	12	4'-6	1'-11	2'-7
9-10	4	17	20	4	12	13	4	17	10	5	12	38'-8	6	12	8'-6	4	12	5'-5	5	12	4'-7	2'-0	2'-7	6	12	4'-6	1'-11	2'-7
11-12	4	17	20	4	12	13	4	17	10	5	9	38'-8	5	9	7'-8	4	9	4'-4	5	12	4'-10	2'-3	2'-7	6	12	4'-5	1'-10	2'-7
13-15	4	17	20	4	12	13	4	17	10	6	12	38'-8	6	12	8'-1	4	12	4'-0	5	12	4'-10	2'-3	2'-7	6	12	4'-5	1'-10	2'-7
16-17	4	17	20	4	12	13	4	17	10	7	15	38'-8	7	15	8'-6	4	15	4'-0	5	12	4'-11	2'-4	2'-7	6	12	4'-4	1'-9	2'-7
18-19	4	17	20	4	12	13	4	17	10	7	15	38'-8	7	15	8'-8	4	15	4'-0	5	12	5'-7	3'-0	2'-7	6	12	4'-4	1'-9	2'-7
20-21	4	17	20	4	12	13	4	17	10	7	15	38'-8	7	15	8'-8	4	15	4'-0	5	12	5'-9	3'-2	2'-7	6	12	4'-10	2'-3	2'-7
22-23	4	17	20	4	12	13	4	17	10	7	15	38'-8	7	15	8'-10	4	15	4'-0	5	12	5'-10	3'-3	2'-7	6	12	4'-10	2'-3	2'-7
24-25	4	17	20	4	12	13	4	17	10	7	15	38'-8	7	15	9'-0	4	15	4'-0	5	12	5'-11	3'-4	2'-7	6	12	4'-10	2'-3	2'-7

REINFORCING BAR LIST

FILL	k6			k7			k9			m1			m2			m3			m4					m5					m6			m7			m9		
	SIZE	SP	LENGTH	SIZE	SP	LENGTH	SIZE	SP	LENGTH	SIZE	SP	LENGTH	SIZE	SP	LENGTH	SIZE	SP	LENGTH	SIZE	SP	LENGTH	h	v	SIZE	SP	LENGTH	h	v	SIZE	SP	LENGTH	SIZE	SP	LENGTH	SIZE	SP	LENGTH
0	4	12	33'-10	5	12	6'-4	4	4.5	38'-8	4	12	39'-2	5	12	7'-11	4	12	7'-0	4	9	8'-10	1'-8	7'-2	5	9	9'-0	1'-10	7'-2	4	9	39'-2	5	9	4'-7	4	4.5	39'-2
1	5	12	31'-11	5	12	5'-5	5	4.5	38'-8	4	12	39'-2	5	12	8'-1	4	12	6'-11	4	9	9'-4	2'-0	7'-4	5	9	9'-2	1'-10	7'-4	4	9	30'-2	5	9	4'-8	4	4.5	39'-2
2	6	12	31'-6	6	12	5'-6	6	4.5	38'-8	5	9	39'-2	5	9	7'-1	—	—	—	5	12	9'-3	2'-3	7'-0	6	12	8'-9	1'-9	7'-0	5	9	30'-3	6	9	4'-9	5	4.5	39'-2
3-6	5	9	29'-9	6	9	5'-3	5	4.5	38'-8	5	12	39'-2	6	12	8'-1	4	12	5'-8	4	9	8'-11	2'-0	6'-11	5	9	8'-9	1'-10	6'-11	5	9	29'-10	6	9	4'-10	5	4.5	39'-2
7-8	6	12	29'-9	7	12	5'-6	6	4.5	38'-8	5	9	39'-2	5	9	7'-2	4	9	5'-2	5	12	9'-0	2'-1	6'-11	6	12	8'-8	1'-9	6'-11	6	9	29'-9	6	9	4'-5	6	4.5	39'-2
9-10	5	9	29'-6	6	9	5'-3	5	4.5	38'-8	5	9	39'-2	5	9	7'-5	4	9	5'-1	5	12	9'-4	2'-3	7'-1	6	12	8'-10	1'-9	7'-1	6	9	29'-9	6	9	4'-5	6	4.5	39'-2
11-12	6	9	29'-6	6	9	4'-7	6	4.5	38'-8	6	12	39'-2	6	12	7'-11	4	12	4'-9	5	12	9'-6	2'-3	7'-3	6	12	9'-0	1'-9	7'-3	6	9	29'-8	6	9	4'-6	6	4.5	39'-2
13-15	6	9	29'-5	6	9	4'-9	6	4.5	38'-8	7	15	39'-2	7	15	8'-5	4	15	4'-0	5	12	9'-10	2'-4	7'-6	6	12	9'-3	1'-9	7'-6	6	9	29'-8	6	9	4'-9	6	4.5	39'-2
16-17	6	9	29'-5	6	9	4'-8	6	4.5	38'-8	7	15	39'-2	7	15	8'-7	4	15	4'-0	5	12	10'-7	2'-11	7'-8	6	12	9'-5	1'-9	7'-8	7	15	29'-11	8	15	5'-8	7	7.5	39'-2
18-19	7	15	29'-8	8	15	5'-9	7	7.5	38'-8	7	15	39'-2	7	15	8'-7	4	15	4'-0	5	12	10'-11	3'-0	7'-11	6	12	9'-8	1'-9	7'-11	7	15	29'-11	8	15	5'-9	7	7.5	39'-2
20-21	6	9	29'-5	6	9	5'-0	6	4.5	38'-8	5	9	39'-2	6	9	9'-1	4	9	4'-8	5	12	11'-2	3'-1	8'-1	6	12	9'-10	1'-9	8'-1	7	15	29'-11	8	15	5'-9	7	7.5	39'-2
22-23	6	9	29'-6	6	9	5'-1	6	4.5	38'-8	5	9	39'-2	6	9	9'-4	4	9	4'-10	5	12	11'-5	3'-2	8'-3	6	12	10'-0	1'-9	8'-3	7	15	29'-10	8	15	5'-10	7	7.5	39'-2
24-25	6	9	29'-7	6	9	5'-4	6	4.5	38'-8	5	9	39'-2	6	9	9'-8	4	9	5'-0	5	12	11'-9	3'-4	8'-5	6	12	10'-2	1'-9	8'-5	7	15	29'-11	8	15	5'-11	7	7.5	39'-2

DIMENSIONS

FILL	S	H	A	B	C	*D	*E	*F	*G	*J
0	12	6	11	10.5	9	9	4.5	4.5	12	12
1	12	6	11.5	11.5	9	9	4.5	4.5	12	12
2	12	6	9.5	10	9	6	4.5	9	12	12
3-6	12	6	8	10	9	9	4.5	4.5	12	12
7-8	12	6	8	10	9	9	4.5	9	12	12
9-10	12	6	9.5	11	9	9	4.5	9	12	12
11-12	12	6	10	12	9	9	4.5	9	12	12
13-15	12	6	11.5	13.5	9	9	4.5	9	12	12
16-17	12	6	12.5	15	9	9	7.5	9	12	18
18-19	12	6	14	16	9	9	7.5	9	18	18
20-21	12	6	15	17	9	9	7.5	9	12	18
22-23	12	6	16	18	9	9	7.5	9	12	18
24-25	12	6	17	19.5	9	9	7.5	9	12	18

DIMENSIONS

FILL	*K	*L	R	T	U	V	W	X	Y	Z
0	4.5	3	1'-4	1'-7	3'-2	8'-2	2'-11	2'-10	——	2'-4
1	4.5	3	1'-7	1'-9	2'-9	6'-3	3'-0	2'-11	4'-3	2'-4
2	4.5	3	2'-6	2'-7	2'-9	5'-10	3'-4	——	4'-4	2'-5
3-6	4.5	3	3'-2	2'-10	2'-8	4'-1	2'-10	3'-7	3'-11	2'-5
7-8	4.5	3	3'-0	2'-9	2'-9	4'-1	3'-4	3'-10	3'-10	2'-3
9-10	4.5	3	3'-8	2'-9	2'-8	3'-10	3'-3	3'-10	3'-10	2'-3
11-12	4.5	3	4'-2	3'-3	2'-4	3'-10	3'-2	4'-0	3'-9	2'-3
13-15	7.5	3	4'-5	3'-2	2'-5	3'-9	3'-0	4'-5	3'-9	2'-5
16-17	7.5	3	4'-5	3'-0	2'-4	3'-9	3'-0	4'-5	4'-0	2'-10
18-19	7.5	3	4'-5	3'-0	2'-11	4'-0	3'-0	4'-5	4'-0	2'-11
20-21	4.5	3	4'-5	3'-0	2'-6	3'-9	2'-10	4'-1	4'-0	2'-11
22-23	4.5	3	4'-5	2'-11	2'-7	3'-10	2'-8	4'-0	3'-11	2'-11
24-25	4.5	3	4'-5	2'-11	2'-8	3'-11	2'-7	3'-10	4'-0	3'-0

BENT BAR DETAILS

BARS	D
4	3
5	$3\frac{3}{4}$
6	$4\frac{1}{2}$
7	$5\frac{1}{4}$

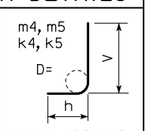

NOTE: ALL DIMENSIONS ARE OUT TO OUT D = PIN DIAMETER

* THESE DIMENSIONS ARE CORRECT FOR 38'-0 LONG STANDARD SECTIONS ONLY. DIMENSIONS MUST BE RECALCULATED FOR ALL OTHER SECTION LENGTHS.

QUANTITIES

FILL	CONCRETE CU YD/FT				STEEL
	SLAB	FLOOR	WALL	TOTAL	LBS/FT
0	1.407	1.359	0.620	3.386	451.55
1	1.467	1.481	0.620	3.568	455.26
2	1.226	1.298	0.620	3.144	550.47
3-6	1.046	1.298	0.620	2.964	482.82
7-8	1.046	1.298	0.620	2.964	533.66
9-10	1.226	1.420	0.620	3.266	526.47
11-12	1.286	1.542	0.620	3.448	562.61
13-15	1.467	1.725	0.620	3.812	582.74
16-17	1.587	1.907	0.620	4.114	589.50
18-19	1.768	2.029	0.620	4.417	591.00
20-21	1.888	2.151	0.620	4.659	597.55
22-23	2.009	2.273	0.620	4.902	607.34
24-25	2.129	2.456	0.620	5.205	625.42

DIMENSIONS LISTED ON THIS SHEET TO BE USED IN CONJUNCTION WITH SHEET TRRCB 2-01.

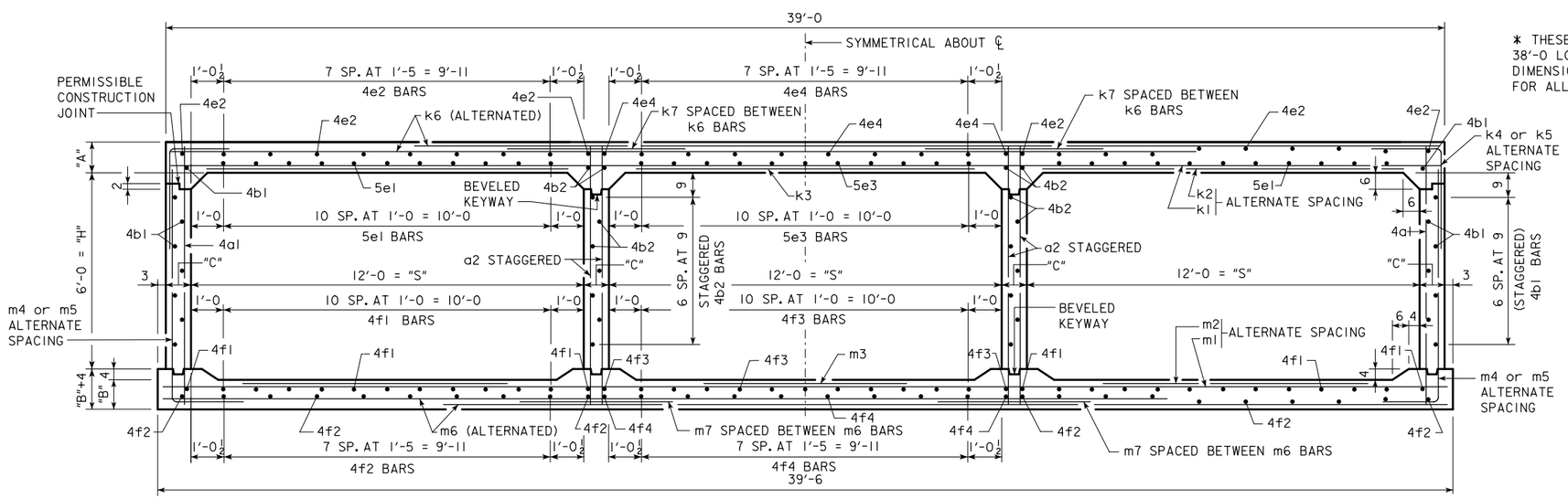

TRIPLE 12 x 6 BARREL SECTION

LATEST REVISION DATE :

APPROVED BY :

STANDARD DESIGN

CULVERT BARREL DETAILS

FOR

TRIPLE REINFORCED CONCRETE BOX CULVERTS

IOWA DEPARTMENT OF TRANSPORTATION - HIGHWAY DIVISION

SEPT., 2001

TRRCB 12-6-01

TRB 12-6-01 - 09-01 THIS SHEET ISSUED.

VARIABLE DIMENSIONS AND QUANTITIES FOR TRIPLE 12 x 8 BARREL SECTIONS

REINFORCING BAR LIST

FILL	4a1			a2			4b1			4b2			5e1			4e2			5e3			4e4			4f1			4f2			4f3			4f4			k1			k2			k3			k4					k5				
	SIZE	SP	LENGTH	SIZE	SP	LENGTH	SIZE	SP	NO.	SIZE	SP	NO.	SIZE	SP	NO.	SIZE	SP	NO.	SIZE	SP	NO.	SIZE	SP	NO.	SIZE	SP	NO.	SIZE	SP	NO.	SIZE	SP	NO.	SIZE	SP	NO.	SIZE	SP	LENGTH	SIZE	SP	LENGTH	SIZE	SP	LENGTH	SIZE	SP	LENGTH	h	v	SIZE	SP	LENGTH	h	v
0	4	9	9'-8	5	4.5	9'-8	4	9	22	4	9	24	5	12	22	4	17	20	5	12	11	4	17	10	4	12	26	4	17	20	4	12	13	4	17	10	4	9	38'-8	5	9	10'-10	5	9	10'-2	4	9	4'-5	1'-9	2'-8	5	9	4'-7	1'-11	2'-8
1	4	9	9'-10	5	6	9'-10	4	9	22	4	9	24	5	12	22	4	17	20	5	12	11	4	17	10	4	12	26	4	17	20	4	12	13	4	17	10	4	9	38'-8	5	9	10'-7	5	9	9'-8	4	9	4'-8	2'-0	2'-8	5	9	4'-6	1'-10	2'-8
2	4	9	9'-6	5	4.5	9'-6	4	9	22	4	9	24	5	12	22	4	17	20	5	12	11	4	17	10	4	12	26	4	17	20	4	12	13	4	17	10	6	12	38'-8	6	12	9'-1	5	12	7'-6	4	9	4'-10	2'-2	2'-8	5	9	4'-7	1'-11	2'-8
3-6	4	9	9'-5	5	4.5	9'-5	4	9	22	4	9	24	5	12	22	4	17	20	5	12	11	4	17	10	4	12	26	4	17	20	4	12	13	4	17	10	5	12	38'-8	6	12	8'-10	5	12	7'-5	4	9	4'-11	2'-3	2'-8	5	9	4'-8	2'-0	2'-8
7-8	4	9	9'-5	4	4.5	9'-5	4	9	22	4	9	24	5	12	22	4	17	20	5	12	11	4	17	10	4	12	26	4	17	20	4	12	13	4	17	10	5	12	38'-8	6	12	8'-3	5	12	6'-8	5	12	4'-11	2'-4	2'-7	6	12	4'-6	1'-11	2'-7
9-10	4	9	9'-8	4	4.5	9'-8	4	9	22	4	9	24	5	12	22	4	17	20	5	12	11	4	17	10	4	12	26	4	17	20	4	12	13	4	17	10	5	12	38'-8	6	12	8'-6	4	12	5'-5	5	12	4'-8	2'-1	2'-7	6	12	4'-6	1'-11	2'-7
11-12	4	6	9'-10	4	4.5	9'-10	4	9	22	4	9	24	5	12	22	4	17	20	5	12	11	4	17	10	4	12	26	4	17	20	4	12	13	4	17	10	5	9	38'-8	5	9	7'-9	4	9	4'-1	5	12	4'-10	2'-3	2'-7	6	12	4'-5	1'-10	2'-7
13-15	4	6	10'-0	4	4.5	10'-0	4	9	22	4	9	24	5	12	22	4	17	20	5	12	11	4	17	10	4	12	26	4	17	20	4	12	13	4	17	10	6	12	38'-8	6	12	8'-2	4	12	4'-0	5	12	4'-10	2'-3	2'-7	6	12	4'-5	1'-10	2'-7
16-17	4	6	10'-2	4	4.5	10'-2	4	9	22	4	9	24	5	12	22	4	17	20	5	12	11	4	17	10	4	12	26	4	17	20	4	12	13	4	17	10	7	15	38'-8	7	15	8'-6	4	15	4'-0	5	12	4'-11	2'-4	2'-7	6	12	4'-4	1'-9	2'-7
18-19	4	9	10'-5	4	4.5	10'-5	4	9	22	4	9	24	5	12	22	4	17	20	5	12	11	4	17	10	4	12	26	4	17	20	4	12	13	4	17	10	7	15	38'-8	7	15	8'-8	4	15	4'-0	5	9	5'-8	3'-0	2'-8	5	9	4'-6	1'-10	2'-8
20-21	4	9	10'-7	4	4.5	10'-7	4	9	22	4	9	24	5	12	22	4	17	20	5	12	11	4	17	10	4	12	26	4	17	20	4	12	13	4	17	10	7	15	38'-8	7	15	8'-8	4	15	4'-0	5	9	6'-7	3'-11	2'-8	5	9	5'-0	2'-4	2'-8
22-23	4	9	10'-9	5	6	10'-9	4	9	22	4	9	24	5	12	22	4	17	20	5	12	11	4	17	10	4	12	26	4	17	20	4	12	13	4	17	10	7	15	38'-8	7	15	8'-9	4	15	4'-0	5	9	5'-11	3'-3	2'-8	5	9	5'-0	2'-4	2'-8
24-25	4	9	10'-11	5	4.5	10'-11	4	9	22	4	9	24	5	12	22	4	17	20	5	12	11	4	17	10	4	12	26	4	17	20	4	12	13	4	17	10	7	15	38'-8	7	15	9'-0	4	15	4'-0	5	9	6'-5	3'-4	3'-1	6	9	5'-9	2'-8	3'-1

REINFORCING BAR LIST

FILL	k6			k7			k9			m1			m2			m3			m4					m5					m6			m7			m9		
	SIZE	SP	LENGTH	SIZE	SP	LENGTH	SIZE	SP	LENGTH	SIZE	SP	LENGTH	SIZE	SP	LENGTH	SIZE	SP	LENGTH	SIZE	SP	LENGTH	h	v	SIZE	SP	LENGTH	h	v	SIZE	SP	LENGTH	SIZE	SP	LENGTH	SIZE	SP	LENGTH
0	4	9	38'-8	4	9	5'-4	4	4.5	38'-8	4	9	39'-2	4	9	7'-0	4	9	6'-1	4	9	11'-0	1'-10	9'-2	5	9	11'-0	1'-10	9'-2	4	9	39'-2	5	9	4'-7	4	4.5	39'-2
1	5	12	32'-6	5	12	5'-5	5	4.5	38'-8	4	9	39'-2	4	9	7'-2	4	9	6'-1	4	9	11'-4	2'-0	9'-4	5	9	11'-2	1'-10	9'-4	4	9	30'-2	5	9	4'-8	4	4.5	39'-2
2	6	12	31'-9	6	12	5'-7	6	4.5	38'-8	5	9	39'-2	5	9	7'-2	—	—	—	5	9	11'-2	2'-2	9'-0	5	9	10'-10	1'-10	9'-0	6	12	30'-5	7	12	5'-1	6	4.5	39'-2
3-6	5	9	30'-3	5	9	5'-0	5	4.5	38'-8	4	9	39'-2	5	9	8'-0	4	9	5'-8	4	9	10'-11	2'-0	8'-11	5	9	10'-9	1'-10	8'-11	5	9	29'-10	5	9	4'-1	5	4.5	39'-2
7-8	6	12	29'-9	7	12	5'-6	6	4.5	38'-8	5	9	39'-2	5	9	7'-4	4	9	4'-5	5	12	11'-1	2'-2	8'-11	6	12	10'-8	1'-9	8'-11	6	12	29'-11	7	12	5'-4	6	4.5	39'-2
9-10	5	9	29'-6	6	9	5'-3	5	4.5	38'-8	5	9	39'-2	5	9	7'-7	4	9	4'-5	5	12	11'-2	2'-0	9'-2	6	12	10'-11	1'-9	9'-2	6	12	29'-10	7	12	5'-4	6	4.5	39'-2
11-12	6	12	29'-7	7	12	5'-6	6	4.5	38'-8	6	12	39'-2	6	12	8'-0	4	12	4'-0	5	12	11'-7	2'-3	9'-4	6	12	11'-1	1'-9	9'-4	6	9	29'-8	6	9	4'-6	6	4.5	39'-2
13-15	6	9	29'-5	6	9	4'-9	6	4.5	38'-8	7	15	39'-2	7	15	8'-6	4	15	4'-0	5	12	11'-10	2'-4	9'-6	6	12	11'-3	1'-9	9'-6	6	9	29'-7	6	9	4'-7	6	4.5	39'-2
16-17	6	9	29'-4	6	9	4'-8	6	4.5	38'-8	7	15	39'-2	7	15	8'-7	4	15	4'-0	5	12	12'-7	2'-11	9'-8	6	12	11'-5	1'-9	9'-8	7	15	29'-11	8	15	5'-8	7	7.5	39'-2
18-19	7	15	29'-8	8	15	5'-9	7	7.5	38'-8	7	15	39'-2	7	15	8'-7	4	15	4'-0	5	9	12'-11	3'-0	9'-11	5	9	11'-9	1'-10	9'-11	7	15	29'-11	8	15	5'-9	7	7.5	39'-2
20-21	7	15	29'-8	8	15	6'-9	7	7.5	38'-8	5	9	39'-2	6	9	9'-1	4	9	4'-8	5	9	13'-2	3'-1	10'-1	5	9	11'-11	1'-10	10'-1	7	15	29'-10	8	15	5'-9	7	7.5	39'-2
22-23	6	9	29'-6	6	9	5'-1	6	4.5	38'-8	7	15	39'-2	7	15	8'-10	4	15	4'-0	5	9	13'-6	3'-3	10'-3	5	9	12'-1	1'-10	10'-3	7	15	29'-10	8	15	5'-10	7	7.5	39'-2
24-25	6	9	29'-7	6	9	5'-4	6	4.5	38'-8	5	9	39'-2	6	9	9'-7	4	9	5'-1	5	9	13'-9	3'-4	10'-5	6	9	12'-6	2'-1	10'-5	7	15	29'-11	8	15	5'-11	7	7.5	39'-2

DIMENSIONS

FILL	S	H	A	B	C	*D	*E	*F	*G	*J
0	12	8	11	10.5	9	9	4.5	4.5	12	12
1	12	8	11.5	11.5	9	9	4.5	4.5	12	12
2	12	8	9.5	10	9	9	4.5	4.5	12	12
3-6	12	8	8	10	9	9	4.5	4.5	12	12
7-8	12	8	8	10.5	9	9	4.5	9	12	12
9-10	12	8	9.5	11.5	9	9	4.5	9	12	12
11-12	12	8	10.5	12.5	9	6	4.5	9	12	12
13-15	12	8	11.5	14	9	6	4.5	9	12	12
16-17	12	8	12.5	15	9	6	7.5	9	12	18
18-19	12	8	14	16	9	9	7.5	4.5	18	18
20-21	12	8	15	17	9	9	7.5	4.5	18	18
22-23	12	8	16	18.5	9	9	7.5	4.5	12	18
24-25	12	8	17	19.5	9	9	7.5	4.5	12	18

DIMENSIONS

FILL	*K	*L	R	T	U	V	W	X	Y	Z
0	4.5	3	1'-4	1'-6	2'-8	—	3'-5	3'-4	—	2'-4
1	4.5	3	1'-6	1'-8	2'-9	6'-10	3'-5	3'-4	4'-3	2'-4
2	4.5	3	2'-8	2'-5	2'-10	6'-1	3'-4	—	4'-6	2'-7
3-6	4.5	3	2'-8	2'-5	2'-6	4'-7	2'-11	3'-7	3'-11	2'-1
7-8	4.5	3	3'-0	2'-9	2'-9	4'-1	3'-4	4'-2	4'-0	2'-8
9-10	4.5	3	3'-8	2'-10	2'-8	3'-10	3'-3	4'-2	3'-11	2'-8
11-12	4.5	3	4'-4	3'-3	2'-9	3'-11	3'-2	4'-5	3'-9	2'-3
13-15	7.5	3	4'-4	3'-1	2'-5	3'-9	3'-0	4'-5	3'-8	2'-4
16-17	7.5	3	4'-5	3'-0	2'-4	3'-8	3'-0	4'-5	4'-0	2'-10
18-19	7.5	3	4'-5	2'-11	2'-11	4'-0	3'-0	4'-5	4'-0	2'-11
20-21	4.5	3	4'-5	3'-0	3'-5	4'-0	2'-9	4'-0	3'-11	2'-11
22-23	7.5	3	4'-5	3'-0	2'-7	3'-10	2'-11	4'-5	3'-11	2'-11
24-25	4.5	3	4'-5	2'-10	2'-8	3'-11	2'-7	3'-10	4'-0	3'-0

BENT BAR DETAILS

BARS	D
4	3
5	3¾
6	4½
7	5¼

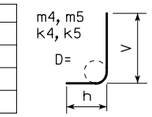

NOTE: ALL DIMENSIONS ARE OUT TO OUT D = PIN DIAMETER

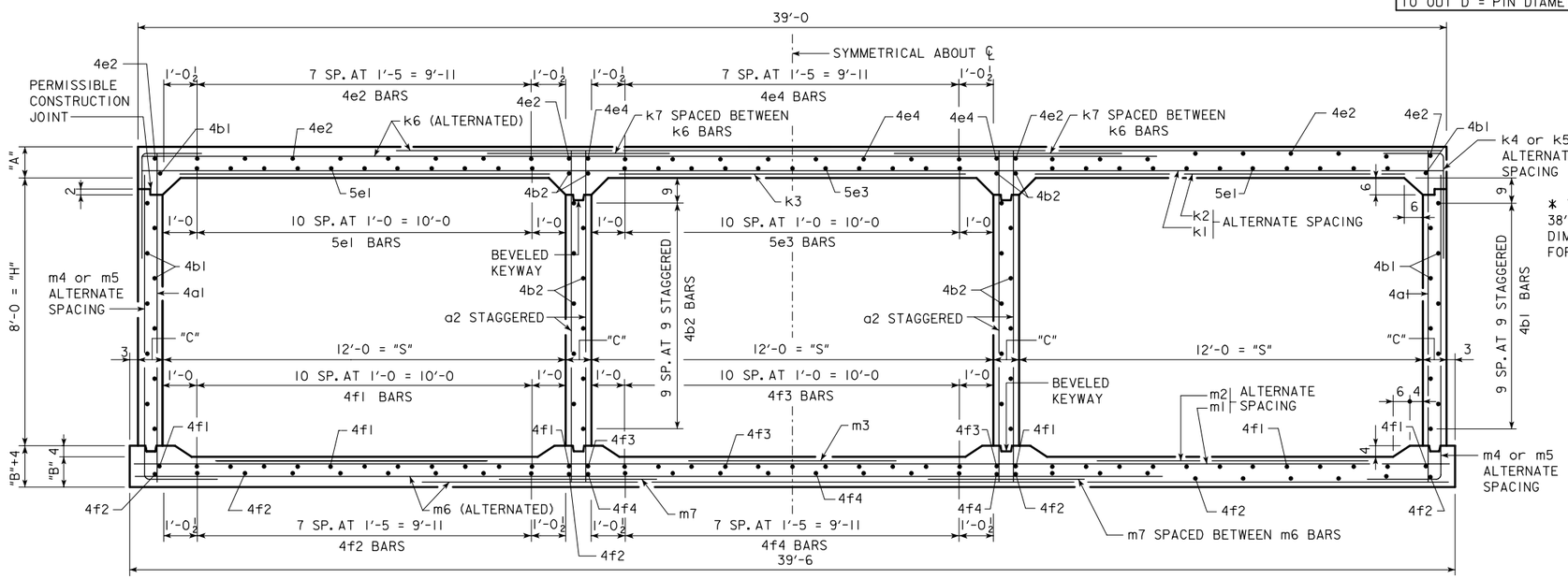

TRIPLE 12 x 8 BARREL SECTION

* THESE DIMENSIONS ARE CORRECT FOR 38'-0 LONG STANDARD SECTIONS ONLY. DIMENSIONS MUST BE RECALCULATED FOR ALL OTHER SECTION LENGTHS.

QUANTITIES

FILL	CONCRETE CU YD/FT SLAB	FLOOR	WALL	TOTAL	STEEL LBS/FT
0	1.407	1.359	0.842	3.608	495.79
1	1.467	1.481	0.842	3.790	479.18
2	1.226	1.298	0.842	3.366	592.32
3-6	1.046	1.298	0.842	3.186	520.87
7-8	1.046	1.359	0.842	3.247	552.66
9-10	1.226	1.481	0.842	3.549	545.37
11-12	1.347	1.603	0.842	3.792	590.53
13-15	1.467	1.786	0.842	4.095	619.82
16-17	1.587	1.907	0.842	4.336	626.87
18-19	1.768	2.029	0.842	4.639	631.21
20-21	1.888	2.151	0.842	4.881	639.16
22-23	2.009	2.334	0.842	5.185	650.84
24-25	2.129	2.456	0.842	5.427	695.53

DIMENSIONS LISTED ON THIS SHEET TO BE USED IN CONJUNCTION WITH SHEET TRRCB 2-01.

LATEST REVISION DATE :

APPROVED BY :

STANDARD DESIGN

CULVERT BARREL DETAILS

FOR

TRIPLE REINFORCED CONCRETE BOX CULVERTS

IOWA DEPARTMENT OF TRANSPORTATION - HIGHWAY DIVISION

SEPT., 2001

TRRCB 12-8-01

TRB 12-8-01 - 09-01 THIS SHEET ISSUED.

VARIABLE DIMENSIONS AND QUANTITIES FOR TRIPLE 12 x 10 BARREL SECTIONS

REINFORCING BAR LIST

FILL	a1			a2			4b1			4b2			5e1			4e2			5e3			4e4		
	SIZE	SP	LENGTH	SIZE	SP	LENGTH	SIZE	SP	NO.	SIZE	SP	NO.	SIZE	SP	NO.	SIZE	SP	NO.	SIZE	SP	NO.	SIZE	SP	NO.
0	4	9	11'-9	6	7.5	11'-9	4	9	28	4	9	30	5	12	22	4	17	20	5	12	11	4	17	10
1	4	9	11'-10	5	6	11'-10	4	9	28	4	9	30	5	12	22	4	17	20	5	12	11	4	17	10
2	4	9	11'-6	5	4.5	11'-6	4	9	28	4	9	30	5	12	22	4	17	20	5	12	11	4	17	10
3-6	4	9	11'-5	5	6	11'-5	4	9	28	4	9	30	5	12	22	4	17	20	5	12	11	4	17	10
7-8	4	6	11'-5	5	6	11'-5	4	9	28	4	9	30	5	12	22	4	17	20	5	12	11	4	17	10
9-10	4	9	11'-7	5	6	11'-7	4	9	28	4	9	30	5	12	22	4	17	20	5	12	11	4	17	10
11-12	4	9	11'-9	5	6	11'-9	4	9	28	4	9	30	5	12	22	4	17	20	5	12	11	4	17	10
13-15	4	6	12'-0	5	6	12'-0	4	9	28	4	9	30	5	12	22	4	17	20	5	12	11	4	17	10
16-17	7	12	12'-2	5	6	12'-2	4	9	28	4	9	30	5	12	22	4	17	20	5	12	11	4	17	10
18-19	5	12	12'-4	5	6	12'-4	4	9	28	4	9	30	5	12	22	4	17	20	5	12	11	4	17	10
20-21	5	12	12'-7	5	6	12'-7	4	9	28	4	9	30	5	12	22	4	17	20	5	12	11	4	17	10
22-23	5	12	12'-9	5	6	12'-9	4	9	28	4	9	30	5	12	22	4	17	20	5	12	11	4	17	10
24-25	5	12	12'-11	5	6	12'-11	4	9	28	4	9	30	5	12	22	4	17	20	5	12	11	4	17	10

FILL	4f1			4f2			4f3			4f4			k1			k2			k3			k4					k5				
	SIZE	SP	NO.	SIZE	SP	NO.	SIZE	SP	NO.	SIZE	SP	NO.	SIZE	SP	LENGTH	SIZE	SP	LENGTH	SIZE	SP	LENGTH	SIZE	SP	LENGTH	h	v	SIZE	SP	LENGTH	h	v
0	4	12	26	4	17	20	4	12	13	4	17	10	4	9	39'-0	5	9	10'-10	5	9	10'-3	4	9	4'-6	1'-10	2'-8	5	9	4'-8	2'-0	2'-8
1	4	12	26	4	17	20	4	12	13	4	17	10	4	9	39'-0	5	9	10'-6	5	9	9'-9	5	12	4'-8	2'-1	2'-7	5	12	4'-3	1'-8	2'-7
2	4	12	26	4	17	20	4	12	13	4	17	10	6	12	39'-0	6	12	9'-0	5	12	7'-6	5	9	5'-1	2'-5	2'-8	5	9	4'-8	2'-0	2'-8
3-6	4	12	26	4	17	20	4	12	13	4	17	10	4	9	39'-0	5	9	8'-0	4	9	6'-7	5	12	5'-2	2'-7	2'-7	6	12	4'-7	2'-0	2'-7
7-8	4	12	26	4	17	20	4	12	13	4	17	10	5	12	39'-0	6	12	8'-1	5	12	6'-9	5	12	5'-3	2'-8	2'-7	6	12	4'-8	2'-1	2'-7
9-10	4	12	26	4	17	20	4	12	13	4	17	10	5	9	39'-0	5	9	7'-5	4	9	5'-2	5	9	5'-1	2'-5	2'-8	5	9	4'-9	2'-1	2'-8
11-12	4	12	26	4	17	20	4	12	13	4	17	10	5	9	39'-0	5	9	7'-7	4	9	5'-2	5	9	4'-11	2'-3	2'-8	5	9	4'-8	2'-0	2'-8
13-15	4	12	26	4	17	20	4	12	13	4	17	10	6	12	39'-0	6	12	8'-1	4	12	4'-4	5	9	4'-11	2'-3	2'-8	5	9	4'-7	1'-11	2'-8
16-17	4	12	26	4	17	20	4	12	13	4	17	10	6	12	39'-0	6	12	8'-2	4	12	4'-6	5	9	5'-0	2'-4	2'-8	5	9	4'-7	1'-11	2'-8
18-19	4	12	26	4	17	20	4	12	13	4	17	10	6	12	39'-0	6	12	8'-2	4	12	4'-8	7	15	5'-10	2'-7	3'-3	7	15	5'-6	2'-3	3'-3
20-21	4	12	26	4	17	20	4	12	13	4	17	10	6	12	39'-0	6	12	8'-6	4	12	4'-2	5	9	7'-0	3'-11	3'-1	6	9	5'-10	2'-9	3'-1
22-23	4	12	26	4	17	20	4	12	13	4	17	10	7	15	39'-0	7	15	8'-8	4	15	4'-0	5	9	7'-1	4'-0	3'-1	6	9	5'-10	2'-9	3'-1
24-25	4	12	26	4	17	20	4	12	13	4	17	10	7	15	39'-0	7	15	8'-11	4	15	4'-0	6	9	7'-2	4'-1	3'-1	6	9	5'-10	2'-9	3'-1

REINFORCING BAR LIST

FILL	k6			k7			k9			m1			m2			m3		
	SIZE	SP	LENGTH	SIZE	SP	LENGTH	SIZE	SP	LENGTH	SIZE	SP	LENGTH	SIZE	SP	LENGTH	SIZE	SP	LENGTH
0	4	12	39'-0	5	12	6'-5	4	4.5	39'-0	4	12	39'-6	5	12	8'-0	4	12	7'-3
1	5	12	33'-4	5	12	5'-6	5	4.5	39'-0	4	9	39'-6	4	9	7'-1	4	9	6'-1
2	6	12	32'-1	6	12	5'-7	6	4.5	39'-0	5	9	39'-6	5	9	7'-1	4	9	4'-8
3-6	6	12	30'-0	6	12	5'-0	6	4.5	39'-0	5	12	39'-6	6	12	8'-0	5	12	6'-3
7-8	5	9	29'-10	6	9	5'-4	5	4.5	39'-0	5	9	39'-6	5	9	7'-3	4	9	5'-3
9-10	6	12	29'-11	7	12	5'-6	6	4.5	39'-0	5	9	39'-6	5	9	7'-5	4	9	5'-2
11-12	6	9	29'-8	6	9	4'-7	6	4.5	39'-0	6	12	39'-6	6	12	7'-11	4	12	4'-11
13-15	6	9	29'-8	6	9	4'-10	6	4.5	39'-0	6	12	39'-6	6	12	8'-1	4	12	4'-10
16-17	6	9	29'-7	6	9	4'-8	6	4.5	39'-0	7	15	39'-6	7	15	8'-6	4	15	4'-0
18-19	6	9	29'-7	6	9	4'-9	6	4.5	39'-0	7	15	39'-6	7	15	8'-6	4	15	4'-0
20-21	7	15	29'-11	8	15	6'-10	7	7.5	39'-0	7	15	39'-6	7	15	8'-7	4	15	4'-0
22-23	7	15	29'-10	8	15	6'-10	7	7.5	39'-0	7	15	39'-6	7	15	8'-9	4	15	4'-0
24-25	7	15	29'-10	8	15	6'-10	7	7.5	39'-0	7	15	39'-6	7	15	8'-11	4	15	4'-0

FILL	m4					m5					m6			m7			m9		
	SIZE	SP	LENGTH	h	v	SIZE	SP	LENGTH	h	v	SIZE	SP	LENGTH	SIZE	SP	LENGTH	SIZE	SP	LENGTH
0	4	9	13'-11	2'-8	11'-3	5	9	13'-2	1'-11	11'-3	5	12	30'-9	5	12	4'-2	5	4.5	39'-6
1	5	12	14'-3	2'-11	11'-4	6	12	13'-2	1'-10	11'-4	4	9	30'-4	5	9	4'-10	4	4.5	39'-6
2	5	9	13'-6	2'-6	11'-0	5	9	12'-11	1'-11	11'-0	6	12	30'-7	7	12	5'-2	6	4.5	39'-6
3-6	5	12	13'-6	2'-7	10'-11	6	12	12'-10	1'-11	10'-11	5	9	30'-0	6	9	5'-0	5	4.5	39'-6
7-8	5	12	13'-5	2'-6	10'-11	6	12	12'-10	1'-11	10'-11	6	12	30'-2	7	12	5'-4	6	4.5	39'-6
9-10	5	9	13'-5	2'-4	11'-1	5	9	13'-0	1'-11	11'-1	6	12	30'-1	7	12	5'-5	6	4.5	39'-6
11-12	5	9	13'-5	2'-2	11'-3	5	9	13'-2	1'-11	11'-3	6	9	29'-11	6	9	4'-7	6	4.5	39'-6
13-15	5	9	13'-10	2'-4	11'-6	5	9	13'-5	1'-11	11'-6	6	9	29'-10	6	9	4'-7	6	4.5	39'-6
16-17	5	9	14'-7	2'-11	11'-8	5	9	13'-7	1'-11	11'-8	7	15	30'-2	8	15	5'-9	7	7.5	39'-6
18-19	7	15	14'-11	3'-1	11'-10	7	15	14'-1	2'-3	11'-10	7	15	30'-2	8	15	5'-10	7	7.5	39'-6
20-21	5	9	15'-2	3'-1	12'-1	6	9	14'-3	2'-2	12'-1	7	15	30'-1	8	15	5'-10	7	7.5	39'-6
22-23	5	9	15'-6	3'-3	12'-3	6	9	14'-5	2'-2	12'-3	7	15	30'-1	8	15	5'-10	7	7.5	39'-6
24-25	6	9	15'-9	3'-4	12'-5	6	9	14'-7	2'-2	12'-5	7	15	30'-2	8	15	5'-11	7	7.5	39'-6

DIMENSIONS

FILL	S	H	A	B	C	*D	*E	*F	*G	*J
0	12	10	11	11	10	9	4.5	4.5	12	12
1	12	10	11.5	11.5	10	9	4.5	9	12	12
2	12	10	9.5	10	10	9	4.5	4.5	12	12
3-6	12	10	8	10	10	9	4.5	9	12	12
7-8	12	10	8	10.5	10	6	4.5	9	12	12
9-10	12	10	9	11.5	10	9	4.5	4.5	12	12
11-12	12	10	10	12.5	10	9	4.5	4.5	12	12
13-15	12	10	11.5	14	10	6	4.5	4.5	12	12
16-17	12	10	12.5	15	10	9	4.5	4.5	12	18
18-19	12	10	13.5	16	10	9	4.5	7.5	12	18
20-21	12	10	15	17	10	9	4.5	4.5	18	18
22-23	12	10	16	18.5	10	9	7.5	4.5	18	18
24-25	12	10	17	19.5	10	9	7.5	4.5	18	18

DIMENSIONS

FILL	*K	*L	R	T	U	V	W	X	Y	Z
0	4.5	3	1'-4	1'-6	3'-3	——	2'-11	2'-10	4'-7	2'-1
1	4.5	3	1'-6	1'-8	2'-9	7'-5	3'-5	3'-5	4'-2	2'-5
2	4.5	3	2'-8	2'-5	2'-10	6'-2	3'-4	4'-1	4'-5	2'-7
3-6	4.5	3	3'-2	2'-10	2'-6	4'-1	2'-11	3'-4	3'-10	2'-6
7-8	4.5	3	3'-0	2'-10	2'-8	3'-11	3'-4	3'-10	4'-0	2'-8
9-10	4.5	3	3'-10	3'-3	2'-9	4'-0	3'-4	3'-10	3'-11	2'-9
11-12	4.5	3	3'-10	3'-3	2'-4	3'-9	3'-2	4'-0	3'-9	2'-4
13-15	4.5	3	4'-3	3'-1	2'-5	3'-9	3'-2	4'-0	3'-8	2'-4
16-17	7.5	3	4'-2	3'-1	2'-4	3'-8	3'-0	4'-5	4'-0	2'-11
18-19	7.5	3	4'-1	3'-2	2'-5	3'-8	3'-0	4'-5	4'-0	2'-11
20-21	7.5	3	4'-4	3'-0	3'-5	4'-0	3'-0	4'-5	3'-11	2'-11
22-23	7.5	3	4'-5	3'-0	3'-5	3'-11	2'-11	4'-5	3'-11	2'-11
24-25	7.5	3	4'-5	2'-10	3'-5	3'-11	2'-11	4'-5	4'-0	3'-0

BENT BAR DETAILS

BARS	D
4	3
5	$3\frac{3}{4}$
6	$4\frac{1}{2}$
7	$5\frac{1}{4}$

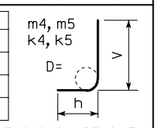

NOTE: ALL DIMENSIONS ARE OUT TO OUT D = PIN DIAMETER

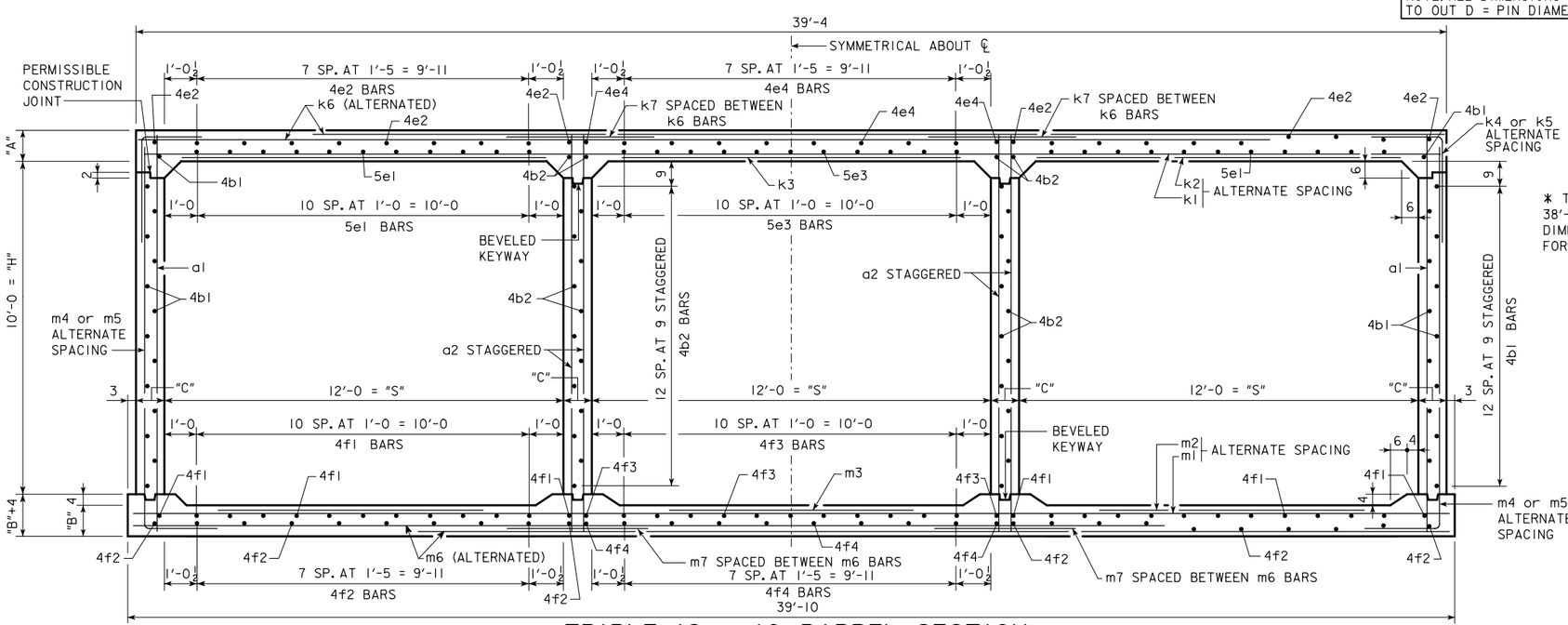

TRIPLE 12 x 10 BARREL SECTION

* THESE DIMENSIONS ARE CORRECT FOR 38'-0 LONG STANDARD SECTIONS ONLY. DIMENSIONS MUST BE RECALCULATED FOR ALL OTHER SECTION LENGTHS.

QUANTITIES

FILL	CONCRETE CU YD/FT				STEEL
	SLAB	FLOOR	WALL	TOTAL	LBS/FT
0	1.424	1.435	1.182	4.041	508.87
1	1.484	1.497	1.182	4.163	516.11
2	1.242	1.312	1.182	3.736	638.68
3-6	1.059	1.312	1.182	3.553	559.66
7-8	1.059	1.374	1.182	3.615	595.84
9-10	1.181	1.497	1.182	3.860	611.82
11-12	1.302	1.620	1.182	4.104	641.42
13-15	1.484	1.804	1.182	4.470	664.24
16-17	1.606	1.927	1.182	4.715	690.61
18-19	1.727	2.050	1.182	4.959	695.24
20-21	1.909	2.173	1.182	5.264	706.53
22-23	2.031	2.357	1.182	5.570	717.08
24-25	2.152	2.480	1.182	5.814	750.16

DIMENSIONS LISTED ON THIS SHEET TO BE USED IN CONJUNCTION WITH SHEET TRRCB 2-01.

LATEST REVISION DATE :

APPROVED BY :

STANDARD DESIGN

CULVERT BARREL DETAILS

FOR

TRIPLE REINFORCED CONCRETE BOX CULVERTS

IOWA DEPARTMENT OF TRANSPORTATION - HIGHWAY DIVISION

SEPT., 2001

TRRCB 12-10-01

TRB 12-10-01 - 09-01 THIS SHEET ISSUED.

VARIABLE DIMENSIONS AND QUANTITIES FOR TRIPLE 12 x 12 BARREL SECTIONS

REINFORCING BAR LIST

FILL	a1			a2			4b1			4b2			5e1			4e2			5e3			4e4		
	SIZE	SP	LENGTH	SIZE	SP	LENGTH	SIZE	SP	NO.	SIZE	SP	NO.	SIZE	SP	NO.	SIZE	SP	NO.	SIZE	SP	NO.	SIZE	SP	NO.
0	4	6	13'-9	7	9	13'-9	4	9	32	4	9	34	5	12	22	4	17	20	5	12	11	4	17	10
1	4	9	13'-10	7	9	13'-10	4	9	32	4	9	34	5	12	22	4	17	20	5	12	11	4	17	10
2	4	9	13'-6	7	9	13'-6	4	9	32	4	9	34	5	12	22	4	17	20	5	12	11	4	17	10
3-6	4	9	13'-5	7	9	13'-5	4	9	32	4	9	34	5	12	22	4	17	20	5	12	11	4	17	10
7-8	4	9	13'-5	7	9	13'-5	4	9	32	4	9	34	5	12	22	4	17	20	5	12	11	4	17	10
9-10	4	6	13'-7	7	9	13'-7	4	9	32	4	9	34	5	12	22	4	17	20	5	12	11	4	17	10
11-12	5	12	13'-9	7	9	13'-9	4	9	32	4	9	34	5	12	22	4	17	20	5	12	11	4	17	10
13-15	4	6	14'-0	7	9	14'-0	4	9	32	4	9	34	5	12	22	4	17	20	5	12	11	4	17	10
16-17	4	6	14'-2	7	9	14'-2	4	9	32	4	9	34	5	12	22	4	17	20	5	12	11	4	17	10
18-19	6	9	14'-4	7	9	14'-4	4	9	32	4	9	34	5	12	22	4	17	20	5	12	11	4	17	10
20-21	4	6	14'-6	7	9	14'-6	4	9	32	4	9	34	5	12	22	4	17	20	5	12	11	4	17	10
22-23	4	6	14'-8	7	9	14'-8	4	9	32	4	9	34	5	12	22	4	17	20	5	12	11	4	17	10
24-25	4	6	14'-11	7	9	14'-11	4	9	32	4	9	34	5	12	22	4	17	20	5	12	11	4	17	10

FILL	4f1			4f2			4f3			4f4			k1			k2			k3			k4					k5				
	SIZE	SP	NO.	SIZE	SP	NO.	SIZE	SP	NO.	SIZE	SP	NO.	SIZE	SP	LENGTH	SIZE	SP	LENGTH	SIZE	SP	LENGTH	SIZE	SP	LENGTH	h	v	SIZE	SP	LENGTH	h	v
0	4	12	26	4	17	20	4	12	13	4	17	10	4	9	39'-8	5	9	10'-9	5	9	10'-4	6	18	5'-6	2'-3	3'-3	6	18	5'-4	2'-1	3'-3
1	4	12	26	4	17	20	4	12	13	4	17	10	4	9	39'-8	5	9	10'-5	5	9	9'-11	6	15	4'-8	2'-1	2'-7	6	15	4'-8	2'-1	2'-7
2	4	12	26	4	17	20	4	12	13	4	17	10	5	9	39'-8	5	9	8'-8	5	9	7'-10	5	9	5'-7	2'-11	2'-8	5	9	4'-10	2'-2	2'-8
3-6	4	12	26	4	17	20	4	12	13	4	17	10	5	12	39'-8	5	12	7'-3	5	12	6'-5	4	9	5'-7	2'-11	2'-8	5	9	4'-11	2'-3	2'-8
7-8	4	12	26	4	17	20	4	12	13	4	17	10	5	12	39'-8	6	12	7'-11	5	12	6'-10	5	9	5'-9	3'-1	2'-8	5	9	4'-11	2'-3	2'-8
9-10	4	12	26	4	17	20	4	12	13	4	17	10	5	12	39'-8	6	12	8'-1	5	12	6'-9	5	9	5'-8	3'-0	2'-8	5	9	4'-11	2'-3	2'-8
11-12	4	12	26	4	17	20	4	12	13	4	17	10	5	9	39'-8	5	9	7'-5	4	9	5'-3	6	12	5'-7	3'-0	2'-7	6	12	4'-8	2'-1	2'-7
13-15	4	12	26	4	17	20	4	12	13	4	17	10	5	9	39'-8	5	9	7'-7	4	9	5'-6	7	15	6'-1	2'-10	3'-3	7	15	5'-9	2'-6	3'-3
16-17	4	12	26	4	17	20	4	12	13	4	17	10	5	9	39'-8	5	9	7'-9	4	9	5'-5	7	15	6'-4	3'-1	3'-3	7	15	5'-8	2'-5	3'-3
18-19	4	12	26	4	17	20	4	12	13	4	17	10	5	9	39'-8	5	9	8'-1	4	9	5'-6	7	15	6'-4	3'-1	3'-3	7	15	5'-8	2'-5	3'-3
20-21	4	12	26	4	17	20	4	12	13	4	17	10	6	12	39'-8	6	12	8'-4	4	12	5'-5	7	15	7'-3	3'-1	4'-2	8	15	7'-2	3'-0	4'-2
22-23	4	12	26	4	17	20	4	12	13	4	17	10	6	12	39'-8	6	12	8'-6	4	12	5'-6	7	15	8'-1	3'-11	4'-2	8	15	8'-0	3'-10	4'-2
24-25	4	12	26	4	17	20	4	12	13	4	17	10	6	12	39'-8	6	12	8'-8	4	12	5'-8	7	12	7'-3	4'-0	3'-3	7	12	6'-4	3'-1	3'-3

REINFORCING BAR LIST

FILL	k6			k7			k9			m1			m2			m3			m4					m5					m6			m7			m9		
	SIZE	SP	LENGTH	SIZE	SP	LENGTH	SIZE	SP	LENGTH	SIZE	SP	LENGTH	SIZE	SP	LENGTH	SIZE	SP	LENGTH	SIZE	SP	LENGTH	h	v	SIZE	SP	LENGTH	h	v	SIZE	SP	LENGTH	SIZE	SP	LENGTH	SIZE	SP	LENGTH
0	5	15	39'-8	5	15	5'-8	5	7.5	39'-8	4	12	40'-2	5	12	7'-10	4	12	7'-2	6	18	16'-7	3'-4	13'-3	7	18	15'-8	2'-5	13'-3	5	12	31'-0	5	12	4'-4	5	4.5	40'-2
1	4	9	39'-8	4	9	5'-6	4	4.5	39'-8	5	15	40'-2	5	15	7'-4	4	15	5'-2	6	15	16'-7	3'-3	13'-4	6	15	15'-4	2'-0	13'-4	5	12	30'-9	5	12	4'-4	5	4.5	40'-2
2	5	9	32'-3	5	9	5'-4	5	4.5	39'-8	5	9	40'-2	5	9	7'-0	4	9	4'-7	5	9	16'-1	3'-1	13'-0	5	9	15'-1	2'-1	13'-0	6	12	31'-0	7	12	5'-3	6	4.5	40'-2
3-6	5	9	30'-3	5	9	4'-10	5	4.5	39'-8	5	12	40'-2	6	12	7'-10	5	12	6'-10	5	9	16'-0	3'-1	12'-11	5	9	15'-0	2'-1	12'-11	5	9	30'-5	6	9	5'-1	5	4.5	40'-2
7-8	5	9	30'-3	6	9	5'-5	5	4.5	39'-8	5	9	40'-2	5	9	7'-1	4	9	5'-9	5	9	15'-11	3'-0	12'-11	5	9	15'-0	2'-1	12'-11	6	12	30'-7	7	12	5'-5	6	4.5	40'-2
9-10	5	9	30'-2	6	9	5'-5	5	4.5	39'-8	5	9	40'-2	5	9	7'-3	4	9	5'-3	5	9	16'-0	2'-11	13'-1	5	9	15'-2	2'-1	13'-1	6	12	30'-7	7	12	5'-6	6	4.5	40'-2
11-12	6	12	30'-4	7	12	5'-7	6	4.5	39'-8	5	9	40'-2	5	9	7'-5	4	9	5'-4	6	12	16'-3	3'-0	13'-3	6	12	15'-3	2'-0	13'-3	6	12	30'-6	7	12	5'-6	6	4.5	40'-2
13-15	6	9	30'-2	6	9	4'-9	6	4.5	39'-8	6	12	40'-2	6	12	7'-11	4	12	5'-3	7	15	16'-4	2'-10	13'-6	7	15	15'-11	2'-5	13'-6	6	9	30'-4	6	9	4'-9	6	4.5	40'-2
16-17	7	15	30'-5	8	15	5'-10	7	7.5	39'-8	6	12	40'-2	6	12	8'-0	4	12	5'-4	7	15	16'-7	2'-11	13'-8	7	15	16'-1	2'-5	13'-8	7	15	30'-8	8	15	5'-10	7	7.5	40'-2
18-19	7	15	30'-5	8	15	5'-11	7	7.5	39'-8	6	12	40'-2	6	12	8'-1	4	12	5'-6	7	15	16'-11	3'-1	13'-10	7	15	16'-3	2'-5	13'-10	7	15	30'-7	8	15	5'-10	7	7.5	40'-2
20-21	7	15	30'-4	8	15	5'-11	7	7.5	39'-8	7	15	40'-2	7	15	8'-6	4	15	5'-3	7	15	17'-1	3'-1	14'-0	8	15	17'-0	3'-0	14'-0	7	15	30'-7	8	15	5'-11	7	7.5	40'-2
22-23	7	15	30'-4	8	15	7'-0	7	7.5	39'-8	7	15	40'-2	7	15	8'-7	4	15	5'-5	7	15	17'-4	3'-2	14'-2	8	15	17'-2	3'-0	14'-2	7	15	30'-7	8	15	5'-11	7	7.5	40'-2
24-25	7	15	30'-4	8	15	7'-0	7	7.5	39'-8	7	15	40'-2	7	15	8'-11	4	15	5'-4	7	12	18'-5	4'-0	14'-5	7	12	16'-10	2'-5	14'-5	8	18	30'-7	8	18	5'-8	8	4.5	40'-2

DIMENSIONS

FILL	S	H	A	B	C	*D	*E	*F	*G	*J
0	12	12	11	11	12	6	4.5	9	18	12
1	12	12	11.5	12	12	9	4.5	7.5	12	12
2	12	12	9.5	10	12	9	4.5	4.5	12	12
3-6	12	12	8	10	12	9	4.5	4.5	12	12
7-8	12	12	8	10.5	12	9	4.5	4.5	12	12
9-10	12	12	9	11.5	12	6	4.5	4.5	12	12
11-12	12	12	10	12.5	12	9	4.5	9	12	12
13-15	12	12	11.5	14	12	6	4.5	7.5	12	12
16-17	12	12	12.5	15	12	6	4.5	7.5	18	18
18-19	12	12	13.5	16	12	9	4.5	7.5	18	18
20-21	12	12	14.5	17	12	6	4.5	7.5	18	18
22-23	12	12	15.5	18	12	6	4.5	7.5	18	18
24-25	12	12	16.5	19.5	12	6	4.5	9	18	12

DIMENSIONS

FILL	*K	*L	R	T	U	V	W	X	Y	Z
0	4.5	3	1'-4	1'-6	2'-10	——	2'-11	2'-11	4'-5	2'-2
1	7.5	3	1'-7	1'-8	2'-9	——	3'-3	3'-11	4'-2	2'-2
2	4.5	3	2'-7	2'-7	2'-8	5'-11	3'-4	4'-3	4'-5	2'-8
3-6	4.5	3	3'-3	3'-2	2'-5	3'-11	2'-11	3'-1	3'-10	2'-7
7-8	4.5	3	3'-1	2'-10	2'-9	3'-11	3'-4	3'-8	4'-0	2'-9
9-10	4.5	3	3'-1	2'-10	2'-9	3'-10	3'-4	3'-10	4'-0	2'-9
11-12	4.5	3	3'-10	3'-3	2'-10	4'-0	3'-3	3'-10	3'-11	2'-9
13-15	4.5	3	3'-9	3'-3	2'-5	3'-10	3'-2	3'-11	3'-9	2'-5
16-17	4.5	3	3'-10	3'-3	2'-11	4'-1	3'-2	3'-10	4'-1	2'-11
18-19	4.5	3	3'-9	3'-1	3'-0	4'-1	3'-2	3'-9	4'-0	2'-11
20-21	7.5	3	3'-10	3'-1	3'-0	4'-0	3'-0	3'-10	4'-0	3'-0
22-23	7.5	3	3'-9	3'-0	3'-6	4'-0	3'-0	3'-10	4'-0	3'-0
24-25	7.5	3	3'-8	3'-0	3'-6	4'-0	2'-10	3'-10	4'-0	2'-10

* THESE DIMENSIONS ARE CORRECT FOR 38'-0 LONG STANDARD SECTIONS ONLY. DIMENSIONS MUST BE RECALCULATED FOR ALL OTHER SECTION LENGTHS.

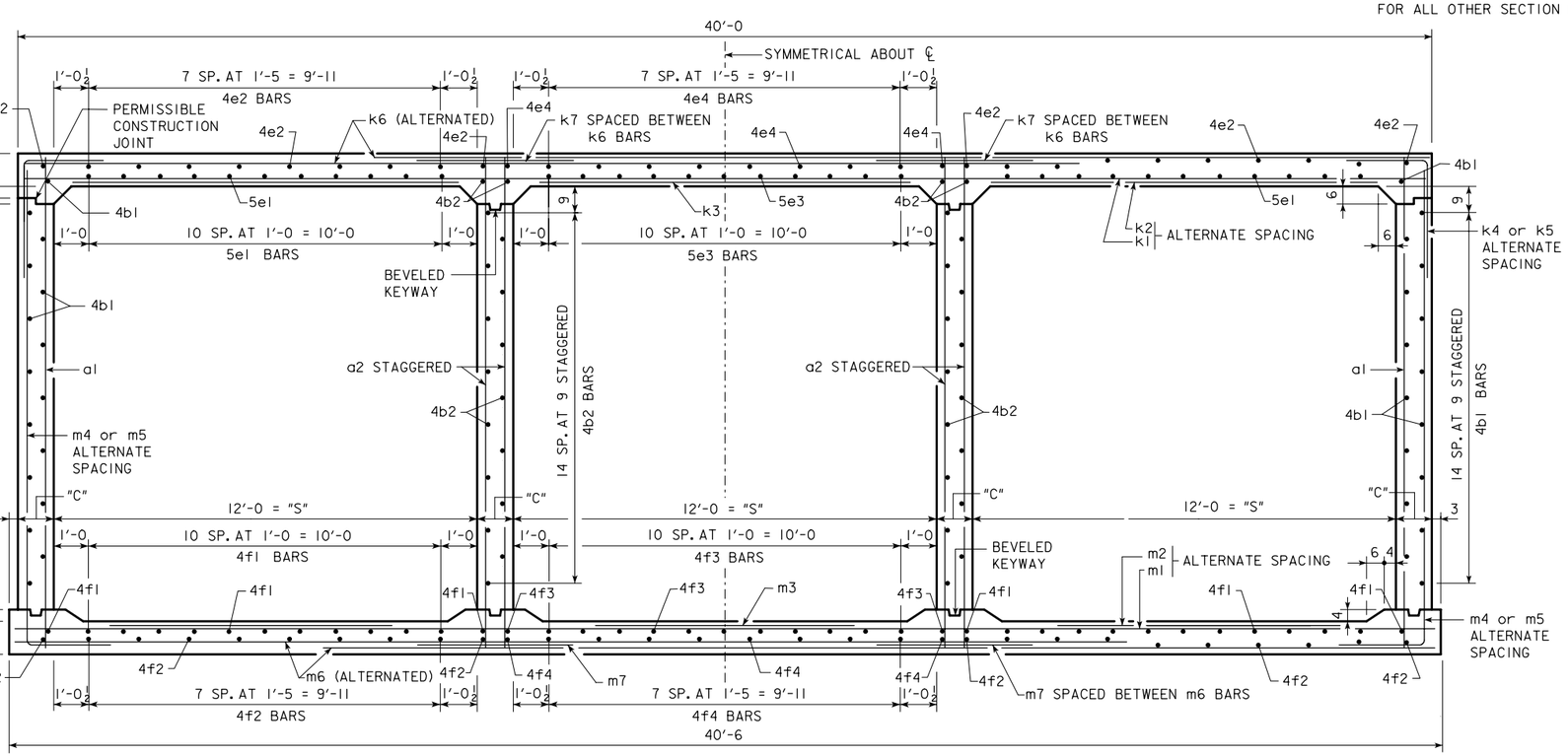

TRIPLE 12 x 12 BARREL SECTION

BENT BAR DETAILS

BARS	D
4	3
5	3¾
6	4½
7	5¼
8	6

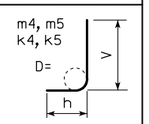

NOTE: ALL DIMENSIONS ARE OUT TO OUT D = PIN DIAMETER

QUANTITIES

FILL	CONCRETE CU YD/FT				STEEL
	SLAB	FLOOR	WALL	TOTAL	LBS/FT
0	1.461	1.460	1.717	4.638	569.95
1	1.522	1.585	1.717	4.824	561.45
2	1.276	1.335	1.717	4.328	662.13
3-6	1.090	1.335	1.717	4.142	612.08
7-8	1.090	1.397	1.717	4.204	649.71
9-10	1.214	1.522	1.717	4.453	663.89
11-12	1.337	1.647	1.717	4.701	680.61
13-15	1.522	1.835	1.717	5.074	741.13
16-17	1.646	1.960	1.717	5.323	737.66
18-19	1.769	2.085	1.717	5.571	761.66
20-21	1.893	2.210	1.717	5.820	793.29
22-23	2.016	2.335	1.717	6.068	807.58
24-25	2.140	2.522	1.717	6.379	823.00

DIMENSIONS LISTED ON THIS SHEET TO BE USED IN CONJUNCTION WITH SHEET TRRCB 2-01.

LATEST REVISION DATE :

APPROVED BY :

STANDARD DESIGN

CULVERT BARREL DETAILS

FOR

TRIPLE REINFORCED CONCRETE BOX CULVERTS

IOWA DEPARTMENT OF TRANSPORTATION - HIGHWAY DIVISION

SEPT., 2001

TRRCB 12-12-01

TRB 12-12-01 - 09-01 THIS SHEET ISSUED.

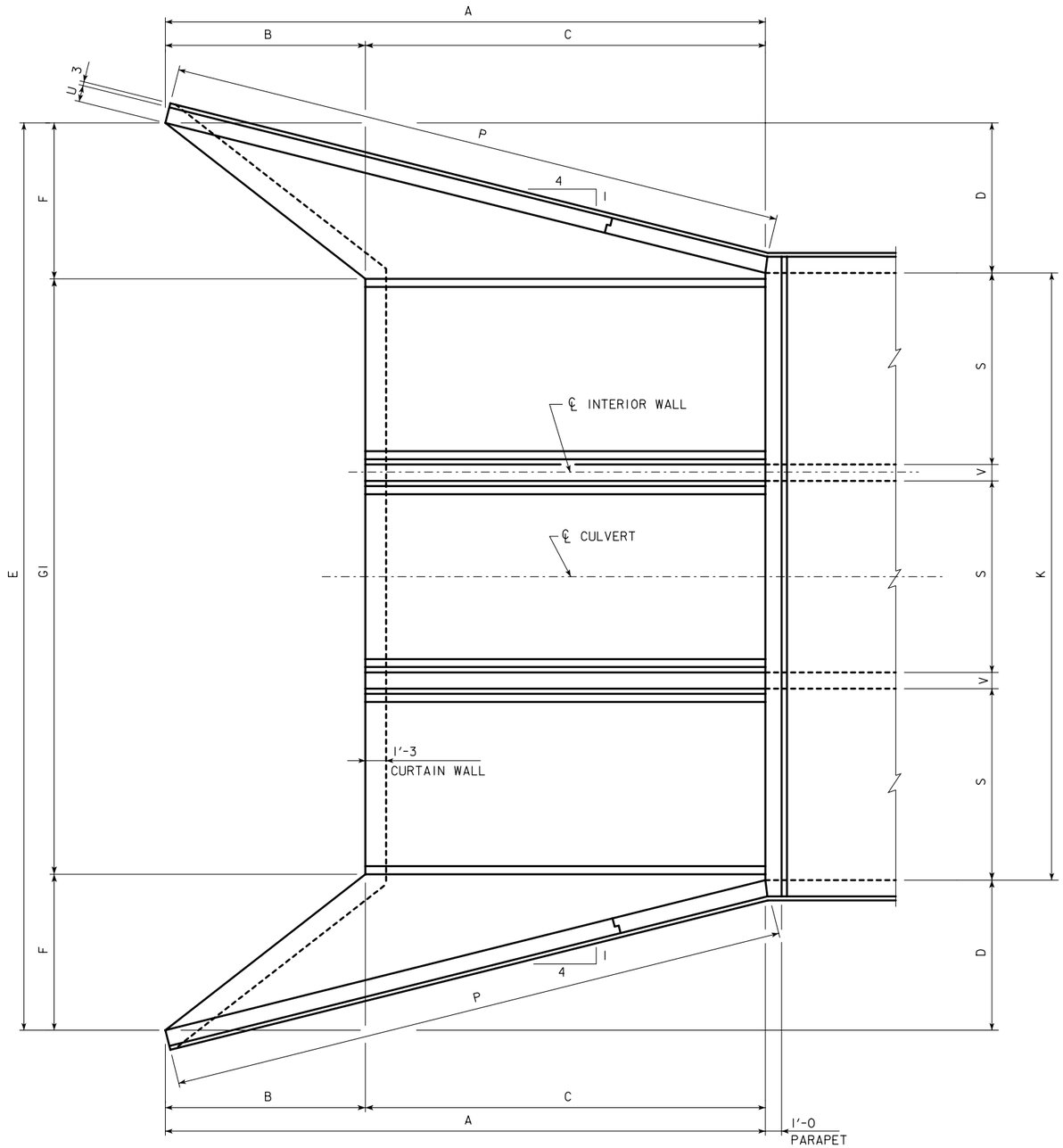

PLAN VIEW

DIMENSIONS TABLE

SxH	12' x 12'	12' x 10'	12' x 8'	12' x 6'	10' x 12'	10' x 10'	10' x 8'	10' x 6'	SxH
A	37'-0	31'-0	25'-0	19'-0	37'-0	31'-0	25'-0	19'-0	A
B	12'-4	10'-4	8'-4	6'-4	12'-4	10'-4	8'-4	6'-4	B
C	24'-8	20'-8	16'-8	12'-8	24'-8	20'-8	16'-8	12'-8	C
D	9'-3	7'-9	6'-3	4'-9	9'-3	7'-9	6'-3	4'-9	D
E	56'-6	53'-2	50'-2	47'-0	50'-6	47'-2	44'-2	41'-0	E
F	9'-7	8'-1	6'-7	5'-1	9'-7	8'-1	6'-7	5'-1	F
G1	37'-4	37'-0	37'-0	36'-10	31'-4	31'-0	31'-0	30'-10	G1
G2	38'-6 5/8	38'-2 5/8	38'-2 1/2	38'-0 3/8	32'-6 5/8	32'-2 5/8	32'-2 1/2	32'-0 3/8	G2
G3	15'-7 3/8	13'-1 3/8	10'-7 1/2	8'-1 1/2	15'-7 3/8	13'-1 3/8	10'-7 1/2	8'-1 1/2	G3
G4	16'-5 7/8	13'-7	11'-1 1/8	8'-4 3/4	16'-5 7/8	13'-7	11'-1 1/8	8'-4 3/4	G4
G5	0'-3 1/8	0'-7 5/8	0'-7 5/8	0'-9 3/4	0'-3 1/8	0'-7 5/8	0'-7 5/8	0'-9 3/4	G5
K	38'-0	37'-8	37'-8	37'-6	32'-0	31'-8	31'-8	31'-6	K
P	38'-1 5/8	31'-11 1/2	25'-9 1/4	19'-7	38'-1 5/8	31'-11 1/2	25'-9 1/4	19'-7	P
R1	40'-1	33'-7	27'-1	20'-7	40'-1	33'-7	27'-1	20'-7	R1
R2	27'-0 1/8	22'-6 1/2	18'-0 7/8	13'-7 3/8	27'-0 1/8	22'-6 1/2	18'-0 7/8	13'-7 3/8	R2
T	1'-2	1'-2	1'-2	1'-2	1'-1	1'-1	1'-1	1'-1	T
U	1'-0	0'-10	0'-10	0'-9	1'-0	0'-10	0'-10	0'-9	U
V	1'-0	0'-10	0'-10	0'-9	1'-0	0'-10	0'-10	0'-9	V
W	5'-0	4'-6	4'-0	3'-6	5'-0	4'-6	4'-0	3'-6	W

HEADWALL NOTES:

1. SEE SHEET TRRCB-G1-00 FOR GENERAL INFORMATION, SPECIFICATIONS, AND DESIGN STRESSES.
2. SEE SHEET TRH 0-2-01, TRH 3-01 AND TRH 4-01 FOR LOCATION OF CERTAIN DIMENSIONS TABULATED.
3. SEE SHEET TRH 0-5-01 FOR HEADWALL NOTES.

LATEST REVISION DATE :

APPROVED BY :

STANDARD DESIGN

FLARED WING HEADWALLS

FOR

TRIPLE REINFORCED CONCRETE BOX CULVERTS

IOWA DEPARTMENT OF TRANSPORTATION - HIGHWAY DIVISION

SEPT., 2001

TRH 0-1-01

TRH 0-1-01 - 09-01 THIS SHEET ISSUED.

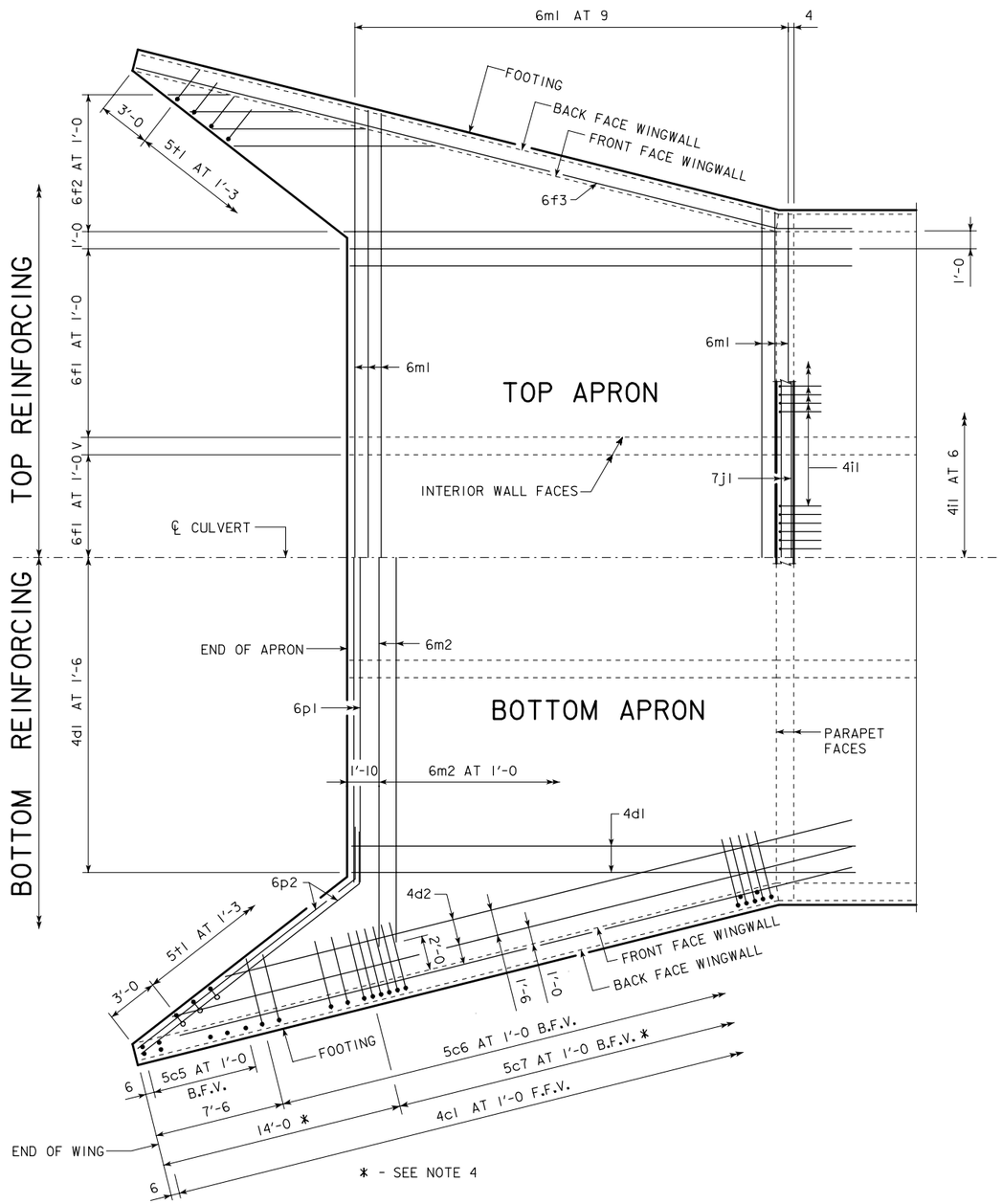

PLAN VIEW - TOP & BOTTOM OF APRON REINFORCING BARS

HEADWALL NOTES:

1. BAR SPACINGS AND POSITIONS SHOWN ARE SIMILAR FOR ALL SIZES OF HEADWALLS IN THIS STANDARD.
2. WINGWALL BARS CONSISTENTLY REFERENCED FROM END OF WING FOR ALL HEADWALLS.
3. TOP TRANSVERSE FLOOR BARS ARE 4" FROM THE BACK OF THE PARAPET FOR ALL HEADWALLS.
4. THERE ARE NO 5c7 BARS IN THE 6'-0 HEIGHT HEADWALL.
5. FOR DIMENSION TABLE SEE SHEET TRH 0-1-01.
6. FOR REINFORCING IN CURTAIN WALL SEE CURTAIN WALL DETAILS SHEET TRH 0-3-01.

LATEST REVISION DATE :

APPROVED BY :

STANDARD DESIGN

FLARED WING HEADWALLS

FOR

TRIPLE REINFORCED CONCRETE BOX CULVERTS

IOWA DEPARTMENT OF TRANSPORTATION - HIGHWAY DIVISION

SEPT., 2001

TRH 0-2-01

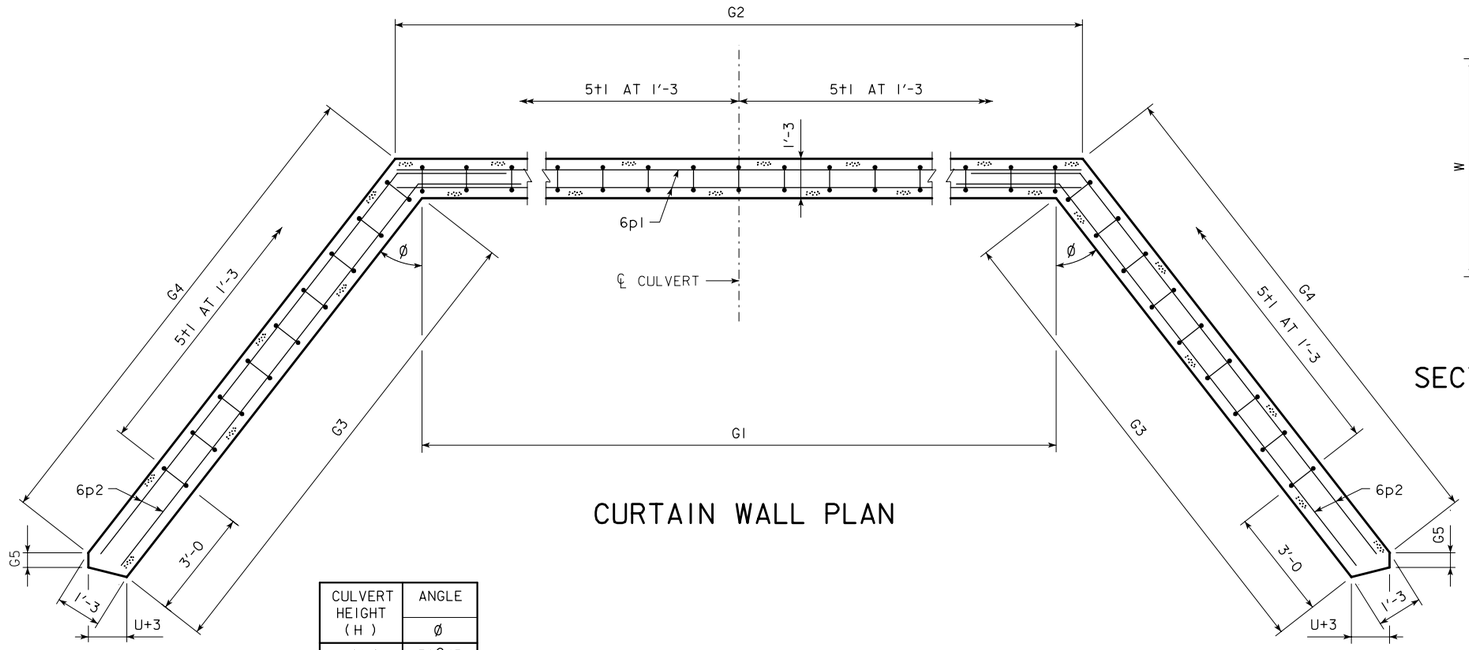

CURTAIN WALL PLAN

CULVERT HEIGHT (H)	ANGLE Ø
6'-0	38°45'
8'-0	38°19'
10'-0	38°02'
12'-0	37°51'

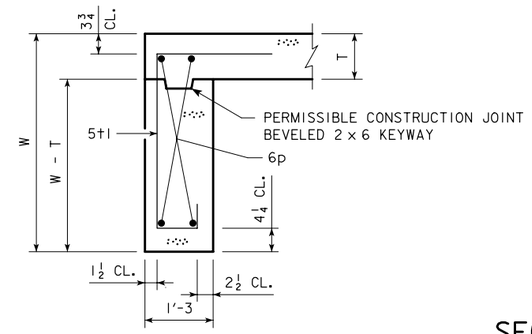

SECTION THRU CURTAIN WALL

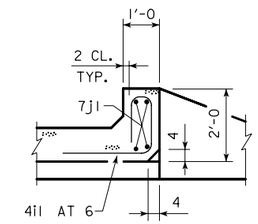

SECTION THRU PARAPET

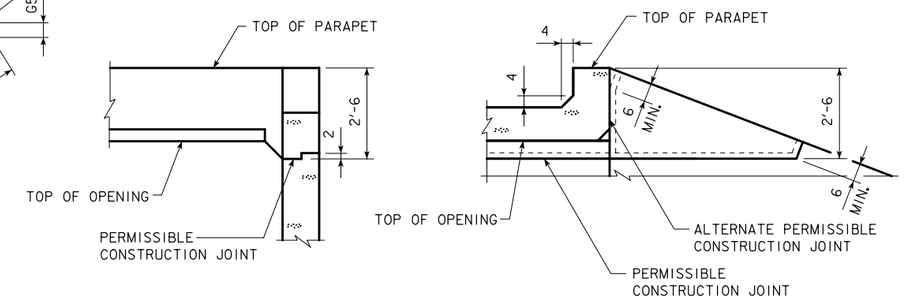

TOP OF WINGWALL DETAILS

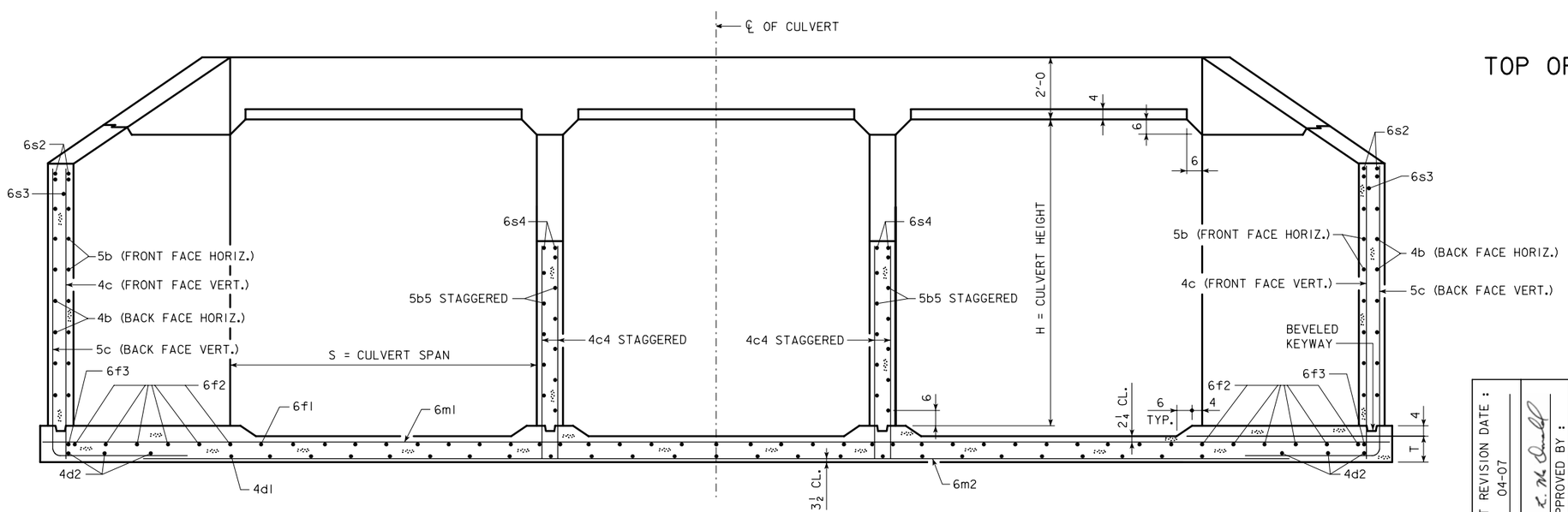

TYPICAL SECTION - NEAR CENTER OF APRON

HEADWALL NOTES:

1. SEE SHEET TRRCB-GI-01 FOR GENERAL INFORMATION, SPECIFICATIONS, AND DESIGN STRESSES.
2. FOR DIMENSION TABLE SEE SHEET TRH 0-1-01.

LATEST REVISION DATE : 04-07

APPROVED BY :

STANDARD DESIGN

FLARED WING HEADWALLS

FOR

TRIPLE REINFORCED CONCRETE BOX CULVERTS

IOWA DEPARTMENT OF TRANSPORTATION - HIGHWAY DIVISION

SEPT., 2001

TRH 0-3-01

REVISION - 04-07 - ADDED PERMISSIBLE CONSTRUCTION JOINT IN CURTAIN WALL.
TRH 0-3-01 - 09-01 THIS SHEET ISSUED.

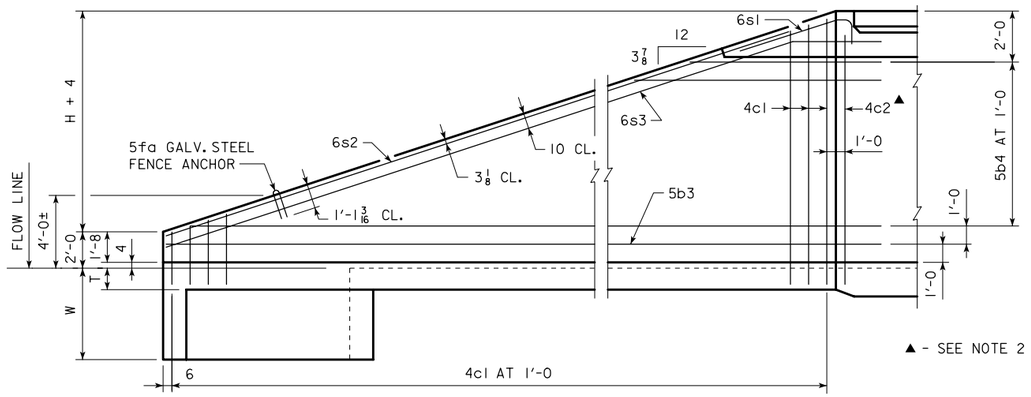

TYPICAL VIEW - FRONT FACE REINFORCING

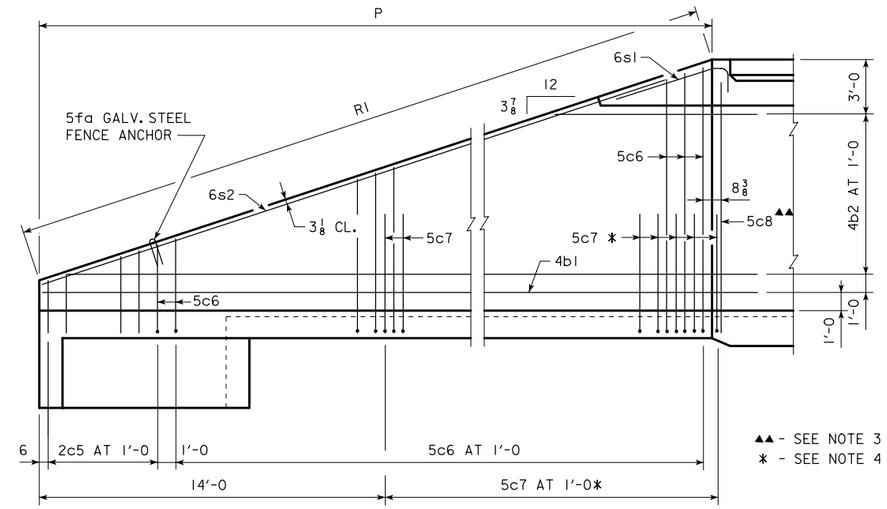

TYPICAL VIEW - BACK FACE REINFORCING

CULVERT HEIGHT (H)	SLOPE y INCHES
6'-0	4 3/4
8'-0	5 1/16
10'-0	5 1/4
12'-0	5 3/8

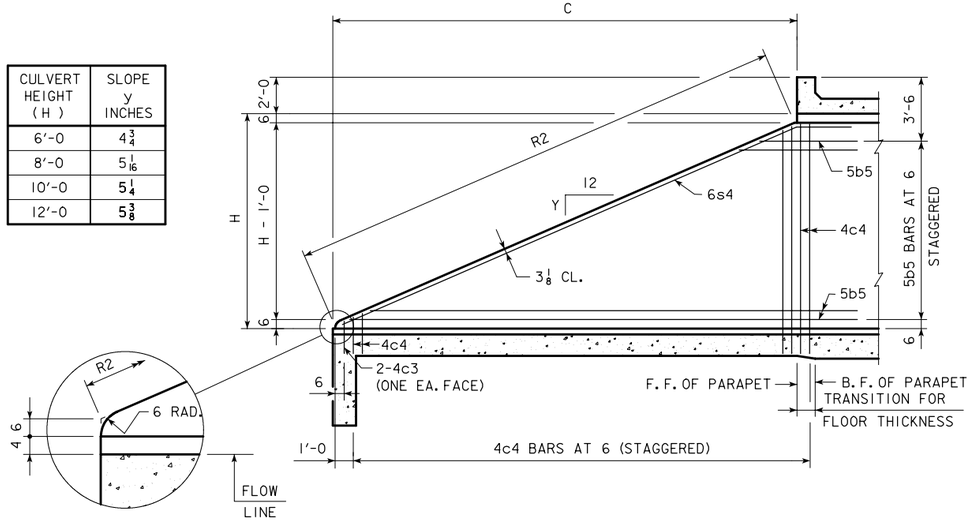

TYPICAL VIEW - INTERIOR WALL

HEADWALL NOTES:

1. BAR SPACING AND POSITIONS SHOWN ARE SIMILAR FOR ALL SIZES OF HEADWALL IN THIS STANDARD.
2. ONE 4c2 BAR, HEADWALL HEIGHTS OF 6'-0, 8'-0, 10'-0 AND 12'-0.
3. ONE 5c8 BAR, HEADWALL HEIGHTS OF 6'-0, 8'-0, 10'-0, AND 12'-0.
4. NOT APPLICABLE TO HEADWALL HEIGHT OF 6'-0.
5. FOR DIMENSION TABLE SEE SHEET TRH 0-1-01.

LATEST REVISION DATE :

APPROVED BY :

STANDARD DESIGN

FLARED WING HEADWALLS

FOR

TRIPLE REINFORCED CONCRETE BOX CULVERTS

IOWA DEPARTMENT OF TRANSPORTATION - HIGHWAY DIVISION

SEPT., 2001

TRH 0-4-01

TRH 0-4-01 - 09-01 THIS SHEET ISSUED.

BILL OF REINFORCING FOR ONE HEADWALL 0° SKEW CULVERT SPAN x CULVERT HEIGHT

BAR	LOCATION	SHAPE	12'-0 x 12'-0 NO.	LENGTH	WEIGHT	12'-0 x 10'-0 NO.	LENGTH	WEIGHT	12'-0 x 8'-0 NO.	LENGTH	WEIGHT	12'-0 x 6'-0 NO.	LENGTH	WEIGHT	10'-0 x 12'-0 NO.	LENGTH	WEIGHT	10'-0 x 10'-0 NO.	LENGTH	WEIGHT	10'-0 x 8'-0 NO.	LENGTH	WEIGHT	10'-0 x 6'-0 NO.	LENGTH	WEIGHT	BAR
5fa	FENCE ANCHOR (GALV.)		2	3'-1	6	2	3'-1	6	2	3'-1	6	2	3'-1	6	2	3'-1	6	2	3'-1	6	2	3'-1	6	2	3'-1	6	5fa
4b1	WINGWALL, B.F.H.		2	40'-11	57	2	34'-9	46	2	28'-7	38	2	22'-5	30	2	40'-11	57	2	34'-9	46	2	28'-7	38	2	22'-5	30	4b1
4b2	WINGWALL, B.F.H.		20 VAR	2 EACH 11'-8: 39'-6	342	16 VAR	2 EACH 11'-8: 33'-4	240	12 VAR	2 EACH 11'-8: 27'-2	156	8 VAR	2 EACH 11'-8: 21'-0	87	20 VAR	2 EACH 11'-8: 39'-6	342	16 VAR	2 EACH 11'-8: 33'-4	240	12 VAR	2 EACH 11'-8: 27'-2	156	8 VAR	2 EACH 11'-8: 21'-0	87	4b2
5b3	WINGWALL, F.F.H.		2	40'-11	90	2	34'-9	72	2	28'-7	60	2	22'-5	47	2	40'-11	90	2	34'-9	72	2	28'-7	60	2	22'-5	47	5b3
5b4	WINGWALL, F.F.H. LONG		22 VAR	2 EACH 8'-7: 39'-6	552	18 VAR	2 EACH 8'-7: 33'-4	393	14 VAR	2 EACH 8'-7: 27'-2	261	10 VAR	2 EACH 8'-7: 21'-0	154	22 VAR	2 EACH 8'-7: 39'-6	552	18 VAR	2 EACH 8'-7: 33'-4	393	14 VAR	2 EACH 8'-7: 27'-2	261	10 VAR	2 EACH 8'-7: 21'-0	154	5b4
5b5	INTERIOR WALLS, BOTH F. H.		42 VAR	2 EACH 4'-10: 27'-3	703	34 VAR	2 EACH 4'-10: 23'-3	498	26 VAR	2 EACH 4'-11: 19'-3	328	18 VAR	2 EACH 5'-1: 15'-3	191	42 VAR	2 EACH 4'-10: 27'-3	703	34 VAR	2 EACH 4'-10: 23'-3	498	26 VAR	2 EACH 4'-11: 19'-3	328	18 VAR	2 EACH 5'-1: 15'-3	191	5b5
4c1	WINGWALL, F.F.V.		76 VAR	2 EACH 2'-10: 14'-10	448	64 VAR	2 EACH 2'-10: 12'-11	337	52 VAR	2 EACH 2'-10: 11'-0	240	40 VAR	2 EACH 2'-10: 9'-0	158	76 VAR	2 EACH 2'-9: 14'-9	444	64 VAR	2 EACH 2'-9: 12'-10	333	52 VAR	2 EACH 2'-9: 10'-11	237	40 VAR	2 EACH 2'-9: 8'-11	156	4c1
4c2	WINGWALL, F.F.V.		4	13'-7	36	2	12'-0	16	2	10'-0	13	2	8'-0	11	4	13'-7	36	2	12'-0	16	2	10'-0	13	2	8'-0	11	4c2
4c3	INTERIOR WALLS, BOTH F. V.		4	1'-9	5	4	1'-9	5	4	1'-9	5	4	1'-9	5	4	1'-8	4	4	1'-8	4	4	1'-8	4	4	1'-8	4	4c3
4c4	INTERIOR WALLS, BOTH F. V.		100 VAR	2 EACH 2'-0: 12'-11	498	84 VAR	2 EACH 2'-0: 10'-11	362	68 VAR	2 EACH 1'-11: 8'-10	244	52 VAR	2 EACH 1'-11: 6'-10	152	100 VAR	2 EACH 1'-11: 12'-10	493	84 VAR	2 EACH 1'-11: 10'-10	358	68 VAR	2 EACH 1'-10: 8'-9	240	52 VAR	2 EACH 1'-10: 6'-9	149	4c4
5c5	WINGWALL, B.F.V.		12 VAR	2 EACH 2'-10: 4'-6	46	12 VAR	2 EACH 2'-10: 4'-6	46	12 VAR	2 EACH 2'-10: 4'-6	46	12 VAR	2 EACH 2'-10: 4'-6	46	12 VAR	2 EACH 2'-9: 4'-5	45	12 VAR	2 EACH 2'-9: 4'-5	45	12 VAR	2 EACH 2'-9: 4'-5	45	12 VAR	2 EACH 2'-9: 4'-5	45	5c5
5c6	WINGWALL, B.F.V.		64 VAR	2 EACH 8'-10: 18'-10	923	52 VAR	2 EACH 8'-10: 16'-11	698	40 VAR	2 EACH 8'-10: 15'-0	497	28 VAR	2 EACH 8'-10: 13'-0	319	64 VAR	2 EACH 8'-9: 18'-9	918	52 VAR	2 EACH 8'-9: 16'-10	694	40 VAR	2 EACH 8'-9: 14'-11	494	28 VAR	2 EACH 8'-9: 12'-11	316	5c6
5c7	WINGWALL, B.F.V.		50	10'-6	548	38	10'-6	416	26	10'-6	285	—	—	—	50	10'-6	548	38	10'-6	416	26	10'-6	285	—	—	—	5c7
5c8	WINGWALL, B.F.V.		4	17'-7	73	2	16'-11	35	2	15'-0	31	2	13'-0	27	4	17'-6	73	2	16'-10	35	2	14'-11	31	2	12'-11	27	5c8
4d1	APRON, LONGITUDINAL, BOTTOM		25	27'-6	459	25	23'-6	392	25	19'-6	326	25	15'-6	259	21	27'-6	386	21	23'-6	330	21	19'-6	274	21	15'-6	217	4d1
4d2	APRON, LONGITUDINAL, BOTTOM		6	35'-8	143	6	29'-6	118	6	23'-5	94	6	17'-4	69	6	35'-8	143	6	29'-6	118	6	23'-5	94	6	17'-4	69	4d2
6f1	APRON, LONGITUDINAL, TOP		37	27'-6	1528	37	23'-6	1306	37	19'-6	1084	37	15'-6	861	31	27'-6	1280	31	23'-6	1094	31	19'-6	908	31	15'-6	722	6f1
6f2	APRON, LONGITUDINAL, TOP		16 VAR	2 EACH 5'-10: 24'-10	368	14 VAR	2 EACH 4'-6: 20'-10	266	10 VAR	2 EACH 5'-10: 16'-10	170	8 VAR	2 EACH 4'-6: 12'-10	104	16	2 EACH 5'-10: 24'-10	368	14 VAR	2 EACH 4'-6: 20'-10	266	10 VAR	2 EACH 5'-10: 16'-10	170	8 VAR	2 EACH 4'-6: 12'-10	104	6f2
6f3	APRON, LONGITUDINAL, TOP		2	40'-11	129	2	34'-9	104	2	28'-7	86	2	22'-5	67	2	40'-11	129	2	34'-9	104	2	28'-7	86	2	22'-5	67	6f3
4i1	PARAPET, VERTICAL		79	6'-1	321	77	6'-1	313	77	6'-1	313	77	6'-1	313	67	6'-1	272	65	6'-1	264	65	6'-1	264	65	6'-1	264	4i1
7j1	PARAPET, HORIZONTAL		4	39'-8	324	4	39'-0	319	4	39'-0	319	4	38'-8	316	4	33'-8	275	4	33'-0	270	4	33'-0	270	4	32'-8	267	7j1
6m1	APRON, TRANS., TOP		34 VAR	52'-3: 39'-10	2483	29 VAR	49'-8: 39'-2	2039	23 VAR	47'-5: 39'-2	1576	18 VAR	45'-3: 38'-10	1193	34 VAR	46'-3: 33'-10	2113	29 VAR	44'-0: 33'-2	1725	23 VAR	41'-5: 33'-2	1304	18 VAR	39'-3: 32'-10	974	6m1
6m2	APRON, TRANS., BOTTOM		24 VAR	45'-3: 33'-10	1469	20 VAR	49'-0: 39'-6	1401	16 VAR	41'-0: 33'-6	903	12 VAR	38'-10: 33'-4	650	24 VAR	45'-8: 34'-2	1483	20 VAR	43'-0: 33'-6	1173	16 VAR	35'-0: 27'-6	751	12 VAR	32'-10: 27'-4	542	6m2
6p1	CURTAIN, HORIZONTAL		4	38'-3	230	4	37'-11	228	4	37'-11	228	4	37'-9	227	4	32'-3	194	4	31'-11	192	4	31'-11	192	4	31'-9	191	6p1
6p2	CURTAIN, HORIZONTAL		8	18'-7	223	8	16'-1	193	8	13'-7	163	8	11'-2	134	8	18'-7	223	8	16'-1	193	8	13'-7	163	8	11'-2	134	6p2
6s1	WING SLOPE, BOTH F.		4	7'-8	46	4	7'-8	46	4	7'-8	46	4	7'-8	46	4	7'-8	46	4	7'-8	46	4	7'-8	46	4	7'-8	46	6s1
6s2	WING SLOPE, BOTH F.		4	37'-6	225	4	31'-0	186	4	24'-6	147	4	18'-0	108	4	37'-6	225	4	31'-0	186	4	24'-6	147	4	18'-0	108	6s2
6s3	WING SLOPE, F.F.		2	42'-9	134	2	36'-3	109	2	29'-9	89	2	23'-3	70	2	42'-9	134	2	36'-3	109	2	29'-9	89	2	23'-3	70	6s3
6s4	INTERIOR WALLS, BOTH F.		4	29'-10	179	4	25'-4	152	4	20'-10	125	4	16'-5	98	4	29'-10	179	4	25'-4	152	4	20'-10	125	4	16'-5	98	6s4
5t1	CURTAIN, VERTICAL		51	8'-0	426	47	7'-6	368	43	7'-0	314	39	6'-6	264	47	8'-0	392	43	7'-6	336	39	7'-0	285	35	6'-6	237	5t1

ESTIMATED QUANTITIES ONE HEADWALL			12'-0 x 12'-0	12'-0 x 10'-0	12'-0 x 8'-0	12'-0 x 6'-0	10'-0 x 12'-0	10'-0 x 10'-0	10'-0 x 8'-0	10'-0 x 6'-0
	REINFORCING STEEL		13,014 LBS.	10,710 LBS.	8193 LBS.	6012 LBS.	12,153 LBS.	9714 LBS.	7366 LBS.	5333 LBS.
	CONCRETE	PARAPET Δ	3.7	3.5	3.5	3.4	3.2	3.1	3.1	3.0
		WINGWALLS	34.0	20.4	13.7	7.4	34.0	20.4	13.7	7.4
		FOOTING ΔΔ	74.7	59.7	46.9	34.6	63.7	50.6	39.5	29.0
			112.4 CU. YD.	83.6 CU. YD.	64.1 CU. YD.	45.4 CU. YD.	100.9 CU. YD.	74.1 CU. YD.	56.3 CU. YD.	39.4 CU. YD.

WEIGHT OF BARS OVER 40'-0 LONG INCLUDES AN ALLOWANCE FOR LAP (2'-8 FOR TOP APRON "6m" BARS AND 2'-2 ALL OTHER BARS).
LENGTHS SHOWN FOR BARS OVER 40'-0 LONG DO NOT INCLUDE LAP (2'-8 FOR TOP APRON "m" BARS AND 2'-2 ALL OTHER).

Δ NOTE: INCLUDES TOP OF WINGWALL QUANTITIES.

ΔΔ ASSUMES APRON AND FLOOR ARE EQUAL THICKNESS, ADJUST CONCRETE QUANTITIES FOR TRANSITION WHERE APRON AND FLOOR THICKNESS ARE NOT EQUAL.

BENT BAR DETAILS

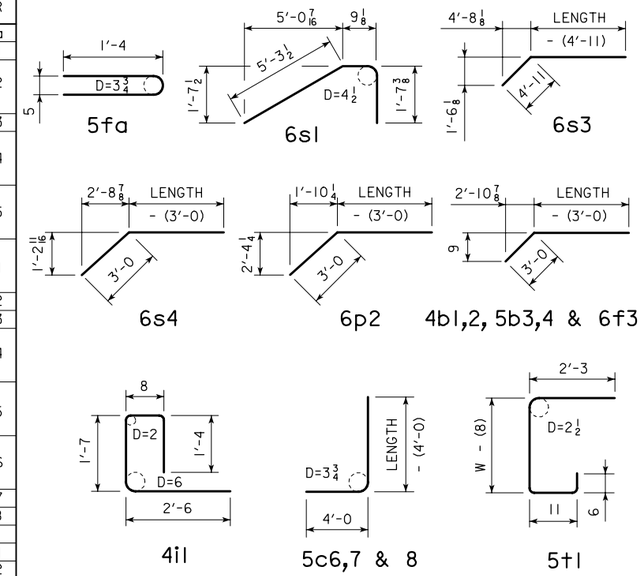

NOTE:
ALL DIMENSIONS ARE OUT TO OUT.
D = PIN DIAMETER.

VARIABLE LENGTH BARS DENOTED BY X:Y

HEADWALL NOTES:

SEE SHEET TRRCB-GI-01 FOR GENERAL INFORMATION, SPECIFICATIONS, AND DESIGN STRESSES.

THIS HEADWALL IS BASED ON A 3:1 SLOPE NORMAL TO CENTERLINE OF ROADWAY.

THE SIDES OF THE FOOTING ARE TO BE FORMED TO INSURE CORRECT LINE AND GRADE.

ALL EXPOSED CORNERS OF 90° OR SHARPER ARE TO BE FILLETED WITH A 3/4" DRESSED AND BEVELED STRIP.

ALL REINFORCING IS TO BE SECURELY WIRED IN PLACE BEFORE THE CONCRETE IS POURED. ALL SLAB AND FLOOR REINFORCING STEEL IS TO BE SUPPORTED BY BAR CHAIRS AT INTERVALS OF NOT MORE THAN 3'-0 IN EITHER DIRECTION AS OUTLINED IN THE STANDARD SPECIFICATIONS.

CLEAR DISTANCE FROM FACE OF CONCRETE TO NEAR REINFORCING BAR IS TO BE 2" UNLESS OTHERWISE NOTED OR SHOWN.

CONCRETE QUANTITIES ARE ESTIMATED FROM BACK OF PARAPET.

HORIZONTAL TAILS OF BARS "b" & "s" ESTIMATED TO EXTEND 2'-0 BEYOND BACK OF PARAPET (INTO END OF BARREL). LONGITUDINAL BARS "d", "6f1", AND "6f3" ESTIMATED TO PROJECT INTO END SECTION OF BARREL A MINIMUM OF 2'-0 BEYOND BACK OF PARAPET.

THE "LENGTH" COLUMN REFLECTS TOTAL NUMBER OF FEET NECESSARY TO MEET THESE REQUIREMENTS.

LATEST REVISION DATE : 06-02

APPROVED BY :

STANDARD DESIGN

FLARED WING HEADWALLS

FOR

TRIPLE REINFORCED CONCRETE BOX CULVERTS

IOWA DEPARTMENT OF TRANSPORTATION - HIGHWAY DIVISION

SEPT., 2001

TRH 0-5-01

REVISED 06-02 - 4i1 BARS NUMBER CHANGED.
TRH 0-5-01 - 09-01 THIS SHEET ISSUED.

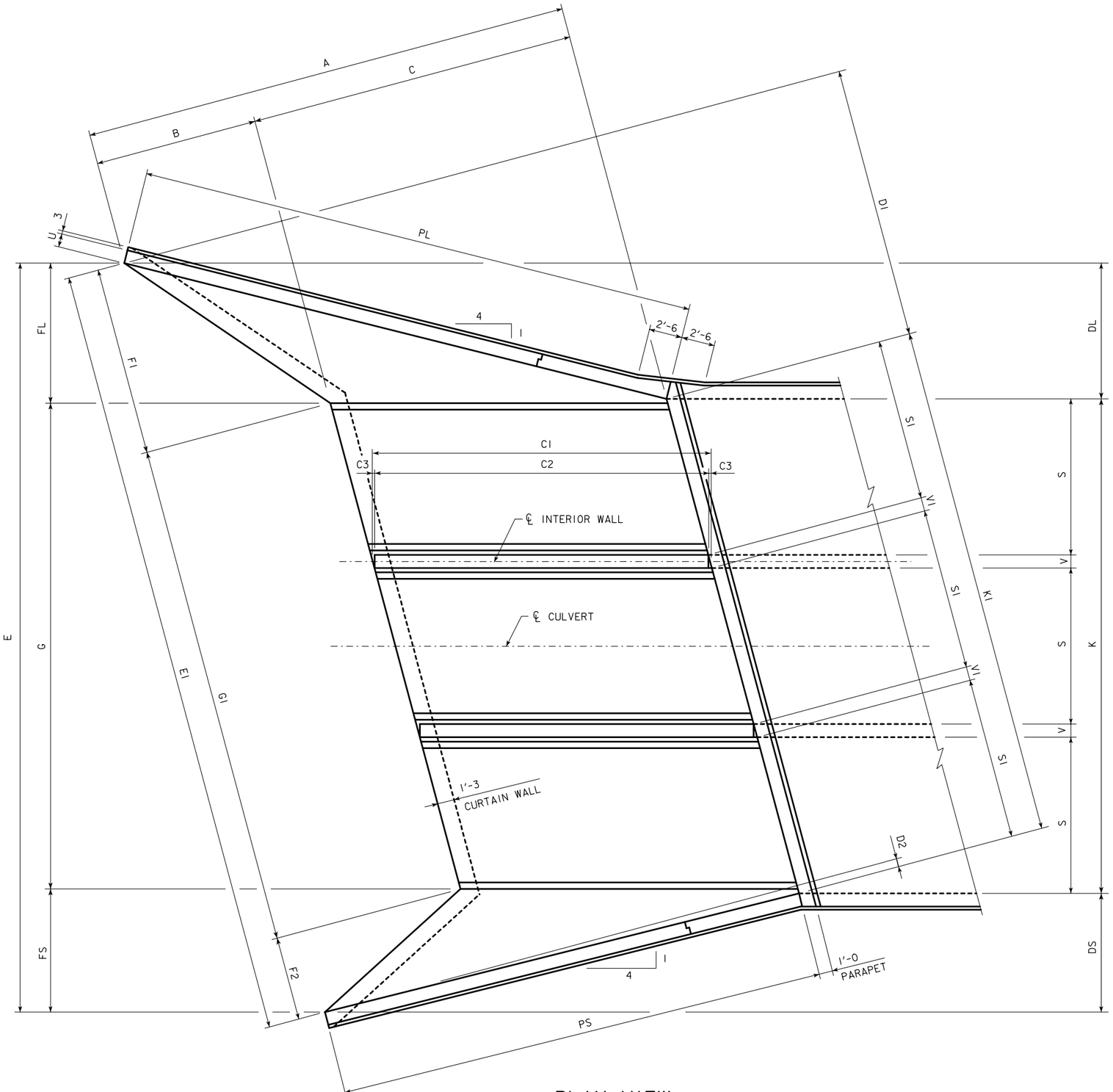

PLAN VIEW

DIMENSIONS TABLE

SxH	12' x 12'	12' x 10'	12' x 8'	12' x 6'	10' x 12'	10' x 10'	10' x 8'	10' x 6'	SxH
A	37'-0	31'-0	25'-0	19'-0	37'-0	31'-0	25'-0	19'-0	A
B	12'-4	10'-4	8'-4	6'-4	12'-4	10'-4	8'-4	6'-4	B
C	24'-8	20'-8	16'-8	12'-8	24'-8	20'-8	16'-8	12'-8	C
C1	25'-6 1/2	21'-4 3/4	17'-3	13'-1 3/8	25'-6 1/2	21'-4 3/4	17'-3	13'-1 3/8	C1
C2	25'-3 1/4	21'-2 1/8	17'-0 3/8	12'-11	25'-3 1/4	21'-2 1/8	17'-0 3/8	12'-11	C2
C3	0'-1 5/8	0'-1 3/8	0'-1 3/8	0'-1 1/4	0'-1 5/8	0'-1 3/8	0'-1 3/8	0'-1 1/4	C3
DL	10'-3 1/8	8'-7 1/4	6'-11 1/4	5'-3 1/4	10'-3 1/8	8'-7 1/4	6'-11 1/4	5'-3 1/4	DL
DS	8'-11 3/4	7'-6 1/4	6'-0 3/4	4'-7 1/4	8'-11 3/4	7'-6 1/4	6'-0 3/4	4'-7 1/4	DS
D1	20'-6 1/2	17'-2 1/2	13'-10 1/2	10'-6 5/8	20'-6 1/2	17'-2 1/2	13'-10 1/2	10'-6 5/8	D1
D2	0'-7 1/2	0'-6 1/4	0'-5	0'-3 7/8	0'-7 1/2	0'-6 1/4	0'-5	0'-3 7/8	D2
E	57'-2 7/8	53'-9 1/2	50'-8	47'-4 1/2	51'-2 7/8	47'-9 1/2	44'-8	41'-4 1/2	E
E1	59'-3 1/8	55'-8 1/4	52'-5 3/8	49'-0 5/8	53'-0 1/2	49'-5 3/4	46'-2 7/8	42'-10	E1
FL	10'-7 1/8	8'-11 1/4	7'-3 1/4	5'-7 1/4	10'-7 1/8	8'-11 1/4	7'-3 1/4	5'-7 1/4	FL
FS	9'-3 3/4	7'-10 1/4	6'-4 3/4	4'-11 1/4	9'-3 3/4	7'-10 1/4	6'-4 3/4	4'-11 1/4	FS
F1	14'-3 3/8	12'-0 1/4	9'-9 1/8	7'-6	14'-3 3/8	12'-0 1/4	9'-9 1/8	7'-6	F1
F2	6'-4	5'-4 3/8	4'-4 5/8	3'-5	6'-4	5'-4 3/8	4'-4 5/8	3'-5	F2
G	37'-4	37'-0	37'-0	36'-10	31'-4	31'-0	31'-0	30'-10	G
G1	38'-7 3/4	38'-3 5/8	38'-3 5/8	38'-1 5/8	32'-5 1/8	32'-1 1/8	32'-1 1/8	31'-11	G1
G2	39'-10 1/2	39'-6 3/8	39'-6 1/4	39'-4	33'-8	33'-3 3/4	33'-3 3/4	33'-1 1/2	G2
G3	18'-10 3/8	15'-10 1/4	12'-10	9'-9 3/4	18'-10 3/8	15'-10 1/4	12'-10	9'-9 3/4	G3
G4	19'-6 5/8	16'-0 5/8	13'-0 1/2	9'-9 5/8	19'-6 5/8	16'-0 5/8	13'-0 1/2	9'-9 5/8	G4
G5	13'-10 3/8	11'-7 3/4	9'-5	7'-2 3/8	13'-10 3/8	11'-7 3/4	9'-5	7'-2 3/8	G5
G6	14'-11 1/4	12'-4 3/8	10'-1 3/4	7'-9 1/8	14'-11 1/4	12'-4 3/8	10'-1 3/4	7'-9 1/8	G6
G7	0'-2 5/8	0'-8 1/8	0'-8 1/8	0'-10 5/8	0'-2 5/8	0'-8 1/8	0'-8 1/8	0'-10 5/8	G7
G8	0'-3 3/4	0'-7 1/2	0'-7 1/2	0'-9 1/4	0'-3 3/4	0'-7 1/2	0'-7 1/2	0'-9 1/4	G8
K	38'-0	37'-8	37'-8	37'-6	32'-0	31'-8	31'-8	31'-6	K
K1	39'-4 1/8	39'-0	39'-0	38'-9 7/8	33'-1 1/2	32'-9 3/8	32'-9 3/8	32'-7 1/4	K1
PL	42'-3 7/8	35'-5 1/2	28'-7 1/8	21'-8 3/4	42'-3 7/8	35'-5 1/2	28'-7 1/8	21'-8 3/4	PL
PS	37'-0 1/8	31'-0	25'-0	19'-0	37'-0 1/8	31'-0	25'-0	19'-0	PS
RL	44'-1	36'-1 1/8	29'-9 3/8	22'-7 5/8	44'-1	36'-1 1/8	29'-9 3/8	22'-7 5/8	RL
RS	39'-0 1/8	32'-8 1/8	26'-4 1/4	20'-0 3/8	39'-0 1/8	32'-8 1/8	26'-4 1/4	20'-0 3/8	RS
R1	27'-6 3/4	23'-0 1/8	18'-5	13'-10 1/8	27'-6 3/4	23'-0 1/8	18'-5	13'-10 1/8	R1
S1	12'-5 1/8	12'-5 1/8	12'-5 1/8	12'-5 1/8	10'-4 1/4	10'-4 1/4	10'-4 1/4	10'-4 1/4	S1
T	1'-2	1'-2	1'-2	1'-2	1'-1	1'-1	1'-1	1'-1	T
U	1'-0	0'-10	0'-10	0'-9	1'-0	0'-10	0'-10	0'-9	U
V	1'-0	0'-10	0'-10	0'-9	1'-0	0'-10	0'-10	0'-9	V
V1	1'-0 3/8	0'-10 3/8	0'-10 3/8	0'-9 3/8	1'-0 3/8	0'-10 3/8	0'-10 3/8	0'-9 3/8	V1
W	5'-0	4'-6	4'-0	3'-6	5'-0	4'-6	4'-0	3'-6	W

HEADWALL NOTES:

1. SEE SHEET TRRCB-G1-01 FOR GENERAL INFORMATION, SPECIFICATIONS AND DESIGN STRESSES.
2. SEE SHEET TRH 15-2-01 THRU 15-4-01 FOR LOCATION OF CERTAIN DIMENSIONS TABULATED.
3. SEE SHEET TRH 15-5-01 FOR HEADWALL NOTES.

LATEST REVISION DATE :

APPROVED BY :

STANDARD DESIGN

FLARED WING HEADWALLS

FOR

TRIPLE REINFORCED CONCRETE BOX CULVERTS

IOWA DEPARTMENT OF TRANSPORTATION - HIGHWAY DIVISION

SEPT., 2001

TRH 15-1-01

TRH 15-1-01 - 09-01 THIS SHEET ISSUED.

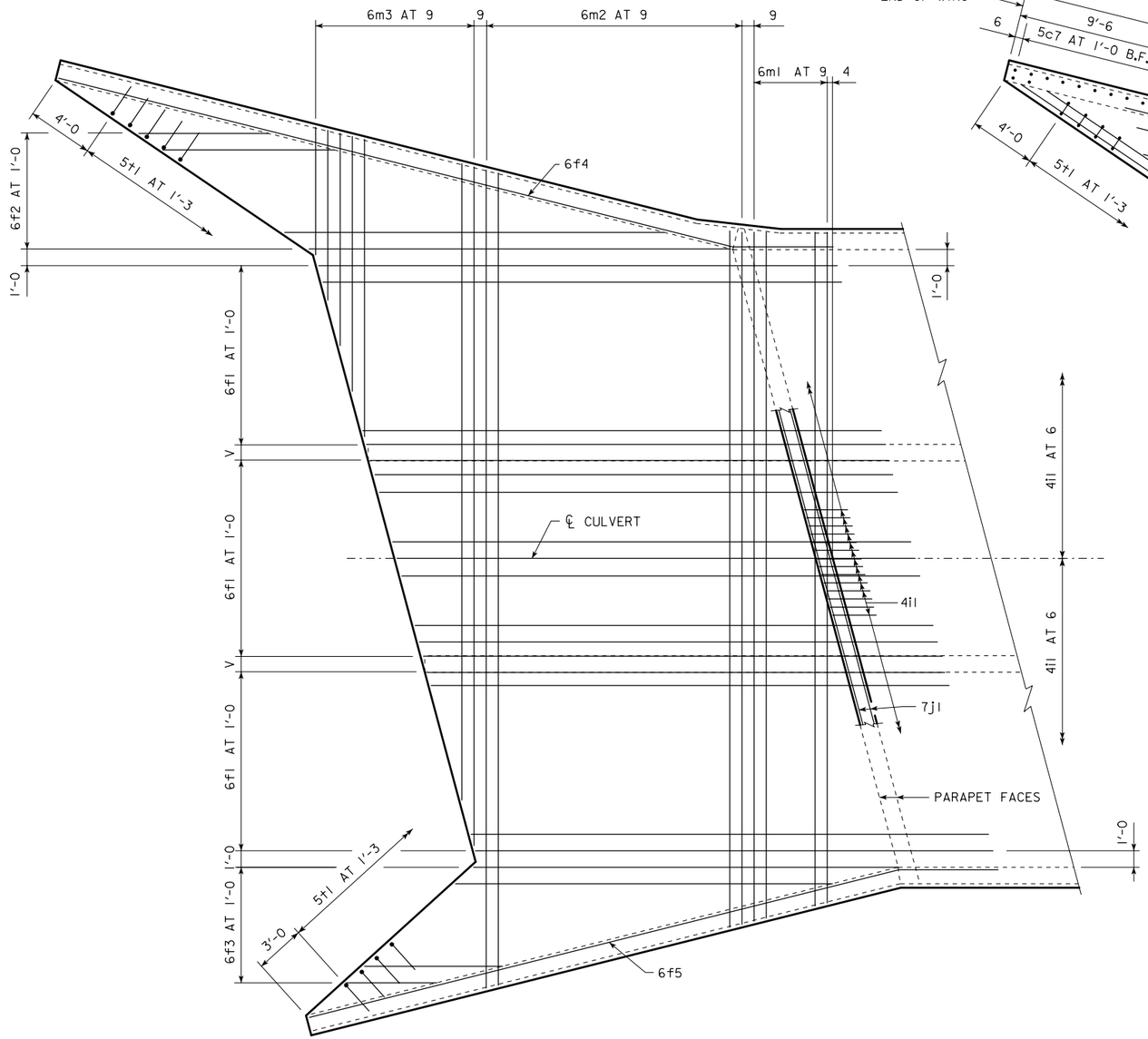

PLAN VIEW - TOP OF APRON REINFORCING BARS

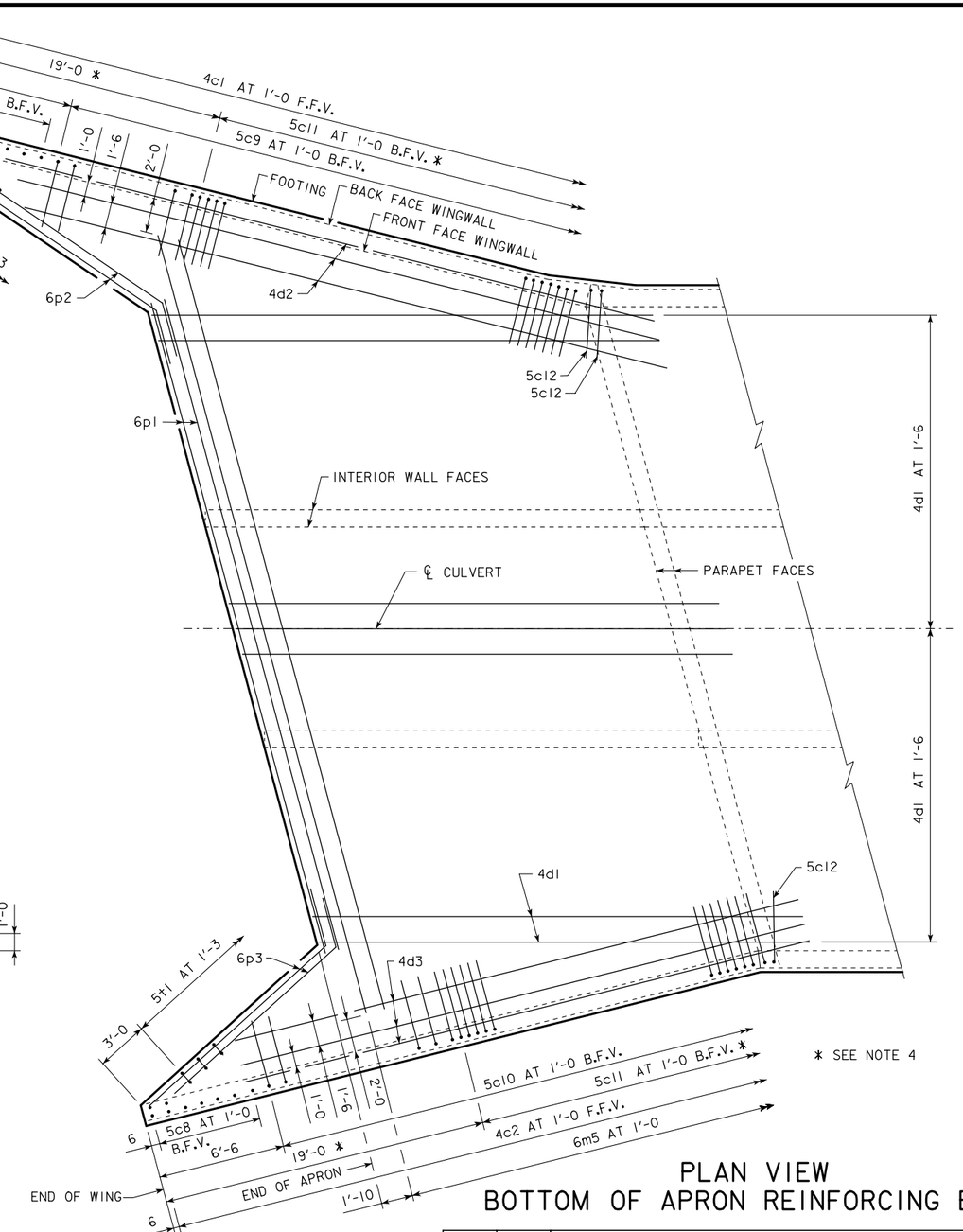

PLAN VIEW
BOTTOM OF APRON REINFORCING BARS

HEADWALL NOTES:

1. BAR SPACINGS AND POSITIONS SHOWN ARE SIMILAR FOR ALL SIZES OF HEADWALLS IN THIS STANDARD.
2. WINGWALL BARS CONSISTENTLY REFERENCED FROM END OF WING FOR ALL HEADWALLS.
3. TOP TRANSVERSE FLOOR BARS ARE REFERENCED APPROXIMATELY 4" FROM THE BACK OF THE PARAPET FOR ALL HEADWALLS.
4. THERE ARE NO 5c11 BARS IN THE 6'-0 HEIGHT HEADWALL.
5. FOR DIMENSION TABLE SEE SHEET TRH 15-1-01.
6. FOR REINFORCING IN CURTAIN WALL SEE CURTAIN WALL DETAILS ON SHEET TRH 15-3-01.

LATEST REVISION DATE :

APPROVED BY :

STANDARD DESIGN

FLARED WING HEADWALLS

FOR

TRIPLE REINFORCED CONCRETE BOX CULVERTS

IOWA DEPARTMENT OF TRANSPORTATION - HIGHWAY DIVISION

SEPT., 2001

TRH 15-2-01

TRH 15-2-01 - 09-01 THIS SHEET ISSUED.

CULVERT HEIGHT (H)	ANGLE	
	ØL	ØS
6'-0	34°49'	43°22'
8'-0	34°30'	42°47'
10'-0	34°18'	42°25'
12'-0	34°11'	42°11'

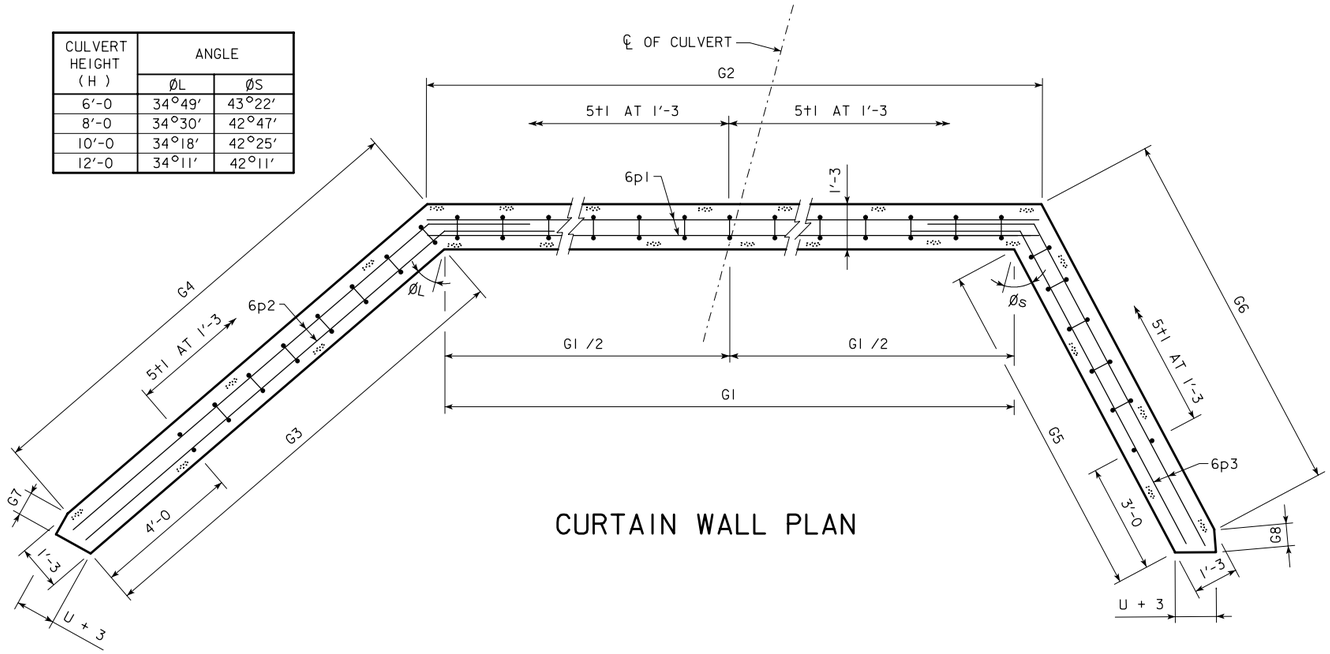

CURTAIN WALL PLAN

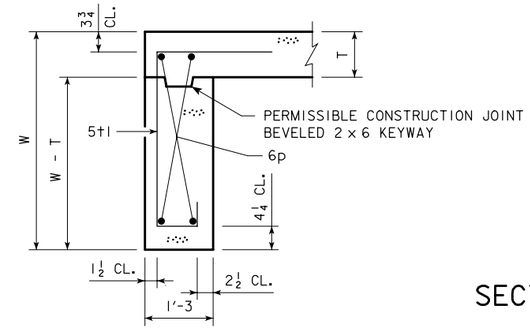

SECTION THRU CURTAIN WALL

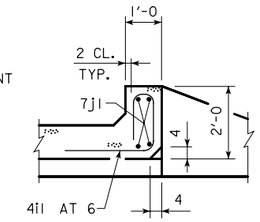

SECTION THRU PARAPET

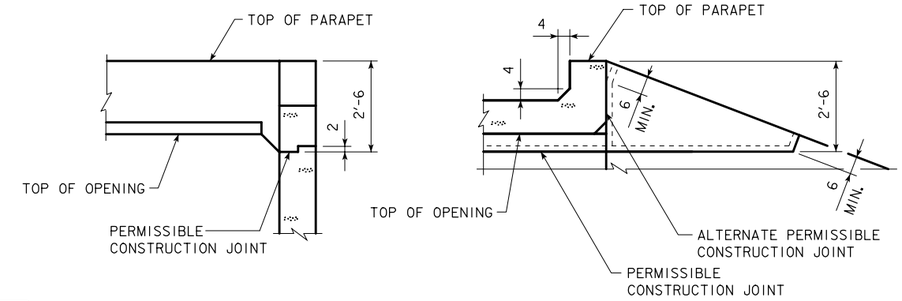

TOP OF WINGWALL DETAILS

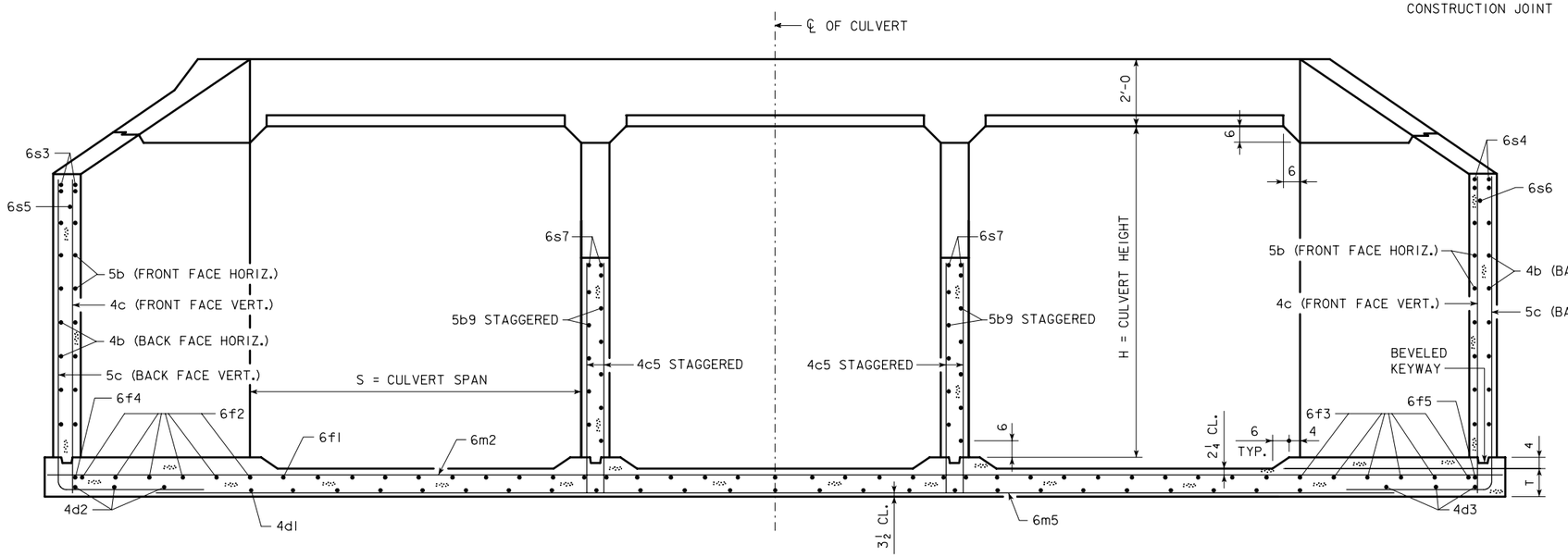

TYPICAL SECTION - NEAR CENTER OF APRON

HEADWALL NOTES:

1. SEE SHEET TRRCB-G1-01 FOR GENERAL INFORMATION, SPECIFICATIONS, AND DESIGN STRESSES.
2. FOR DIMENSION TABLE SEE SHEET TRH 15-1-01.

LATEST REVISION DATE : 04-07

APPROVED BY :

STANDARD DESIGN

FLARED WING HEADWALLS

FOR

TRIPLE REINFORCED CONCRETE BOX CULVERTS

IOWA DEPARTMENT OF TRANSPORTATION - HIGHWAY DIVISION

SEPT., 2001

TRH 15-3-01

REVISION - 04-07 - ADDED PERMISSIBLE CONSTRUCTION JOINT IN CURTAIN WALL.
TRH 15-3-01 - 09-01 THIS SHEET ISSUED.

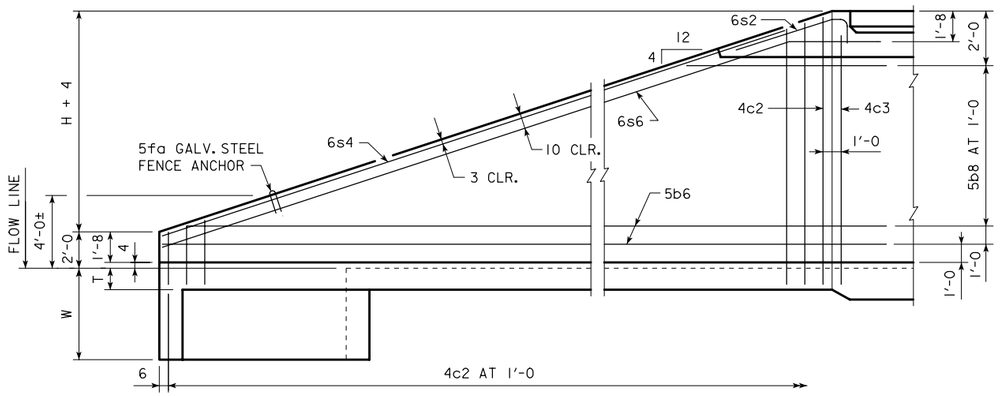

TYPICAL VIEW - FRONT FACE REINFORCING SHORT WINGWALL

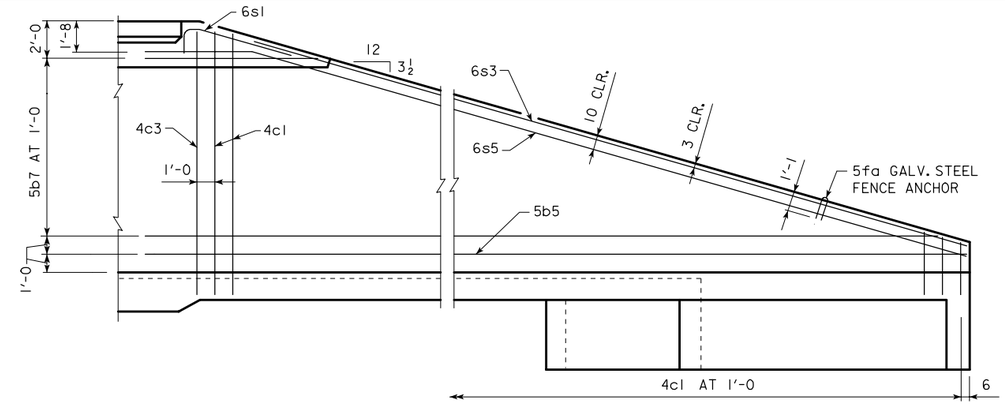

TYPICAL VIEW - FRONT FACE REINFORCING LONG WINGWALL

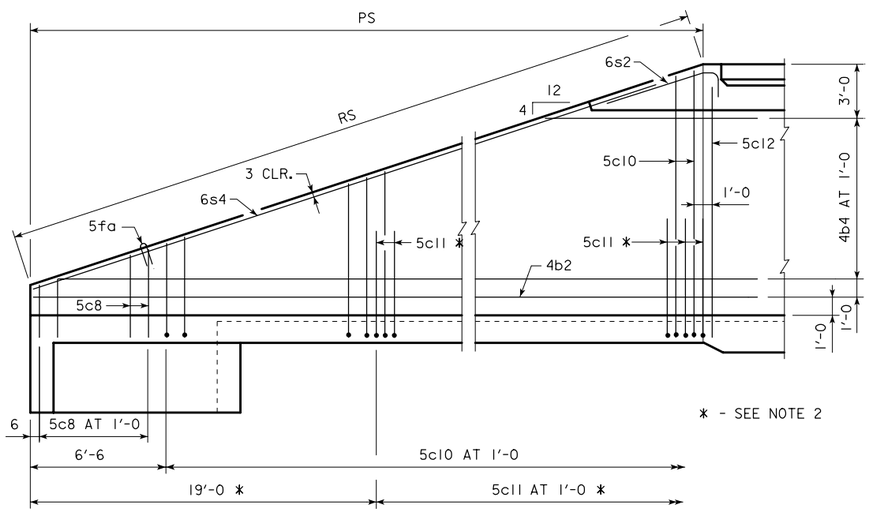

TYPICAL VIEW - BACK FACE REINFORCING SHORT WINGWALL

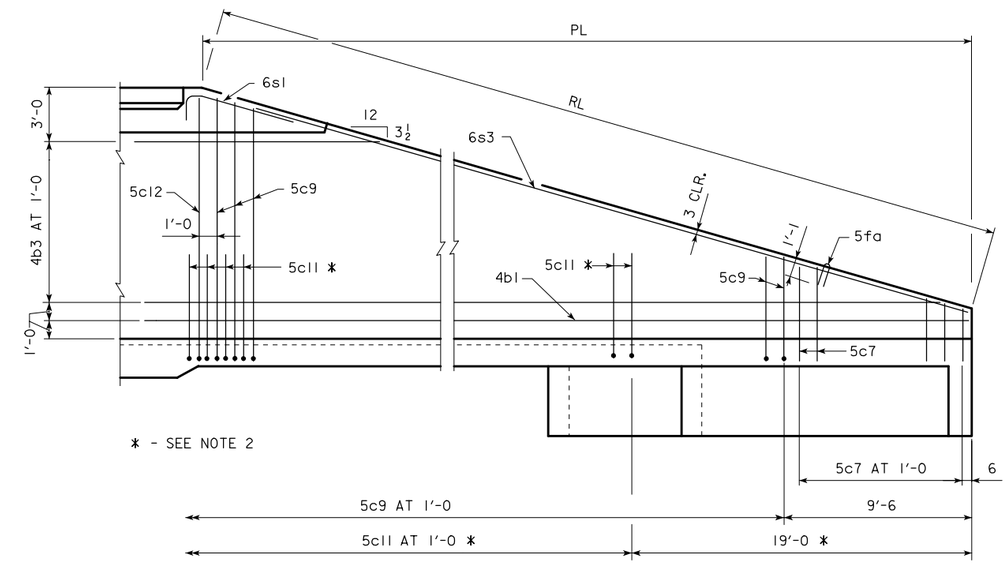

TYPICAL VIEW - BACK FACE REINFORCING LONG WINGWALL

CULVERT HEIGHT (H)	SLOPE y INCHES
6'-0	$4\frac{5}{8}$
8'-0	$4\frac{15}{16}$
10'-0	$5\frac{1}{8}$
12'-0	$5\frac{1}{4}$

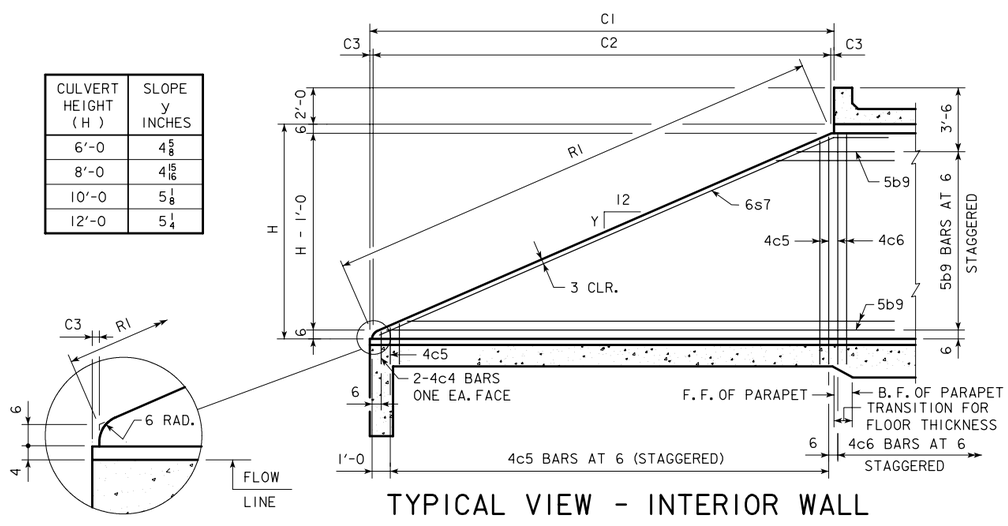

TYPICAL VIEW - INTERIOR WALL

HEADWALL NOTES:

1. BAR SPACINGS AND POSITIONS SHOWN ARE SIMILAR FOR ALL SIZES OF HEADWALLS IN THIS STANDARD.
2. NOT APPLICABLE TO HEADWALL HEIGHT OF H=6'-0.
3. FOR DIMENSION TABLE SEE SHEET TRH 15-1-01.

LATEST REVISION DATE :

APPROVED BY :

STANDARD DESIGN

FLARED WING HEADWALLS

FOR

TRIPLE REINFORCED CONCRETE BOX CULVERTS

IOWA DEPARTMENT OF TRANSPORTATION - HIGHWAY DIVISION

SEPT., 2001

TRH 15-4-01

TRH 15-4-01 - 09-01 THIS SHEET ISSUED.

BILL OF REINFORCING FOR ONE HEADWALL 15° SKEW CULVERT SPAN X CULVERT HEIGHT

BAR	LOCATION	SHAPE	12'-0 x 12'-0 NO.	LENGTH	WEIGHT	12'-0 x 10'-0 NO.	LENGTH	WEIGHT	12'-0 x 8'-0 NO.	LENGTH	WEIGHT	12'-0 x 6'-0 NO.	LENGTH	WEIGHT	10'-0 x 12'-0 NO.	LENGTH	WEIGHT	10'-0 x 10'-0 NO.	LENGTH	WEIGHT	10'-0 x 8'-0 NO.	LENGTH	WEIGHT	10'-0 x 6'-0 NO.	LENGTH	WEIGHT	MARK
5fa	FENCE ANCHOR (GALV.)		2	3'-1	6	2	3'-1	6	2	3'-1	6	2	3'-1	6	2	3'-1	6	2	3'-1	6	2	3'-1	6	2	3'-1	6	5fa
4b1	WINGWALL, B.F.H. LONG		1	45'-1	31	1	38'-3	26	1	31'-5	21	1	24'-6	16	1	45'-1	31	1	38'-3	26	1	31'-5	21	1	24'-6	16	4b1
4b2	WINGWALL, B.F.H. SHORT		1	39'-10	27	1	33'-10	23	1	27'-10	19	1	21'-10	15	1	39'-10	27	1	33'-10	23	1	27'-10	19	1	21'-10	15	4b2
4b3	WINGWALL, B.F.H. LONG		10 VAR	12'-8: 43'-7	191	8 VAR	12'-8: 36'-8	132	6 VAR	12'-8: 29'-10	85	4 VAR	12'-8: 23'-0	48	10 VAR	12'-8: 43'-7	191	8 VAR	12'-8: 36'-8	132	6 VAR	12'-8: 29'-10	85	4 VAR	12'-8: 23'-0	48	4b3
4b4	WINGWALL, B.F.H. SHORT		10 VAR	11'-5: 38'-5	166	8 VAR	11'-5: 32'-5	117	6 VAR	11'-5: 26'-5	76	4 VAR	11'-5: 20'-5	43	10 VAR	11'-5: 38'-5	166	8 VAR	11'-5: 32'-5	117	6 VAR	11'-5: 26'-5	76	4 VAR	11'-5: 20'-5	43	4b4
5b5	WINGWALL, F.F.H. LONG		1	45'-1	49	1	38'-3	40	1	31'-5	33	1	24'-6	26	1	45'-1	49	1	38'-3	40	1	31'-5	33	1	24'-6	26	5b5
5b6	WINGWALL, F.F.H. SHORT		1	39'-10	42	1	33'-10	35	1	27'-10	29	1	21'-10	23	1	39'-10	42	1	33'-10	35	1	27'-10	29	1	21'-10	23	5b6
5b7	WINGWALL, F.F.H. LONG		11 VAR	9'-2: 43'-7	307	9 VAR	9'-2: 36'-8	215	7 VAR	9'-2: 29'-10	142	5 VAR	9'-2: 23'-0	84	11 VAR	9'-2: 43'-7	307	9 VAR	9'-2: 36'-8	215	7 VAR	9'-2: 29'-10	142	5 VAR	9'-2: 23'-0	84	5b7
5b8	WINGWALL, F.F.H. SHORT		11 VAR	8'-5: 38'-5	269	9 VAR	8'-5: 32'-5	192	7 VAR	8'-5: 26'-5	127	5 VAR	8'-5: 20'-5	75	11 VAR	8'-5: 38'-5	269	9 VAR	8'-5: 32'-5	192	7 VAR	8'-5: 26'-5	127	5 VAR	8'-5: 20'-5	75	5b8
5b9	CENTER WALLS, BOTH F.H.		42 VAR	2 EACH 5'-0: 27'-11	721	34 VAR	2 EACH 5'-0: 23'-10	511	26 VAR	2 EACH 5'-1: 19'-8	336	18 VAR	2 EACH 5'-2: 15'-6	194	42 VAR	2 EACH 5'-0: 27'-11	721	34 VAR	2 EACH 5'-0: 23'-10	511	26 VAR	2 EACH 5'-1: 19'-8	336	18 VAR	2 EACH 5'-2: 15'-6	194	5b9
4c1	WINGWALL, F.F.V. LONG		42 VAR	2'-10: 14'-10	248	35 VAR	2'-10: 12'-9	182	29 VAR	2'-10: 10'-9	132	22 VAR	2'-10: 8'-8	85	42 VAR	2'-9: 14'-9	245	35 VAR	2'-9: 12'-8	180	29 VAR	2'-9: 10'-8	130	22 VAR	2'-9: 8'-7	83	4c1
4c2	WINGWALL, F.F.V. SHORT		37 VAR	2'-11: 14'-11	220	31 VAR	2'-11: 12'-11	164	25 VAR	2'-11: 10'-11	116	19 VAR	2'-11: 8'-11	75	37 VAR	2'-10: 14'-10	218	31 VAR	2'-10: 12'-10	162	25 VAR	2'-10: 10'-10	114	19 VAR	2'-10: 8'-10	74	4c2
4c3	WINGWALL, F.F.V. LONG		1	13'-9	9	1	11'-9	8	1	9'-9	7	1	7'-9	5	1	13'-8	9	1	11'-8	8	1	9'-8	6	1	7'-8	5	4c3
4c3	WINGWALL, F.F.V. SHORT		1	13'-9	9	1	11'-9	8	1	9'-9	7	1	7'-9	5	1	13'-8	9	1	11'-8	8	1	9'-8	6	1	7'-8	5	4c3
4c4	CENTER WALLS, BOTH F.V.		4	1'-9	5	4	1'-9	5	4	1'-9	5	4	1'-9	5	4	1'-8	4	4	1'-8	4	4	1'-8	4	4	1'-8	4	4c4
4c5	CENTER WALLS, BOTH F.V.		98 VAR	2 EACH 2'-0: 12'-5	472	82 VAR	2 EACH 2'-0: 10'-6	342	66 VAR	2 EACH 2'-0: 8'-6	231	48 VAR	2 EACH 2'-0: 6'-5	135	98 VAR	2 EACH 1'-11: 12'-4	466	82 VAR	2 EACH 1'-11: 10'-5	338	66 VAR	2 EACH 1'-11: 8'-5	228	48 VAR	2 EACH 1'-11: 6'-4	132	4c5
4c6	CENTER WALLS, BOTH F.V.		4	12'-7	34	4	10'-7	28	4	8'-7	23	4	6'-7	18	4	12'-6	33	4	10'-6	28	4	8'-6	23	4	6'-6	17	4c6
5c7	WINGWALL, B.F.V. LONG		9 VAR	2'-10: 5'-2	38	9 VAR	2'-10: 5'-2	38	9 VAR	2'-10: 5'-2	38	9 VAR	2'-10: 5'-2	38	9 VAR	2'-9: 5'-1	37	9 VAR	2'-9: 5'-1	37	9 VAR	2'-9: 5'-1	37	9 VAR	2'-9: 5'-1	37	5c7
5c8	WINGWALL, B.F.V. SHORT		6 VAR	2'-11: 4'-7	23	6 VAR	2'-11: 4'-7	23	6 VAR	2'-11: 4'-7	23	6 VAR	2'-11: 4'-7	23	6 VAR	2'-10: 4'-6	23	6 VAR	2'-10: 4'-6	23	6 VAR	2'-10: 4'-6	23	6 VAR	2'-10: 4'-6	23	5c8
5c9	WINGWALL, B.F.V. LONG		33 VAR	9'-5: 18'-10	486	26 VAR	9'-5: 16'-9	355	20 VAR	9'-5: 14'-9	252	13 VAR	9'-5: 12'-8	150	33 VAR	9'-4: 18'-9	483	26 VAR	9'-4: 16'-8	353	20 VAR	9'-4: 14'-8	250	13 VAR	9'-4: 12'-7	149	5c9
5c10	WINGWALL, B.F.V. SHORT		31 VAR	8'-11: 18'-11	450	25 VAR	8'-11: 16'-11	337	19 VAR	8'-11: 14'-11	236	13 VAR	8'-11: 12'-11	148	31 VAR	8'-10: 18'-10	447	25 VAR	8'-10: 16'-10	335	19 VAR	8'-10: 14'-10	234	13 VAR	8'-10: 12'-10	147	5c10
5c11	WINGWALL, B.F.V. LONG		25	10'-6	274	18	10'-6	197	11	10'-6	120	—	—	—	25	10'-6	274	18	10'-6	197	11	10'-6	120	—	—	—	5c11
5c11	WINGWALL, B.F.V. SHORT		20	10'-6	219	14	10'-6	153	8	10'-6	88	—	—	—	20	10'-6	219	14	10'-6	153	8	10'-6	88	—	—	—	5c11
5c12	WINGWALL, B.F.V. LONG		1	17'-8	18	1	15'-8	16	1	13'-8	14	1	11'-8	12	1	17'-7	18	1	15'-7	16	1	13'-7	14	1	11'-7	12	5c12
5c12	WINGWALL, B.F.V. SHORT		1	17'-8	18	1	15'-8	16	1	13'-8	14	1	11'-8	12	1	17'-7	18	1	15'-7	16	1	13'-7	14	1	11'-7	12	5c12
4d1	APRON, LONGIT., BOTTOM		25	28'-4	473	25	24'-2	404	25	20'-0	334	25	15'-11	266	21	28'-4	397	21	24'-2	339	21	20'-0	281	21	15'-11	223	4d1
4d2	APRON, LONGIT., BOTT. LONG		3	39'-4	79	3	32'-8	65	3	25'-11	52	3	19'-1	38	3	39'-4	79	3	32'-8	65	3	25'-11	52	3	19'-1	38	4d2
4d3	APRON, LONGIT. BOTT. SHORT		3	34'-11	70	3	29'-0	58	3	23'-1	46	3	17'-2	34	3	34'-11	70	3	29'-0	58	3	23'-1	46	3	17'-2	34	4d3
6f1	APRON, LONGIT., TOP		37	28'-4	1575	37	24'-2	1343	37	20'-0	1111	37	15'-11	885	31	28'-4	1319	31	24'-2	1125	31	20'-0	931	31	15'-11	741	6f1
6f2	APRON, LONGIT., TOP, LONG		9 VAR	5'-5: 25'-8	210	7 VAR	6'-3: 21'-5	145	5 VAR	7'-2: 17'-4	92	4 VAR	5'-6: 13'-2	56	9 VAR	5'-5: 25'-8	210	7 VAR	6'-3: 21'-5	145	5 VAR	7'-2: 17'-4	92	4 VAR	5'-6: 13'-2	56	6f2
6f3	APRON, LONGIT., TOP SHORT		8 VAR	5'-5: 25'-8	187	6 VAR	7'-0: 21'-7	129	5 VAR	5'-9: 17'-5	87	4 VAR	4'-5: 13'-3	53	8 VAR	5'-5: 25'-8	187	6 VAR	7'-0: 21'-7	129	5 VAR	5'-9: 17'-5	87	4 VAR	4'-5: 13'-3	53	6f3
6f4	APRON, LONGIT., TOP, LONG		1	45'-1	71	1	38'-3	57	1	31'-5	47	1	24'-6	37	1	45'-1	71	1	38'-3	57	1	31'-5	47	1	24'-6	37	6f4
6f5	APRON, LONGIT., TOP SHORT		1	39'-10	60	1	33'-10	51	1	27'-10	42	1	21'-10	33	1	39'-10	60	1	33'-10	51	1	27'-10	42	1	21'-10	33	6f5
4i1	PARAPET, VERTICAL		79	6'-2	325	77	6'-2	317	77	6'-2	317	77	6'-2	317	67	6'-2	276	65	6'-2	268	65	6'-2	268	65	6'-2	268	4i1
7j1	PARAPET, HORIZONTAL		4	41'-0	335	4	40'-4	330	4	40'-4	330	4	40'-0	327	4	34'-10	285	4	34'-2	279	4	34'-2	279	4	33'-9	276	7j1
6m1	APRON, TRANS., TOP		8 VAR	42'-7: 41'-3	504	8 VAR	41'-11: 40'-7	496	8 VAR	41'-11: 40'-7	496	8 VAR	41'-7: 40'-3	492	7 VAR	36'-2: 35'-1	375	7 VAR	35'-6: 34'-5	368	7 VAR	35'-6: 34'-5	368	7 VAR	35'-2: 34'-1	364	6m1
6m2	APRON, TRANS., TOP		21 VAR	50'-4: 42'-10	1469	15 VAR	47'-5: 42'-2	1009	10 VAR	45'-7: 42'-2	659	4 VAR	43'-0: 41'-10	255	23 VAR	44'-9: 36'-6	1403	17 VAR	41'-10: 35'-10	992	12 VAR	39'-11: 35'-10	683	6 VAR	37'-4: 35'-6	328	6m2
6m3	APRON, TRANS., TOP		13 VAR	40'-2: 8'-10	478	13 VAR	40'-1: 8'-9	477	13 VAR	37'-8: 6'-4	430	13 VAR	37'-9: 6'-5	431	11 VAR	34'-9: 8'-8	359	11 VAR	34'-8: 8'-7	357	11 VAR	32'-3: 6'-2	317	11 VAR	32'-4: 6'-3	319	6m3
6m5	APRON, TRANS., BOTTOM		24 VAR	47'-5: 35'-0	1485	20 VAR	44'-10: 34'-7	1193	16 VAR	42'-9: 34'-8	930	12 VAR	40'-5: 34'-6	675	24 VAR	41'-2: 28'-9	1260	20 VAR	38'-8: 28'-5	1008	16 VAR	36'-6: 28'-6	781	12 VAR	34'-2: 28'-3	563	6m5
6p1	CURTAIN, HORIZONTAL		4	39'-7	238	4	39'-3	236	4	39'-2	235	4	39'-0	234	4	33'-4	200	4	33'-0	198	4	33'-0	198	4	32'-10	197	6p1
6p2	CURTAIN, HORIZ. LONG		4	21'-10	131	4	18'-9	113	4	15'-9	95	4	12'-9	77	4	21'-10	131	4	18'-9	113	4	15'-9	95	4	12'-9	77	6p2
6p3	CURTAIN, HORIZ. SHORT		4	16'-11	102	4	14'-8	88	4	12'-5	75	4	10'-3	62	4	16'-11	102	4	14'-7	88	4	12'-5	75	4	10'-3	62	6p3
6s1	WING SLOPE, BOTH F. LONG		2	6'-11	21	2	6'-11	21	2	6'-11	21	2	6'-11	21	2	6'-11	21	2	6'-11	21	2	6'-11	21	2	6'-11	21	6s1
6s2	WING SLOPE, BOTH F. SHORT		2	6'-6	20	2	6'-6	20	2	6'-6	20	2	6'-6	20	2	6'-6	20	2	6'-6	20	2	6'-6	20	2	6'-6	20	6s2
6s3	WING SLOPE, BOTH F. LONG		2	41'-9	131	2	34'-7	104	2	27'-6	83	2	20'-4	61	2	41'-9	131	2	34'-7	104	2	27'-6	83	2	20'-4	61	6s3
6s4	WING SLOPE, BOTH F. SHORT		2	37'-4	112	2	31'-0	93	2	24'-8	74	2	18'-4	55	2	37'-4	112	2	31'-0	93	2	24'-8	74	2	18'-4	55	6s4
6s5	WING SLOPE, F.F. LONG		1	46'-1	72	1	38'-11	58	1	31'-9	48	1	24'-7	37	1	46'-1	72	1	38'-11	58	1	31'-9	48	1	24'-7	37	6s5
6s6	WING SLOPE, F.F. SHORT		1	41'-3	65	1	34'-11	52	1	28'-8	43	1	22'-4	34	1	41'-3	65	1	34'-11	52	1	28'-8	43	1	22'-4	34	6s6
6s7	CENTER WALL, BOTH F.HOR.		4	30'-6	183	4	25'-11	156	4	21'-4	128	4	16'-9	101	4	30'-6	183	4	25'-11	156	4	21'-4	128	4	16'-9	101	6s7
5t1	CURTAIN, VERTICAL		52	7'-11	429	48	7'-5	371	45	6'-11	325	40	6'-5	268	46	7'-11	380	42	7'-5	325	39	6'-11	281	34	6'-5	228	5t1
ESTIMATED QUANTITIES ONE HEADWALL	REINFORCING STEEL		13,157 LBS.			10,564 LBS.			8300 LBS.			6110 LBS.			12,080 LBS.			9624 LBS.			7505 LBS.			5456 LBS.		
	CONC. PARAPET △		3.7	116.8 CU. YD.		3.6	86.9 CU. YD.		3.6	66.6 CU. YD.		3.5	47.2 CU. YD.		3.3	105.0 CU. YD.		3.1	76.9 CU. YD.		3.1	58.4 CU. YD.		3.0	40.9 CU. YD.		
	CONC. WINGWALLS		35.2			21.1			14.2			7.7			35.2			21.1			14.2			7.8			
	CONC. FOOTING△△		77.9			62.2			48.8			36.0			66.5			52.7			41.1			30.1			

BENT BAR DETAILS

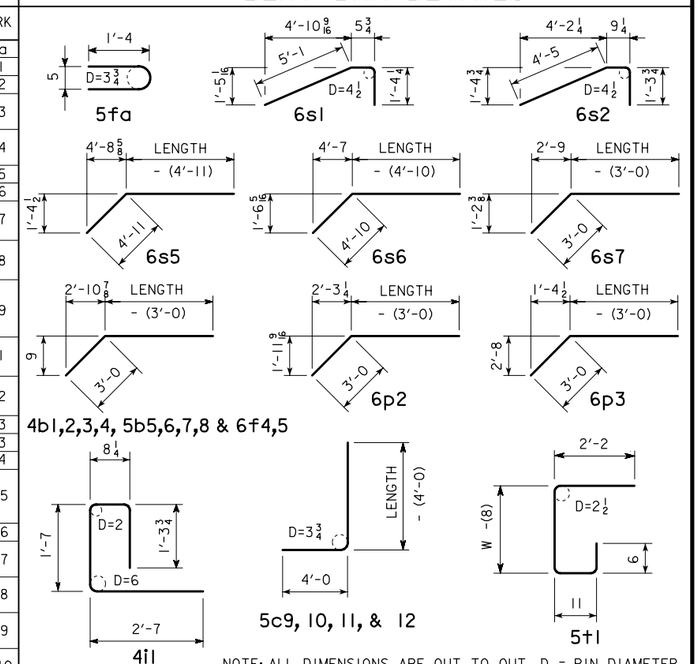

NOTE: ALL DIMENSIONS ARE OUT TO OUT. D = PIN DIAMETER

"SHORT" DENOTES SHORT WINGWALL

"LONG" DENOTES LONG WINGWALL

VARIABLE LENGTH BARS DENOTED BY X:Y

WEIGHT OF BARS OVER 40'-0 LONG INCLUDES AN ALLOWANCE FOR LAP (2'-8 FOR TOP APRON "m" BARS AND 2'-2 ALL OTHER BARS). LENGTHS SHOWN FOR BARS OVER 40'-0 LONG DO NOT INCLUDE LAP (2'-8 FOR TOP APRON "m" BARS AND 2'-2 ALL OTHER).

△ NOTE: INCLUDES TOP OF WINGWALL QUANTITIES.

△△ ASSUMES APRON AND FLOOR ARE EQUAL THICKNESS, ADJUST CONCRETE QUANTITIES FOR TRANSITION WHERE APRON AND FLOOR THICKNESS ARE NOT EQUAL.

HEADWALL NOTES:

SEE SHEET TRRCB-GI-01 FOR GENERAL INFORMATION, SPECIFICATIONS, AND DESIGN STRESSES.

THIS HEADWALL IS BASED ON A 3:1 SLOPE NORMAL TO CENTERLINE OF ROADWAY. THE SIDES OF THE FOOTING ARE TO BE FORMED TO INSURE CORRECT LINE AND GRADE.

ALL EXPOSED CORNERS OF 90° OR SHARPER ARE TO BE FILLETED WITH A $\frac{3}{4}$" DRESSED AND BEVELED STRIP.

ALL REINFORCING IS TO BE SECURELY WIRED IN PLACE BEFORE THE CONCRETE IS POURED. ALL SLAB AND FLOOR REINFORCING STEEL IS TO BE SUPPORTED BY BAR CHAIRS AT INTERVALS OF NOT MORE THAN 3'-0 IN EITHER DIRECTION AS OUTLINED IN THE STANDARD SPECIFICATIONS.

CLEAR DISTANCE FROM FACE OF CONCRETE TO NEAR REINFORCING BAR IS TO BE 2" UNLESS OTHERWISE NOTED OR SHOWN.

CONCRETE QUANTITIES ARE ESTIMATED FROM BACK OF PARAPET.

HORIZONTAL TAILS OF BARS "b" & "s" ESTIMATED TO EXTEND 2'-0 BEYOND BACK OF PARAPET (INTO END OF BARREL). LONGITUDINAL BARS "d", "6f1", "6f4", AND "6f5" ESTIMATED TO PROJECT INTO END SECTION OF BARREL A MINIMUM OF 2'-0 BEYOND BACK OF PARAPET.

THE "LENGTH" COLUMN REFLECTS TOTAL NUMBER OF FEET NECESSARY TO MEET THESE REQUIREMENTS.

LATEST REVISION DATE : 03-06

APPROVED BY :

STANDARD DESIGN

FLARED WING HEADWALLS

FOR

TRIPLE REINFORCED CONCRETE BOX CULVERTS

IOWA DEPARTMENT OF TRANSPORTATION - HIGHWAY DIVISION

SEPT., 2001

TRH 15-5-01

REVISED 03-06 - 7j1, 6m1, 6m2, 6m3 & 6m5 BAR WEIGHTS CHANGED FOR SOME SIZES.
TRH 15-5-01 - 09-01 THIS SHEET ISSUED.

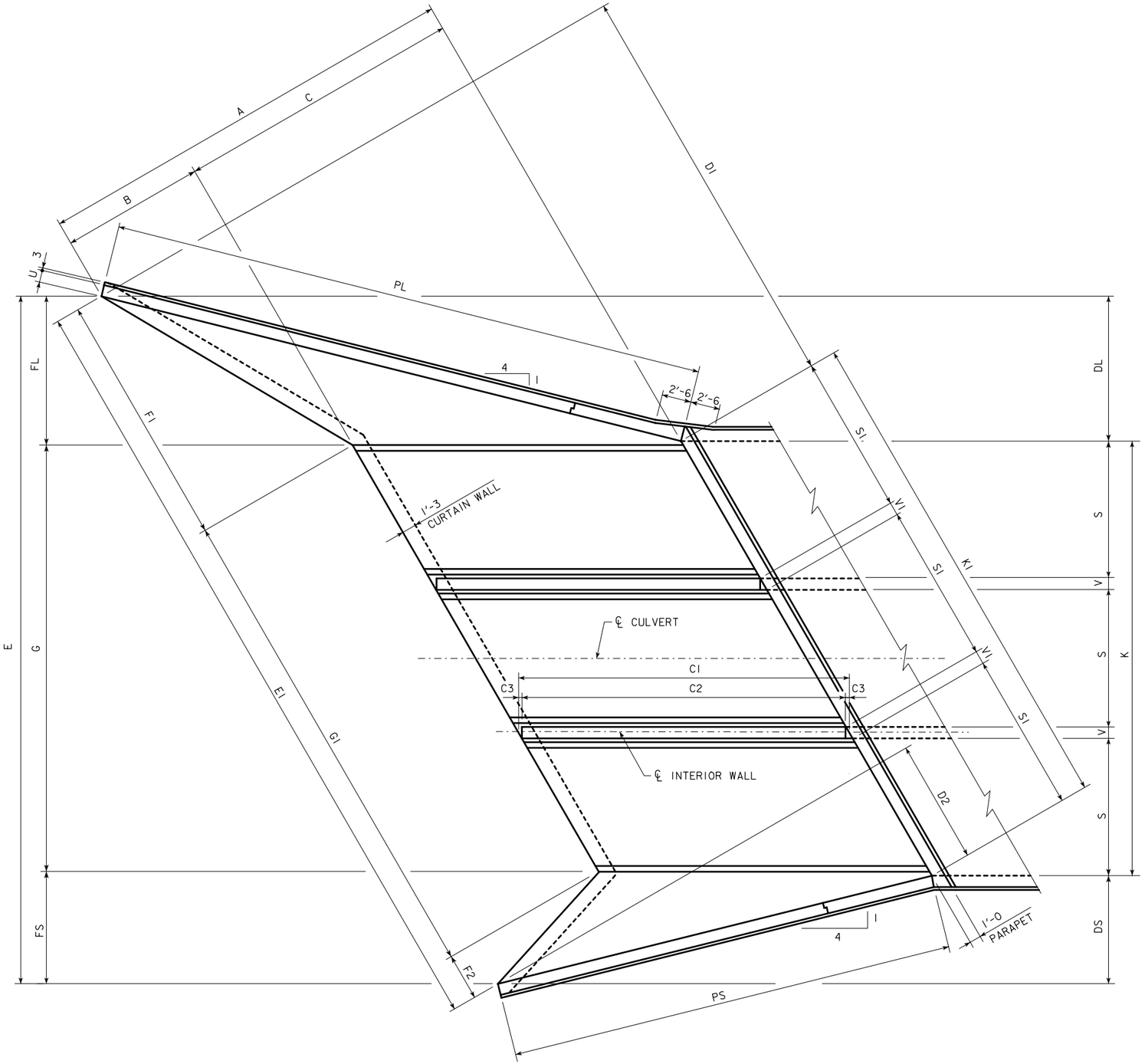

PLAN VIEW

DIMENSIONS TABLE

SxH	12' x 12'	12' x 10'	12' x 8'	12' x 6'	10' x 12'	10' x 10'	10' x 8'	10' x 6'	SxH
A	37'-0	31'-0	25'-0	19'-0	37'-0	31'-0	25'-0	19'-0	A
B	12'-4	10'-4	8'-4	6'-4	12'-4	10'-4	8'-4	6'-4	B
C	24'-8	20'-8	16'-8	12'-8	24'-8	20'-8	16'-8	12'-8	C
C1	28'-5 3/4	23'-10 3/8	19'-3	14'-7 1/2	28'-5 3/4	23'-10 3/8	19'-3	14'-7 1/2	C1
C2	27'-10 7/8	23'-4 5/8	18'-9 1/8	14'-2 3/8	27'-10 7/8	23'-4 5/8	18'-9 1/8	14'-2 3/8	C2
C3	0'-3 1/2	0'-2 7/8	0'-2 7/8	0'-2 5/8	0'-3 1/2	0'-2 7/8	0'-2 7/8	0'-2 5/8	C3
DL	12'-5 3/4	10'-5 1/2	8'-5 1/4	6'-4 7/8	12'-5 3/4	10'-5 1/2	8'-5 1/4	6'-4 7/8	DL
DS	9'-4	7'-9 7/8	6'-3 5/8	4'-9 1/2	9'-4	7'-9 7/8	6'-3 5/8	4'-9 1/2	DS
D1	35'-9 3/8	29'-11 3/4	24'-2 1/8	18'-4 1/2	35'-9 3/8	29'-11 3/4	24'-2 1/8	18'-4 1/2	D1
D2	10'-7	8'-10 3/8	7'-1 7/8	5'-5 1/4	10'-7	8'-10 3/8	7'-1 7/8	5'-5 1/4	D2
E	59'-9 3/4	55'-11 3/8	52'-4 7/8	48'-8 3/8	53'-9 3/4	49'-11 3/8	46'-4 7/8	42'-8 3/8	E
E1	69'-0 3/4	64'-7 1/4	60'-6 1/4	56'-2 7/8	62'-1 5/8	57'-8	53'-7	49'-3 3/4	E1
FL	12'-9 3/4	10'-9 1/2	8'-9 1/4	6'-8 7/8	12'-9 3/4	10'-9 1/2	8'-9 1/4	6'-8 7/8	FL
FS	9'-8	8'-1 7/8	6'-7 5/8	5'-1 1/2	9'-8	8'-1 7/8	6'-7 5/8	5'-1 1/2	FS
F1	21'-11	18'-5 1/8	14'-11 1/4	11'-5 3/8	21'-11	18'-5 1/8	14'-11 1/4	11'-5 3/8	F1
F2	4'-0 1/2	3'-5 3/8	2'-10 1/4	2'-3 1/8	4'-0 1/2	3'-5 3/8	2'-10 1/4	2'-3 1/8	F2
G	37'-4	37'-0	37'-0	36'-10	31'-4	31'-0	31'-0	30'-10	G
G1	43'-1 1/4	42'-8 3/4	42'-8 3/4	42'-6 3/8	36'-2 1/8	35'-9 1/2	35'-9 1/2	35'-7 1/4	G1
G2	44'-4 1/8	43'-11 3/8	43'-11 1/4	43'-8 7/8	37'-5	37'-0 1/4	37'-0 1/8	36'-9 5/8	G2
G3	25'-1 7/8	21'-1 1/2	17'-1 1/4	13'-1	25'-1 7/8	21'-1 1/2	17'-1 1/4	13'-1	G3
G4	25'-7 7/8	21'-0 5/8	17'-0 3/8	12'-8 3/4	25'-7 7/8	21'-0 5/8	17'-0 3/8	12'-8 3/4	G4
G5	12'-11 3/4	10'-10 3/4	8'-9 3/4	6'-8 3/4	12'-11 3/4	10'-10 3/4	8'-9 3/4	6'-8 3/4	G5
G6	14'-3 1/4	11'-10 5/8	9'-9 5/8	7'-7	14'-3 1/4	11'-10 5/8	9'-9 5/8	7'-7	G6
G7	0'-2 1/4	0'-8 7/8	0'-8 7/8	1'-0	0'-2 1/4	0'-8 7/8	0'-8 7/8	1'-0	G7
G8	0'-4 5/8	0'-7 5/8	0'-7 5/8	0'-9	0'-4 5/8	0'-7 5/8	0'-7 5/8	0'-9	G8
K	38'-0	37'-8	37'-8	37'-6	32'-0	31'-8	31'-8	31'-6	K
K1	43'-10 1/2	43'-5 7/8	43'-5 7/8	43'-3 5/8	36'-11 3/8	36'-6 3/4	36'-6 3/4	36'-4 1/2	K1
PL	51'-5 5/8	43'-1 1/2	34'-9 1/4	26'-5 1/8	51'-5 5/8	43'-1 1/2	34'-9 1/4	26'-5 1/8	PL
PS	38'-5 3/4	32'-2 7/8	26'-0	19'-9 1/8	38'-5 3/4	32'-2 7/8	26'-0	19'-9 1/8	PS
RL	52'-11 1/8	44'-4 1/8	35'-9 1/8	27'-2 1/8	52'-11 1/8	44'-4 1/8	35'-9 1/8	27'-2 1/8	RL
RS	40'-5	33'-10 1/4	27'-3 5/8	20'-9	40'-5	33'-10 1/4	27'-3 5/8	20'-9	RS
R1	30'-0	25'-0 5/8	20'-0 3/8	15'-0 5/8	30'-0	25'-0 5/8	20'-0 3/8	15'-0 5/8	R1
S1	13'-10 1/4	13'-10 1/4	13'-10 1/4	13'-10 1/4	11'-6 5/8	11'-6 5/8	11'-6 5/8	11'-6 5/8	S1
T	1'-2	1'-2	1'-2	1'-2	1'-1	1'-1	1'-1	1'-1	T
U	1'-0	0'-10	0'-10	0'-9	1'-0	0'-10	0'-10	0'-9	U
V	1'-0	0'-10	0'-10	0'-9	1'-0	0'-10	0'-10	0'-9	V
V1	1'-1 7/8	0'-11 1/2	0'-11 1/2	0'-10 3/8	1'-1 7/8	0'-11 1/2	0'-11 1/2	0'-10 3/8	V1
W	5'-0	4'-6	4'-0	3'-6	5'-0	4'-6	4'-0	3'-6	W

HEADWALL NOTES:

1. SEE SHEET TRRCB-G1-01 FOR GENERAL INFORMATION, SPECIFICATIONS AND DESIGN STRESSES.
2. SEE SHEETS TRH 30-2-01 THRU TRH 30-4-01 FOR LOCATION OF CERTAIN DIMENSIONS TABULATED.
3. SEE SHEET TRH 30-5-01 FOR HEADWALL NOTES.

LATEST REVISION DATE :

APPROVED BY :

STANDARD DESIGN

FLARED WING HEADWALLS

FOR

TRIPLE REINFORCED CONCRETE BOX CULVERTS

IOWA DEPARTMENT OF TRANSPORTATION - HIGHWAY DIVISION

SEPT., 2001

TRH 30-1-01

TRH 30-1-01 - 09-01 THIS SHEET ISSUED.

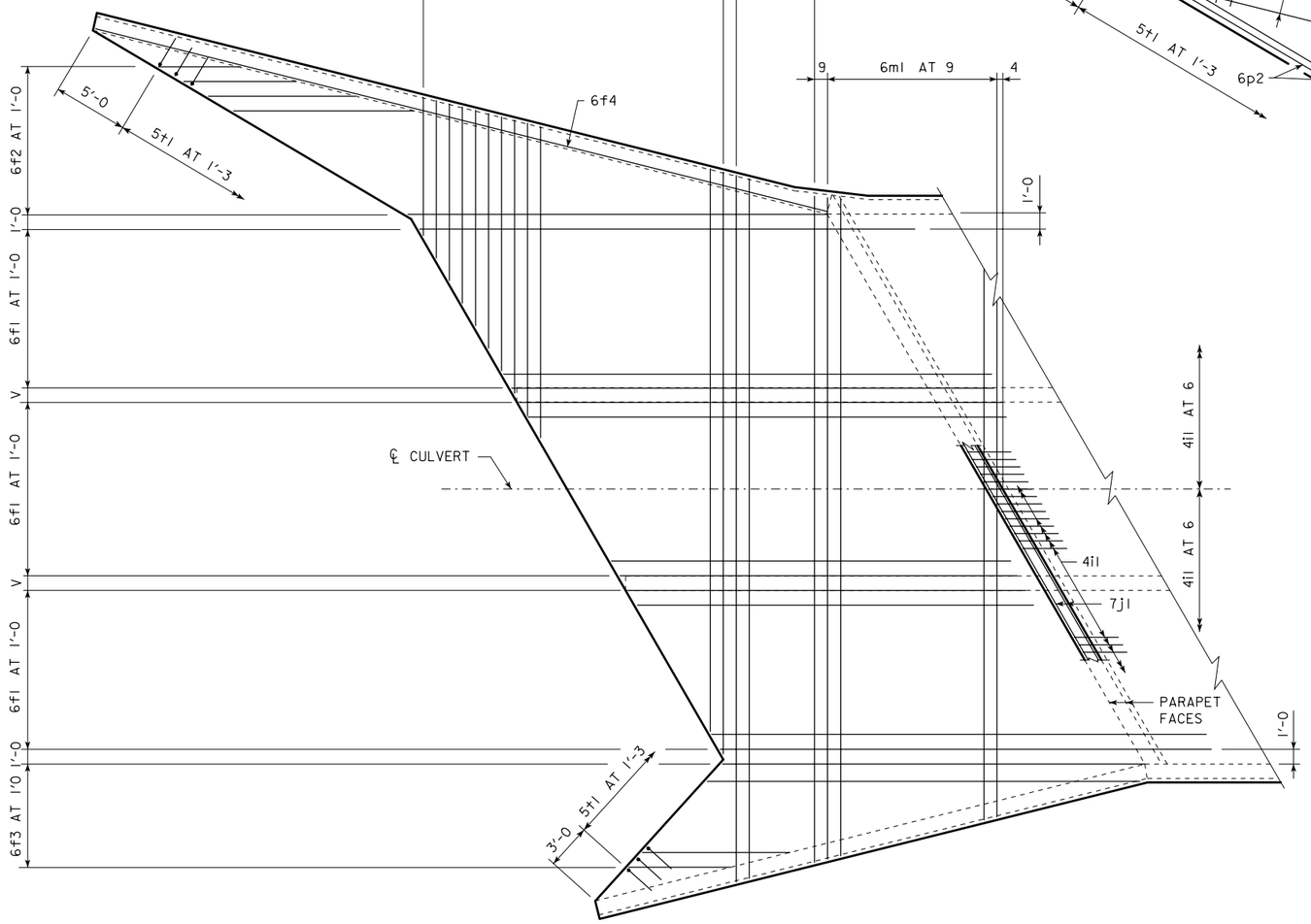

PLAN VIEW - TOP OF APRON REINFORCING BARS

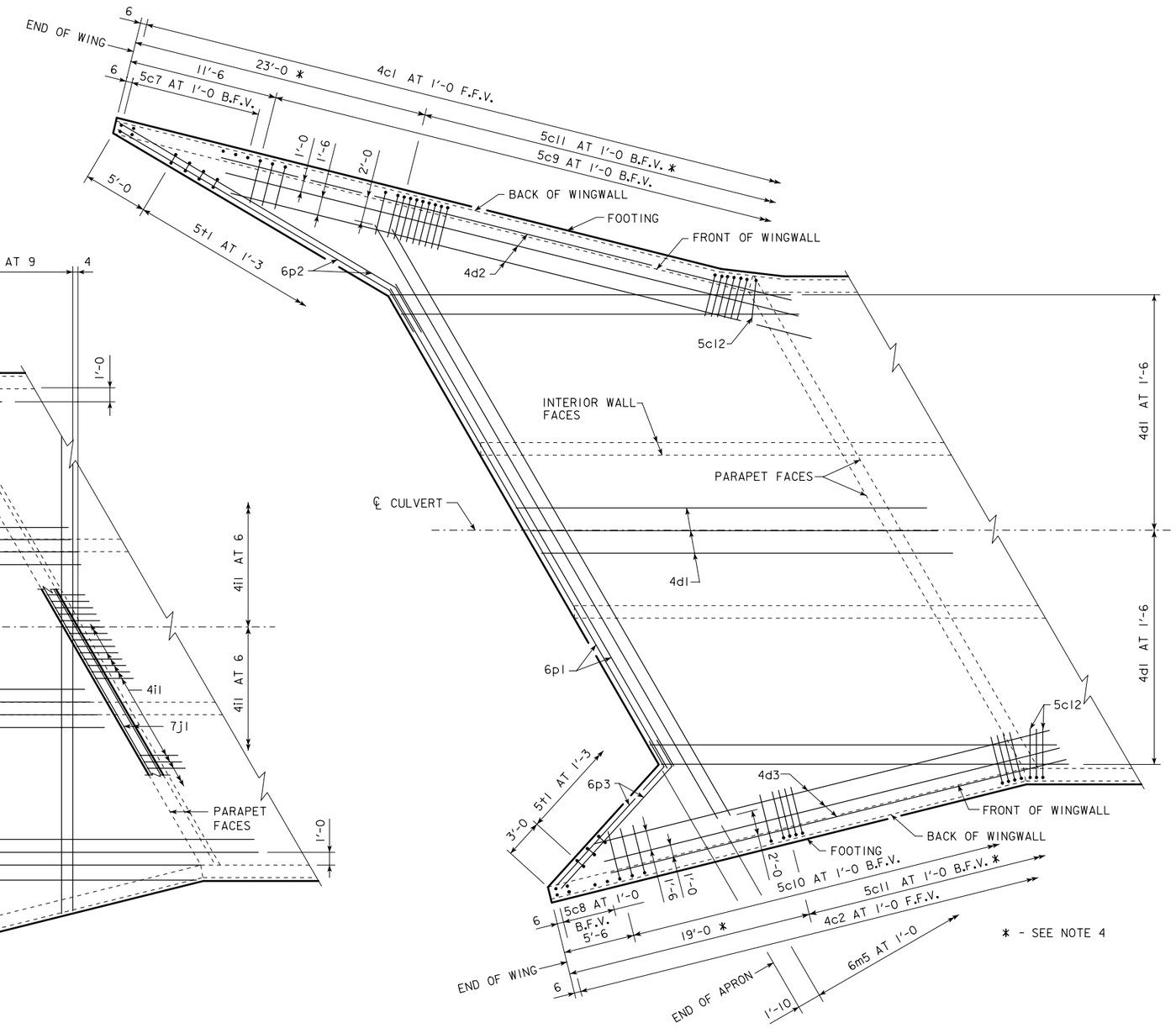

PLAN VIEW - BOTTOM OF APRON REINFORCING BARS

HEADWALL NOTES:

1. BAR SPACINGS AND POSITIONS SHOWN ARE SIMILAR FOR ALL SIZES OF HEADWALLS IN THIS STANDARD.
2. WINGWALL BARS CONSISTENTLY REFERENCE FROM END OF WING FOR ALL HEADWALLS.
3. TOP TRANSVERSE FLOOR BARS ARE REFERENCED APPROXIMATELY 4" FROM THE BACK OF THE PARAPET FOR ALL HEADWALLS.
4. THERE ARE NO 5c11 BARS IN THE 6'-0 HEIGHT HEADWALL.
5. FOR DIMENSION TABLE SEE SHEET TRH 30-1-01.
6. FOR REINFORCING IN CURTAIN WALL SEE CURTAIN WALL DETAILS ON SHEET TRH 30-3-01.

LATEST REVISION DATE :

APPROVED BY :

STANDARD DESIGN

FLARED WING HEADWALLS

FOR

TRIPLE REINFORCED CONCRETE BOX CULVERTS

IOWA DEPARTMENT OF TRANSPORTATION - HIGHWAY DIVISION

SEPT., 2001

TRH 30-2-01

TRH 30-2-01 - 09-01 THIS SHEET ISSUED.

CULVERT HEIGHT (H)	ANGLE	
	ØL	ØS
6'-0	31°02'	49°40'
8'-0	30°50'	48°55'
10'-0	30°43'	48°27'
12'-0	30°38'	48°09'

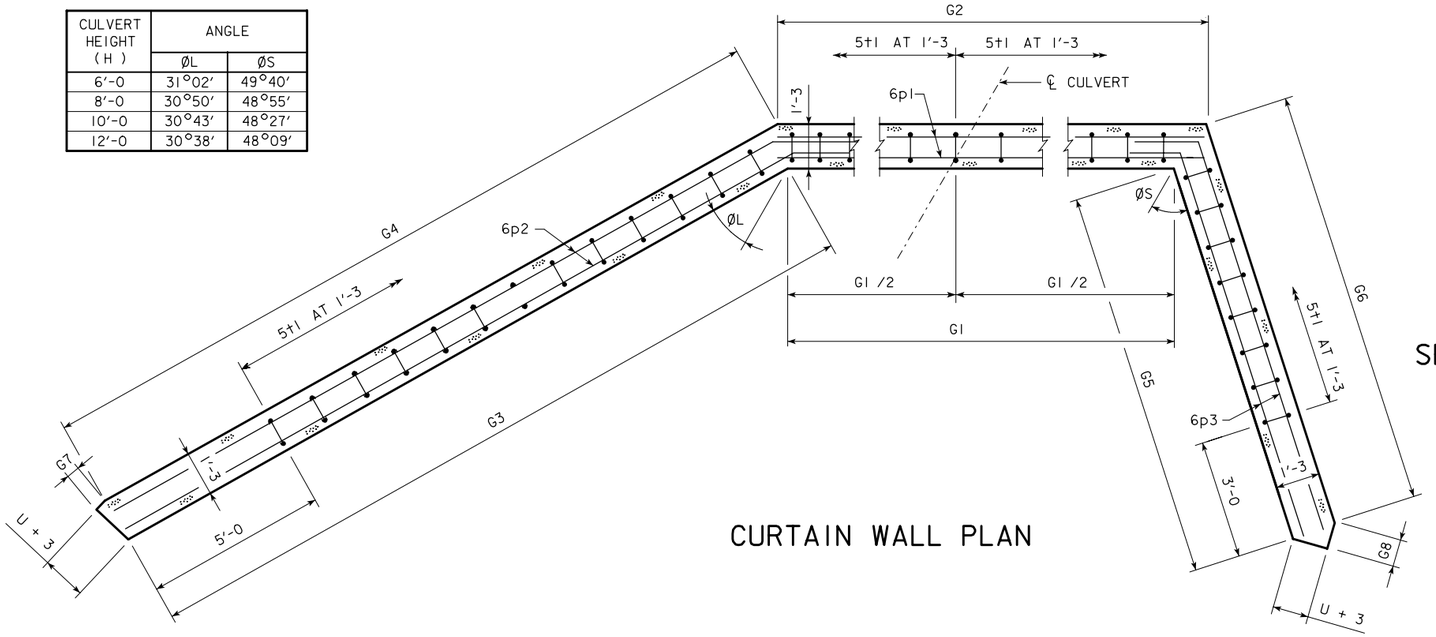

CURTAIN WALL PLAN

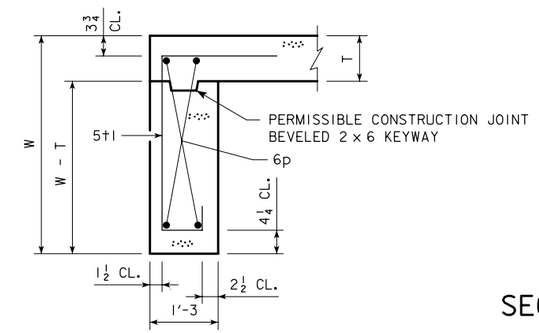

SECTION THRU CURTAIN WALL

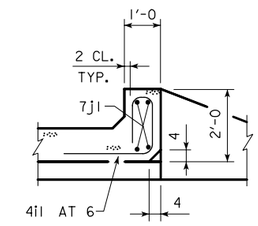

SECTION THRU PARAPET

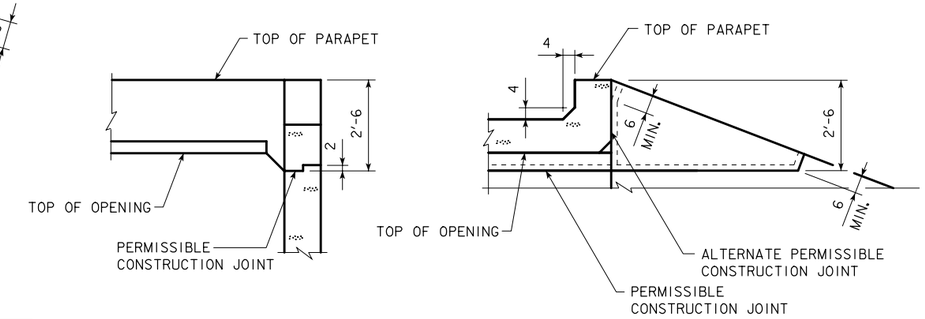

TOP OF WINGWALL DETAILS

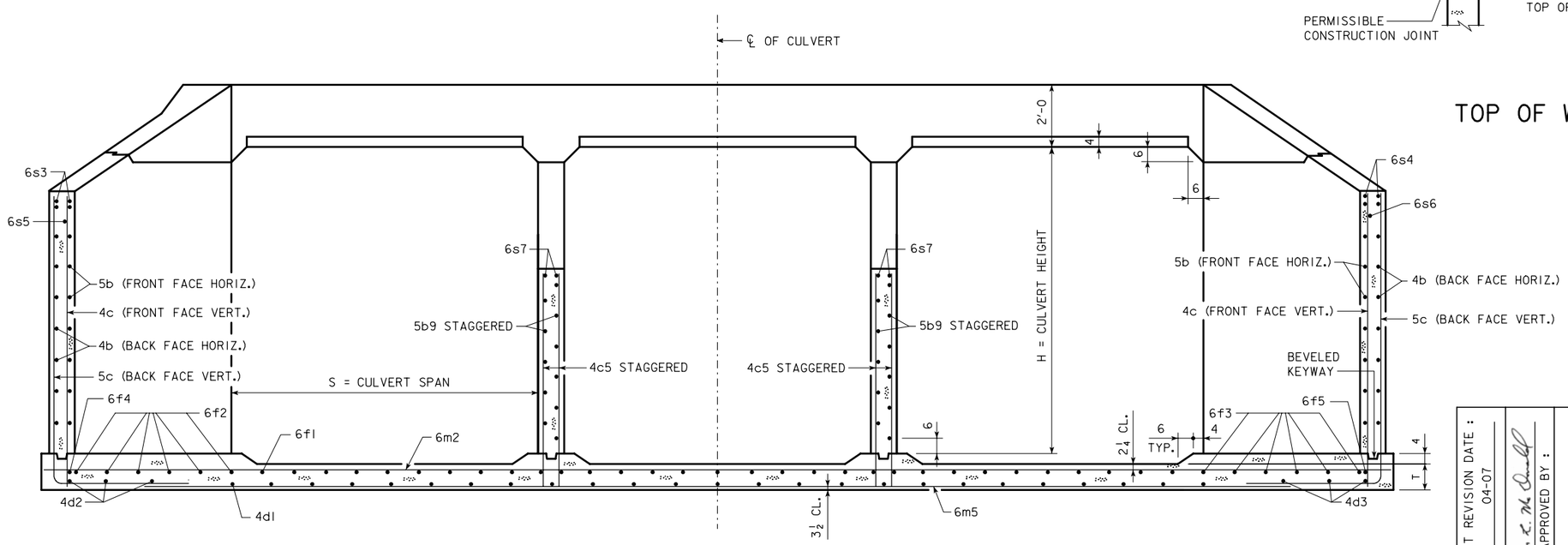

TYPICAL SECTION - NEAR CENTER OF APRON

HEADWALL NOTES:

1. SEE SHEET TRRCB-G1-01 FOR GENERAL INFORMATION, SPECIFICATIONS, AND DESIGN STRESSES.
2. FOR DIMENSION TABLE SEE SHEET TRH 30-1-01.

LATEST REVISION DATE : 04-07

APPROVED BY :

STANDARD DESIGN

FLARED WING HEADWALLS

FOR

TRIPLE REINFORCED CONCRETE BOX CULVERTS

IOWA DEPARTMENT OF TRANSPORTATION - HIGHWAY DIVISION

SEPT., 2001

TRH 30-3-01

REVISION - 04-07 - ADDED PERMISSIBLE CONSTRUCTION JOINT IN CURTAIN WALL.
TRH 30-3-01 - 09-01 THIS SHEET ISSUED.

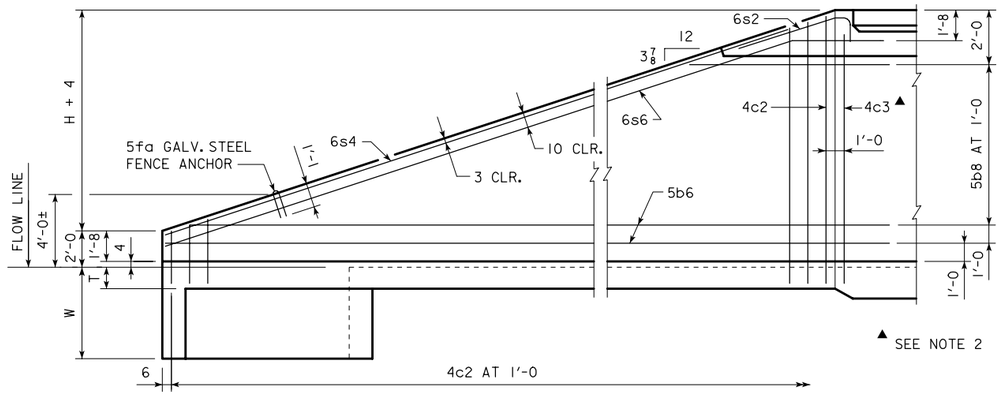

TYPICAL VIEW - FRONT FACE REINFORCING SHORT WINGWALL

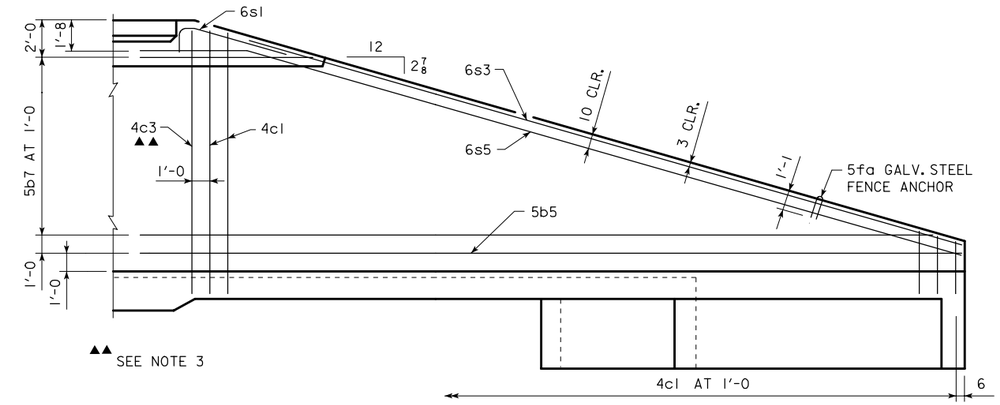

TYPICAL VIEW - FRONT FACE REINFORCING LONG WINGWALL

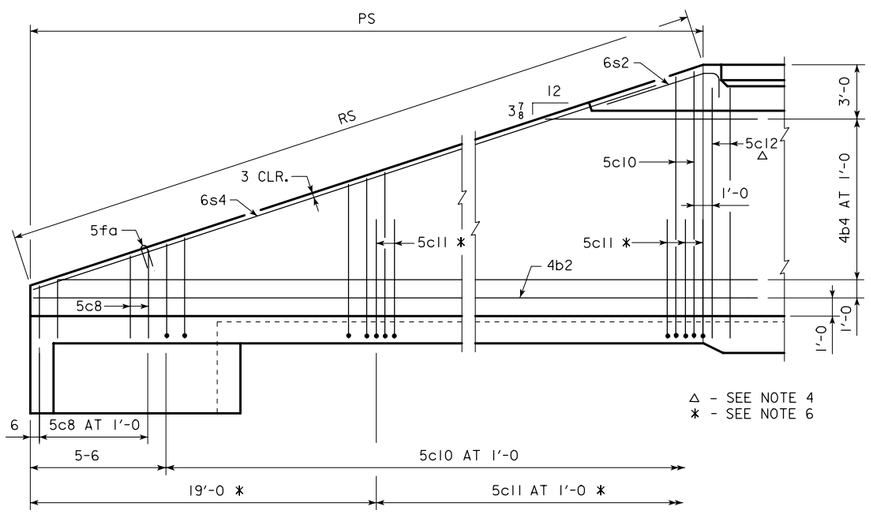

TYPICAL VIEW - BACK FACE REINFORCING SHORT WINGWALL

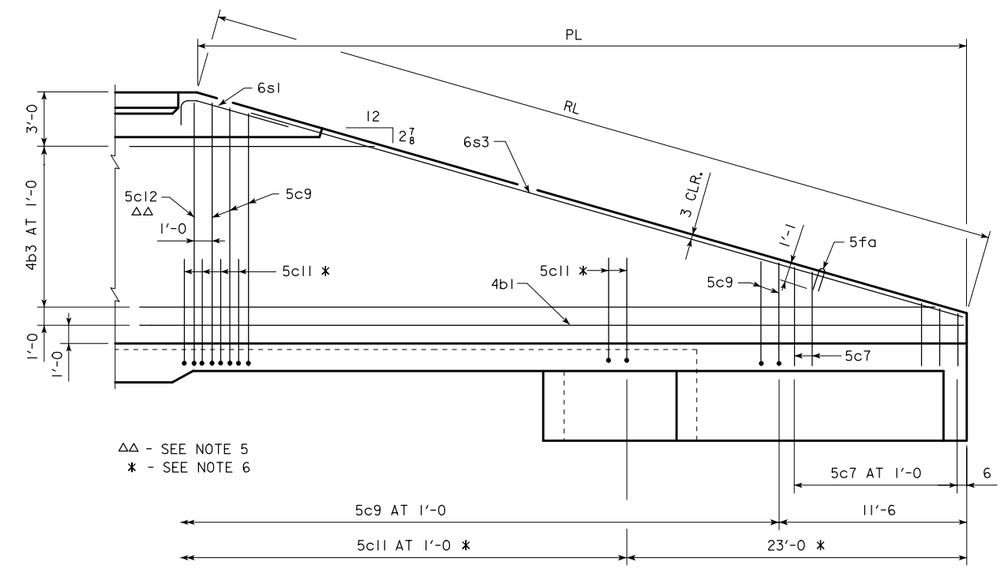

TYPICAL VIEW - BACK FACE REINFORCING LONG WINGWALL

CULVERT HEIGHT (H)	SLOPE y INCHES
6'-0	$4\frac{1}{4}$
8'-0	$4\frac{1}{2}$
10'-0	$4\frac{5}{8}$
12'-0	$4\frac{3}{4}$

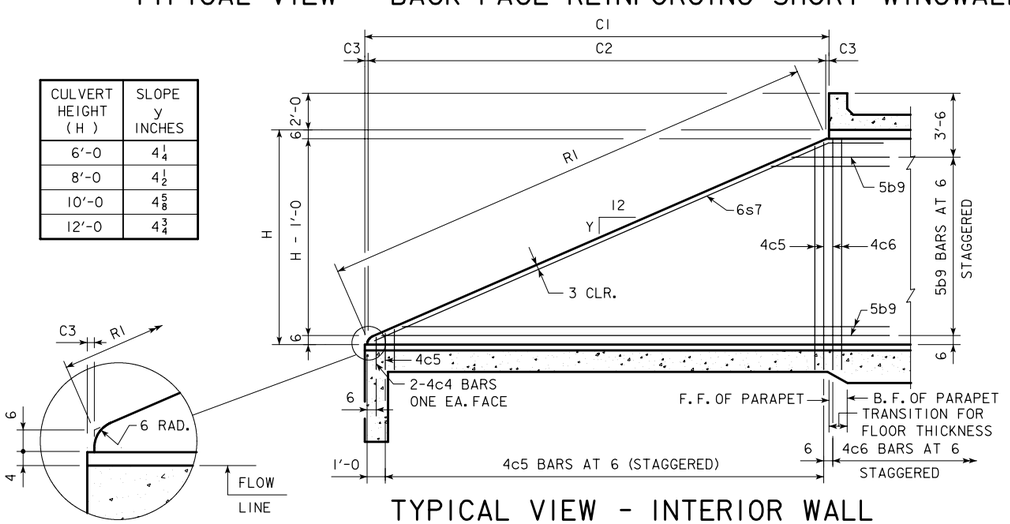

TYPICAL VIEW - INTERIOR WALL

HEADWALL NOTES:

1. BAR SPACINGS AND POSITIONS SHOWN ARE SIMILAR FOR ALL SIZES OF HEADWALLS IN THIS STANDARD.
2. ONE c3 BAR, HEADWALL HEIGHTS OF 6'-0, 8'-0 AND TWO c3 BARS, HEADWALL HEIGHTS OF 10'-0 AND 12'-0.
3. ONE c3 BAR, HEADWALL HEIGHT OF 8'-0 AND TWO c3 BARS, HEADWALL HEIGHTS OF 6'-0, 10'-0 AND 12'-0.
4. ONE c12 BAR, HEADWALL HEIGHTS OF 6'-0, 8'-0 AND TWO c12 BARS, HEADWALL HEIGHTS OF 10'-0 AND 12'-0.
5. ONE c12 BAR, HEADWALL HEIGHT OF 6'-0 AND TWO c12 BARS, HEADWALL HEIGHTS OF 6'-0, 10'-0 AND 12'-0.
6. NOT APPLICABLE TO HEADWALL HEIGHT OF 6'-0.
7. FOR DIMENSION TABLE SEE SHEET TRH 30-1-01

LATEST REVISION DATE :

APPROVED BY :

STANDARD DESIGN

FLARED WING HEADWALLS

FOR

TRIPLE REINFORCED CONCRETE BOX CULVERTS

IOWA DEPARTMENT OF TRANSPORTATION - HIGHWAY DIVISION

SEPT., 2001

TRH 30-4-01

TRH 30-4-01 - 09-01 THIS SHEET ISSUED.

BILL OF REINFORCING FOR ONE TRIPLE HEADWALL 30° SKEW CULVERT SPAN x CULVERT HEIGHT

BAR	LOCATION	SHAPE	12'-0 x 12'-0 NO.	LENGTH	WEIGHT	12'-0 x 10'-0 NO.	LENGTH	WEIGHT	12'-0 x 8'-0 NO.	LENGTH	WEIGHT	12'-0 x 6'-0 NO.	LENGTH	WEIGHT	10'-0 x 12'-0 NO.	LENGTH	WEIGHT	10'-0 x 10'-0 NO.	LENGTH	WEIGHT	10'-0 x 8'-0 NO.	LENGTH	WEIGHT	10'-0 x 6'-0 NO.	LENGTH	WEIGHT	BAR
5fa	FENCE ANCHOR (GALV.)		2	3'-1	6	2	3'-1	6	2	3'-1	6	2	3'-1	6	2	3'-1	6	2	3'-1	6	2	3'-1	6	2	3'-1	6	5fa
4b1	WINGWALL, B.F.H. LONG		1	54'-3	37	1	45'-11	32	1	37'-7	25	1	29'-3	20	1	54'-3	37	1	45'-11	32	1	37'-7	25	1	29'-3	20	4b1
4b2	WINGWALL, B.F.H. SHORT		1	41'-3	29	1	35'-1	23	1	28'-10	19	1	22'-7	15	1	41'-3	29	1	35'-1	23	1	28'-10	19	1	22'-7	15	4b2
4b3	WINGWALL, B.F.H. LONG		10 VAR	14'-9: 52'-4	228	8 VAR	14'-9: 44'-0	158	6 VAR	14'-9: 35'-7	101	4 VAR	14'-9: 27'-4	56	10 VAR	14'-9: 52'-4	228	8 VAR	14'-9: 44'-0	158	6 VAR	14'-9: 35'-7	101	4 VAR	14'-9: 27'-4	56	4b3
4b4	WINGWALL, B.F.H. SHORT		10 VAR	11'-11: 39'-10	173	8 VAR	11'-11: 33'-8	122	6 VAR	11'-11: 27'-5	79	4 VAR	11'-11: 21'-2	44	10 VAR	11'-11: 39'-10	173	8 VAR	11'-11: 33'-8	122	6 VAR	11'-11: 27'-5	79	4 VAR	11'-11: 21'-2	44	4b4
5b5	WINGWALL, F.F.H. LONG		1	54'-3	59	1	45'-11	50	1	37'-7	39	1	29'-3	31	1	54'-3	59	1	45'-11	50	1	37'-7	39	1	29'-3	31	5b5
5b6	WINGWALL, F.F.H. SHORT		1	41'-3	45	1	35'-1	37	1	28'-10	30	1	22'-7	24	1	41'-3	45	1	35'-1	37	1	28'-10	30	1	22'-7	24	5b6
5b7	WINGWALL, F.F.H. LONG		11 VAR	10'-7: 52'-4	367	9 VAR	10'-7: 44'-0	258	7 VAR	10'-7: 35'-7	169	5 VAR	10'-7: 27'-4	99	11 VAR	10'-7: 52'-4	367	9 VAR	10'-7: 44'-0	258	7 VAR	10'-7: 35'-7	169	5 VAR	10'-7: 27'-4	99	5b7
5b8	WINGWALL, F.F.H. SHORT		11 VAR	8'-8: 39'-10	278	9 VAR	8'-8: 33'-8	199	7 VAR	8'-8: 27'-5	132	5 VAR	8'-8: 21'-2	78	11 VAR	8'-8: 39'-10	278	9 VAR	8'-8: 33'-8	199	7 VAR	8'-8: 27'-5	132	5 VAR	8'-8: 21'-2	78	5b8
5b9	CENTER WALLS, BOTH F.H.		42 VAR	5'-4: 30'-9	790	34 VAR	5'-4: 26'-2	559	26 VAR	5'-5: 21'-6	365	18 VAR	5'-6: 16'-11	210	42 VAR	5'-4: 30'-9	790	34 VAR	5'-4: 26'-2	559	26 VAR	5'-5: 21'-6	365	18 VAR	5'-6: 16'-11	210	5b9
4c1	WINGWALL, F.F.V. LONG		51 VAR	2'-10: 14'-10	301	43 VAR	2'-10: 12'-11	226	35 VAR	2'-10: 11'-0	162	26 VAR	2'-10: 8'-10	101	51 VAR	2'-9: 14'-9	298	43 VAR	2'-9: 12'-10	224	35 VAR	2'-9: 10'-11	160	26 VAR	2'-9: 8'-9	100	4c1
4c2	WINGWALL, F.F.V. SHORT		38 VAR	2'-11: 14'-9	224	32 VAR	2'-11: 12'-10	168	26 VAR	2'-11: 10'-11	120	20 VAR	2'-11: 9'-0	80	38 VAR	2'-10: 14'-8	222	32 VAR	2'-10: 12'-9	167	26 VAR	2'-10: 10'-10	119	20 VAR	2'-10: 8'-11	78	4c2
4c3	WINGWALL, F.F.V. LONG		2	13'-9	18	2	11'-9	16	1	9'-9	7	2	7'-9	10	2	13'-8	18	2	11'-8	16	1	9'-8	6	2	7'-8	10	4c3
4c3	WINGWALL, F.F.V. SHORT		2	13'-9	18	2	11'-9	16	1	9'-9	7	1	7'-9	5	2	13'-8	18	2	11'-8	16	1	9'-8	6	1	7'-8	5	4c3
4c4	CENTER WALLS, BOTH F.V.		4	1'-9	5	4	1'-9	5	4	1'-9	5	4	1'-9	5	4	1'-8	4	4	1'-8	4	4	1'-8	4	4	1'-8	4	4c4
4c5	CENTER WALLS, BOTH F.V.		108 VAR	1'-11: 12'-5	517	90 VAR	1'-11: 10'-5	371	72 VAR	1'-11: 8'-5	249	54 VAR	1'-11: 6'-6	152	108 VAR	1'-10: 12'-4	511	90 VAR	1'-10: 10'-4	366	72 VAR	1'-10: 8'-4	244	54 VAR	1'-10: 6'-5	149	4c5
4c6	CENTER WALLS, BOTH F.V.		4	12'-7	34	4	10'-7	28	4	8'-7	23	4	6'-7	18	4	12'-6	33	4	10'-6	28	4	8'-6	23	4	6'-6	17	4c6
5c7	WINGWALL, B.F.V. LONG		11 VAR	2'-10: 5'-2	46	11 VAR	2'-10: 5'-2	46	11 VAR	2'-10: 5'-2	46	11 VAR	2'-10: 5'-2	46	11 VAR	2'-9: 5'-1	45	11 VAR	2'-9: 5'-1	45	11 VAR	2'-9: 5'-1	45	11 VAR	2'-9: 5'-1	45	5c7
5c8	WINGWALL, B.F.V. SHORT		5 VAR	2'-11: 4'-2	18	5 VAR	2'-11: 4'-2	18	5 VAR	2'-11: 4'-2	18	5 VAR	2'-11: 4'-2	18	5 VAR	2'-10: 4'-1	18	5 VAR	2'-10: 4'-1	18	5 VAR	2'-10: 4'-1	18	5 VAR	2'-10: 4'-1	18	5c8
5c9	WINGWALL, B.F.V. LONG		40 VAR	9'-6: 18'-10	591	32 VAR	9'-6: 16'-11	441	24 VAR	9'-6: 15'-0	307	15 VAR	9'-6: 12'-10	175	40 VAR	9'-5: 18'-9	588	32 VAR	9'-5: 16'-10	438	24 VAR	9'-5: 14'-11	305	15 VAR	9'-5: 12'-9	173	5c9
5c10	WINGWALL, B.F.V. SHORT		33 VAR	8'-6: 18'-9	469	27 VAR	8'-6: 16'-10	357	21 VAR	8'-6: 14'-11	256	15 VAR	8'-6: 13'-0	168	33 VAR	8'-5: 18'-8	466	27 VAR	8'-5: 16'-9	354	21 VAR	8'-5: 14'-10	255	15 VAR	8'-5: 12'-11	167	5c10
5c11	WINGWALL, B.F.V. LONG		30	10'-6	329	22	10'-6	241	13	10'-6	142	—	—	—	30	10'-6	329	22	10'-6	241	13	10'-6	142	—	—	—	5c11
5c11	WINGWALL, B.F.V. SHORT		21	10'-6	230	15	10'-6	164	8	10'-6	88	—	—	—	21	10'-6	230	15	10'-6	164	8	10'-6	88	—	—	—	5c11
5c12	WINGWALL, B.F.V. LONG		2	17'-9	37	2	15'-9	33	1	13'-9	14	2	11'-9	25	2	17'-8	37	2	15'-8	33	1	13'-8	14	2	11'-8	24	5c12
5c12	WINGWALL, B.F.V. SHORT		2	17'-9	37	2	15'-9	33	1	13'-9	14	1	11'-9	12	2	17'-8	37	2	15'-8	33	1	13'-8	14	1	11'-8	12	5c12
4d1	APRON, LONGIT., BOTTOM		25	31'-3	522	25	26'-8	445	25	22'-1	369	25	17'-5	291	21	31'-3	438	21	26'-8	374	21	22'-1	310	21	17'-5	244	4d1
4d2	APRON, LONGIT., BOTT. LONG		3	48'-0	100	3	39'-7	79	3	31'-4	63	3	23'-1	47	3	48'-0	100	3	39'-7	79	3	31'-4	63	3	23'-1	47	4d2
4d3	APRON, LONGIT. BOTT. SHORT		3	36'-9	74	3	30'-8	61	3	24'-5	49	3	18'-4	37	3	36'-9	74	3	30'-8	61	3	24'-5	49	3	18'-4	37	4d3
6f1	APRON, LONGIT., TOP		37	31'-3	1737	37	26'-8	1482	37	22'-1	1227	37	17'-5	968	31	31'-3	1455	31	26'-8	1242	31	22'-1	1028	31	17'-5	811	6f1
6f2	APRON, LONGIT., TOP, LONG		11 VAR	5'-4: 28'-6	279	9 VAR	5'-4: 23'-10	197	7 VAR	5'-4: 19'-3	129	5 VAR	5'-3: 14'-7	74	11 VAR	5'-4: 28'-6	279	9 VAR	5'-4: 23'-10	197	7 VAR	5'-4: 19'-3	129	5 VAR	5'-3: 14'-7	74	6f2
6f3	APRON, LONGIT., TOP SHORT		8 VAR	7'-0: 28'-9	215	7 VAR	5'-5: 24'-1	155	5 VAR	6'-11: 19'-6	99	4 VAR	5'-5: 14'-10	61	8 VAR	7'-0: 28'-9	215	7 VAR	5'-5: 24'-1	155	5 VAR	6'-11: 19'-6	99	4 VAR	5'-5: 14'-10	61	6f3
6f4	APRON, LONGIT., TOP, LONG		1	54'-3	84	1	45'-11	72	1	37'-7	56	1	29'-3	44	1	54'-3	84	1	45'-11	72	1	37'-7	56	1	29'-3	44	6f4
6f5	APRON, LONGIT., TOP SHORT		1	41'-3	65	1	35'-1	53	1	28'-10	43	1	22'-7	34	1	41'-3	65	1	35'-1	53	1	28'-10	43	1	22'-7	34	6f5
4i1	PARAPET, VERTICAL		79	6'-4	334	77	6'-4	326	77	6'-4	326	77	6'-4	326	67	6'-4	283	65	6'-4	275	65	6'-4	275	65	6'-4	275	4i1
7j1	PARAPET, HORIZONTAL		4	45'-9	392	4	45'-0	386	4	45'-0	386	4	44'-7	382	4	38'-10	317	4	38'-1	311	4	38'-1	311	4	37'-8	308	7j1
6m1	APRON, TRANS., TOP		16 VAR	45'-6: 42'-8	1124	16 VAR	44'-10: 42'-0	1107	13 VAR	44'-3: 42'-0	894	7 VAR	42'-9: 41'-8	472	14 VAR	38'-8: 36'-3	788	14 VAR	38'-0: 35'-7	774	15 VAR	38'-2: 35'-7	831	9 VAR	36'-9: 35'-3	487	6m1
6m2	APRON, TRANS., TOP		9 VAR	48'-9: 45'-9	675	3 VAR	45'-10: 45'-1	217	3 VAR	37'-3: 34'-8	162	9 VAR	36'-11: 26'-6	429	13 VAR	43'-6: 39'-0	846	7 VAR	40'-7: 38'-4	423	24 VAR	32'-0: 6'-5	692	5 VAR	31'-4: 26'-1	216	6m2
6m3	APRON, TRANS., TOP		29 VAR	39'-9: 8'-8	1054	29 VAR	38'-1: 7'-0	982	25 VAR	33'-5: 6'-9	754	—	—	—	24 VAR	35'-0: 9'-5	801	24 VAR	33'-4: 7'-9	740	—	—	—	19 VAR	25'-0: 5'-0	428	6m3
6m5	APRON, TRANS., BOTTOM		24 VAR	54'-7: 38'-11	1757	20 VAR	51'-6: 38'-6	1407	16 VAR	48'-9: 38'-6	1091	12 VAR	45'-10: 38'-4	788	24 VAR	47'-8: 32'-0	1475	20 VAR	44'-7: 31'-7	1167	16 VAR	41'-10: 31'-7	892	12 VAR	38'-11: 31'-5	634	6m5
6p1	CURTAIN, HORIZONTAL		4	44'-0	280	4	43'-8	278	4	43'-7	278	4	43'-5	277	4	37'-1	223	4	36'-8	220	4	36'-8	220	4	36'-6	219	6p1
6p2	CURTAIN, HORIZ. LONG		4	28'-1	169	4	24'-0	144	4	20'-0	120	4	16'-0	96	4	28'-1	169	4	24'-0	144	4	20'-0	120	4	16'-0	96	6p2
6p3	CURTAIN, HORIZ. SHORT		4	16'-0	96	4	13'-11	84	4	11'-10	71	4	9'-9	59	4	16'-0	96	4	13'-11	84	4	11'-10	71	4	9'-9	59	6p3
6s1	WING SLOPE, BOTH F. LONG		2	8'-0	24	2	8'-0	24	2	8'-0	24	2	8'-0	24	2	8'-0	24	2	8'-0	24	2	8'-0	24	2	8'-0	24	6s1
6s2	WING SLOPE, BOTH F. SHORT		2	6'-11	21	2	6'-11	21	2	6'-11	21	2	6'-11	21	2	6'-11	21	2	6'-11	21	2	6'-11	21	2	6'-11	21	6s2
6s3	WING SLOPE, BOTH F. LONG		2	49'-4	154	2	40'-9	128	2	32'-2	97	2	23'-7	71	2	49'-4	154	2	40'-9	128	2	32'-2	97	2	23'-7	71	6s3
6s4	WING SLOPE, BOTH F. SHORT		2	38'-6	116	2	31'-11	96	2	25'-4	76	2	18'-10	57	2	38'-6	116	2	31'-11	96	2	25'-4	76	2	18'-10	57	6s4
6s5	WING SLOPE, F.F. LONG		1	54'-7	85	1	46'-0	72	1	37'-5	56	1	28'-10	43	1	54'-7	85	1	46'-0	72	1	37'-5	56	1	28'-10	43	6s5
6s6	WING SLOPE, F.F. SHORT		1	42'-8	67	1	36'-1	54	1	29'-6	44	1	23'-0	35	1	42'-8	67	1	36'-1	54	1	29'-6	44	1	23'-0	35	6s6
6s7	CENTER WALL, BOTH F.HOR.		4	32'-11	198	4	27'-11	168	4	22'-11	138	4	17'-11	108	4	32'-11	198	4	27'-11	168	4	22'-11	138	4	17'-11	108	6s7
5t1	CURTAIN, VERTICAL		60	7'-11	495	55	7'-5	425	50	6'-11	361	45	6'-5	301	54	7'-11	446	49	7'-5	379	44	6'-11	317	39	6'-5	261	5t1

ESTIMATED QUANTITIES ONE HEADWALL			12'-0 x 12'-0	12'-0 x 10'-0	12'-0 x 8'-0	12'-0 x 6'-0	10'-0 x 12'-0	10'-0 x 10'-0	10'-0 x 8'-0	10'-0 x 6'-0
REINFORCING STEEL			15,003 LBS	12,070 LBS	9357 LBS	6443 LBS	13,685 LBS	10,904 LBS	8370 LBS	6079 LBS
CONC.	PARAPET △		4.3	4.1	4.1	4.0	3.8	3.6	3.6	3.5
	WINGWALLS		39.6	23.7	15.9	8.6	39.6	23.7	15.9	8.6
	FOOTING△△		89.3	71.1	55.5	40.8	76.5	60.4	47.0	34.3
			133.2 CU. YD.	98.9 CU. YD.	75.5 CU. YD.	53.4 CU. YD.	119.9 CU. YD.	87.7 CU. YD.	66.5 CU. YD.	46.4 CU. YD.

BENT BAR DETAILS

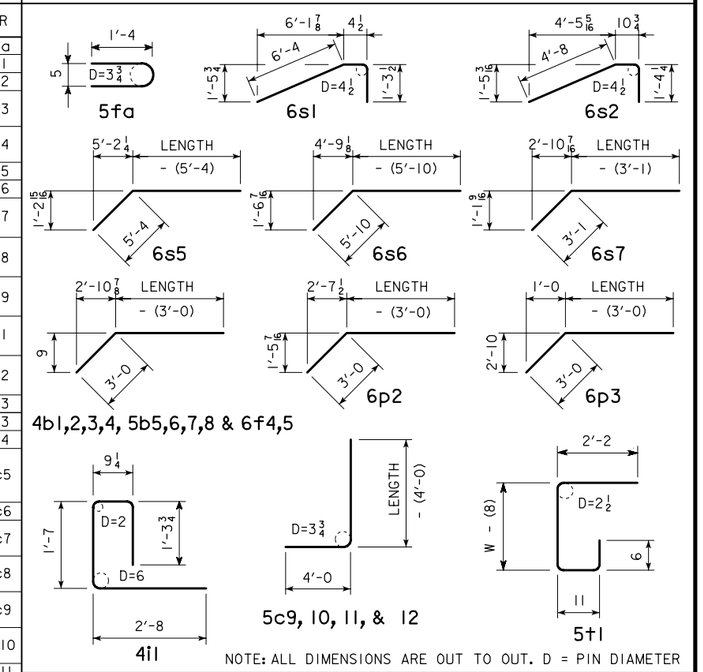

"SHORT" DENOTES SHORT WINGWALL

"LONG" DENOTES LONG WINGWALL

VARIABLE LENGTH BARS DENOTED BY X:Y

WEIGHT OF BARS OVER 40'-0 LONG INCLUDES AN ALLOWANCE FOR LAP (2'-8 FOR TOP APRON "m" BARS AND 2'-2 ALL OTHER BARS).
LENGTHS SHOWN FOR BARS OVER 40'-0 LONG DO NOT INCLUDE LAP (2'-8 FOR TOP APRON "m" BARS AND 2'-2 ALL OTHER).

△ NOTE: INCLUDES TOP OF WINGWALL QUANTITIES.

△ ASSUMES APRON AND FLOOR ARE EQUAL THICKNESS, ADJUST CONCRETE QUANTITIES FOR TRANSITION WHERE APRON AND FLOOR THICKNESS ARE NOT EQUAL.

HEADWALL NOTES:

SEE SHEET TRRCB-GI-01 FOR GENERAL INFORMATION, SPECIFICATIONS, AND DESIGN STRESSES.

THIS HEADWALL IS BASED ON A 3:1 SLOPE NORMAL TO CENTERLINE OF ROADWAY.

THE SIDES OF THE FOOTING ARE TO BE FORMED TO INSURE CORRECT LINE AND GRADE.

ALL EXPOSED CORNERS OF 90° OR SHARPER ARE TO BE FILLETED WITH A $\frac{3}{4}$" DRESSED AND BEVELED STRIP.

ALL REINFORCING IS TO BE SECURELY WIRED IN PLACE BEFORE THE CONCRETE IS POURED. ALL SLAB AND FLOOR REINFORCING STEEL IS TO BE SUPPORTED BY BAR CHAIRS AT INTERVALS OF NOT MORE THAN 3'-0 IN EITHER DIRECTION AS OUTLINED IN THE STANDARD SPECIFICATIONS.

CLEAR DISTANCE FROM FACE OF CONCRETE TO NEAR REINFORCING BAR IS TO BE 2" UNLESS OTHERWISE NOTED OR SHOWN.

CONCRETE QUANTITIES ARE ESTIMATED FROM BACK OF PARAPET.

HORIZONTAL TAILS OF BARS "b" & "s" ESTIMATED TO EXTEND 2'-0 BEYOND BACK OF PARAPET (INTO END OF BARREL). LONGITUDINAL BARS "d", "6f1", "6f4", AND "6f5" ESTIMATED TO PROJECT INTO END SECTION OF BARREL A MINIMUM OF 2'-0 BEYOND BACK OF PARAPET.

THE "LENGTH" COLUMN REFLECTS TOTAL NUMBER OF FEET NECESSARY TO MEET THESE REQUIREMENTS.

LATEST REVISION DATE : 06-02

APPROVED BY :

STANDARD DESIGN

FLARED WING HEADWALLS

FOR

TRIPLE REINFORCED CONCRETE BOX CULVERTS

IOWA DEPARTMENT OF TRANSPORTATION - HIGHWAY DIVISION

SEPT., 2001

TRH 30-5-01

REVISED 06-02 - 4i1 BARS NUMBER CHANGED.
TRH 30-5-01 - 09-01 THIS SHEET ISSUED.

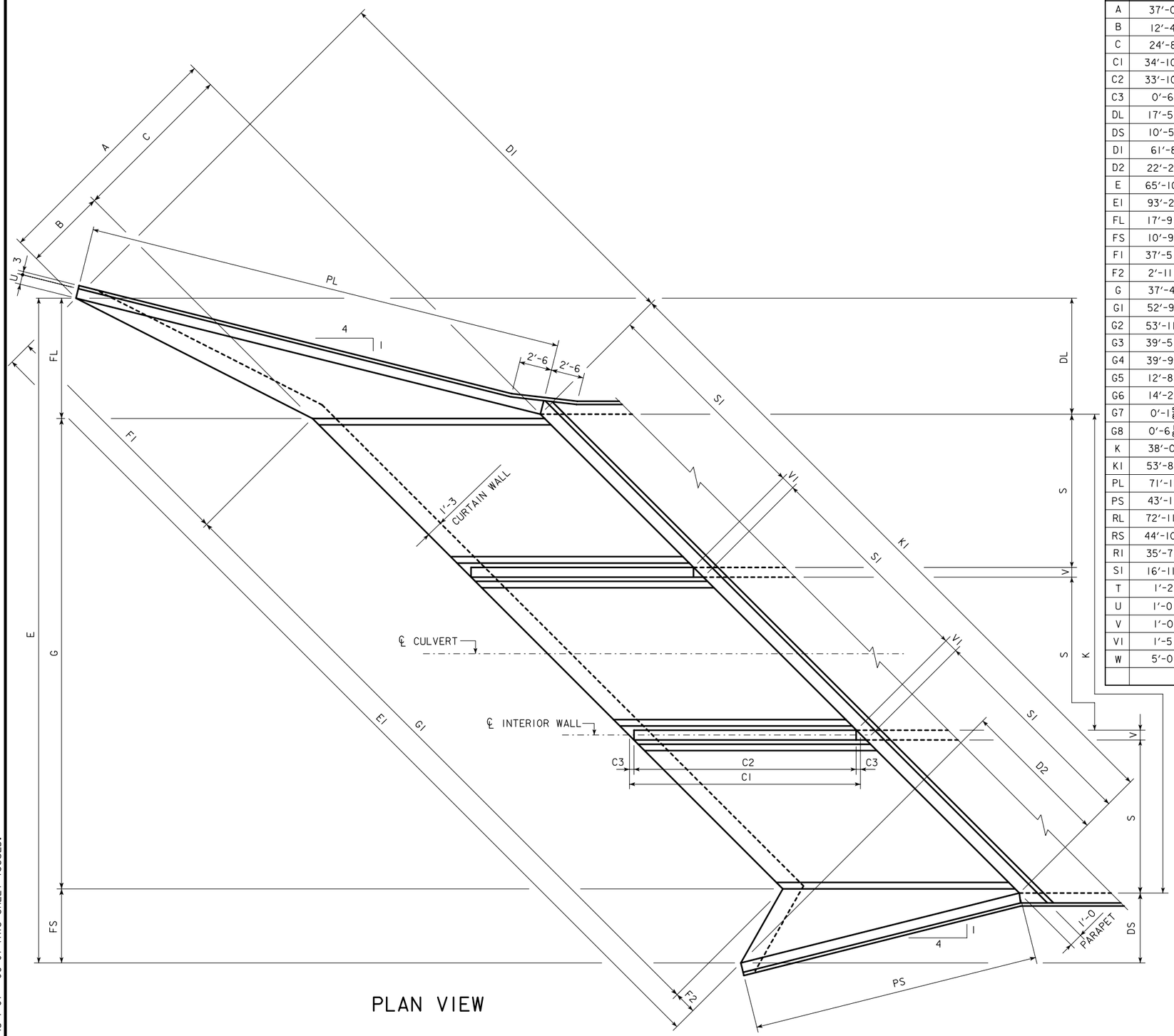

PLAN VIEW

DIMENSIONS TABLE

SxH	12' x 12'	12' x 10'	12' x 8'	12' x 6'	10' x 12'	10' x 10'	10' x 8'	10' x 6'	SxH
A	37'-0	31'-0	25'-0	19'-0	37'-0	31'-0	25'-0	19'-0	A
B	12'-4	10'-4	8'-4	6'-4	12'-4	10'-4	8'-4	6'-4	B
C	24'-8	20'-8	16'-8	12'-8	24'-8	20'-8	16'-8	12'-8	C
C1	34'-10 5/8	29'-2 3/4	23'-6 7/8	17'-11	34'-10 5/8	29'-2 3/4	23'-6 7/8	17'-11	C1
C2	33'-10 5/8	28'-4 3/4	22'-8 7/8	17'-2	33'-10 5/8	28'-4 3/4	22'-8 7/8	17'-2	C2
C3	0'-6	0'-5	0'-5	0'-4 1/2	0'-6	0'-5	0'-5	0'-4 1/2	C3
DL	17'-5 1/4	14'-7 3/8	11'-9 3/8	8'-11 1/2	17'-5 1/4	14'-7 3/8	11'-9 3/8	8'-11 1/2	DL
DS	10'-5 5/8	8'-9 1/4	7'-0 7/8	5'-4 1/2	10'-5 5/8	8'-9 1/4	7'-0 7/8	5'-4 1/2	DS
D1	61'-8	51'-8	41'-8	31'-8	61'-8	51'-8	41'-8	31'-8	D1
D2	22'-2 3/8	18'-7 1/4	15'-0	11'-4 3/4	22'-2 3/8	18'-7 1/4	15'-0	11'-4 3/4	D2
E	65'-10 7/8	61'-0 5/8	56'-6 1/4	51'-10	59'-10 7/8	55'-0 5/8	50'-6 1/4	45'-10	E
E1	93'-2 3/8	86'-4	79'-11 1/8	73'-3 5/8	84'-8 5/8	77'-10 1/4	71'-5 3/8	64'-9 3/4	E1
FL	17'-9 1/4	14'-11 3/8	12'-1 3/8	9'-3 1/2	17'-9 1/4	14'-11 3/8	12'-1 3/8	9'-3 1/2	FL
FS	10'-9 5/8	9'-1 1/4	7'-4 7/8	5'-8 1/2	10'-9 5/8	9'-1 1/4	7'-4 7/8	5'-8 1/2	FS
F1	37'-5 5/8	31'-5 5/8	25'-5 5/8	19'-5 5/8	37'-5 5/8	31'-5 5/8	25'-5 5/8	19'-5 5/8	F1
F2	2'-11 1/4	2'-6 1/2	2'-1 5/8	1'-8 7/8	2'-11 1/4	2'-6 1/2	2'-1 5/8	1'-8 7/8	F2
G	37'-4	37'-0	37'-0	36'-10	31'-4	31'-0	31'-0	30'-10	G
G1	52'-9 1/2	52'-3 7/8	52'-3 7/8	52'-1 1/8	44'-3 3/4	43'-10 1/8	43'-10 1/8	43'-7 1/4	G1
G2	53'-11 7/8	53'-6 1/8	53'-5 7/8	53'-2 7/8	45'-6	45'-0 1/4	45'-0 1/8	44'-9 1/8	G2
G3	39'-5 3/8	33'-1 1/2	26'-9 5/8	20'-5 3/4	39'-5 3/8	33'-1 1/2	26'-9 5/8	20'-5 3/4	G3
G4	39'-9 1/2	32'-8 1/2	26'-4 3/4	19'-8 3/8	39'-9 1/2	32'-8 1/2	26'-4 3/4	19'-8 3/8	G4
G5	12'-8 1/8	10'-7 3/4	8'-7 1/4	6'-6 3/4	12'-8 1/8	10'-7 3/4	8'-7 1/4	6'-6 3/4	G5
G6	14'-2 1/8	11'-10 3/4	9'-10 3/8	7'-8 1/2	14'-2 1/8	11'-10 3/4	9'-10 3/8	7'-8 1/2	G6
G7	0'-1 5/8	0'-10 1/2	0'-10 1/2	1'-2 3/4	0'-1 5/8	0'-10 1/2	0'-10 1/2	1'-2 3/4	G7
G8	0'-6 1/8	0'-8 1/4	0'-8 1/4	0'-9 1/4	0'-6 1/8	0'-8 1/4	0'-8 1/4	0'-9 1/4	G8
K	38'-0	37'-8	37'-8	37'-6	32'-0	31'-8	31'-8	31'-6	K
K1	53'-8 7/8	53'-3 1/4	53'-3 1/4	53'-0 3/8	45'-3	44'-9 3/8	44'-9 3/8	44'-6 1/2	K1
PL	71'-11	60'-3	48'-7 1/8	36'-11 1/8	71'-11	60'-3	48'-7 1/8	36'-11 1/8	PL
PS	43'-1 3/4	36'-1 7/8	29'-1 7/8	22'-1 7/8	43'-1 3/4	36'-1 7/8	29'-1 7/8	22'-1 7/8	PS
RL	72'-11 5/8	61'-1 5/8	49'-3 5/8	37'-5 5/8	72'-11 5/8	61'-1 5/8	49'-3 5/8	37'-5 5/8	RL
RS	44'-10 1/2	37'-7 1/4	30'-3 7/8	23'-0 1/2	44'-10 1/2	37'-7 1/4	30'-3 7/8	23'-0 1/2	RS
R1	35'-7 1/2	29'-9 3/8	23'-9 1/2	17'-10 1/2	35'-7 1/2	29'-9 3/8	23'-9 1/2	17'-10 1/2	R1
S1	16'-11 5/8	16'-11 5/8	16'-11 5/8	16'-11 5/8	14'-1 3/4	14'-1 3/4	14'-1 3/4	14'-1 3/4	S1
T	1'-2	1'-2	1'-2	1'-2	1'-1	1'-1	1'-1	1'-1	T
U	1'-0	0'-10	0'-10	0'-9	1'-0	0'-10	0'-10	0'-9	U
V	1'-0	0'-10	0'-10	0'-9	1'-0	0'-10	0'-10	0'-9	V
V1	1'-5	1'-2 1/8	1'-2 1/8	1'-0 3/4	1'-5	1'-2 1/8	1'-2 1/8	1'-0 3/4	V1
W	5'-0	4'-6	4'-0	3'-6	5'-0	4'-6	4'-0	3'-6	W

HEADWALL NOTES:

1. SEE SHEET TRRCB-G1-01 FOR GENERAL INFORMATION, SPECIFICATIONS, AND DESIGN STRESSES.
2. SEE SHEETS TRH 45-2-01 THRU TRH 45-5-01 FOR LOCATION OF CERTAIN DIMENSIONS TABULATED.
3. SEE SHEET TRH 45-6-01 FOR HEADWALL NOTES.

LATEST REVISION DATE : 10-09

APPROVED BY :

STANDARD DESIGN

FLARED WING HEADWALLS

FOR

TRIPLE REINFORCED CONCRETE BOX CULVERTS

IOWA DEPARTMENT OF TRANSPORTATION - HIGHWAY DIVISION

SEPT., 2001

TRH 45-1-01

CORRECTION 10-09 - MOVED THE "S", "V", "DL" & "K" DIMENSIONS SO THEY ARE NOT ON TOP OF THE DIMENSION TABLE.
TRH 45-1-01 - 09-01 THIS SHEET ISSUED.

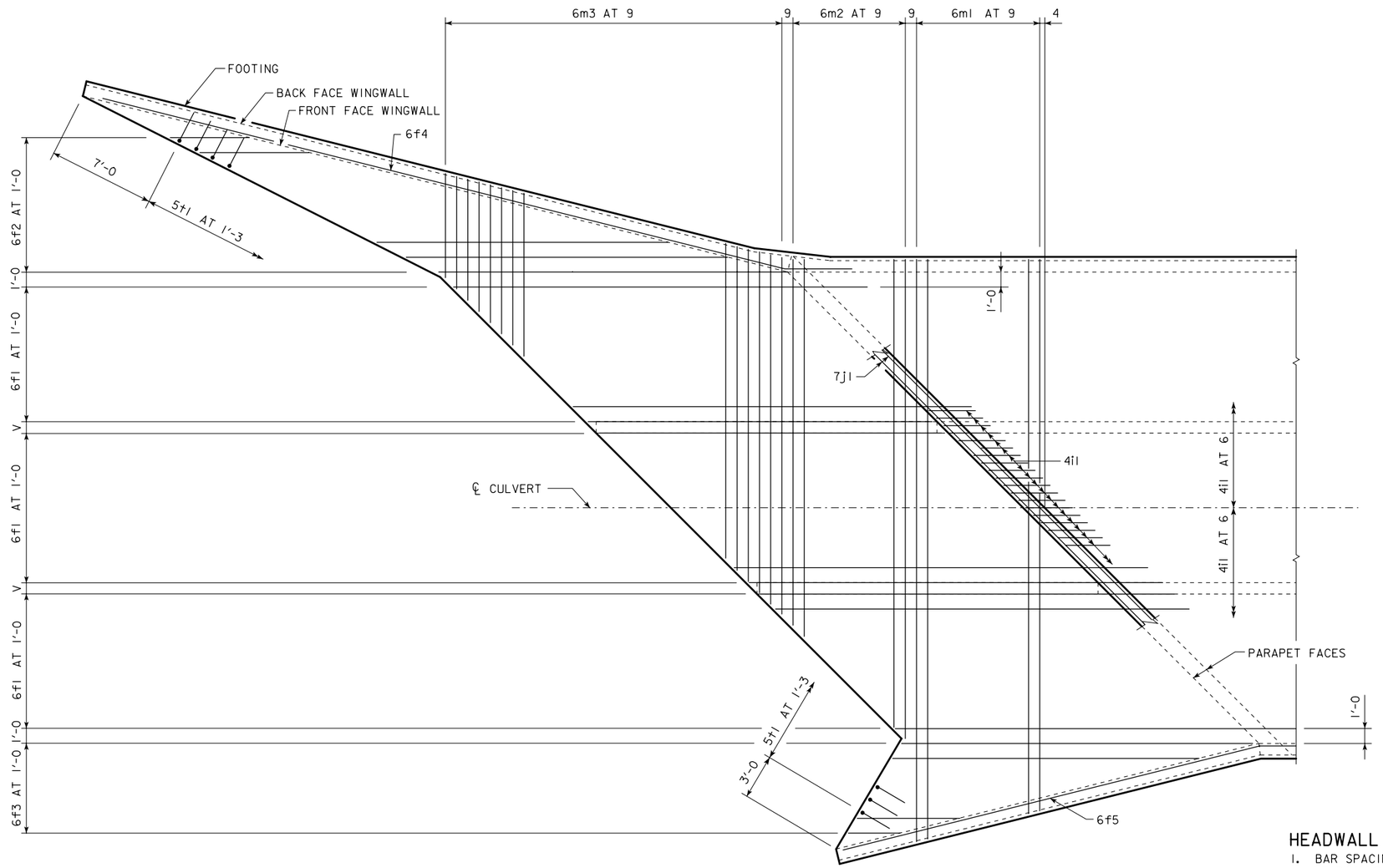

PLAN VIEW - TOP OF APRON REINFORCING BARS

HEADWALL NOTES:

1. BAR SPACING AND POSITIONS SHOWN ARE SIMILAR FOR ALL SIZES OF HEADWALLS IN THIS STANDARD.
2. WINGWALL BARS CONSISTENTLY REFERENCED FROM END OF WING FOR ALL HEADWALLS.
3. TOP TRANSVERSE FLOOR BARS ARE REFERENCED APPROXIMATELY 4" FROM THE BACK OF THE PARAPET FOR ALL HEADWALLS.
4. FOR DIMENSION TABLE SEE SHEET TRH 45-1-01.
5. FOR REINFORCING IN CURTAIN WALL SEE CURTAIN WALL DETAILS ON SHEET TRH 45-4-01.

LATEST REVISION DATE :

APPROVED BY :

STANDARD DESIGN

FLARED WING HEADWALLS

FOR

TRIPLE REINFORCED CONCRETE BOX CULVERTS

IOWA DEPARTMENT OF TRANSPORTATION - HIGHWAY DIVISION

SEPT., 2001

TRH 45-2-01

TRH 45-2-01 - 09-01 THIS SHEET ISSUED.

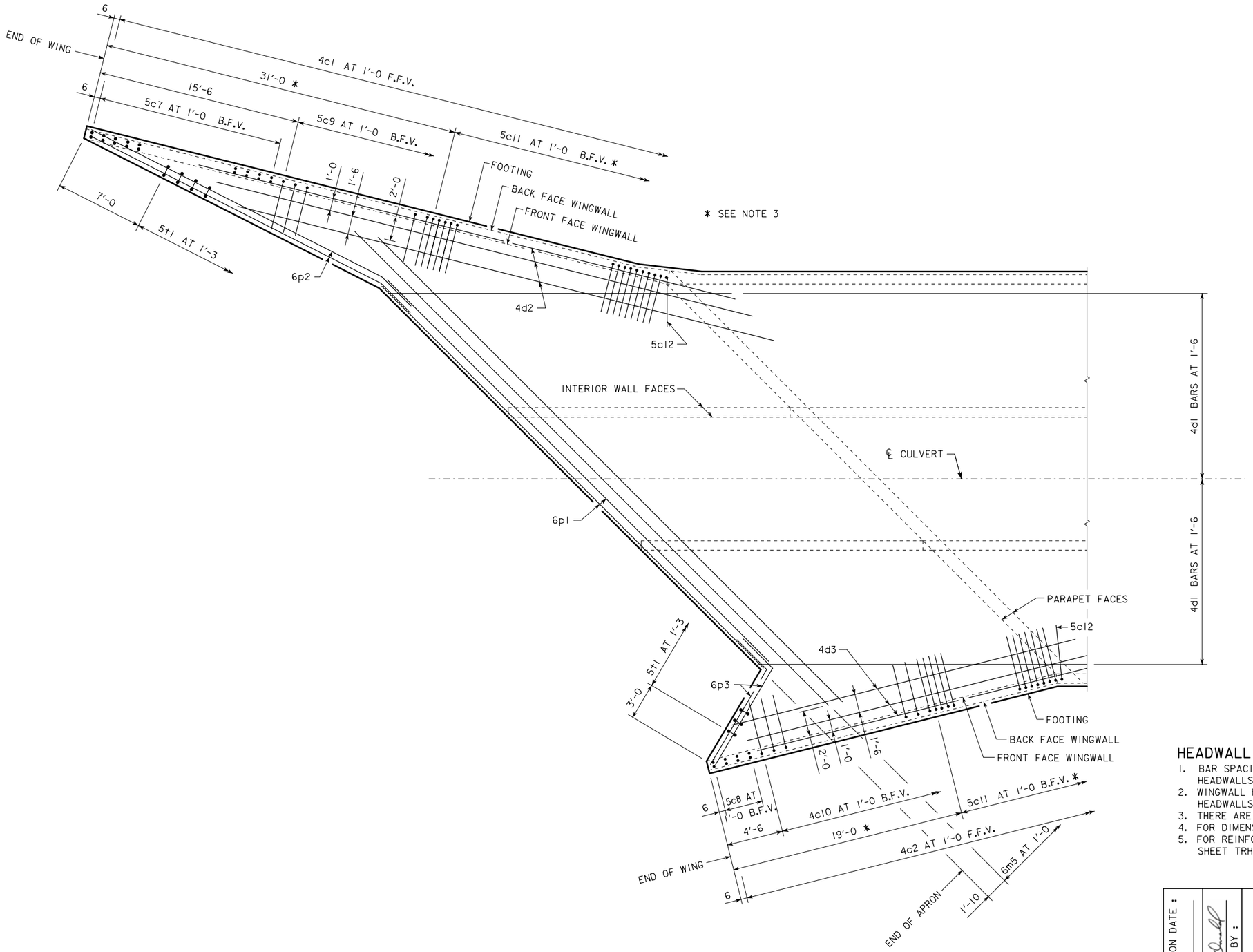

PLAN VIEW - BOTTOM OF APRON REINFORCING BARS

HEADWALL NOTES:

1. BAR SPACINGS AND POSITIONS SHOWN ARE SIMILAR FOR ALL SIZES OF HEADWALLS IN THIS STANDARD.
2. WINGWALL BARS CONSISTENTLY REFERENCED FROM END OF WING FOR ALL HEADWALLS.
3. THERE ARE NO 5c11 BARS IN THE 6'-0 HEIGHT HEADWALL.
4. FOR DIMENSION TABLE SEE SHEET TRH 45-1-01.
5. FOR REINFORCING IN CURTAIN WALL SEE CURTAIN WALL DETAILS ON SHEET TRH 45-4-01.

LATEST REVISION DATE :

APPROVED BY :

STANDARD DESIGN

FLARED WING HEADWALLS

FOR

TRIPLE REINFORCED CONCRETE BOX CULVERTS

IOWA DEPARTMENT OF TRANSPORTATION - HIGHWAY DIVISION

SEPT., 2001

TRH 45-3-01

TRH 45-3-01 - 09-01 THIS SHEET ISSUED.

CULVERT HEIGHT (H)	ANGLE	
	ØL	ØS
6'-0	26°59'	60°21'
8'-0	26°53'	59°23'
10'-0	26°49'	58°48'
12'-0	26°47'	58°24'

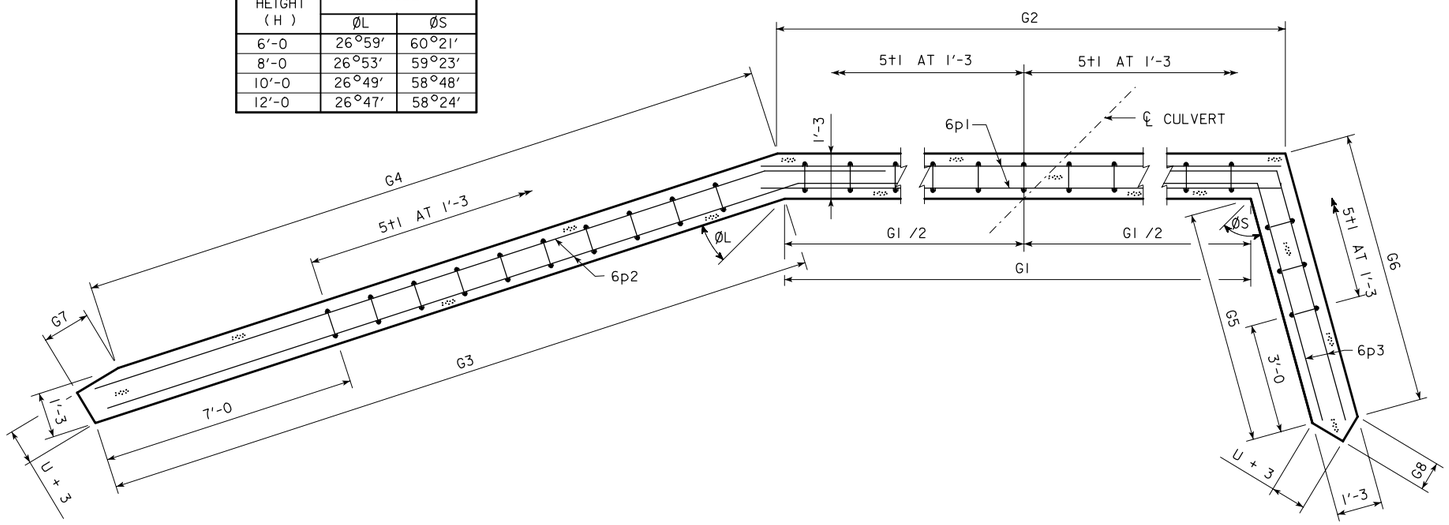

CURTAIN WALL PLAN

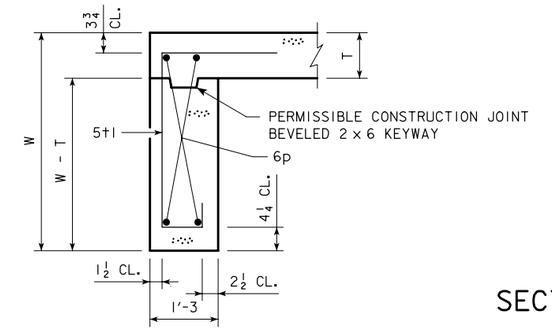

SECTION THRU CURTAIN WALL

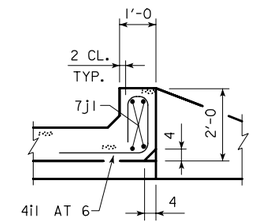

SECTION THRU PARAPET

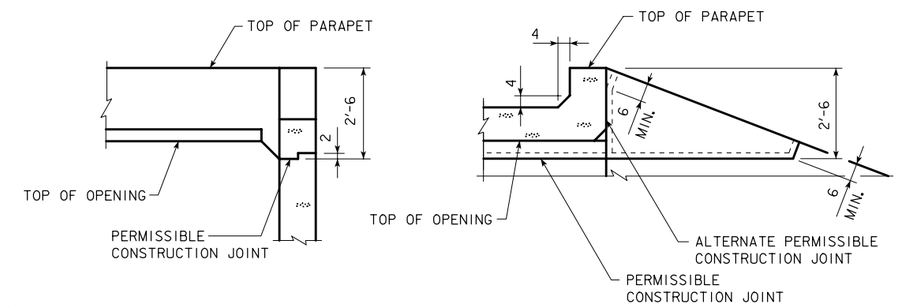

TOP OF WINGWALL DETAILS

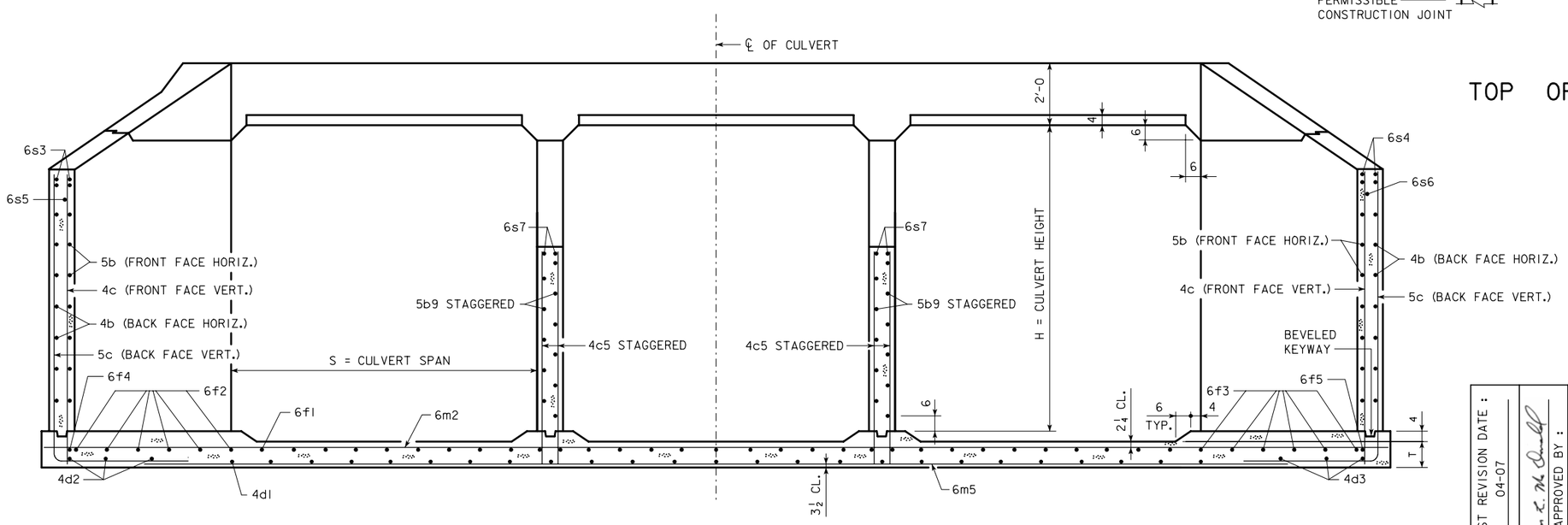

TYPICAL SECTION - NEAR CENTER OF APRON

HEADWALL NOTES:

1. SEE SHEET TRRCB-GI-01 FOR GENERAL INFORMATION, SPECIFICATIONS, AND DESIGN STRESSES.
2. FOR DIMENSION TABLE SEE SHEET TRH 45-1-01.

LATEST REVISION DATE : 04-07

APPROVED BY :

STANDARD DESIGN

FLARED WING HEADWALLS

FOR

TRIPLE REINFORCED CONCRETE BOX CULVERTS

IOWA DEPARTMENT OF TRANSPORTATION - HIGHWAY DIVISION

SEPT., 2001

TRH 45-4-01

REVISION - 04-07 - ADDED PERMISSIBLE CONSTRUCTION JOINT IN CURTAIN WALL.
TRH 45-4-01 - 09-01 THIS SHEET ISSUED.

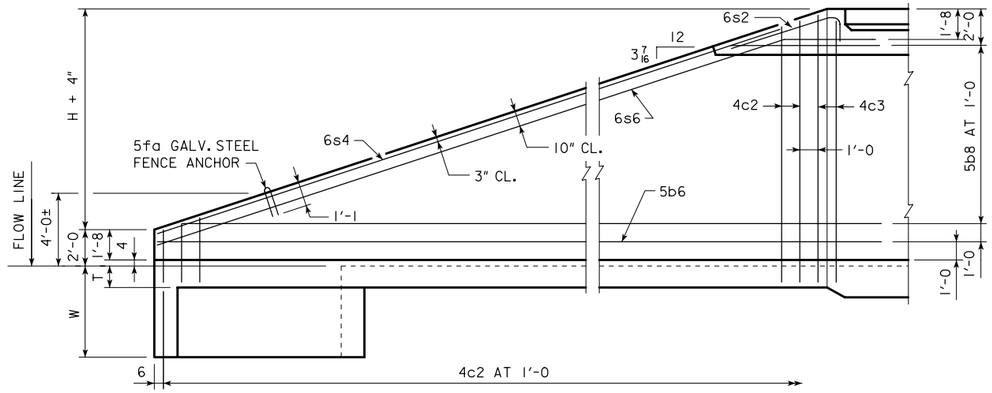

TYPICAL VIEW - FRONT FACE REINFORCING SHORT WINGWALL

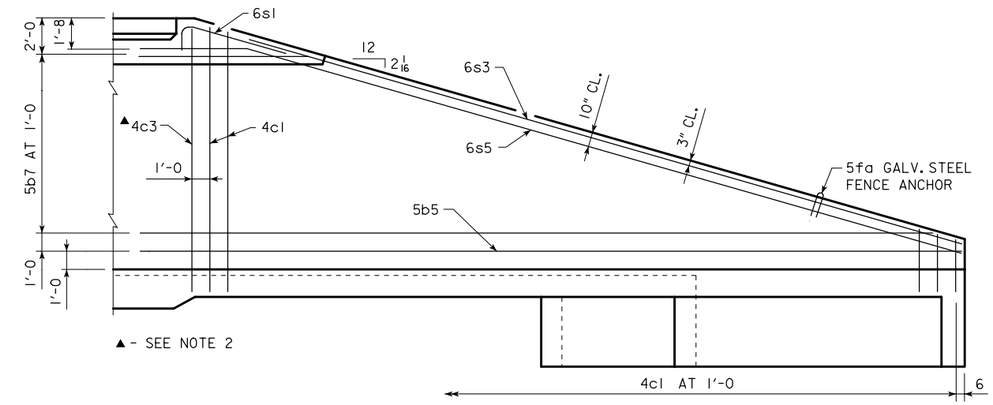

TYPICAL VIEW - FRONT FACE REINFORCING LONG WINGWALL

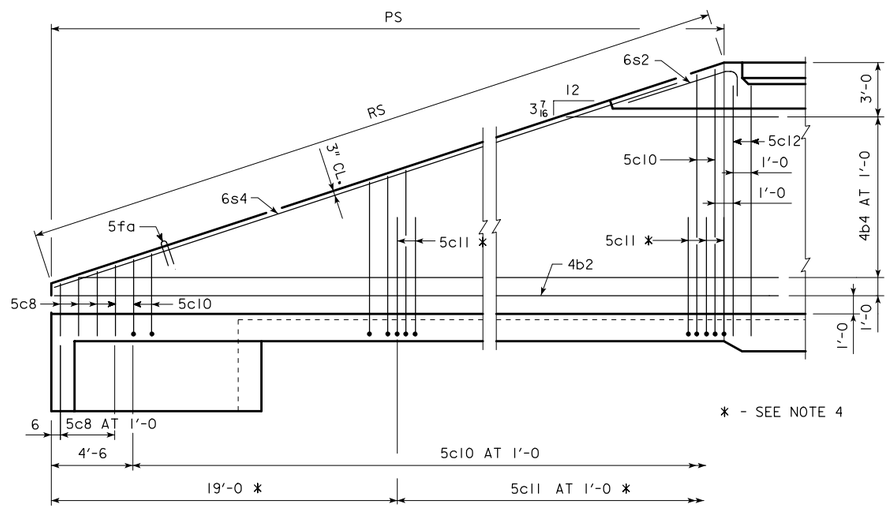

TYPICAL VIEW - BACK FACE REINFORCING SHORT WINGWALL

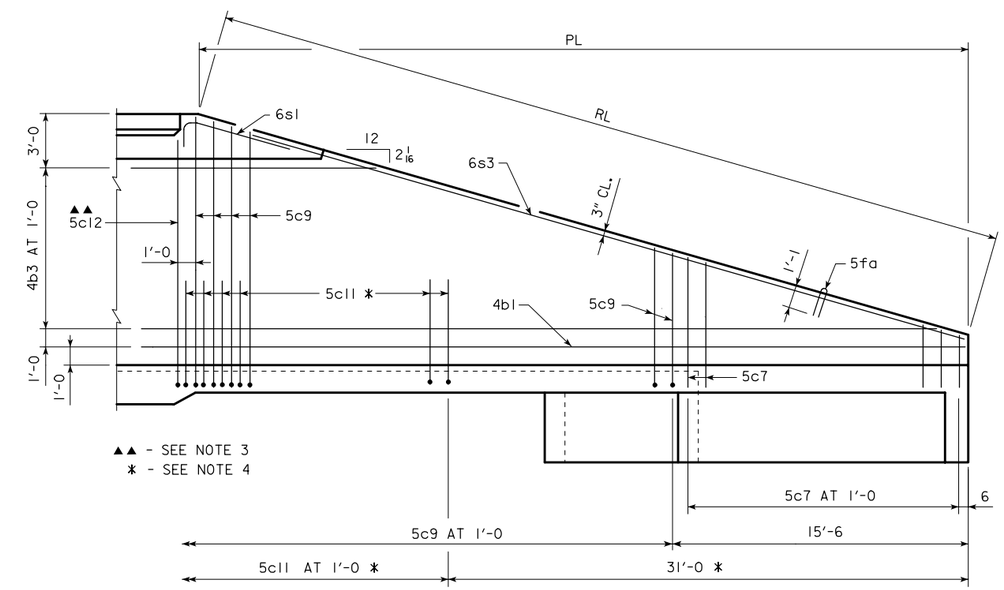

TYPICAL VIEW - BACK FACE REINFORCING LONG WINGWALL

CULVERT HEIGHT (H)	SLOPE Y
6'-0	3 1/2
8'-0	3 11/16
10'-0	3 13/16
12'-0	3 7/8

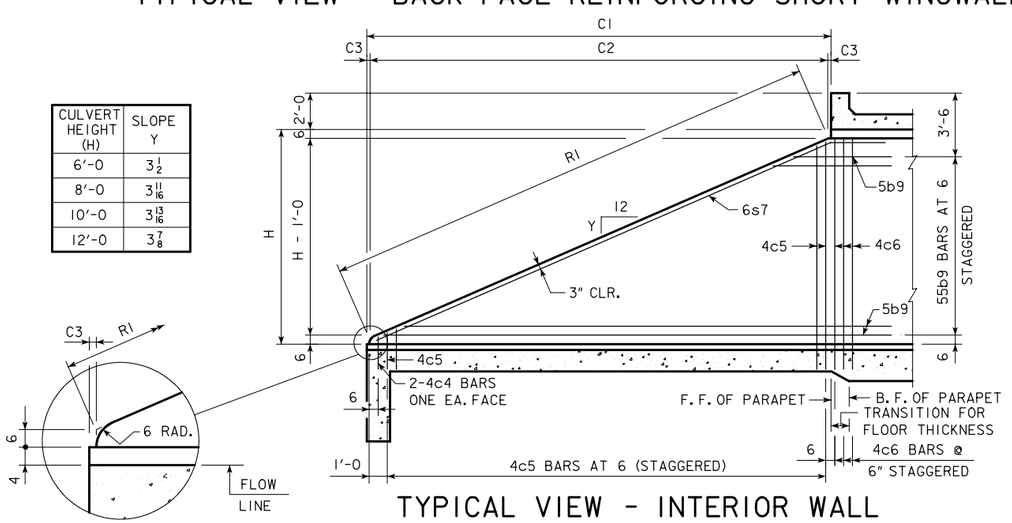

TYPICAL VIEW - INTERIOR WALL

HEADWALL NOTES:

1. BAR SPACINGS AND POSITIONS SHOWN ARE SIMILAR FOR ALL SIZES OF HEADWALLS IN THIS STANDARD.
2. ONE 4c3 BAR, HEADWALL HEIGHTS OF 6'-0, 8'-0, 12'-0 AND TWO 4c3 BARS, HEADWALL HEIGHTS OF 10'-0.
3. ONE 5c12 BAR, HEADWALL HEIGHTS OF 6'-0, 8'-0, 12'-0 AND TWO 5c12 BARS, HEADWALL HEIGHTS OF 10'-0.
4. NOT APPLICABLE TO HEADWALL HEIGHT OF H=6'-0.
5. FOR DIMENSION TABLE SEE SHEET TRH 45-1-01.

LATEST REVISION DATE :

APPROVED BY :

STANDARD DESIGN

FLARED WING HEADWALLS

FOR

TRIPLE REINFORCED CONCRETE BOX CULVERTS

IOWA DEPARTMENT OF TRANSPORTATION - HIGHWAY DIVISION

SEPT., 2001

TRH 45-5-01

TRH 45-5-01 - 09-01 THIS SHEET ISSUED.

BILL OF REINFORCING FOR ONE HEADWALL 45° SKEW CULVERT SPAN x CULVERT HEIGHT

BAR	LOCATION	SHAPE	12' x 12' NO.	12' x 12' LENGTH	12' x 12' WEIGHT	12' x 10' NO.	12' x 10' LENGTH	12' x 10' WEIGHT	12' x 8' NO.	12' x 8' LENGTH	12' x 8' WEIGHT	12' x 6' NO.	12' x 6' LENGTH	12' x 6' WEIGHT	10' x 12' NO.	10' x 12' LENGTH	10' x 12' WEIGHT	10' x 10' NO.	10' x 10' LENGTH	10' x 10' WEIGHT	10' x 8' NO.	10' x 8' LENGTH	10' x 8' WEIGHT	10' x 6' NO.	10' x 6' LENGTH	10' x 6' WEIGHT	BAR
5fa	FENCE ANCHOR (GALV.)		2	3'-1	6	2	3'-1	6	2	3'-1	6	2	3'-1	6	2	3'-1	6	2	3'-1	6	2	3'-1	6	2	3'-1	6	5fa
4b1	WINGWALL, B.F.H. LONG		1	74'-9	51	1	63'-1	43	1	51'-5	36	1	39'-9	27	1	74'-9	51	1	63'-1	43	1	51'-5	36	1	39'-9	27	4b1
4b2	WINGWALL, B.F.H. SHORT		1	46'-0	32	1	39'-0	26	1	32'-0	21	1	25'-0	17	1	46'-0	32	1	39'-0	26	1	32'-0	21	1	25'-0	17	4b2
4b3	WINGWALL, B.F.H. LONG		10 VAR	19'-6: 71'-11	313	8 VAR	19'-6: 60'-3	218	6 VAR	19'-6: 48'-8	139	4 VAR	19'-6: 37'-0	75	10 VAR	19'-6: 71'-11	313	8 VAR	19'-6: 60'-3	218	6 VAR	19'-6: 48'-8	139	4 VAR	19'-6: 37'-0	75	4b3
4b4	WINGWALL, B.F.H. SHORT		10 VAR	12'-10: 44'-4	194	8 VAR	12'-10: 37'-4	134	6 VAR	12'-10: 30'-4	86	4 VAR	12'-10: 23'-4	48	10 VAR	12'-10: 44'-4	194	8 VAR	12'-10: 37'-4	134	6 VAR	12'-10: 30'-4	86	4 VAR	12'-10: 23'-4	48	4b4
5b5	WINGWALL, F.F.H. LONG		1	74'-9	80	1	63'-1	68	1	51'-5	56	1	39'-9	41	1	74'-9	80	1	63'-1	68	1	51'-5	56	1	39'-9	41	5b5
5b6	WINGWALL, F.F.H. SHORT		1	46'-0	50	1	39'-0	41	1	32'-0	33	1	25'-0	26	1	46'-0	50	1	39'-0	41	1	32'-0	33	1	25'-0	26	5b6
5b7	WINGWALL, F.F.H. LONG		11 VAR	13'-8: 71'-11	503	9 VAR	13'-8: 60'-3	355	7 VAR	13'-8: 48'-8	232	5 VAR	13'-8: 37'-0	132	11 VAR	13'-8: 71'-11	503	9 VAR	13'-8: 60'-3	355	7 VAR	13'-8: 48'-8	232	5 VAR	13'-8: 37'-0	132	5b7
5b8	WINGWALL, F.F.H. SHORT		11 VAR	9'-4: 44'-4	312	9 VAR	9'-4: 37'-4	219	7 VAR	9'-4: 30'-4	145	5 VAR	9'-4: 23'-4	85	11 VAR	9'-4: 44'-4	312	9 VAR	9'-4: 37'-4	219	7 VAR	9'-4: 30'-4	145	5 VAR	9'-4: 23'-4	85	5b8
5b9	CENTER WALLS, BOTH F.H.		42 VAR	5'-11: 36'-9	935	34 VAR	6'-0: 31'-3	660	26 VAR	6'-1: 25'-7	429	18 VAR	6'-3: 20'-0	246	42 VAR	5'-11: 36'-9	935	34 VAR	6'-0: 31'-3	660	26 VAR	6'-1: 25'-7	429	18 VAR	6'-3: 20'-0	246	5b9
4c1	WINGWALL, F.F.V. LONG		72 VAR	2'-10: 15'-0	429	60 VAR	2'-10: 12'-11	316	49 VAR	2'-10: 11'-0	226	37 VAR	2'-10: 9'-0	146	72 VAR	2'-9: 14'-11	425	60 VAR	2'-9: 12'-10	312	49 VAR	2'-9: 10'-11	224	37 VAR	2'-9: 8'-11	144	4c1
4c2	WINGWALL, F.F.V. SHORT		43 VAR	2'-10: 14'-10	254	36 VAR	2'-10: 12'-10	188	29 VAR	2'-10: 10'-10	132	22 VAR	2'-10: 8'-10	86	43 VAR	2'-9: 14'-9	251	36 VAR	2'-9: 12'-9	186	29 VAR	2'-9: 10'-9	131	22 VAR	2'-9: 8'-9	85	4c2
4c3	WINGWALL, F.F.V. LONG		1	13'-9	9	2	11'-9	16	1	9'-9	7	1	7'-9	5	1	13'-8	9	2	11'-8	16	1	9'-8	6	1	7'-8	5	4c3
4c3	WINGWALL, F.F.V. SHORT		2	13'-9	18	2	11'-9	16	2	9'-9	13	2	7'-9	10	2	13'-8	18	2	11'-8	16	2	9'-8	13	2	7'-8	10	4c3
4c4	CENTER WALLS, BOTH F.V.		4	1'-9	5	4	1'-9	5	4	1'-9	5	4	1'-8	4	4	1'-8	4	4	1'-8	4	4	1'-8	4	4	1'-7	4	4c4
4c5	CENTER WALLS, BOTH F.V.		132 VAR	1'-10: 12'-5	628	110 VAR	1'-10: 10'-5	450	88 VAR	1'-10: 8'-6	304	66 VAR	1'-10: 6'-6	184	132 VAR	1'-9: 12'-4	621	110 VAR	1'-9: 10'-4	444	88 VAR	1'-9: 8'-5	299	66 VAR	1'-9: 6'-5	180	4c5
4c6	CENTER WALLS, BOTH F.V.		6	12'-7	50	6	10'-7	42	6	8'-7	34	6	6'-7	26	6	12'-6	50	6	10'-6	42	6	8'-6	34	6	6'-6	26	4c6
5c7	WINGWALL, B.F.V. LONG		15 VAR	2'-10: 5'-3	63	15 VAR	2'-10: 5'-3	63	15 VAR	2'-10: 5'-3	63	15 VAR	2'-10: 5'-3	63	15 VAR	2'-9: 5'-2	62	15 VAR	2'-9: 5'-2	62	15 VAR	2'-9: 5'-2	62	15 VAR	2'-9: 5'-2	62	5c7
5c8	WINGWALL, B.F.V. SHORT		4 VAR	2'-10: 3'-8	14	4 VAR	2'-10: 3'-8	14	4 VAR	2'-10: 3'-8	14	4 VAR	2'-10: 3'-8	14	4 VAR	2'-9: 3'-7	13	4 VAR	2'-9: 3'-7	13	4 VAR	2'-9: 3'-7	13	4 VAR	2'-9: 3'-7	13	5c8
5c9	WINGWALL, B.F.V. LONG		57 VAR	9'-5: 19'-0	845	45 VAR	9'-5: 16'-11	618	34 VAR	9'-5: 15'-0	433	22 VAR	9'-5: 13'-0	257	57 VAR	9'-4: 18'-11	840	45 VAR	9'-4: 16'-10	614	34 VAR	9'-4: 14'-11	430	22 VAR	9'-4: 12'-11	255	5c9
5c10	WINGWALL, B.F.V. SHORT		39 VAR	8'-0: 18'-10	546	32 VAR	8'-0: 16'-10	414	25 VAR	8'-0: 14'-10	298	18 VAR	8'-0: 12'-10	196	39 VAR	7'-11: 18'-9	542	32 VAR	7'-11: 16'-9	412	25 VAR	7'-11: 14'-9	296	18 VAR	7'-11: 12'-9	194	5c10
5c11	WINGWALL, B.F.V. LONG		43	10'-6	471	31	10'-6	340	19	10'-6	208	—	—	—	43	10'-6	471	31	10'-6	339	19	10'-6	208	—	—	—	5c11
5c11	WINGWALL, B.F.V. SHORT		26	10'-6	285	19	10'-6	208	12	10'-6	131	—	—	—	26	10'-6	285	19	10'-6	208	12	10'-6	131	—	—	—	5c11
5c12	WINGWALL, B.F.V. LONG		1	17'-8	18	2	15'-8	33	1	13'-8	14	1	11'-8	12	1	17'-7	18	2	15'-7	33	1	13'-7	14	1	11'-7	12	5c12
5c12	WINGWALL, B.F.V. SHORT		2	17'-8	37	2	15'-8	33	2	13'-8	29	2	11'-8	24	2	17'-7	37	2	15'-7	33	2	13'-7	28	2	11'-7	24	5c12
4d1	APRON, LONGIT., BOTTOM		25	38'-0	635	25	32'-4	540	25	26'-9	447	25	21'-1	352	21	38'-0	533	21	32'-4	454	21	26'-9	375	21	21'-1	296	4d1
4d2	APRON, LONGIT., BOTT. LONG		3	67'-3	139	3	55'-8	116	3	44'-0	92	3	32'-6	65	3	67'-3	139	3	55'-8	116	3	44'-0	92	3	32'-6	65	4d2
4d3	APRON, LONGIT. BOTT. SHORT		3	41'-10	88	3	34'-10	70	3	27'-11	56	3	21'-0	42	3	41'-10	88	3	34'-10	70	3	27'-11	56	3	21'-0	42	4d3
6f1	APRON, LONGIT., TOP		37	38'-0	2112	37	32'-4	1797	37	26'-9	1487	37	21'-1	1172	31	38'-0	1769	31	32'-4	1505	31	26'-9	1246	31	21'-1	982	6f1
6f2	APRON, LONGIT., TOP, LONG		15 VAR	6'-6: 34'-10	466	12 VAR	6'-11: 29'-2	325	9 VAR	7'-3: 23'-6	208	7 VAR	5'-7: 17'-10	123	15 VAR	6'-6: 34'-10	466	12 VAR	6'-11: 29'-2	325	9 VAR	7'-3: 23'-6	208	7 VAR	5'-7: 17'-10	123	6f2
6f3	APRON, LONGIT., TOP SHORT		9 VAR	8'-1: 35'-2	292	8 VAR	5'-9: 29'-6	212	6 VAR	6'-10: 23'-10	138	4 VAR	7'-11: 18'-2	78	9 VAR	8'-1: 35'-2	292	8 VAR	5'-9: 29'-6	212	6 VAR	6'-10: 23'-10	138	4 VAR	7'-11: 18'-2	78	6f3
6f4	APRON, LONGIT., TOP, LONG		1	74'-8	115	1	63'-1	98	1	51'-5	80	1	39'-9	60	1	74'-8	115	1	63'-1	98	1	51'-5	80	1	39'-9	60	6f4
6f5	APRON, LONGIT., TOP SHORT		1	45'-11	72	1	39'-0	59	1	32'-0	48	1	25'-0	38	1	45'-11	72	1	39'-0	59	1	32'-0	48	1	25'-0	38	6f5
4i1	PARAPET, VERTICAL		79	6'-8	352	77	6'-8	343	77	6'-8	343	77	6'-8	343	67	6'-8	298	65	6'-8	289	65	6'-8	289	65	6'-8	289	4i1
7j1	PARAPET, HORIZONTAL		4	56'-1	476	4	55'-1	468	4	55'-1	468	4	54'-8	465	4	47'-7	407	4	46'-8	399	4	46'-8	399	4	46'-2	395	7j1
6m1	APRON, TRANS., TOP		23 VAR	48'-9: 44'-8	1706	16 VAR	46'-9: 43'-11	1154	8 VAR	45'-3: 43'-11	568	1	43'-7	69	23 VAR	42'-0: 37'-11	1424	20 VAR	40'-9: 37'-2	1190	12 VAR	39'-3: 37'-2	689	5 VAR	37'-7: 36'-10	279	6m1
6m2	APRON, TRANS., TOP		4 VAR	38'-6: 36'-3	225	11 VAR	37'-9: 30'-3	562	19 VAR	38'-2: 24'-8	897	26 VAR	37'-7: 18'-10	1102	4 VAR	43'-5: 42'-3	273	3 VAR	31'-9: 30'-4	140	11 VAR	32'-2: 24'-8	470	18 VAR	31'-7: 18'-10	682	6m2
6m3	APRON, TRANS., TOP		47 VAR	35'-7: 9'-9	1600	39 VAR	29'-8: 8'-3	1111	31 VAR	24'-0: 7'-1	724	23 VAR	18'-2: 5'-10	415	42 VAR	33'-4: 10'-4	1377	39 VAR	29'-8: 8'-3	1111	31 VAR	24'-0: 7'-2	726	23 VAR	18'-2: 5'-10	415	6m3
6m5	APRON, TRANS., BOTTOM		24 VAR	71'-11: 47'-5	2229	20 VAR	67'-2: 46'-11	1779	16 VAR	62'-11: 46'-11	1372	12 VAR	58'-5: 46'-8	986	24 VAR	63'-5: 38'-11	1916	20 VAR	58'-8: 38'-5	1517	16 VAR	54'-5: 38'-5	1161	12 VAR	49'-11: 38'-2	826	6m5
6p1	CURTAIN, HORIZONTAL		4	53'-8	335	4	53'-2	332	4	53'-2	332	4	52'-11	331	4	45'-2	284	4	44'-9	281	4	44'-8	281	4	44'-5	280	6p1
6p2	CURTAIN, HORIZ. LONG		4	42'-4	267	4	36'-0	216	4	29'-8	178	4	23'-4	140	4	42'-4	267	4	36'-0	216	4	29'-8	178	4	23'-4	140	6p2
6p3	CURTAIN, HORIZ. SHORT		4	15'-9	95	4	13'-9	83	4	11'-8	70	4	9'-8	58	4	15'-10	95	4	13'-9	83	4	11'-8	70	4	9'-8	58	6p3
6s1	WING SLOPE, BOTH F. LONG		2	8'-4	25	2	8'-4	25	2	8'-4	25	2	8'-4	25	2	8'-4	25	2	8'-4	25	2	8'-4	25	2	8'-4	25	6s1
6s2	WING SLOPE, BOTH F. SHORT		2	7'-11	24	2	7'-11	24	2	7'-11	24	2	7'-11	24	2	7'-11	24	2	7'-11	24	2	7'-11	24	2	7'-11	24	6s2
6s3	WING SLOPE, BOTH F. LONG		2	69'-4	214	2	57'-6	179	2	45'-9	143	2	33'-10	102	2	69'-4	214	2	57'-6	179	2	45'-9	143	2	33'-10	102	6s3
6s4	WING SLOPE, BOTH F. SHORT		2	42'-3	133	2	35'-0	105	2	27'-9	83	2	20'-6	62	2	42'-3	133	2	35'-0	105	2	27'-9	83	2	20'-6	62	6s4
6s5	WING SLOPE, F.F. LONG		1	74'-6	115	1	62'-8	97	1	50'-10	79	1	39'-1	59	1	74'-6	115	1	62'-8	97	1	50'-10	79	1	39'-1	59	6s5
6s6	WING SLOPE, F.F. SHORT		1	47'-4	74	1	40'-1	63	1	32'-10	49	1	25'-6	38	1	47'-4	74	1	40'-1	63	1	32'-10	49	1	25'-6	38	6s6
6s7	CENTER WALL, BOTH F.HOR.		4	38'-8	232	4	32'-10	197	4	26'-10	161	4	20'-11	126	4	38'-8	232	4	32'-10	197	4	26'-10	161	4	20'-11	126	6s7
5t1	CURTAIN, VERTICAL		77	7'-11	636	69	7'-5	534	62	6'-11	447	55	6'-5	368	69	7'-11	570	63	7'-5	487	56	6'-11	404	49	6'-5	328	5t1

ESTIMATED QUANTITIES ONE HEADWALL			12' x 12'	12' x 10'	12' x 8'	12' x 6'	10' x 12'	10' x 10'	10' x 8'	10' x 6'
REINFORCING STEEL			18,805 LBS.	15,015 LBS.	11,613 LBS.	8373 LBS.	17,324 LBS.	13,746 LBS.	10,550 LBS.	7529 LBS.
CONC.	PARAPET Δ		5.2	4.9	4.9	4.8	4.5	4.3	4.3	4.2
	WINGWALLS		50.0	30.0	20.2	11.0	50.0	30.0	20.2	11.0
	FOOTING ΔΔ		116.5	92.1	71.4	51.9	100.5	78.8	60.7	43.8
			171.7 CU. YD.	127.0 CU. YD.	96.5 CU. YD.	67.7 CU. YD.	155.0 CU. YD.	113.1 CU. YD.	85.2 CU. YD.	59.0 CU. YD.

BENT BAR DETAILS

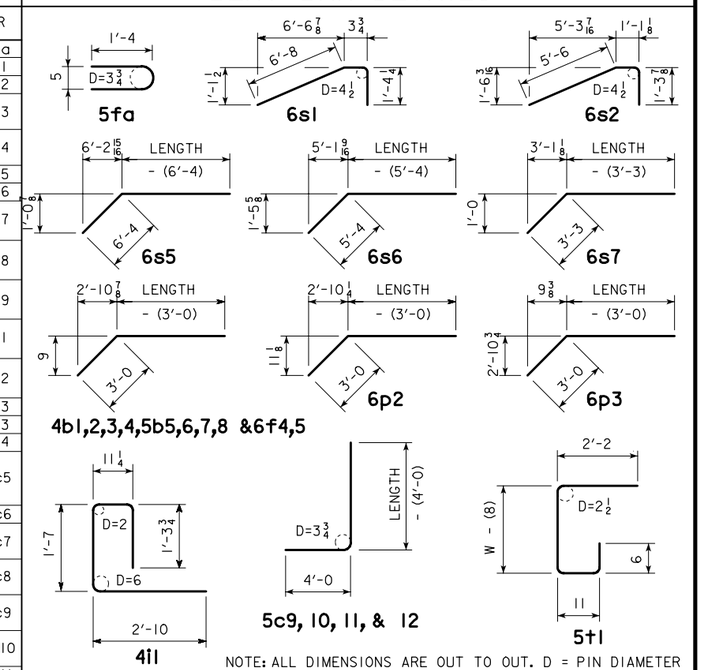

NOTE: ALL DIMENSIONS ARE OUT TO OUT. D = PIN DIAMETER

"SHORT" DENOTES SHORT WINGWALL

"LONG" DENOTES LONG WINGWALL

VARIABLE LENGTH BARS DENOTED BY X:Y

WEIGHT OF BARS OVER 40'-0 LONG INCLUDES AN ALLOWANCE FOR LAP (2'-8 FOR TOP APRON "m" BARS AND 2'-2 ALL OTHER BARS). LENGTHS SHOWN FOR BARS OVER 40'-0 LONG DO NOT INCLUDE LAP (2'-8 FOR TOP APRON "m" BARS AND 2'-2 ALL OTHER).

Δ NOTE: INCLUDES TOP OF WINGWALL QUANTITIES.

ΔΔ ASSUMES APRON AND FLOOR ARE EQUAL THICKNESS, ADJUST CONCRETE QUANTITIES FOR TRANSITION WHERE APRON AND FLOOR THICKNESS ARE NOT EQUAL.

HEADWALL NOTES:

SEE SHEET TRRCB-G1-01 FOR GENERAL INFORMATION, SPECIFICATIONS, AND DESIGN STRESSES.

THIS HEADWALL IS BASED ON A 3:1 SLOPE NORMAL TO CENTERLINE OF ROADWAY.

THE SIDES OF THE FOOTING ARE TO BE FORMED TO INSURE CORRECT LINE AND GRADE.

ALL EXPOSED CORNERS OF 90° OR SHARPER ARE TO BE FILLETED WITH A $\frac{3}{4}$" DRESSED AND BEVELED STRIP.

ALL REINFORCING IS TO BE SECURELY WIRED IN PLACE BEFORE THE CONCRETE IS POURED. ALL SLAB AND FLOOR REINFORCING STEEL IS TO BE SUPPORTED BY BAR CHAIRS AT INTERVALS OF NOT MORE THAN 3'-0 IN EITHER DIRECTION AS OUTLINED IN THE STANDARD SPECIFICATIONS.

CLEAR DISTANCE FROM FACE OF CONCRETE TO NEAR REINFORCING BAR IS TO BE 2" UNLESS OTHERWISE NOTED OR SHOWN.

CONCRETE QUANTITIES ARE ESTIMATED FROM BACK OF PARAPET.

HORIZONTAL TAILS OF BARS "b" & "s" ESTIMATED TO EXTEND 2'-0 BEYOND BACK OF PARAPET (INTO END OF BARREL). LONGITUDINAL BARS "d", "f1", "f4", AND "f5" ESTIMATED TO PROJECT INTO END SECTION OF BARREL A MINIMUM OF 2'-0 BEYOND BACK OF PARAPET.

THE "LENGTH" COLUMN REFLECTS TOTAL NUMBER OF FEET NECESSARY TO MEET THESE REQUIREMENTS.

LATEST REVISION DATE : 02-10

APPROVED BY :

STANDARD DESIGN

FLARED WING HEADWALLS

FOR

TRIPLE REINFORCED CONCRETE BOX CULVERTS

IOWA DEPARTMENT OF TRANSPORTATION - HIGHWAY DIVISION

SEPT., 2001

TRH 45-6-01

REVISED 02-10 - THE 6s7 VERTICAL DIMENSION FOR BENDING THE 3'-3 LEG WAS CHANGED.
TRH 45-6-01 - 09-01 THIS SHEET ISSUED.

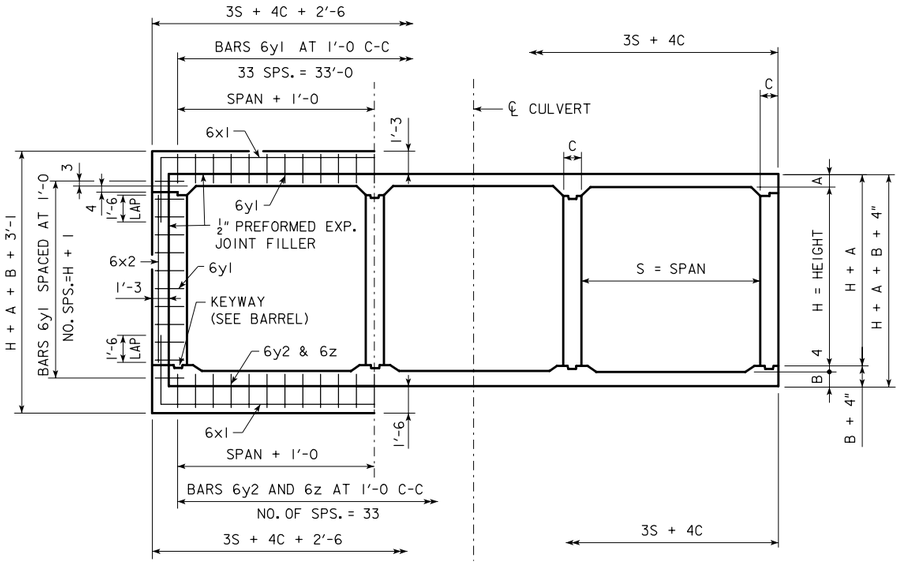

JOINT DETAIL
SECTION THRU BARREL

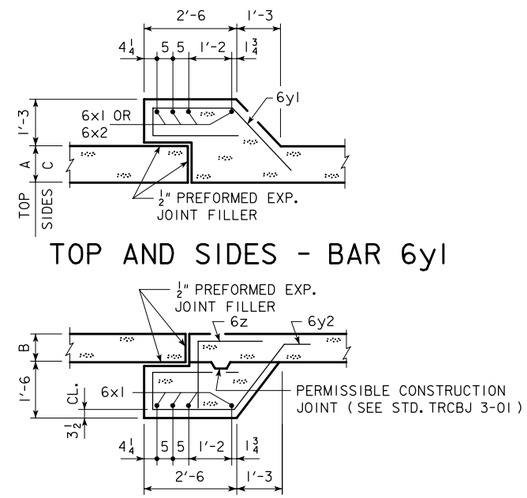

TOP AND SIDES - BAR 6y1

BOTTOM BARS - 6y2 & 6z

ESTIMATE OF QUANTITIES - ONE JOINT - 10' SPAN

BILL OF REINFORCING STEEL			10' x 6'			10' x 8'			10' x 10'			10' x 12'		
BAR	LOCATION	SHAPE	NO.	LENGTH	WEIGHT	NO.	LENGTH	WEIGHT	NO.	LENGTH	WEIGHT	NO.	LENGTH	WEIGHT
6x1	SLAB AND FLOOR		8	44'-3	532	8	44'-3	532	8	44'-7	536	8	45'-3	544
6x2	WALLS		8	5'-4	64	8	7'-4	88	8	9'-4	112	8	11'-4	136
6y1	TOP AND SIDES		50	8'-0	601	54	8'-0	649	58	8'-1	704	62	8'-2	761
6y2	BOTTOM AND FLOOR		34	9'-2	468	34	9'-2	468	34	9'-2	468	34	9'-2	468
6z	BOTTOM AND FLOOR		34	3'-10	196	34	3'-10	196	34	3'-10	196	34	3'-10	196
TOTAL WEIGHT (LBS.)					1861			1933			2016			2105
TOTAL CONCRETE - CU. YD.			13.686 CU. YD.			14.264 CU. YD.			14.950 CU. YD.			15.729 CU. YD.		

BENT BAR DETAILS

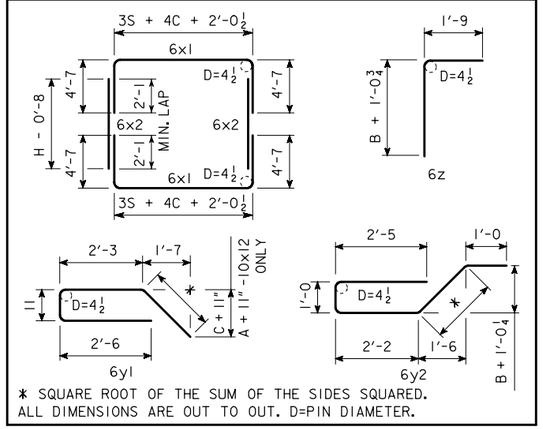

CONCRETE PLACEMENT

BARREL SIZE	BARREL DIMEN.			BELL JOINT QUANTITIES (CU. YDS.)		
	A	B	C	FOOTING	WALLS	SLAB
10' x 6'	10	12	9	6.597	1.640	5.449
10' x 8'	10	12	9	6.597	2.218	5.449
10' x 10'	10	12	10	6.655	2.797	5.498
10' x 12'	9½	12	12	6.771	3.376	5.582

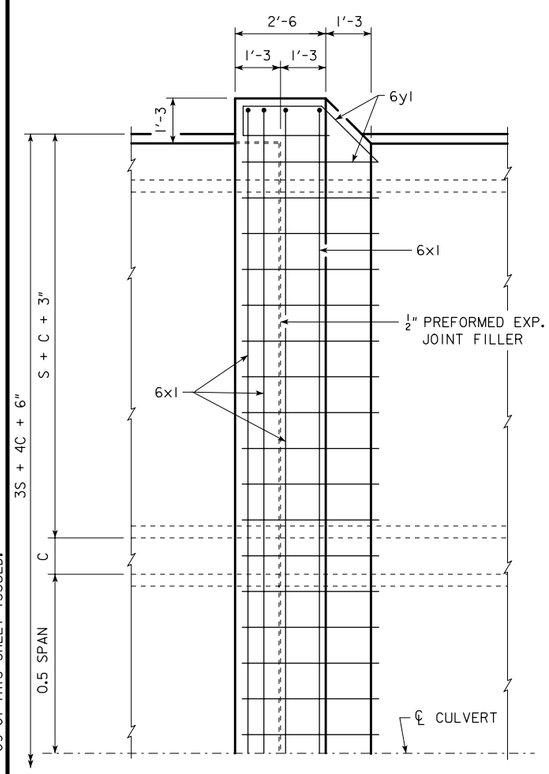

PLAN VIEW - SLAB

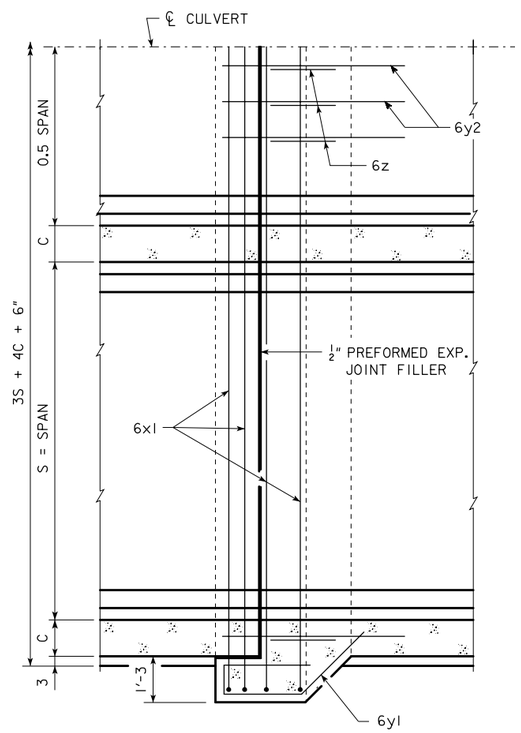

PLAN VIEW - FLOOR

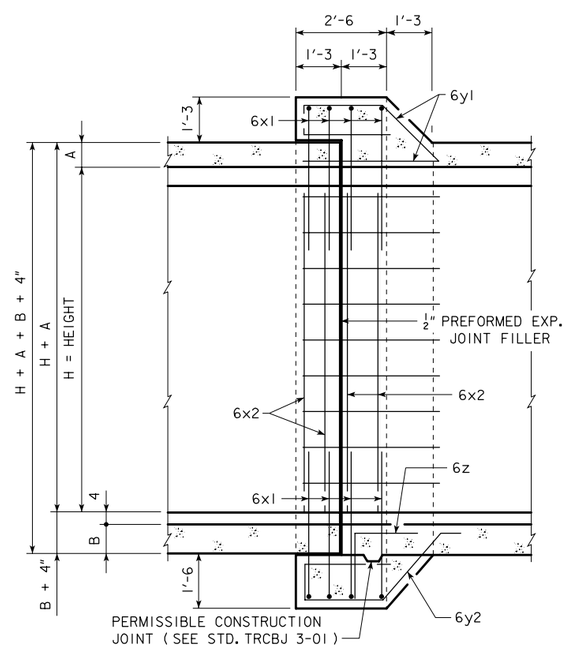

LONGITUDINAL SECTION

BELL JOINT NOTES:

1. DIMENSIONS AND QUANTITIES SHOWN ARE BASED ON SLAB, FLOOR, AND WALL THICKNESSES (A, B, AND C, RESPECTIVELY). VALUES FOR THESE DIMENSIONS, UNDER VARYING FILL CONDITIONS, CAN BE FOUND ON THE TRRCB CULVERT BARREL DETAIL SHEETS.
2. CHANGE LENGTHS OF BARS 6x1, 6z, AND ADJUST REINFORCING STEEL AND CONCRETE QUANTITIES ACCORDINGLY FOR SLAB, WALL AND FLOOR THICKNESSES OTHER THAN SHOWN.
3. ALL BAR LENGTHS ARE ESTIMATED WITH A 2" CLEARANCE FROM CONCRETE EDGE TO OUTSIDE OF BAR, EXCEPT AS NOTED.
4. MATERIAL AND CONSTRUCTION TO BE IN ACCORDANCE WITH THE CURRENT STANDARD SPECIFICATIONS OF I.D.O.T.
5. SEE SHEET TRRCB-G1-01 FOR GENERAL INFORMATION, SPECIFICATIONS AND DESIGN STRESSES.
6. BARS 6x1 MAY BE FURNISHED IN TWO EQUAL LENGTHS ADDING 2'-0 TO THE OVERALL LENGTH TO OBTAIN A 2'-0 MIN. LAP. THE ABOVE IS TO BE PERFORMED AT NO ADDITIONAL COST TO THE CONTRACTING AUTHORITY.
7. BARREL FLOOR BARS m1 ARE TO BE SHORTENED 6" AT BELL JOINTS.

LATEST REVISION DATE : 04-07

APPROVED BY :

STANDARD DESIGN

CULVERT BELL JOINTS - 10' SPANS

FOR

TRIPLE REINFORCED CONCRETE BOX CULVERTS

IOWA DEPARTMENT OF TRANSPORTATION - HIGHWAY DIVISION

SEPT., 2001

TRCBJ 1-01

REVISED 04-07 - THE BAR LENGTHS OF 6x1 AND 6x2 BARS CHANGED. ADDED NOTE 7 TO BELL JOINTS NOTES.
TRCBJ 1-01 - 09-01 THIS SHEET ISSUED.

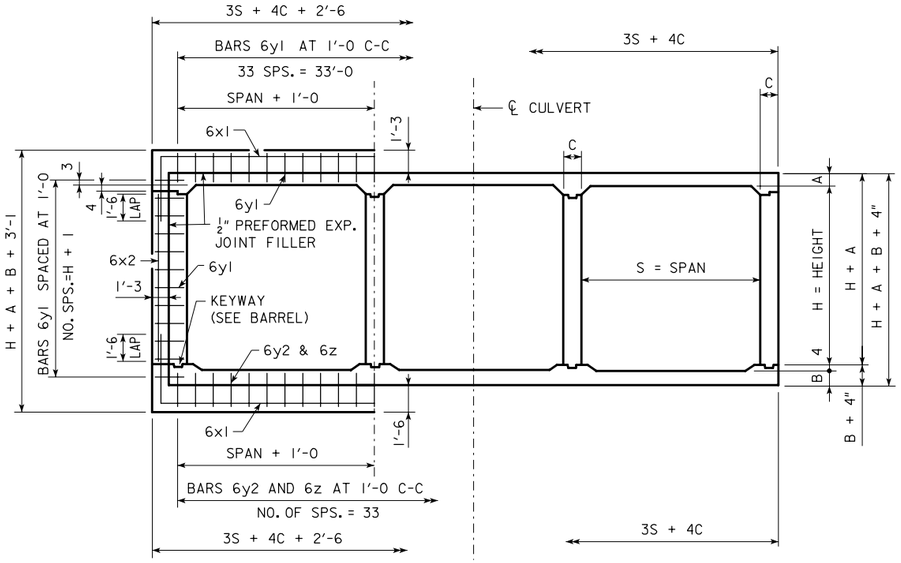

JOINT DETAIL
SECTION THRU BARREL

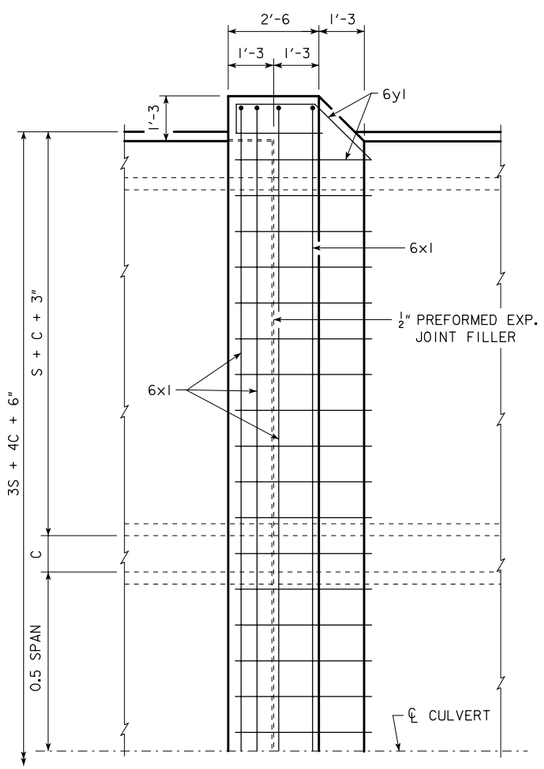

PLAN VIEW - SLAB

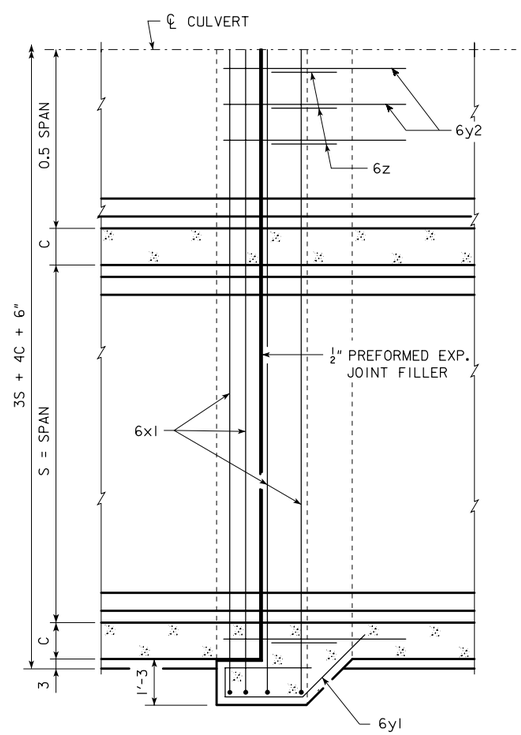

PLAN VIEW - FLOOR

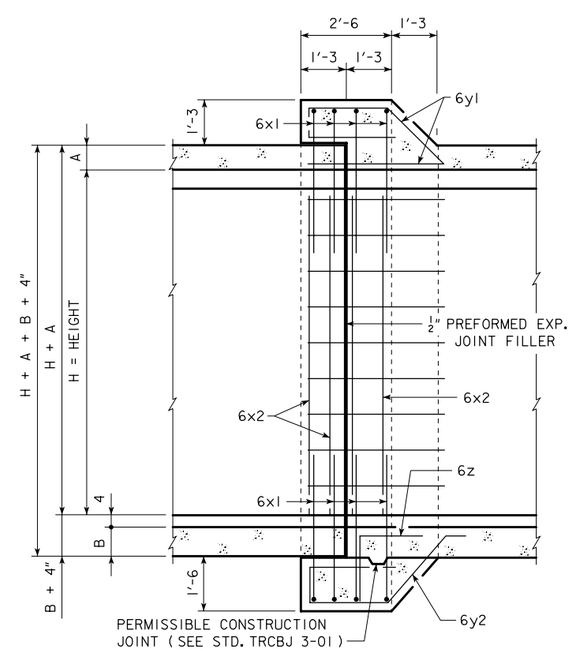

LONGITUDINAL SECTION

ESTIMATE OF QUANTITIES - ONE JOINT - 12' SPAN

BILL OF REINFORCING STEEL			12' x 6'			12' x 8'			12' x 10'			12' x 12'		
MARK	LOCATION	SHAPE	NO.	LENGTH	WEIGHT	NO.	LENGTH	WEIGHT	NO.	LENGTH	WEIGHT	NO.	LENGTH	WEIGHT
6x1	SLAB AND FLOOR		8	50'-7	608	8	50'-7	608	8	50'-11	612	8	51'-7	620
6x2	WALLS		8	5'-4	64	8	7'-4	88	8	9'-4	112	8	11'-4	136
6y1	TOP AND SIDES		56	8'-0	673	60	8'-0	721	64	8'-1	777	68	8'-2	834
6y2	BOTTOM AND FLOOR		40	9'-3	556	40	9'-3	556	40	9'-3	556	40	9'-3	556
6z	BOTTOM AND FLOOR		40	4'-0	240	40	4'-0	240	40	4'-0	240	40	4'-0	240
TOTAL WEIGHT (LBS.)					2141			2213			2297			2386
TOTAL CONCRETE - CU. YD.			15.676 CU. YD.			16.269 CU. YD.			16.954 CU. YD.			17.744 CU. YD.		

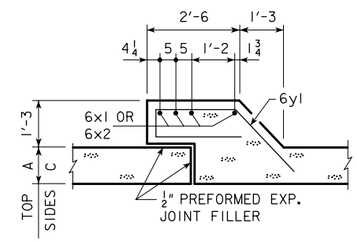

TOP AND SIDES - BAR 6y1

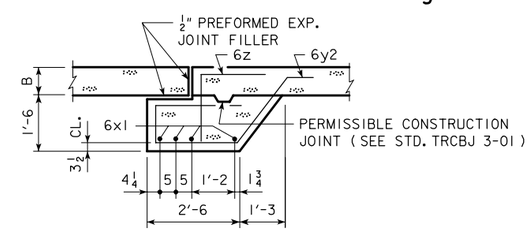

BOTTOM BARS - 6y2 & 6z

BENT BAR DETAILS

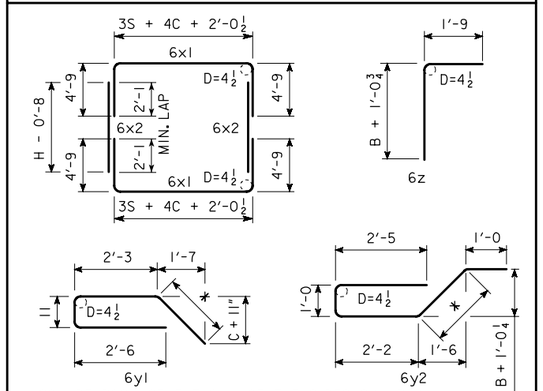

CONCRETE PLACEMENT

BARREL SIZE	BARREL DIMEN.			BELL JOINT QUANTITIES (CU. YDS.)		
	A	B	C	FOOTING	WALLS	SLAB
12' x 6'	11½	13½	9	7.682	1.640	6.354
12' x 8'	11½	14	9	7.697	2.218	6.354
12' x 10'	11½	14	10	7.755	2.797	6.402
12' x 12'	11½	14	12	7.870	3.376	6.498

BELL JOINT NOTES:

1. DIMENSIONS AND QUANTITIES SHOWN ARE BASED ON SLAB, FLOOR, AND WALL THICKNESSES (A, B, AND C, RESPECTIVELY). VALUES FOR THESE DIMENSIONS, UNDER VARYING FILL CONDITIONS, CAN BE FOUND ON THE TRRCB CULVERT BARREL DETAIL SHEETS.
2. CHANGE LENGTHS OF BARS 6x1, 6z, AND ADJUST REINFORCING STEEL AND CONCRETE QUANTITIES ACCORDINGLY FOR SLAB, WALL AND FLOOR THICKNESSES OTHER THAN SHOWN.
3. ALL BAR LENGTHS ARE ESTIMATED WITH A 2" CLEARANCE FROM CONCRETE EDGE TO OUTSIDE OF BAR, EXCEPT AS NOTED.
4. MATERIAL AND CONSTRUCTION TO BE IN ACCORDANCE WITH THE CURRENT STANDARD SPECIFICATIONS OF I.D.O.T.
5. SEE SHEET TRRCB-G1-01 FOR GENERAL INFORMATION, SPECIFICATIONS AND DESIGN STRESSES.
6. BARS 6x1 MAY BE FURNISHED IN TWO EQUAL LENGTHS ADDING 2'-0 TO THE OVERALL LENGTH TO OBTAIN A 2'-0 MIN. LAP. THE ABOVE IS TO BE PERFORMED AT NO ADDITIONAL COST TO THE CONTRACTING AUTHORITY.
7. BARREL FLOOR BARS m1 ARE TO BE SHORTENED 6" AT BELL JOINTS.

LATEST REVISION DATE : 04-07

APPROVED BY :

STANDARD DESIGN

CULVERT BELL JOINTS - 12' SPANS

FOR

TRIPLE REINFORCED CONCRETE BOX CULVERTS

IOWA DEPARTMENT OF TRANSPORTATION - HIGHWAY DIVISION

SEPT., 2001

TRCBJ 2-01

REVISED 04-07 - THE BAR LENGTHS OF 6x1 AND 6x2 BARS CHANGED. ADDED NOTE 7 TO BELL JOINTS NOTES.
TRCBJ 2-01 - 09-01 THIS SHEET ISSUED.

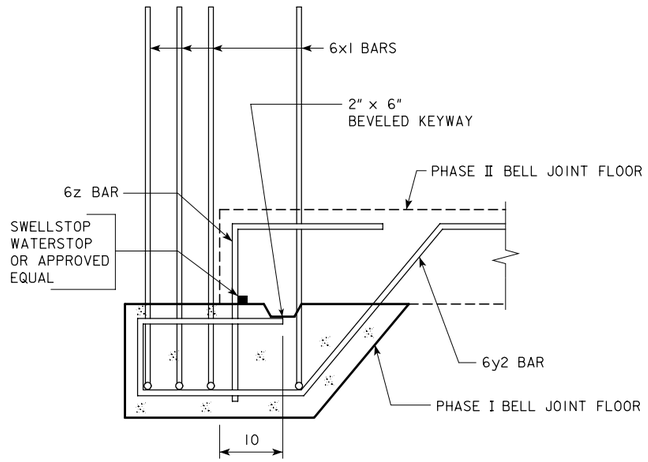

SECTION A-A

BELL JOINT AT FLOOR

COST FOR WATERSTOP CONSIDERED INCIDENTAL TO THE PROJECT.

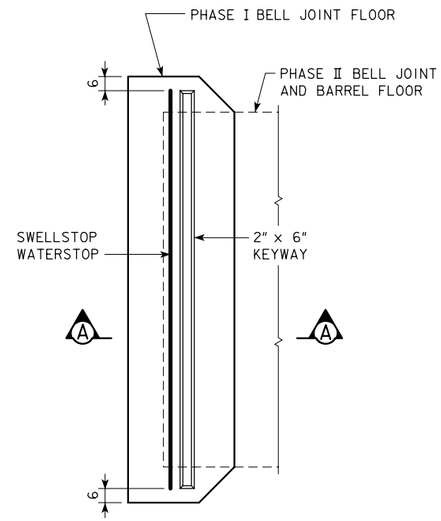

PLAN VIEW - PHASE I

(SHOWING PHASE I OF FLOOR BELL JOINT CONSTRUCTION)

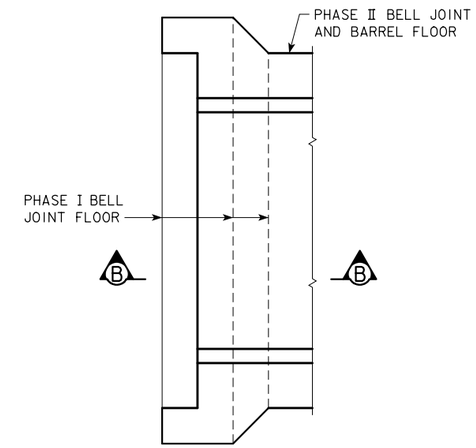

PLAN VIEW - PHASE II

(SHOWING PHASE II OF FLOOR BELL JOINT
AND BARREL FLOOR CONSTRUCTION)

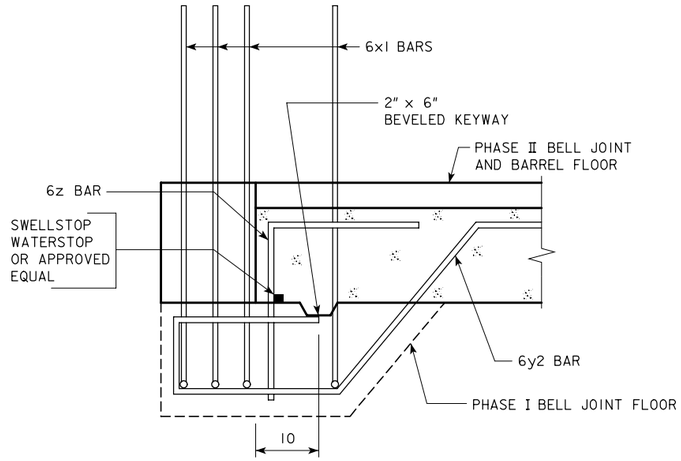

SECTION B-B

BELL JOINT AT FLOOR

COST FOR WATERSTOP CONSIDERED INCIDENTAL TO THE PROJECT.

NOTES:

THE DETAILS SHOWN ON THIS SHEET ARE AN OPTION FOR THE CONTRACTOR TO CONSTRUCT THE FLOOR OF THE BELL JOINT WITH A PERMISSIBLE CONSTRUCTION JOINT AS SHOWN.

REINFORCING STEEL WILL BE PLACED PRIOR TO PLACING THE PHASE I CONCRETE.

THE COST OF THE WATERSTOP IS CONSIDERED INCIDENTAL TO THE PROJECT.

A 2" x 6" BEVELED KEYWAY WILL BE FORMED TO THE DISTANCE SHOWN AND LOCATION NOTED BEFORE PLACING THE CONCRETE.

FOR DETAILS AND DIMENSIONS OF THE BELL JOINT REFER TO THE BELL JOINT STANDARD SHEETS.

LATEST REVISION DATE :

APPROVED BY :

STANDARD DESIGN

PERMISSIBLE CULVERT BELL JOINT

FOR

TRIPLE REINFORCED CONCRETE BOX CULVERTS

IOWA DEPARTMENT OF TRANSPORTATION - HIGHWAY DIVISION

SEPT., 2001

TRCBJ 3-01

TRCBJ 2-01 - 09-01 THIS SHEET ISSUED.