30° SKEW

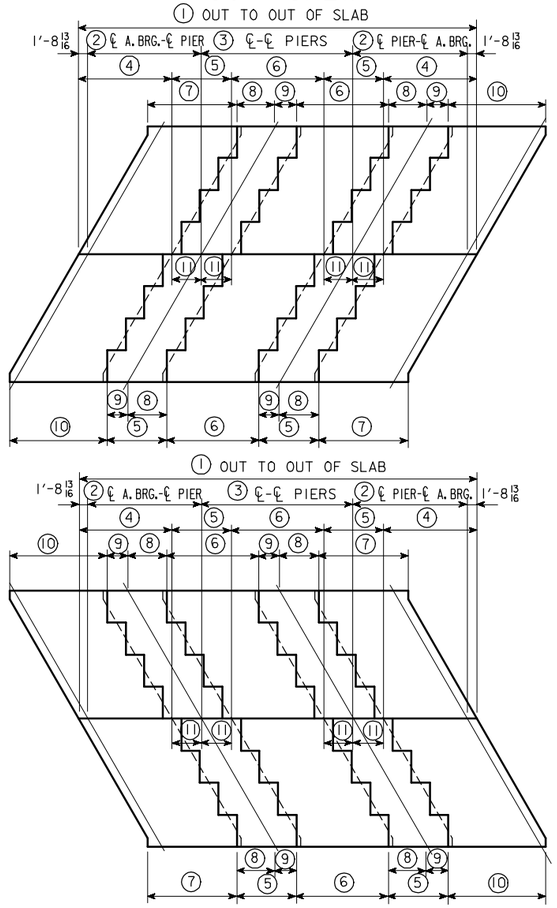

15° SKEW

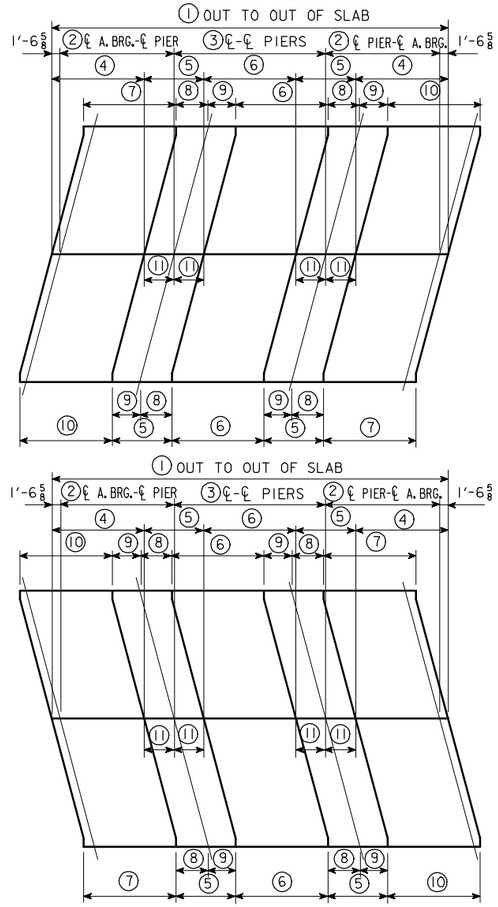

0° SKEW

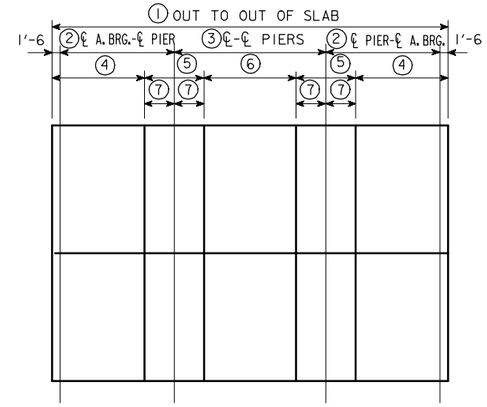

INDEX OF STANDARD SHEETS AVAILABLE

SHEET NO.	SHEET DESCRIPTION
4421	SUBSTRUCTURE DETAILS - 0° SKEW ABUTMENT & PIER PLANS, SUBSTRUCTURE NOTES
4422	SUBSTRUCTURE DETAILS - 15° SKEW R. A. ABUTMENT & PIER PLANS, SUBSTRUCTURE NOTES
4423	SUBSTRUCTURE DETAILS - 15° SKEW L. A. ABUTMENT & PIER PLANS, SUBSTRUCTURE NOTES
4424	SUBSTRUCTURE DETAILS - 30° SKEW R. A. ABUTMENT & PIER PLANS, SUBSTRUCTURE NOTES
4425	SUBSTRUCTURE DETAILS - 30° SKEW L. A. ABUTMENT & PIER PLANS, SUBSTRUCTURE NOTES
4426	LONGITUDINAL SECTION - ALL BRIDGES WING DETAILS, ABUT. REINF. BAR LIST & SUPERSTR. NOTES
4427	BARRIER RAIL DETAILS - ALL BRIDGES
4428	SUPERSTRUCTURE DETAILS - 70'-0 BRIDGE CROSS SECTION, REINF. LAYOUT & BAR LIST
4429	SUPERSTRUCTURE DETAILS - 80'-0 BRIDGE CROSS SECTION, REINF. LAYOUT & BAR LIST
4430	SUPERSTRUCTURE DETAILS - 90'-0 BRIDGE CROSS SECTION, REINF. LAYOUT & BAR LIST
4431	SUPERSTRUCTURE DETAILS - 100'-0 BRIDGE CROSS SECTION, REINF. LAYOUT & BAR LIST
4432	SUPERSTRUCTURE DETAILS - 110'-0 BRIDGE CROSS SECTION, REINF. LAYOUT & BAR LIST
4433	SUPERSTRUCTURE DETAILS - 120'-0 BRIDGE CROSS SECTION, REINF. LAYOUT & BAR LIST
4434	SUPERSTRUCTURE DETAILS - 130'-0 BRIDGE CROSS SECTION, REINF. LAYOUT & BAR LIST
4435	CONCRETE PLACEMENT DIAGRAM - 0° SKEW TRANSVERSE REINFORCING STEEL LAYOUT
4436	CONCRETE PLACEMENT DIAGRAM - 15° SKEW R.A. TRANSVERSE REINFORCING STEEL LAYOUT
4437	CONCRETE PLACEMENT DIAGRAM - 15° SKEW L. A. TRANSVERSE REINFORCING STEEL LAYOUT
4438	CONCRETE PLACEMENT DIAGRAM - 30° SKEW R. A. TRANSVERSE REINFORCING STEEL LAYOUT
4439	CONCRETE PLACEMENT DIAGRAM - 30° SKEW L. A. TRANSVERSE REINFORCING STEEL LAYOUT

DIMENSIONS OF SLAB SECTIONS

BR. \ PT.	①	②	③	④	⑤	⑥	⑦	⑧	⑨	⑩	⑪
70'-0	73'-5 5/8	21'-0	28'-0	17'-2 13/16	11'-0	17'-0	16'-5 5/8	7'-2 3/16	3'-9 13/16	18'-0	5'-6
80'-0	83'-5 5/8	24'-6	31'-0	20'-2 13/16	12'-0	19'-0	19'-5 5/8	7'-8 3/16	4'-3 13/16	21'-0	6'-0
90'-0	93'-5 5/8	27'-6	35'-0	22'-2 13/16	14'-0	21'-0	21'-5 5/8	8'-8 3/16	5'-3 13/16	23'-0	7'-0
100'-0	103'-5 5/8	30'-6	39'-0	24'-2 13/16	16'-0	23'-0	23'-5 5/8	9'-8 3/16	6'-3 13/16	25'-0	8'-0
110'-0	113'-5 5/8	33'-6	43'-0	26'-2 13/16	18'-0	25'-0	25'-5 5/8	10'-8 3/16	7'-3 13/16	27'-0	9'-0
120'-0	123'-5 5/8	36'-6	47'-0	28'-2 13/16	20'-0	27'-0	27'-5 5/8	11'-8 3/16	8'-3 13/16	29'-0	10'-0
130'-0	133'-5 5/8	39'-6	51'-0	30'-2 13/16	22'-0	29'-0	29'-5 5/8	12'-8 3/16	9'-3 13/16	31'-0	11'-0

DIMENSIONS OF SLAB SECTIONS

BR. \ PT.	①	②	③	④	⑤	⑥	⑦	⑧	⑨	⑩	⑪
70'-0	73'-1 1/4	21'-0	28'-0	17'-0 5/8	11'-0	17'-0	17'-0 5/8	5'-11 1/8	5'-0 7/8	17'-0 5/8	5'-6
80'-0	83'-1 1/4	24'-6	31'-0	20'-0 5/8	12'-0	19'-0	20'-0 5/8	6'-5 1/8	5'-6 7/8	20'-0 5/8	6'-0
90'-0	93'-1 1/4	27'-6	35'-0	22'-0 5/8	14'-0	21'-0	22'-0 5/8	7'-5 1/8	6'-6 7/8	22'-0 5/8	7'-0
100'-0	103'-1 1/4	30'-6	39'-0	24'-0 5/8	16'-0	23'-0	24'-0 5/8	8'-5 1/8	7'-6 7/8	24'-0 5/8	8'-0
110'-0	113'-1 1/4	33'-6	43'-0	26'-0 5/8	18'-0	25'-0	26'-0 5/8	9'-5 1/8	8'-6 7/8	26'-0 5/8	9'-0
120'-0	123'-1 1/4	36'-6	47'-0	28'-0 5/8	20'-0	27'-0	28'-0 5/8	10'-5 1/8	9'-6 7/8	28'-0 5/8	10'-0
130'-0	133'-1 1/4	39'-6	51'-0	30'-0 5/8	22'-0	29'-0	30'-0 5/8	11'-5 1/8	10'-6 7/8	30'-0 5/8	11'-0

DIMENSIONS OF SLAB SECTIONS

BR. \ PT.	①	②	③	④	⑤	⑥	⑦
70'-0	73'-0	21'-0	28'-0	17'-0	11'-0	17'-0	5'-6
80'-0	83'-0	24'-6	31'-0	20'-0	12'-0	19'-0	6'-0
90'-0	93'-0	27'-6	35'-0	22'-0	14'-0	21'-0	7'-0
100'-0	103'-0	30'-6	39'-0	24'-0	16'-0	23'-0	8'-0
110'-0	113'-0	33'-6	43'-0	26'-0	18'-0	25'-0	9'-0
120'-0	123'-0	36'-6	47'-0	28'-0	20'-0	27'-0	10'-0
130'-0	133'-0	39'-6	51'-0	30'-0	22'-0	29'-0	11'-0

ABUT. & PIER REACTIONS FOR SLAB BRIDGES

BRIDGE	ABUTMENT REACTION (KIPS)			PIER REACTION (KIPS)			
	[1] DEAD LOAD	LIVE LOAD	TOTAL	[2] DEAD LOAD	LIVE LOAD	IMPACT	TOTAL
70'-0	221.6	107.7	329.3	305.0	155.1	46.5	506.6
80'-0	240.2	115.6	355.8	354.5	161.9	48.6	565.0
90'-0	256.7	121.1	377.8	417.0	168.2	50.5	635.7
100'-0	275.9	126.8	402.7	489.7	172.4	51.7	713.8
110'-0	295.1	131.9	427.0	562.1	175.9	52.8	790.8
120'-0	319.0	136.4	455.4	652.7	178.4	53.5	884.6
130'-0	342.9	140.3	483.2	742.8	180.5	53.1	976.4

DESIGN CRITERIA:

THE 3-SPAN CONTINUOUS CONCRETE SLAB STANDARDS FOR 44' ROADWAY ARE DESIGNED IN ACCORDANCE WITH THE AASHTO STANDARD SPECIFICATIONS FOR HIGHWAY BRIDGES, SERIES OF 1989, USING THE SERVICE LOAD DESIGN METHOD (ALLOWABLE STRESS DESIGN).

CONCRETE f'c = 3500 psi

REINFORCING STEEL fs = 24,000 psi (GRADE 60)

n=9 FOR TENSION STEEL

2n=18 FOR COMPRESSION STEEL

HS20-44 LOADING OR AN ALTERNATE MILITARY LOADING OF TWO AXLES FOUR FEET APART (24,000 LBS. EACH AXLE) PLUS 20 LBS. PER SQ. FT. FOR FUTURE WEARING SURFACE.

END SPAN LENGTH IS USED FOR "S" IN LIVE LOAD DISTRIBUTION FORMULA (E=4+0.06S).

THE TOP 1/2" OF THE SLAB IS CONSIDERED TO BE AN INTEGRAL WEARING SURFACE. THE DEAD LOAD OF THE BARRIER RAIL IS SPREAD OVER THE ENTIRE SLAB.

THE DESIGN OF THE EDGE BEAM INCLUDES 25% OF THE RAIL WEIGHT TO BE CARRIED BY THE EDGE BEAM.

SLAB MOMENTS DUE TO PASSIVE EARTH PRESSURE ON THE ABUTMENTS ARE CONSIDERED IN GROUP IV LOADING @ 125%.

IF ROCK IS ENCOUNTERED LESS THAN 12' BELOW BOTTOM OF ABUTMENT FOOTING, SPECIAL ANALYSIS MAY BE REQUIRED.

THESE STANDARDS ARE NOT DESIGNED SO THAT ADDITIONAL INTERIOR SPANS MAY BE ADDED WITHOUT CAUSING SOME OVERSTRESSES.

[1] INCLUDES WEIGHT OF ABUTMENT FOOTINGS, BARRIER RAIL, FUTURE WEARING SURFACE, AND WINGS, AND IS BASED ON 30° SKEW.

[2] INCLUDES WEIGHT OF PIER CAP AND IS BASED ON 30° SKEW.

DATA SHEET FOR 44'-0 ROADWAY SLAB BRIDGES

IOWA DEPARTMENT OF TRANSPORTATION - HIGHWAY DIVISION

REVISED: 05-01-91, EPOXY BAR DEVELOPMENT LENGTHS AND SPLICE LENGTHS CHANGED, DEVICE: ZHA1:E200,5] ARCH. TAPE NO. 000016 DATE 05-28-91
ENGLISHCCSBRIDGES.DGN 4420 - 08-12-88

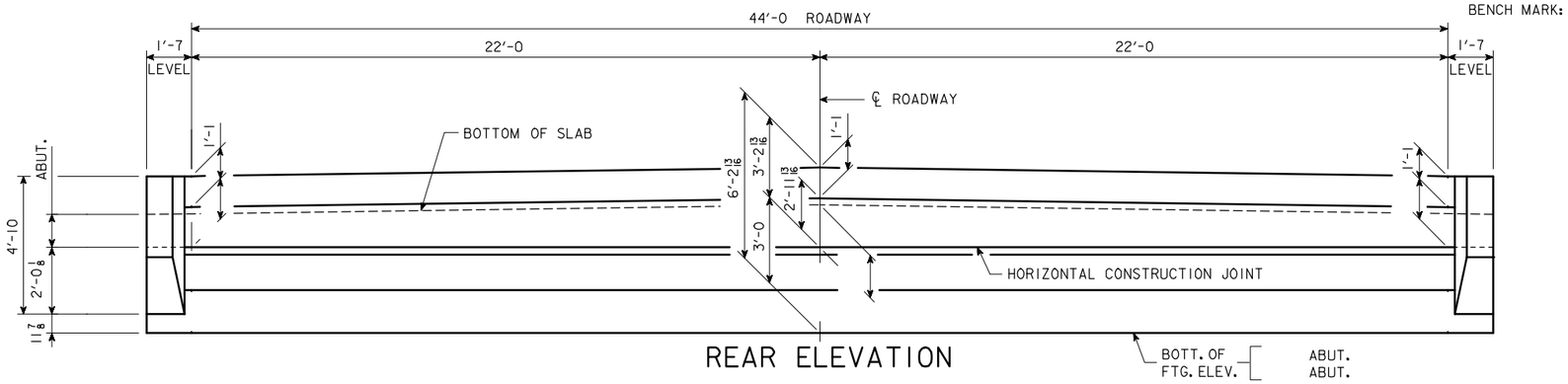

REAR ELEVATION

SUBSTRUCTURE NOTES:

MINIMUM CLEAR DISTANCE FROM FACE OF CONCRETE TO NEAR REINFORCING BAR IS TO BE 2" UNLESS OTHERWISE NOTED OR SHOWN.

THE TRANSVERSE REBARS ARE DETAILED WITH A SPLICE LAP. AT THE CONTRACTOR'S OPTION, THIS LAP MAY BE ELIMINATED BY FURNISHING FULL LENGTH BARS WITH NO REDUCTION IN PAY WEIGHT FOR SAME.

THE DESIGN BEARING FOR THE ABUTMENT PILES IS ?? TONS.

THE DESIGN BEARING FOR THE PIER PILES IS ?? TONS.

NOTE: BARRIER RAIL NOT SHOWN IN DETAILS.

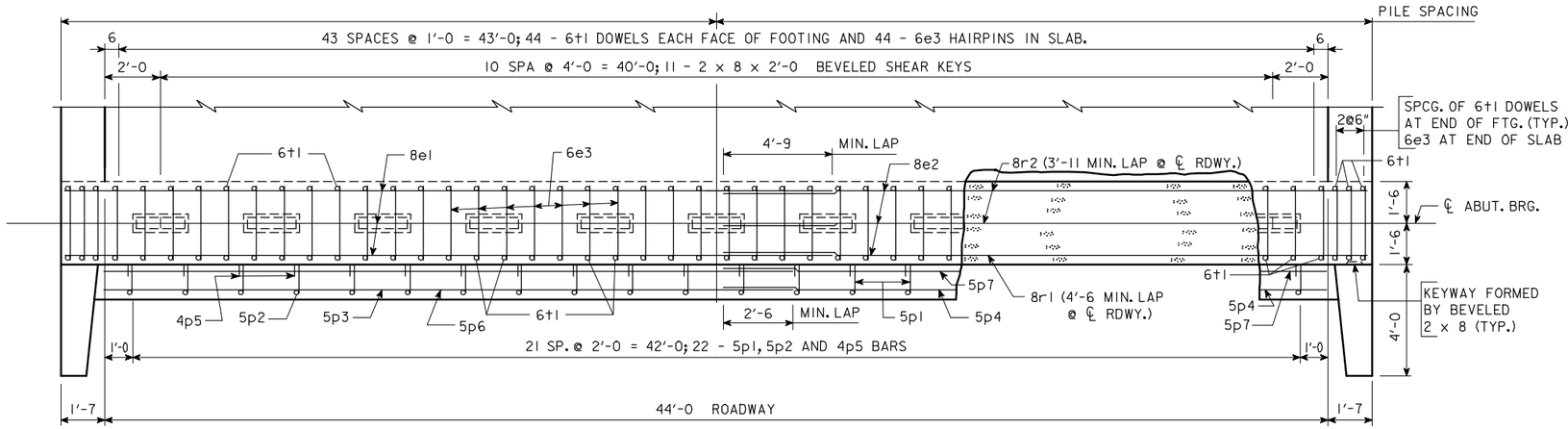

PLAN AT ABUTMENT

NOTE: WING REINFORCING AND RAIL NOT SHOWN.

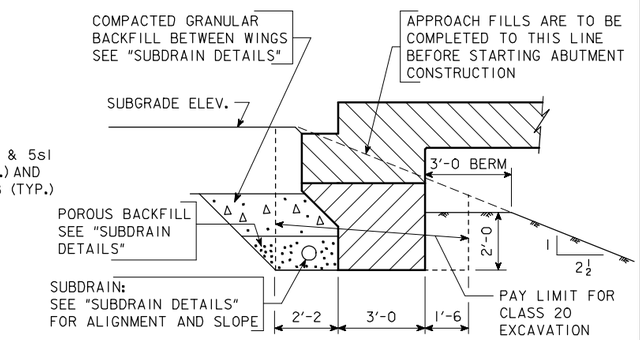

ABUTMENT EXCAVATION DETAILS

SECTION NORMAL TO ℄ ABUT. BRG.

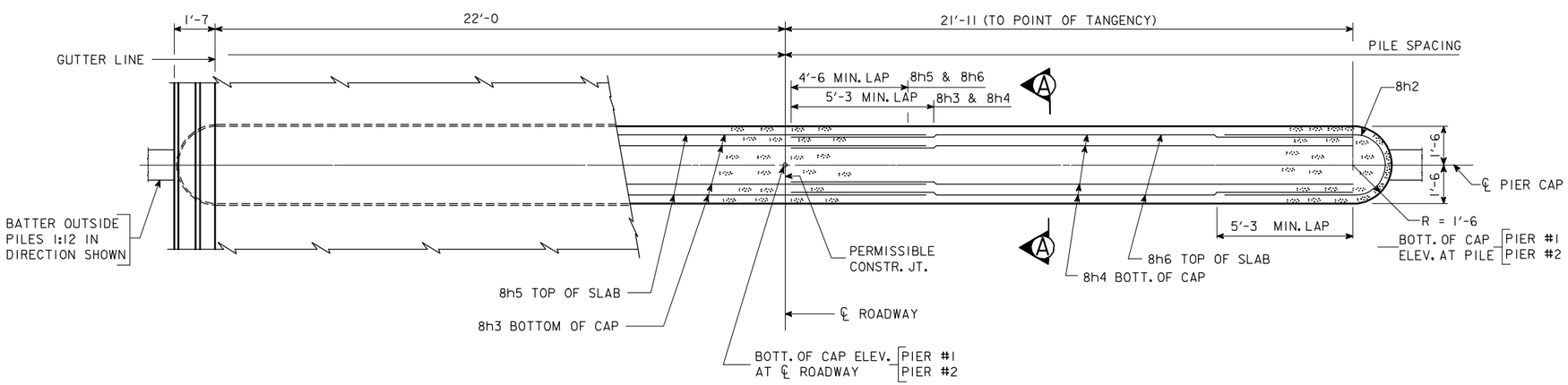

PIER PLAN

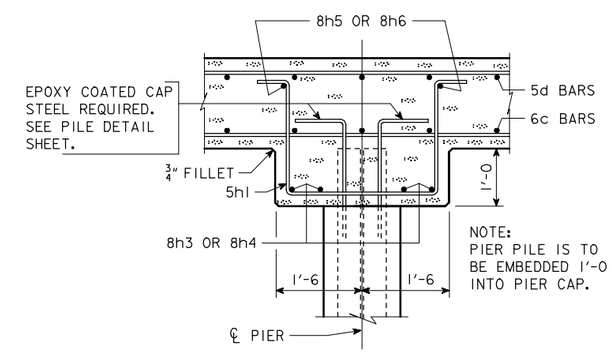

SECTION A-A

IOWA DEPARTMENT OF TRANSPORTATION - HIGHWAY DIVISION

DESIGN SHEET NO. ____ OF ____ FILE NO. _____ DESIGN NO. _____

DESIGN TEAM	CONCRETE SLAB, SUBSTRUCTURE DETAILS - 44' ROADWAY - 0° SKEW	STANDARD SHEET 4421	COUNTY	PROJECT NUMBER	SHEET NUMBER

REVISED 07-05 - PAVING NOTCH EXTENDED TO INTERCEPT THE WINGS. LONGIT. BARS EXTENDED 2" CLEAR OF WINGS.
ENGLISHCCSBRIDGES.DGN 4421 - 08-12-88

09-FEB-2006 10:26 ajeffer W:\Projects\0000006002\BRFinal\EnglishCCSBridges.dgn 4421

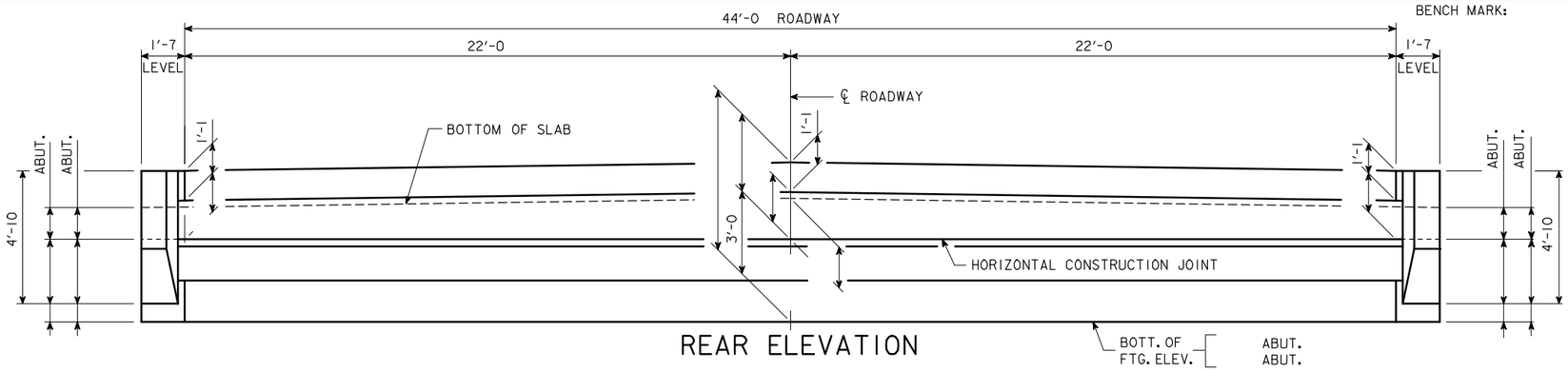

REAR ELEVATION

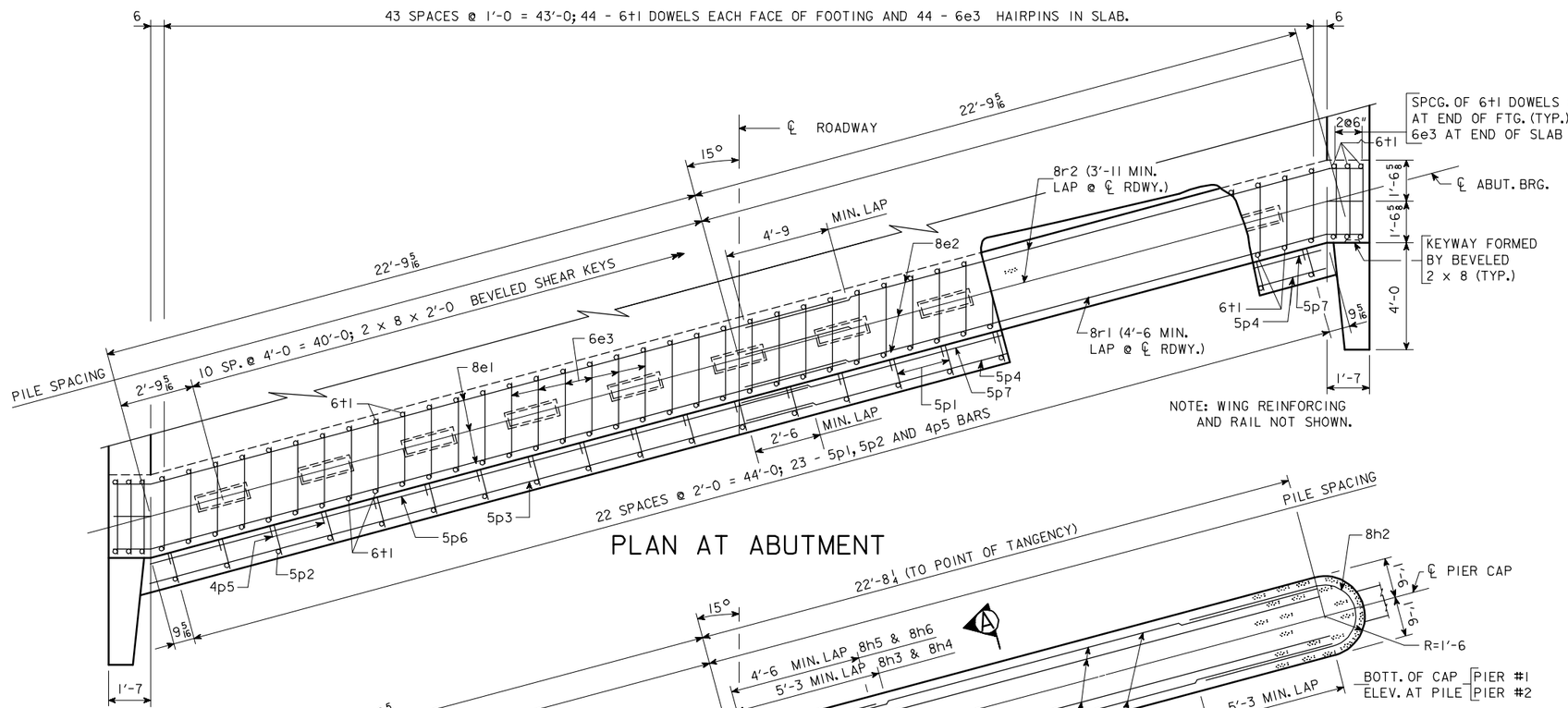

PLAN AT ABUTMENT

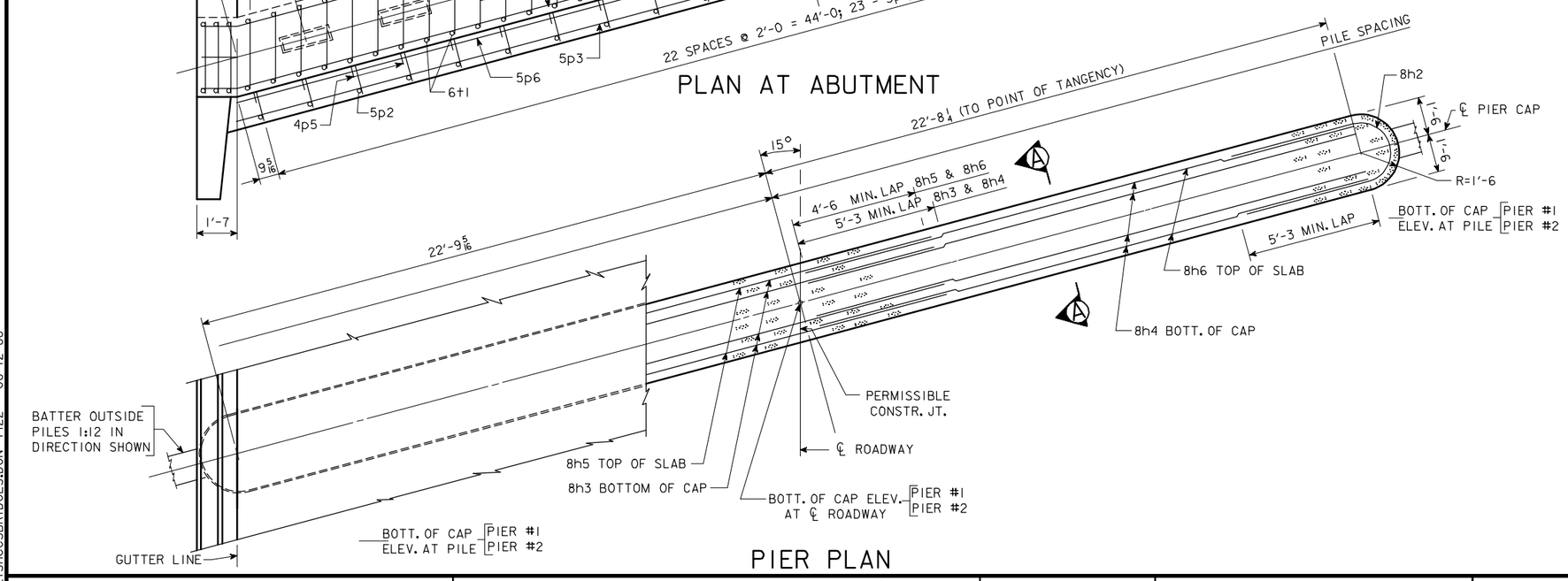

PIER PLAN

SUBSTRUCTURE NOTES:

MINIMUM CLEAR DISTANCE FROM FACE OF CONCRETE TO NEAR REINFORCING BAR IS TO BE 2" UNLESS OTHERWISE NOTED OR SHOWN.

THE TRANSVERSE REBARS ARE DETAILED WITH A SPLICE LAP. AT THE CONTRACTOR'S OPTION, THIS LAP MAY BE ELIMINATED BY FURNISHING FULL LENGTH BARS WITH NO REDUCTION IN PAY WEIGHT FOR SAME.

THE DESIGN BEARING FOR THE ABUTMENT PILES IS ?? TONS.

THE DESIGN BEARING FOR THE PIER PILES IS ?? TONS.

NOTE: BARRIER RAIL NOT SHOWN IN DETAILS.

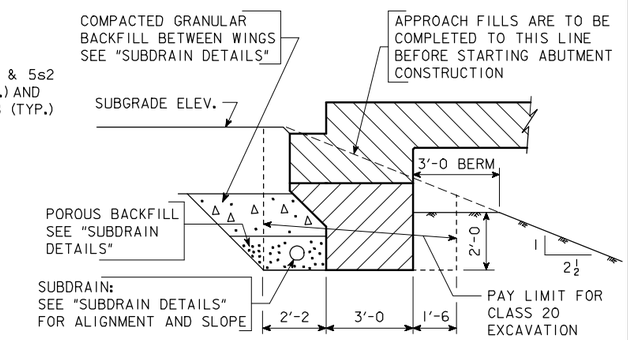

ABUTMENT EXCAVATION DETAILS

SECTION NORMAL TO ℄ ABUT. BRG.

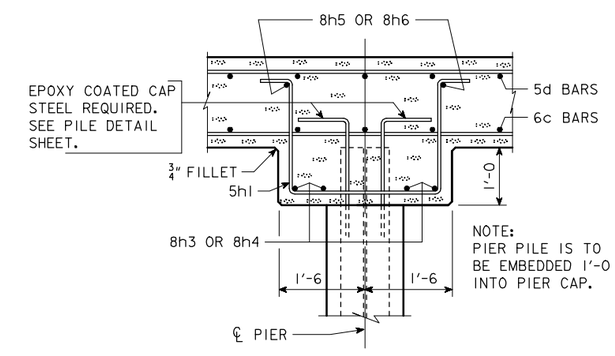

SECTION A-A

IOWA DEPARTMENT OF TRANSPORTATION - HIGHWAY DIVISION

DESIGN SHEET NO. ____ OF ____ FILE NO. _____ DESIGN NO. _____

REVISED 07-05 - PAVING NOTCH EXTENDED TO INTERCEPT THE WINGS. LONGIT. BARS EXTENDED 2" CLEAR OF WINGS.
ENGLISHCCSBRIDGES.DGN 4422 - 08-12-88

DESIGN TEAM	CONCRETE SLAB, SUBSTRUCTURE DETAILS - 44' ROADWAY - 15° SKEW R.A.	STANDARD SHEET 4422	COUNTY	PROJECT NUMBER	SHEET NUMBER

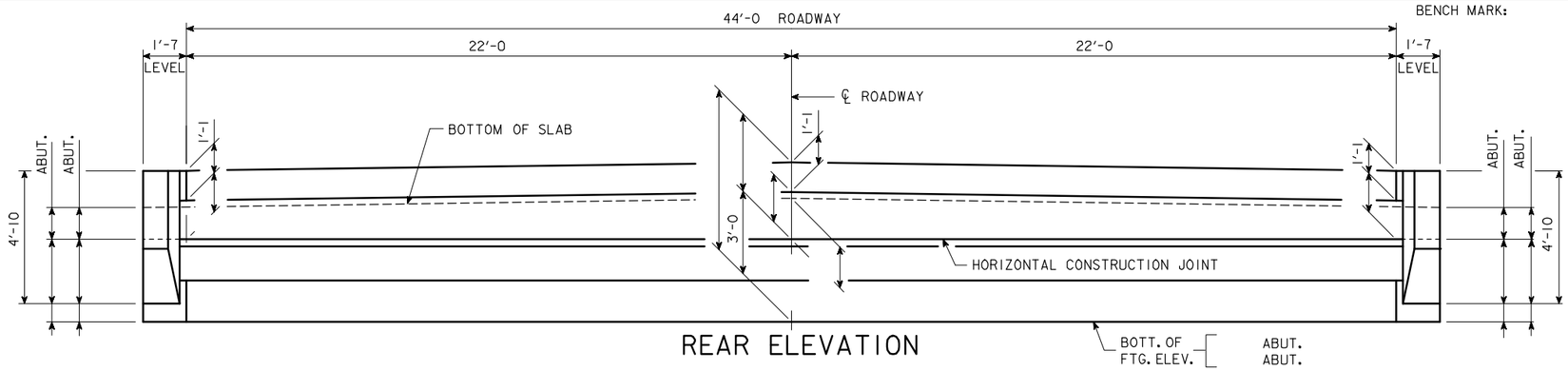

REAR ELEVATION

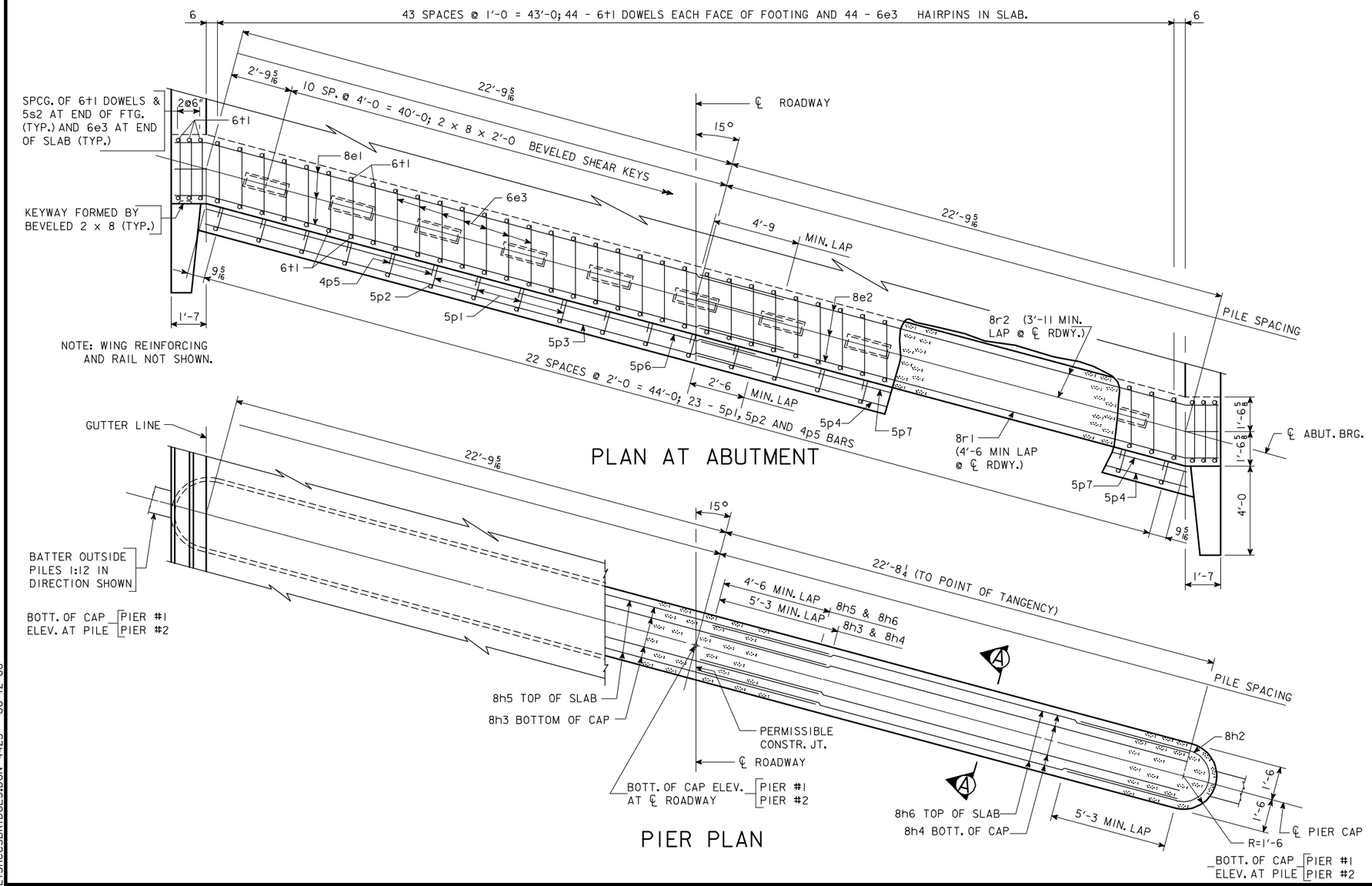

PLAN AT ABUTMENT

PIER PLAN

SUBSTRUCTURE NOTES:

MINIMUM CLEAR DISTANCE FROM FACE OF CONCRETE TO NEAR REINFORCING BAR IS TO BE 2" UNLESS OTHERWISE NOTED OR SHOWN.

THE TRANSVERSE REBARS ARE DETAILED WITH A SPLICE LAP. AT THE CONTRACTOR'S OPTION, THIS LAP MAY BE ELIMINATED BY FURNISHING FULL LENGTH BARS WITH NO REDUCTION IN PAY WEIGHT FOR SAME.

THE DESIGN BEARING FOR THE ABUTMENT PILES IS ?? TONS.

THE DESIGN BEARING FOR THE PIER PILES IS ?? TONS.

NOTE: BARRIER RAIL NOT SHOWN IN DETAILS.

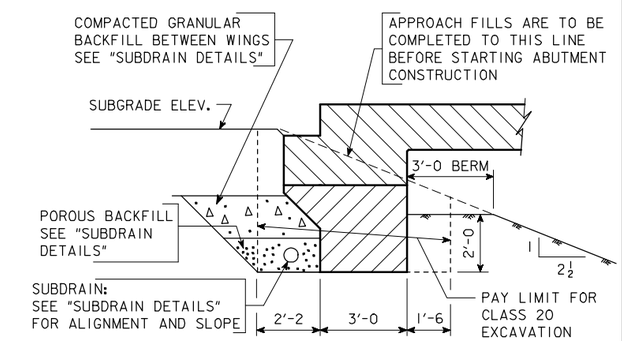

ABUTMENT EXCAVATION DETAILS

SECTION NORMAL TO ℄ ABUT. BRG.

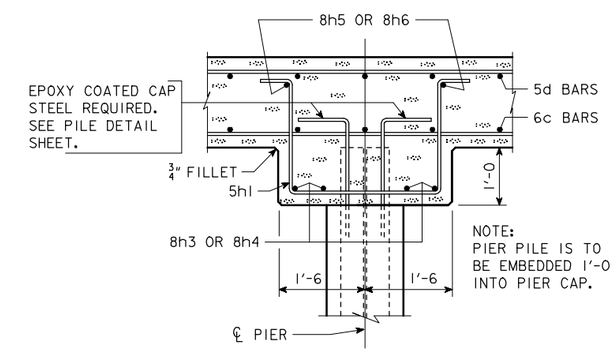

SECTION A-A

IOWA DEPARTMENT OF TRANSPORTATION - HIGHWAY DIVISION

DESIGN SHEET NO. ____ OF ____ FILE NO. _____ DESIGN NO. _____

REVISED 07-05 - PAVING NOTCH EXTENDED TO INTERCEPT THE WINGS. LONGIT. BARS EXTENDED 2" CLEAR OF WINGS.
ENGLISHCCSBRIDGES.DGN 4423 - 08-12-88

DESIGN TEAM	CONCRETE SLAB, SUBSTRUCTURE DETAILS - 44' ROADWAY - 15° SKEW L.A.	STANDARD SHEET 4423	COUNTY	PROJECT NUMBER	SHEET NUMBER

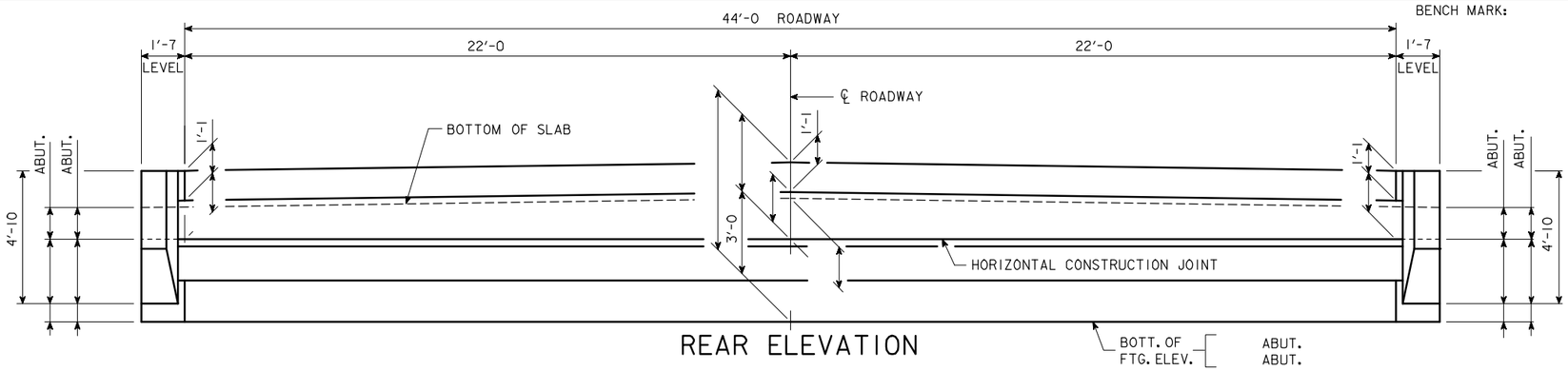

REAR ELEVATION

SUBSTRUCTURE NOTES:

MINIMUM CLEAR DISTANCE FROM FACE OF CONCRETE TO NEAR REINFORCING BAR IS TO BE 2" UNLESS OTHERWISE NOTED OR SHOWN.

THE TRANSVERSE REBARS ARE DETAILED WITH A SPLICE LAP. AT THE CONTRACTOR'S OPTION, THIS LAP MAY BE ELIMINATED BY FURNISHING FULL LENGTH BARS WITH NO REDUCTION IN PAY WEIGHT FOR SAME.

THE DESIGN BEARING FOR THE ABUTMENT PILES IS ?? TONS.

THE DESIGN BEARING FOR THE PIER PILES IS ?? TONS.

NOTE: BARRIER RAIL NOT SHOWN IN DETAILS.

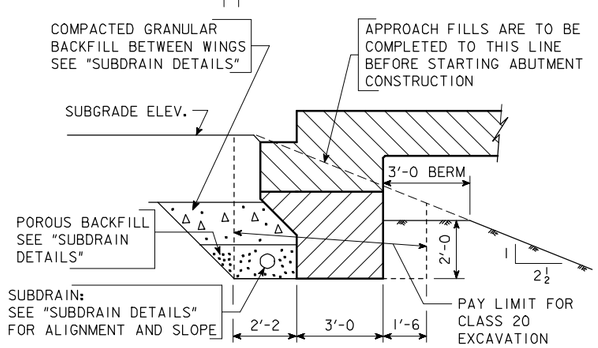

ABUTMENT EXCAVATION DETAILS

SECTION NORMAL TO ℄ ABUT. BRG.

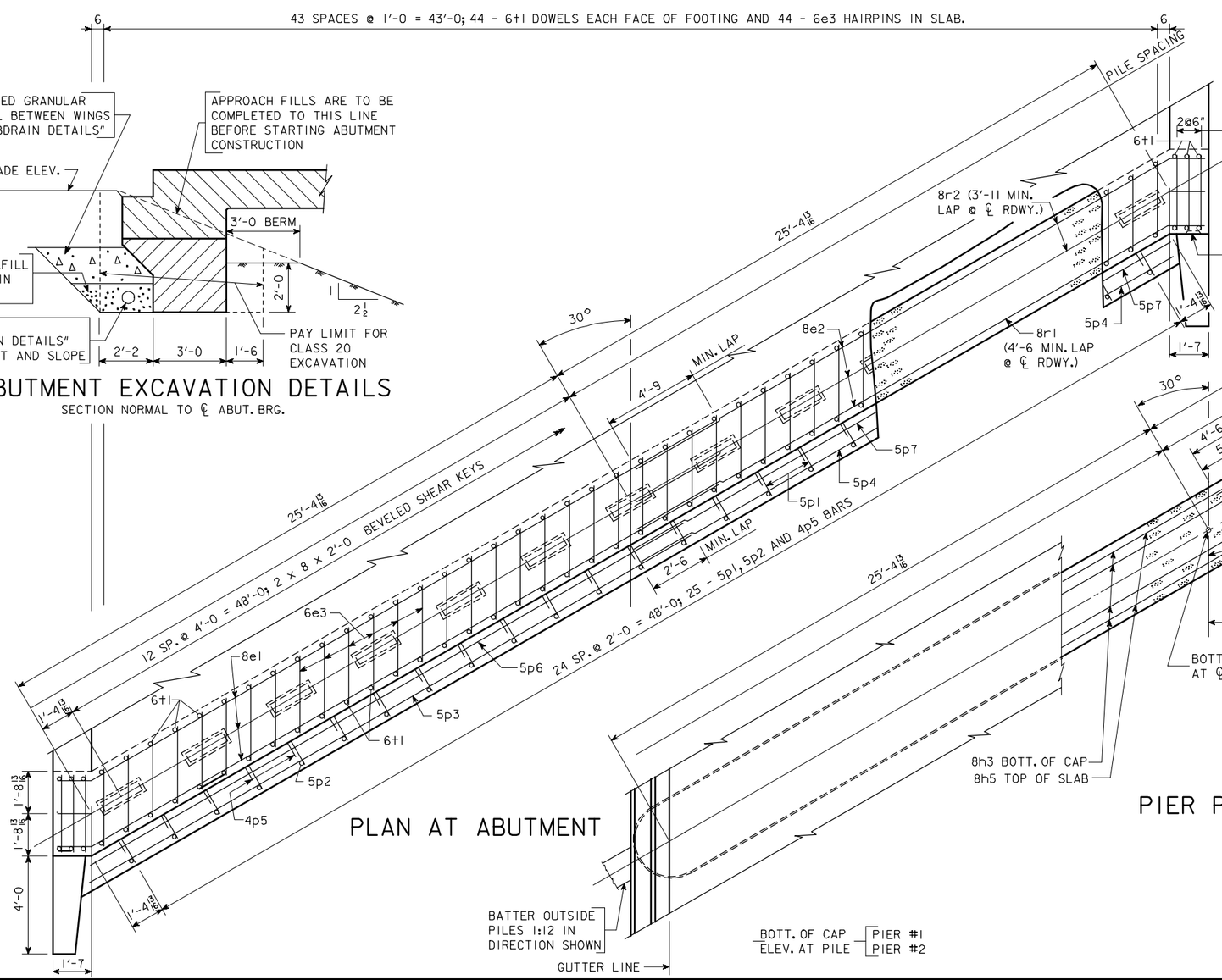

PLAN AT ABUTMENT

PIER PLAN

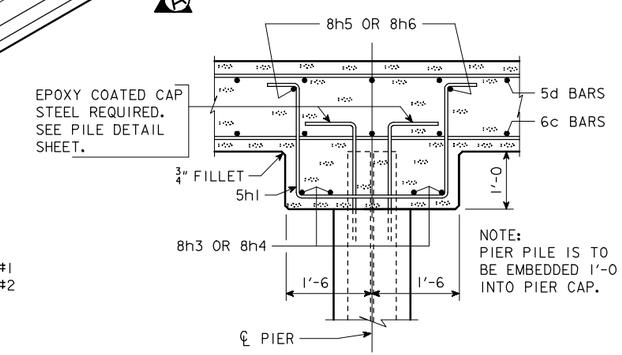

SECTION A-A

IOWA DEPARTMENT OF TRANSPORTATION - HIGHWAY DIVISION

DESIGN SHEET NO. ____ OF ____ FILE NO. _____ DESIGN NO. _____

DESIGN TEAM	CONCRETE SLAB, SUBSTRUCTURE DETAILS - 44' ROADWAY - 30° SKEW R.A.	STANDARD SHEET 4424	COUNTY	PROJECT NUMBER	SHEET NUMBER

REVISED 07-05 - PAVING NOTCH EXTENDED TO INTERCEPT THE WINGS. LONGIT. BARS EXTENDED 2" CLEAR OF WINGS.
ENGLISHCCSBRIDGES.DGN 4424 - 08-12-88

09-FEB-2006 10:27 ajeffer W:\Projects\0000006002\BRFinal\EnglishCCSBridges.dgn 4424

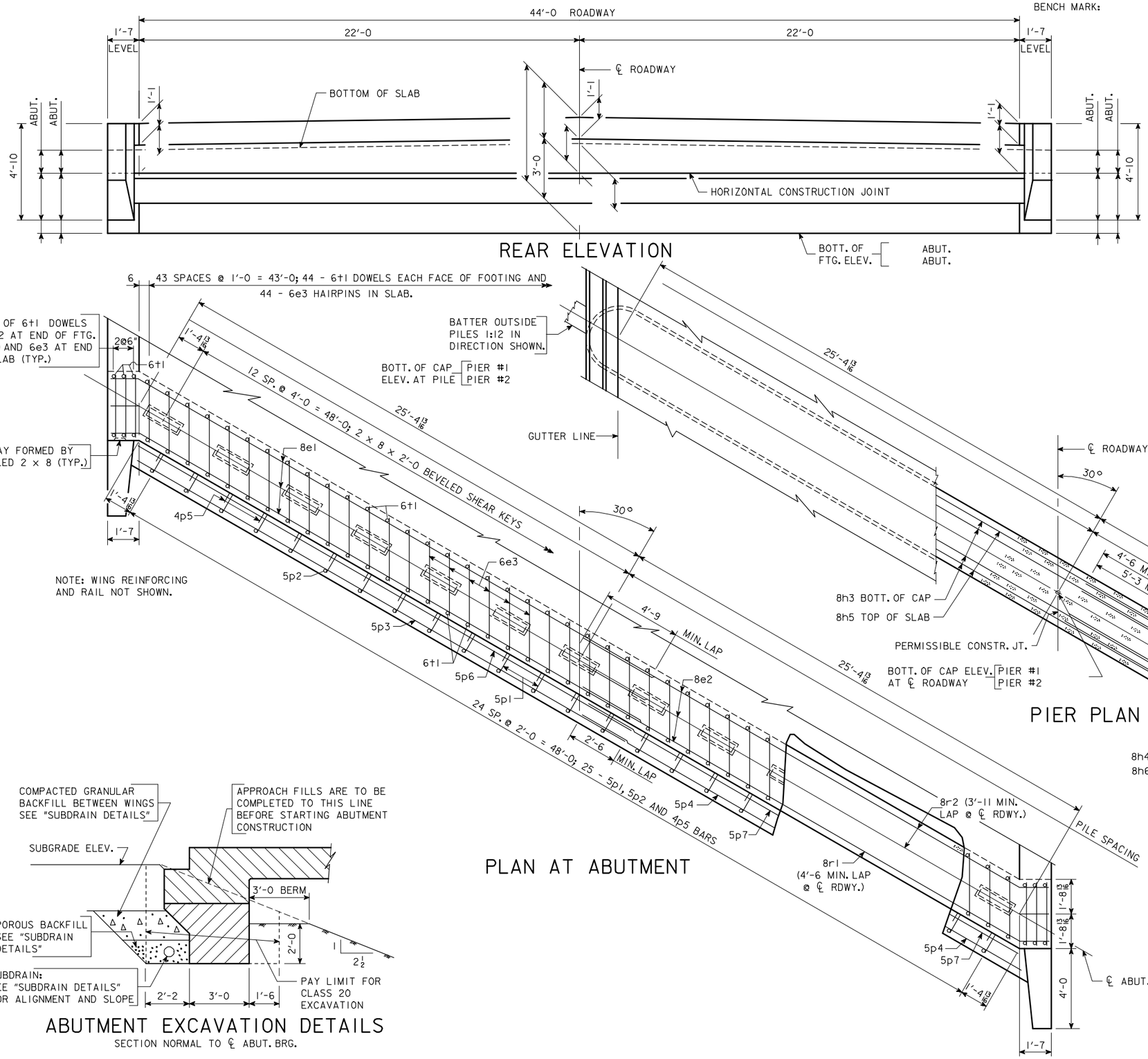

SUBSTRUCTURE NOTES:

MINIMUM CLEAR DISTANCE FROM FACE OF CONCRETE TO NEAR REINFORCING BAR IS TO BE 2" UNLESS OTHERWISE NOTED OR SHOWN.

THE TRANSVERSE REBARS ARE DETAILED WITH A SPLICE LAP. AT THE CONTRACTOR'S OPTION, THIS LAP MAY BE ELIMINATED BY FURNISHING FULL LENGTH BARS WITH NO REDUCTION IN PAY WEIGHT FOR SAME.

THE DESIGN BEARING FOR THE ABUTMENT PILES IS ?? TONS.

THE DESIGN BEARING FOR THE PIER PILES IS ?? TONS.

NOTE: BARRIER RAIL NOT SHOWN IN DETAILS.

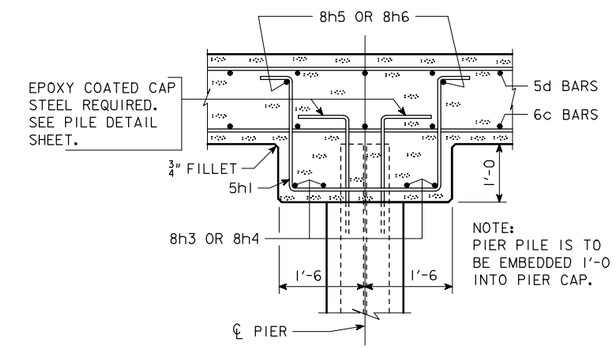

SECTION A-A

IOWA DEPARTMENT OF TRANSPORTATION - HIGHWAY DIVISION

DESIGN SHEET NO. ____ OF ____ FILE NO. _____ DESIGN NO. _____

DESIGN TEAM	CONCRETE SLAB, SUBSTRUCTURE DETAILS - 44' ROADWAY - 30° SKEW L.A.	STANDARD SHEET 4425	COUNTY	PROJECT NUMBER	SHEET NUMBER

REVISED 07-05 - PAVING NOTCH EXTENDED TO INTERCEPT THE WINGS. LONGIT. BARS EXTENDED 2" CLEAR OF WINGS.
ENGLISHCCSBRIDGES.DGN 4425 - 08-12-88

09-FEB-2006 10:28 ajeffer W:\Projects\0000006002\BRFinal\EnglishCCSBridges.dgn 4425

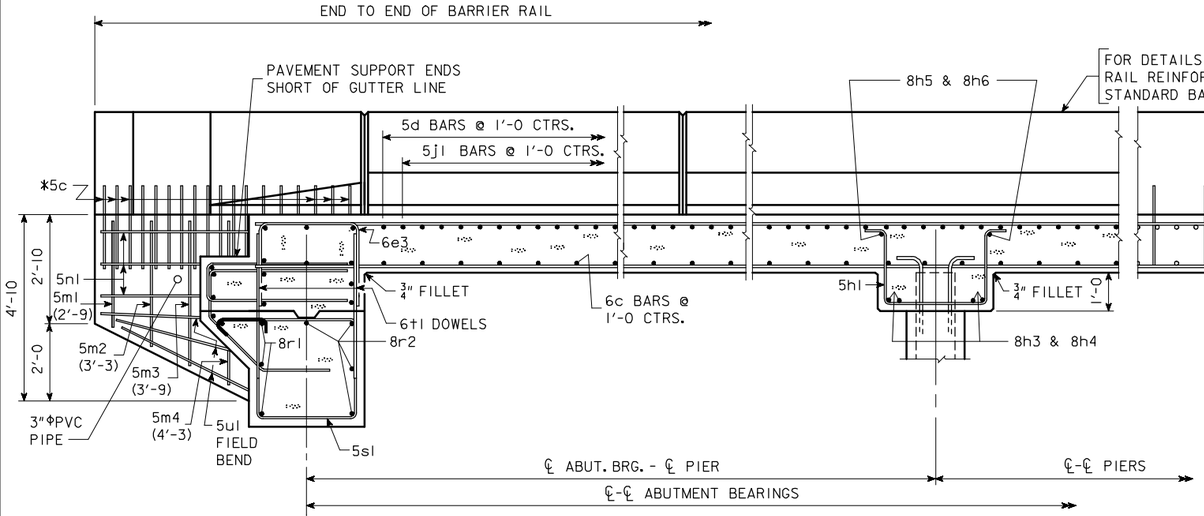

PART LONGITUDINAL SECTION NEAR GUTTER LINE

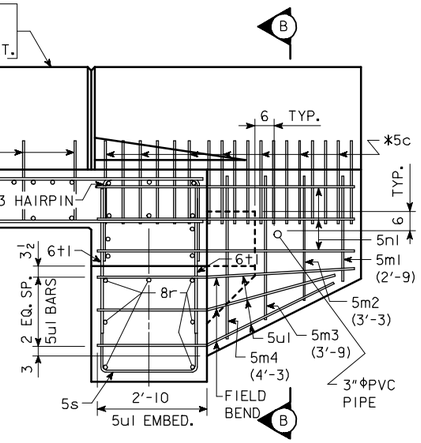

PART ELEVATION

NOTE:
PLUG 3"Φ PVC PIPE WITH EXPANDING FOAM PRIOR TO BACKFILLING BEHIND ABUTMENTS.

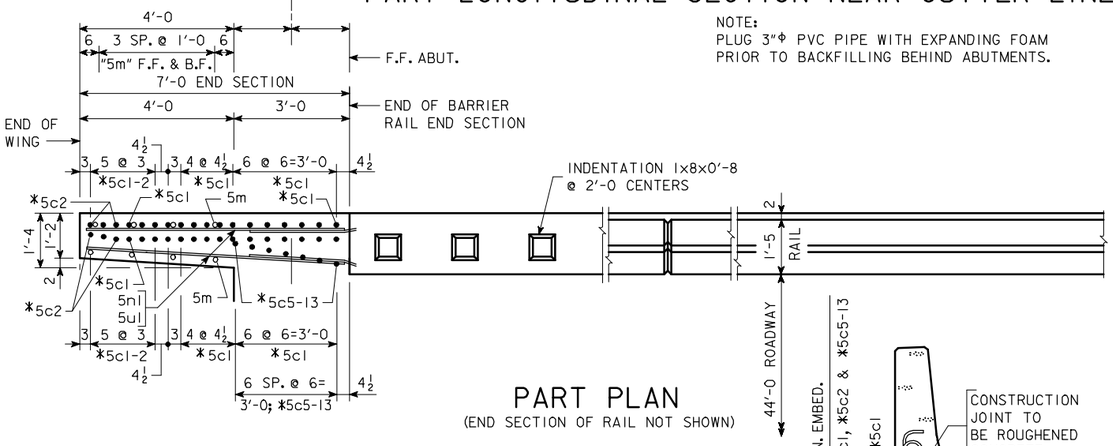

PART PLAN

(END SECTION OF RAIL NOT SHOWN)

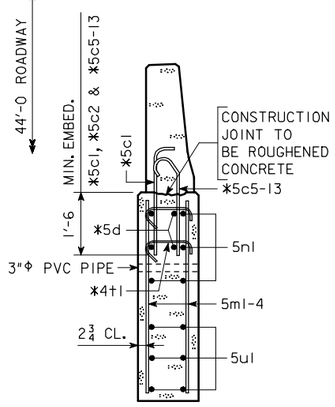

SECTION B-B

* NOTE: SEE END SECTION DETAILS IN THESE PLANS FOR DETAILS OF BARRIER RAIL END SECTION. REINFORCING BARS 5c1, 5c2, 5c5-13, 5d & 4t1 ARE INCLUDED IN THE SUPERSTRUCTURE QUANTITIES.

NOTE: 5m1-4 & 5n1 BARS ARE INCLUDED IN SUPERSTRUCTURE BAR LIST. 5c, 5d & 4t1 BARS ARE INCLUDED IN BARRIER RAIL BAR LIST.

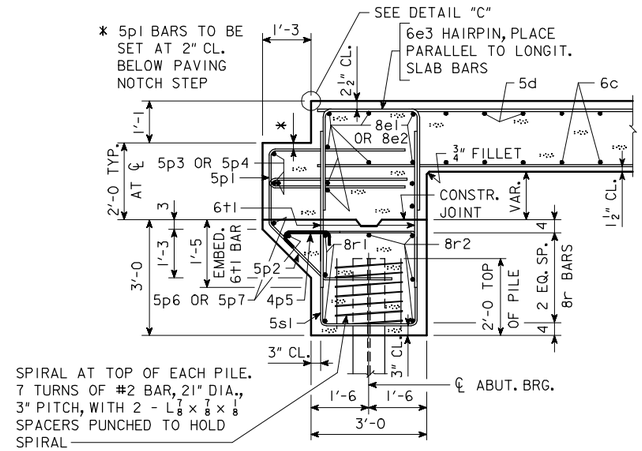

SECTION NORMAL TO ABUTMENT AT ℄

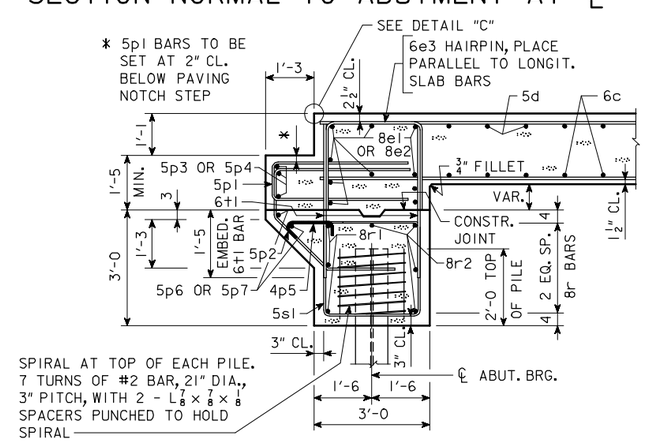

SECTION NORMAL TO ABUTMENT AT GUTTERLINE

NOTE THE LOCATION/RELATIONSHIP OF 8e1 AND 8e2 BARS IN THE BACKFACE OF THE DIAPHRAGM WITH THE 5p1 AND 5p2 BARS SHALL BE MAINTAINED AS THE DIAPHRAGM CHANGES DEPTH.

SUPERSTRUCTURE NOTES:

THIS BRIDGE IS DESIGNED FOR HS20-44 LOADING PLUS 20 LBS. PER SQ. FT. OF ROADWAY FOR FUTURE WEARING SURFACE.

THE BRIDGE FLOOR AS SHOWN INCLUDES 1/2" INTEGRAL WEARING SURFACE.

MINIMUM CLEAR DISTANCE FROM FACE OF CONCRETE TO NEAR REINFORCING BAR IS TO BE 2" UNLESS OTHERWISE NOTED OR SHOWN.

ALL REINFORCING BARS (EXCEPT WING BARS) AND ALL BARRIER RAIL REINFORCING MUST BE EPOXY COATED.

THE TRANSVERSE REBARS ARE DETAILED WITH A SPLICE LAP. AT THE CONTRACTOR'S OPTION, THIS LAP MAY BE ELIMINATED BY FURNISHING FULL LENGTH BARS WITH NO REDUCTION IN PAY WEIGHT FOR SAME.

TOP MAT OF REINFORCING STEEL IS TO BE SUPPORTED BY INDIVIDUAL METAL BAR CHAIRS SPACED AT NOT MORE THAN 3'-0 CENTERS LONGITUDINALLY AND TRANSVERSELY. THE BOTTOM MAT OF REINFORCING STEEL IS TO BE SUPPORTED BY INDIVIDUAL METAL BAR CHAIRS SPACED AT NOT MORE THAN 3'-0 CENTERS LONGITUDINALLY AND TRANSVERSELY, OR BY CONTINUOUS ROWS OF METAL HIGH CHAIR OR SLAB BOLSTERS SPACED 4'-0 APART. BAR CHAIRS SUPPORTING SLAB REINFORCING STEEL ARE TO BE EPOXY COATED.

THE CONCRETE SLAB IS TO BE PLACED WITH A MINIMUM OF CONSTRUCTION JOINTS. PROCEDURES FOR PLACING SLAB CONCRETE SHALL BE SUBMITTED FOR APPROVAL TOGETHER WITH A STATEMENT OF THE PROPOSED METHOD AND EVIDENCE THAT THE CONTRACTOR POSSESSES THE NECESSARY EQUIPMENT AND FACILITIES TO ACCOMPLISH THE REQUIRED RESULT. SLAB FALSEWORK SHALL BE REMOVED PRIOR TO CONSTRUCTION OF THE BARRIER RAILS, UNLESS SLAB CONSTRUCTION IS STAGED. SLAB FALSEWORK SHALL NOT BE REMOVED UNTIL THE FULL WIDTH SLAB HAS BEEN PLACED AND HAS ATTAINED THE AGE AND STRENGTH REQUIRED BY THE STANDARD SPECIFICATIONS.

REINFORCING BAR LIST-ONE ABUTMENT

	BAR	LOCATION	SHAPE	NO.	LENGTH	WEIGHT
EPOXY-COATED	5p2	PAVING SUPPORT, TRANSV.			9'-4	
	4p5	PAVING SUPPORT, TRANSV.			1'-11	
	5p6	PAVING SUPPORT, LONGIT., SIDE "A"	—	2		
	5p7	PAVING SUPPORT, LONGIT., SIDE "B"	—	2		
	8r1	FOOTING, LONGIT., B.F.H.	—	6		
	5s1	FOOTING, HOOPS			11'-0	
	5s2	FOOTING, HOOPS @ ENDS		6		
	6t1	FOOTING TO SLAB DOWELS	—	100	3'-11	588
		REINFORCING STEEL, EPOXY-COATED - TOTAL (LBS.)				
NON-COATED	8r2	FOOTING, LONGIT., F.F.H.	—	8		
	5u1	WING, LONGITUDINAL	—	12	6'-8	83
	#2	PILE SPIRAL			38'-6	
		SPIRAL SPACERS L 7/8 x 7/8 x 1/8 x 0.70	—		1'-10	
		REINFORCING STEEL - TOTAL (LBS.)				

BENT BAR DETAILS

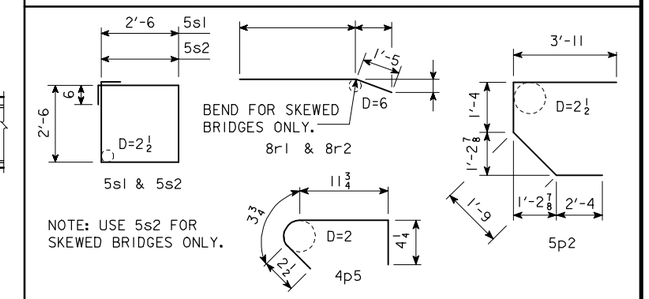

ESTIMATED QUANTITIES-TWO ABUTMENTS

ITEM		UNITS	QUANTITY
STRUCTURAL CONCRETE (BRIDGE)		CU. YDS.	
REINFORCING STEEL, EPOXY-COATED		LBS.	
REINFORCING STEEL		LBS.	
CLASS 20 EXCAVATION		CU. YDS.	
	FURNISH	LIN.FT.	
	DRIVE	LIN.FT.	

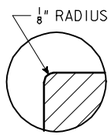

DETAIL "C"

IOWA DEPARTMENT OF TRANSPORTATION - HIGHWAY DIVISION
DESIGN SHEET NO. ____ OF ____ FILE NO. _____ DESIGN NO. _____

DESIGN TEAM	CONCRETE SLAB, LONGIT. SECTION - 44' ROADWAY	STANDARD SHEET 4426	COUNTY	PROJECT NUMBER	SHEET NUMBER

REVISED 07-05 - 3" PVC PIPE ADDED TO WINGS AND NOTE.
ENGLISHCCSBRIDGES.DGN 4426 - 08-12-88

09-FEB-2006 10:28 ajeffer W:\Projects\0000006002\BRFinal\EnglishCCSBridges.dgn 4426

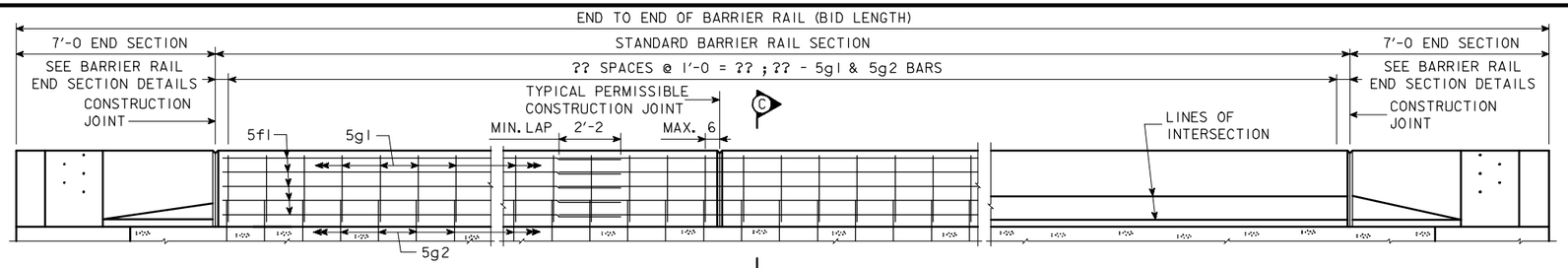

ELEVATION OF BARRIER RAIL

EPOXY COATED REINFORCING STEEL - TWO RAILS

SECTION	BAR	LOCATION	SHAPE	NUMBER	LENGTH	WEIGHT
2 STANDARD SECTIONS	5g1	RAIL, VERTICAL			5'-11	
	5g2	RAIL TO SLAB				
	5f1	RAIL, LONGITUDINAL				
	BARRIER RAIL END SECTION			4 AT 381 LBS.		1524
	TOTAL WEIGHT OF RE-BAR IN RAIL (INCLUDE WITH SUPERSTRUCTURE REINFORCING)				TOTAL (LBS.)	

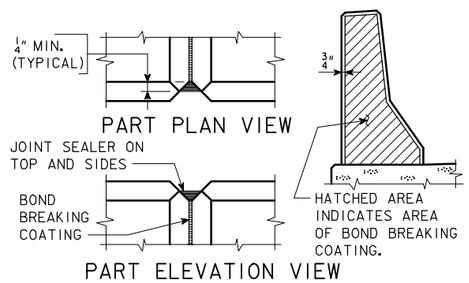

BARRIER RAIL JOINT DETAILS

BENT BAR DETAILS

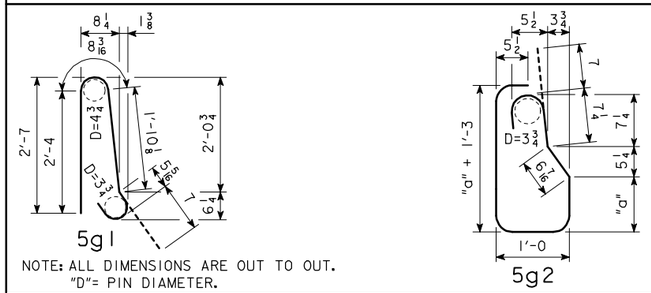

5g2 BARS		
BRIDGE	"a"	LENGTH
70'	1'-2	6'-10
80'	1'-2 3/4	6'-11
90'	1'-3 3/4	7'-1
100'	1'-5	7'-4
110'	1'-6	7'-6
120'	1'-7 1/2	7'-9
130'	1'-8 3/4	7'-11

LINEAL FEET OF BARRIER RAIL

BRIDGE LENGTH		70'	80'	90'	100'	110'	120'	130'
CONCRETE BARRIER RAIL (LIN. FT.)	0° SKEW	162.0	182.0	202.0	222.0	242.0	262.0	282.0
	15° SKEW	162.2	182.2	202.2	222.2	242.2	262.2	282.2
	30° SKEW	162.9	182.9	202.9	222.9	242.9	262.9	282.9

CONCRETE QUANTITY = ?? CU. YDS.
(INCLUDES 4 END SECTIONS AT 0.62 CU.YDS. EACH)

BARRIER RAIL NOTES:

MINIMUM CLEAR DISTANCE FROM FACE OF CONCRETE TO NEAR REINFORCING BAR IS TO BE 2" UNLESS OTHERWISE NOTED OR SHOWN.

THE PERMISSIBLE CONSTRUCTION JOINTS ARE TO BE PLACED BETWEEN VERTICAL BARS AT A MINIMUM SPACING OF 20 FEET. CONSTRUCTION JOINT CONTACT SURFACES ARE TO BE COATED WITH AN APPROVED BOND BREAKER.

COST OF THE JOINT SEALER AND BOND BREAKER SHALL BE CONSIDERED INCIDENTAL TO OTHER CONSTRUCTION.

ALL BARRIER RAIL REINFORCING STEEL IS TO BE EPOXY COATED.

THE CONCRETE BARRIER RAIL IS TO BE BID ON A LINEAL FOOT BASIS. THE NUMBER OF LINEAL FEET OF BARRIER RAIL INSTALLED WILL BE PAID FOR AT THE CONTRACT PRICE PER LINEAL FOOT BASED ON PLAN QUANTITIES. PRICE BID FOR CONCRETE BARRIER RAILING SHALL BE FULL COMPENSATION FOR FURNISHING ALL MATERIAL, EXCLUDING REINFORCING STEEL, AND ALL OF THE EQUIPMENT AND LABOR REQUIRED TO ERECT THE RAIL IN ACCORDANCE WITH THESE PLANS AND CURRENT SPECIFICATIONS. IF CONDUIT IS REQUIRED IN THIS PLAN THE RIGID STEEL CONDUIT, JUNCTION BOXES AND FITTINGS INCLUDING LABOR AND ANY ADDITIONAL WORK TO DO THE INSTALLATION IS CONSIDERED INCIDENTAL TO THE COST OF THE RAILING.

ALL BARRIER RAIL REINFORCING STEEL IS TO BE INCLUDED WITH THE SUPERSTRUCTURE REINFORCING STEEL.

THE JOINT SEALER SHALL BE LIGHT GRAY NONSAG LATEX CAULKING SEALER MARKETED FOR OUTDOOR USE. NO TESTING OR CERTIFICATION IS REQUIRED.

TOP OF THE BARRIER RAIL IS TO BE PARALLEL TO THE THEORETICAL ℄ GRADE.

CROSS SECTIONAL AREA OF THE STANDARD SECTION OF THE BARRIER RAIL = 2.84 SQUARE FEET.

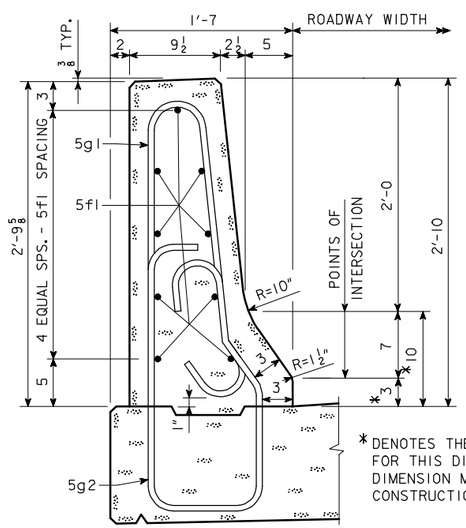

* DENOTES THE MAXIMUM VALUE FOR THIS DIMENSION. THIS DIMENSION MAY VARY DUE TO CONSTRUCTION INACCURACIES.

PART SECTION C-C

NOTE:
SEE BARRIER RAIL END SECTION WITH 4'-0 WING IN THESE PLANS FOR DETAILS NOT SHOWN ON THIS SHEET.

IOWA DEPARTMENT OF TRANSPORTATION - HIGHWAY DIVISION
DESIGN SHEET NO. ____ OF ____ FILE NO. _____ DESIGN NO. _____

DESIGN TEAM	CONCRETE SLAB BARRIER RAIL - 44' ROADWAY	STANDARD SHEET 4427	COUNTY	PROJECT NUMBER	SHEET NUMBER

REVISED 09-01 - STD. SHEET NO. RENAMED 4427 (CADD NAME HE4427.S01). BARRIER RAIL END SECTION DETAILS MOVED TO STD. SHEET 1017.
ENGLISHCCSBRIDGES.DGN 4427 - 02-00

09-FEB-2006 10:29 ajeffer W:\Projects\0000006002\BRFinal\EnglishCCSBridges.dgn 4427

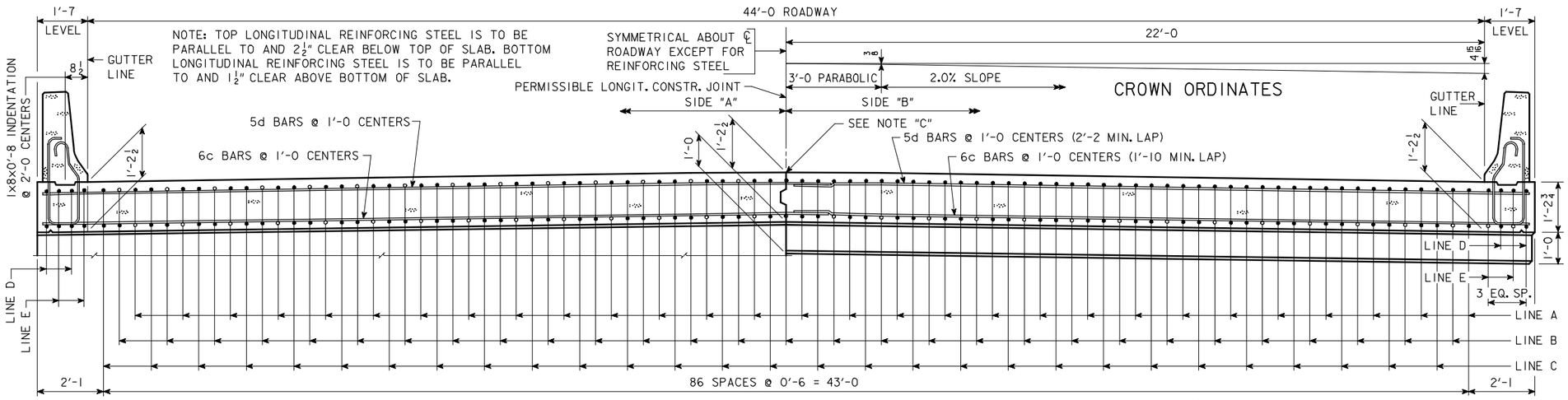

HALF SECTION NEAR ABUTMENT

NOTE "C": IF PERMISSIBLE LONGITUDINAL JOINT IS USED, BARS ON ℄ ROADWAY MAY BE SHIFTED TO CLEAR JOINT BY 1".

SLAB CROSS-SECTIONAL AREA-SIDE "A"	=	28.80 SQ. FT.
SLAB CROSS-SECTIONAL AREA-SIDE "B"	=	28.80 SQ. FT.
BARRIER RAIL CROSS-SECTIONAL AREA-ONE RAIL	=	2.84 SQ. FT.

HALF SECTION NEAR PIER

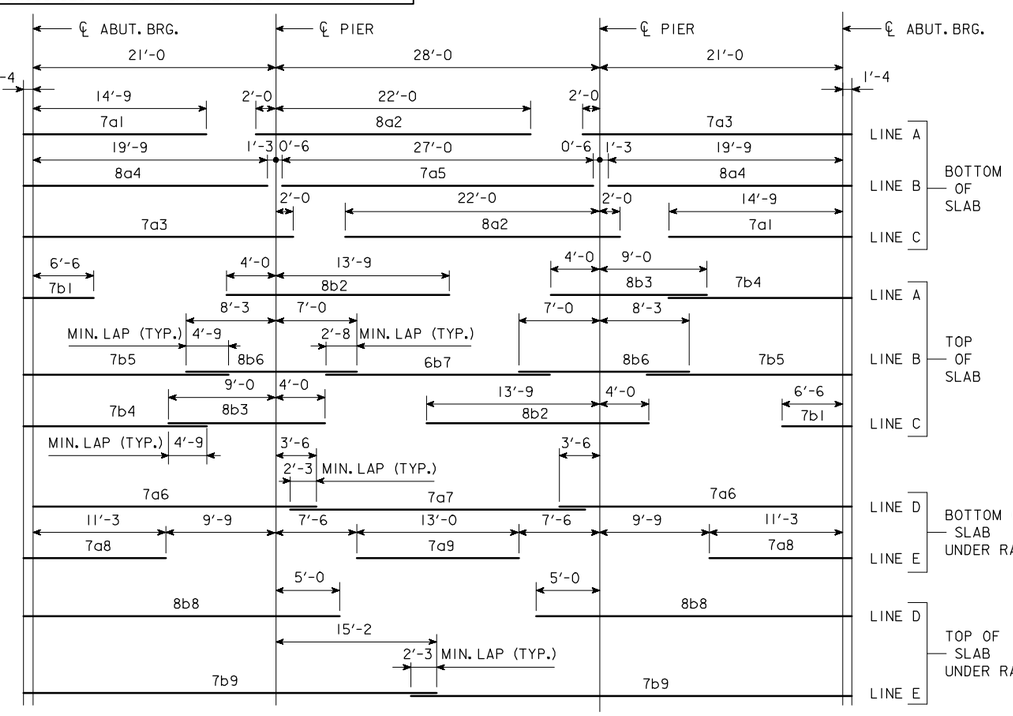

PLACEMENT FOR LONGITUDINAL REINFORCEMENT

* WING REINFORCING MAY BE UNCOATED

EPOXY COATED REINFORCING BAR LIST SUPERSTRUCTURE

	BAR	LOCATION	SHAPE	NO.	LENGTH	WEIGHT
	7a1	BOTT. OF SLAB, LONGIT.	—	58	16'-1	1907
	8a2	BOTT. OF SLAB, LONGIT.	—	58	24'-0	3717
	7a3	BOTT. OF SLAB, LONGIT.	—	58	24'-4	2885
	8a4	BOTT. OF SLAB, LONGIT.	—	58	21'-1	3265
	7a5	BOTT. OF SLAB, LONGIT.	—	29	27'-0	1600
	7a6	BOTT. OF SLAB, LONGIT., AT RAIL	—	8	25'-10	422
	7a7	BOTT. OF SLAB, LONGIT., AT RAIL	—	4	25'-6	208
	7a8	BOTT. OF SLAB, LONGIT., AT RAIL	—	8	12'-7	206
	7a9	BOTT. OF SLAB, LONGIT., AT RAIL	—	4	13'-0	106
	7b1	TOP OF SLAB, LONGIT.	—	58	7'-10	929
	8b2	TOP OF SLAB, LONGIT.	—	58	17'-9	2749
	8b3	TOP OF SLAB, LONGIT.	—	58	13'-0	2013
	7b4	TOP OF SLAB, LONGIT.	—	58	18'-1	2144
	7b5	TOP OF SLAB, LONGIT.	—	58	18'-10	2233
	8b6	TOP OF SLAB, LONGIT.	—	58	15'-3	2362
	6b7	TOP OF SLAB, LONGIT.	—	29	19'-4	842
	8b8	TOP OF SLAB, LONGIT., AT RAIL	—	8	27'-4	584
	7b9	TOP OF SLAB, LONGIT., AT RAIL	—	8	37'-6	613
	6c1	BOTT. OF SLAB, TRANSV., SIDE "A"	—			
	6c2	BOTT. OF SLAB, TRANSV., SIDE "B"	—			
	5d1	TOP OF SLAB, TRANSV., SIDE "A"	—			
	5d2	TOP OF SLAB, TRANSV., SIDE "B"	—			
	8e1	SLAB, TRANSV., AT ABUT., SIDE "A"		20		
	8e2	SLAB, TRANSV., AT ABUT., SIDE "B"		20		
	6e3	SLAB, HAIRPINS, AT ABUT.	⊓	100		
	5h1	PIER CAP HOOPS	⊔		6'-11	
	8h2	PIER CAP ENDS	⊂	4	14'-5	154
	8h3	PIER CAP, BOTT., LONGIT., SIDE "A"	—	8		
	8h4	PIER CAP, BOTT., LONGIT., SIDE "B"	—	8		
	8h5	PIER CAP, TOP, LONGIT., SIDE "A"	—	4		
	8h6	PIER CAP, TOP, LONGIT., SIDE "B"	—	4		
	5j1	TOP OF SLAB, TRANSV., AT RAIL	—		5'-9	
*	5m1-4	WING, VERTICAL	—	32	SHOWN	117
*	5n1	WING, HORIZONTAL	—	24	6'-8	167
	5p1	PAVING SUPPORT, TRANSV.	⊏		8'-10	
	5p3	PAVING SUPPORT, LONGIT., SIDE "A"	—	6		
	5p4	PAVING SUPPORT, LONGIT., SIDE "B"	—	6		
		BARRIER RAIL - SEE DESIGN SHEET ???				
		REINFORCING STEEL EPOXY COATED TOTAL (LBS)				

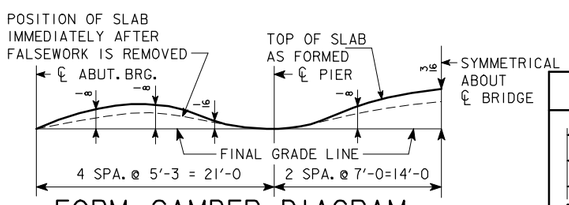

FORM CAMBER DIAGRAM

THIS DIAGRAM SHOWS THE FORM CAMBER REQUIRED TO COMPENSATE FOR THE ANTICIPATED ULTIMATE DEAD LOAD DEFLECTION. THE ABOVE DIMENSIONS DO NOT INCLUDE ANY ALLOWANCE FOR FORM DEFLECTION OR FALSEWORK SETTLEMENT.

BENT BAR DETAILS

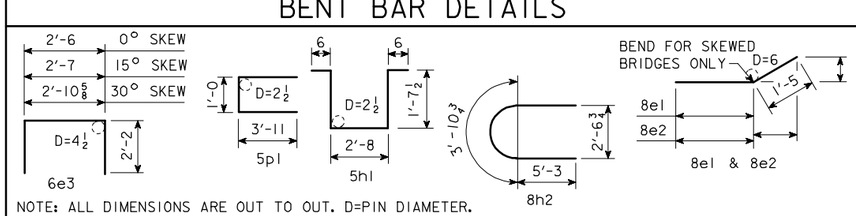

NOTE: ALL DIMENSIONS ARE OUT TO OUT. D=PIN DIAMETER.

ESTIMATED QUANT.-SUPERSTR.

ITEM		UNITS	QUANTITY
STRUCTURAL CONCRETE (BRIDGE)		CU.YDS.	
REINFORCING STEEL, EPOXY COATED		LBS.	
	FURNISH	LIN.FT.	
	DRIVE	LIN.FT.	

STRUCTURAL CONCRETE QUANTITY INCLUDES SLAB WITH INTEGRAL PIER CAPS AND WINGS. FOR TABULATION, SEE "CONCRETE PLACEMENT QUANTITIES-SUPERSTRUCTURE".

IOWA DEPARTMENT OF TRANSPORTATION - HIGHWAY DIVISION
DESIGN SHEET NO. ____ OF ____ FILE NO. _____ DESIGN NO. _____

REVISED 02-05 - PAVING NOTCH BENT BARS AND BAR LIST CHANGED.
ENGLISHCCSBRIDGES.DGN 4428 - 08-12-88

DESIGN TEAM	CONCRETE SLAB, SUPERSTRUCTURE DETAILS-44' ROADWAY-70' BRIDGE	STANDARD SHEET 4428	COUNTY	PROJECT NUMBER	SHEET NUMBER

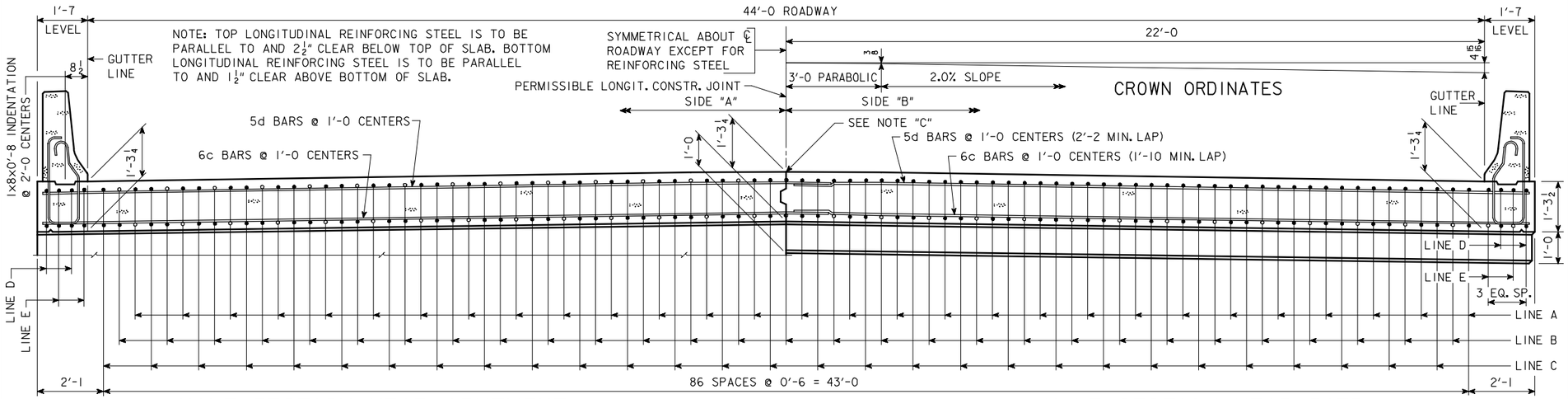

HALF SECTION NEAR ABUTMENT

NOTE "C": IF PERMISSIBLE LONGITUDINAL JOINT IS USED, BARS ON ℄ ROADWAY MAY BE SHIFTED TO CLEAR JOINT BY 1".

SLAB CROSS-SECTIONAL AREA-SIDE "A"	=	30.27	SQ. FT.
SLAB CROSS-SECTIONAL AREA-SIDE "B"	=	30.27	SQ. FT.
BARRIER RAIL CROSS-SECTIONAL AREA-ONE RAIL	=	2.84	SQ. FT.

HALF SECTION NEAR PIER

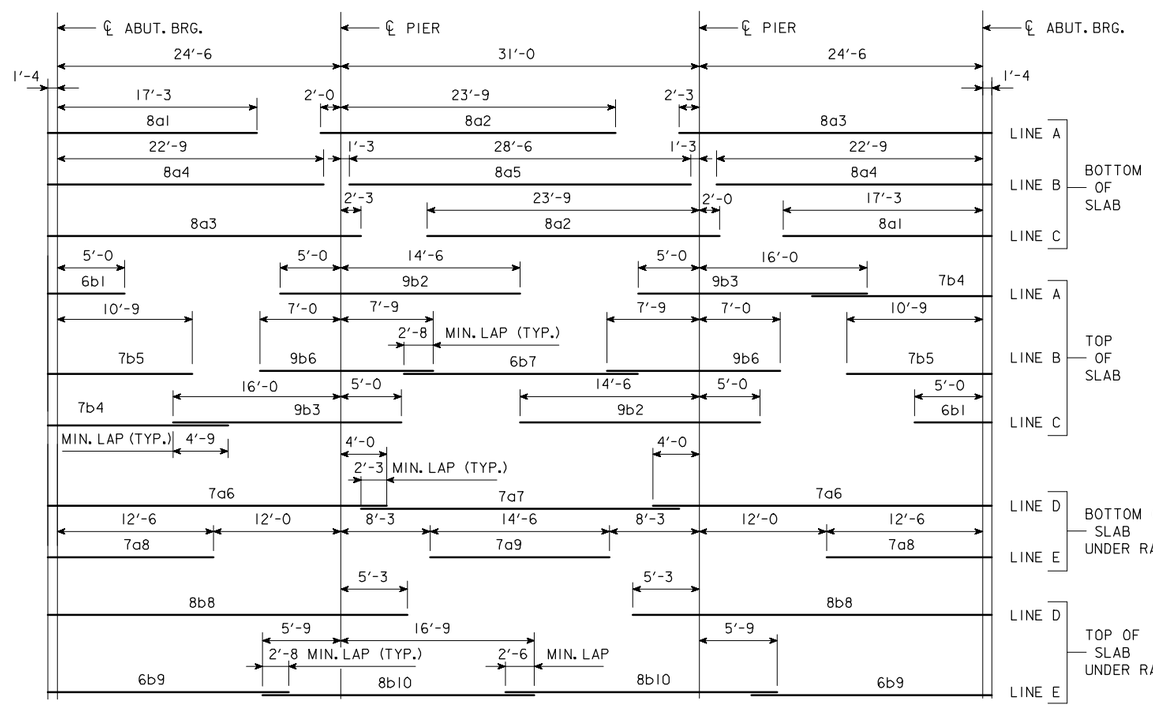

PLACEMENT FOR LONGITUDINAL REINFORCEMENT

* WING REINFORCING MAY BE UNCOATED

EPOXY COATED REINFORCING BAR LIST SUPERSTRUCTURE

BAR	LOCATION	SHAPE	NO.	LENGTH	WEIGHT
8a1	BOTT. OF SLAB, LONGIT.	——	58	18'-7	2878
8a2	BOTT. OF SLAB, LONGIT.	——	58	25'-9	3988
8a3	BOTT. OF SLAB, LONGIT.	——	58	28'-1	4349
8a4	BOTT. OF SLAB, LONGIT.	——	58	24'-1	3729
8a5	BOTT. OF SLAB, LONGIT.	——	29	28'-6	2207
7a6	BOTT. OF SLAB, LONGIT., AT RAIL	——	8	29'-10	488
7a7	BOTT. OF SLAB, LONGIT., AT RAIL	——	4	27'-6	225
7a8	BOTT. OF SLAB, LONGIT., AT RAIL	——	8	13'-10	226
7a9	BOTT. OF SLAB, LONGIT., AT RAIL	——	4	14'-6	119
6b1	TOP OF SLAB, LONGIT.	——	58	6'-4	552
9b2	TOP OF SLAB, LONGIT.	——	58	19'-6	3845
9b3	TOP OF SLAB, LONGIT.	——	58	21'-0	4141
7b4	TOP OF SLAB, LONGIT.	——	58	14'-7	1729
7b5	TOP OF SLAB, LONGIT.	——	58	12'-1	1432
9b6	TOP OF SLAB, LONGIT.	——	58	14'-9	2909
6b7	TOP OF SLAB, LONGIT.	——	29	20'-10	907
8b8	TOP OF SLAB, LONGIT., AT RAIL	——	8	31'-1	664
6b9	TOP OF SLAB, LONGIT., AT RAIL	——	8	22'-9	273
8b10	TOP OF SLAB, LONGIT., AT RAIL	——	8	22'-6	481
6c1	BOTT. OF SLAB, TRANSV., SIDE "A"	——			
6c2	BOTT. OF SLAB, TRANSV., SIDE "B"	——			
5d1	TOP OF SLAB, TRANSV., SIDE "A"	——			
5d2	TOP OF SLAB, TRANSV., SIDE "B"	——			
8e1	SLAB, TRANSV., AT ABUT., SIDE "A"		20		
8e2	SLAB, TRANSV., AT ABUT., SIDE "B"		20		
6e3	SLAB, HAIRPINS, AT ABUT.	⊓	100		
5h1	PIER CAP HOOPS	⊔		7'-1	
8h2	PIER CAP ENDS	⊂	4	14'-5	154
8h3	PIER CAP, BOTT., LONGIT., SIDE "A"	——	8		
8h4	PIER CAP, BOTT., LONGIT., SIDE "B"	——	8		
8h5	PIER CAP, TOP, LONGIT., SIDE "A"	——	4		
8h6	PIER CAP, TOP, LONGIT., SIDE "B"	——	4		
5j1	TOP OF SLAB, TRANSV., AT RAIL	——		5'-6	
* 5m1-4	WING, VERTICAL	——	32	SHOWN	117
* 5n1	WING, HORIZONTAL	——	24	6'-8	167
5p1	PAVING SUPPORT, TRANSV.	⊏		8'-10	
5p3	PAVING SUPPORT, LONGIT., SIDE "A"	——	6		
5p4	PAVING SUPPORT, LONGIT., SIDE "B"	——	6		
BARRIER RAIL - SEE DESIGN SHEET ???					
REINFORCING STEEL EPOXY COATED TOTAL (LBS)					

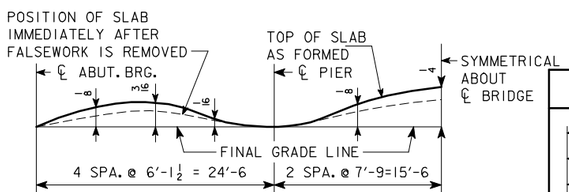

FORM CAMBER DIAGRAM

THIS DIAGRAM SHOWS THE FORM CAMBER REQUIRED TO COMPENSATE FOR THE ANTICIPATED ULTIMATE DEAD LOAD DEFLECTION. THE ABOVE DIMENSIONS DO NOT INCLUDE ANY ALLOWANCE FOR FORM DEFLECTION OR FALSEWORK SETTLEMENT.

BENT BAR DETAILS

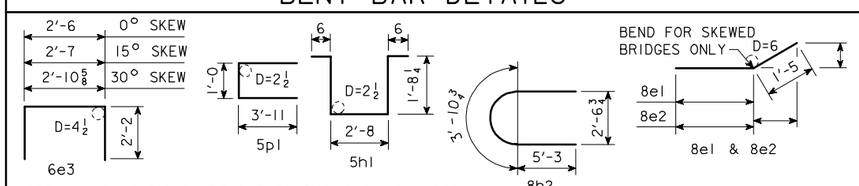

NOTE: ALL DIMENSIONS ARE OUT TO OUT. D=PIN DIAMETER.

ESTIMATED QUANT.-SUPERSTR.

ITEM		UNITS	QUANTITY
STRUCTURAL CONCRETE (BRIDGE)		CU.YDS.	
REINFORCING STEEL, EPOXY COATED		LBS.	
	FURNISH	LIN.FT.	
	DRIVE	LIN.FT.	

STRUCTURAL CONCRETE QUANTITY INCLUDES SLAB WITH INTEGRAL PIER CAPS AND WINGS. FOR TABULATION, SEE "CONCRETE PLACEMENT QUANTITIES-SUPERSTRUCTURE".

IOWA DEPARTMENT OF TRANSPORTATION - HIGHWAY DIVISION

DESIGN SHEET NO. ____ OF ____ FILE NO. _____ DESIGN NO. _____

REVISED 02-05 - PAVING NOTCH BENT BARS AND BAR LIST CHANGED.
ENGLISHCCSBRIDGES.DGN 4429 - 08-12-88

DESIGN TEAM	CONCRETE SLAB, SUPERSTRUCTURE DETAILS-44' ROADWAY-80' BRIDGE	STANDARD SHEET 4429	COUNTY	PROJECT NUMBER	SHEET NUMBER

09-FEB-2006 10:30 ajeffer W:\Projects\0000006002\BRFinal\EnglishCCSBridges.dgn 4429

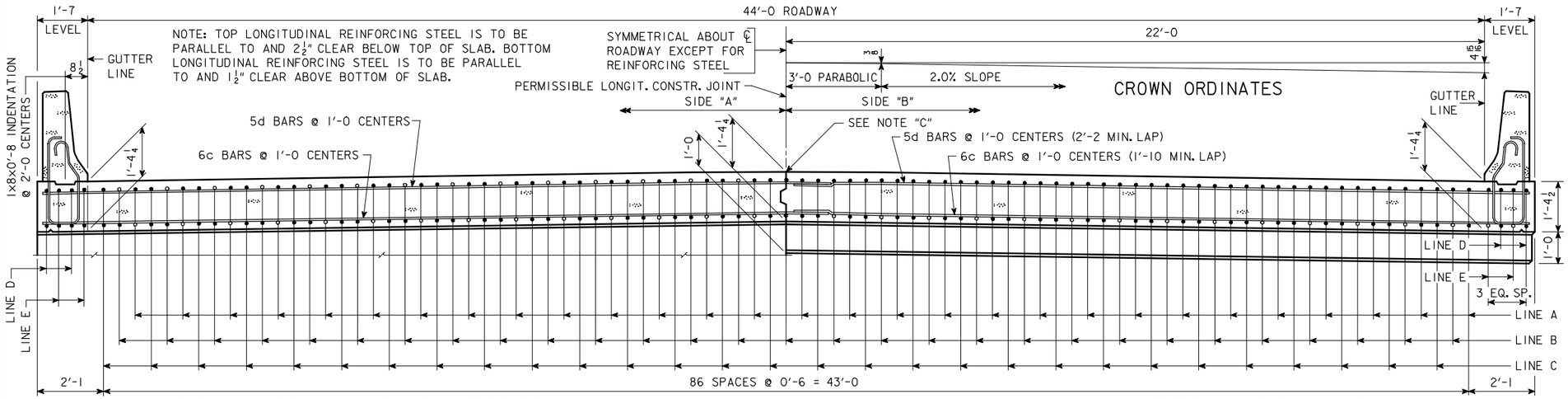

HALF SECTION NEAR ABUTMENT

NOTE "C": IF PERMISSIBLE LONGITUDINAL JOINT IS USED, BARS ON ℄ ROADWAY MAY BE SHIFTED TO CLEAR JOINT BY 1".

SLAB CROSS-SECTIONAL AREA-SIDE "A"	=	32.24 SQ. FT.
SLAB CROSS-SECTIONAL AREA-SIDE "B"	=	32.24 SQ. FT.
BARRIER RAIL CROSS-SECTIONAL AREA-ONE RAIL	=	2.84 SQ. FT.

HALF SECTION NEAR PIER

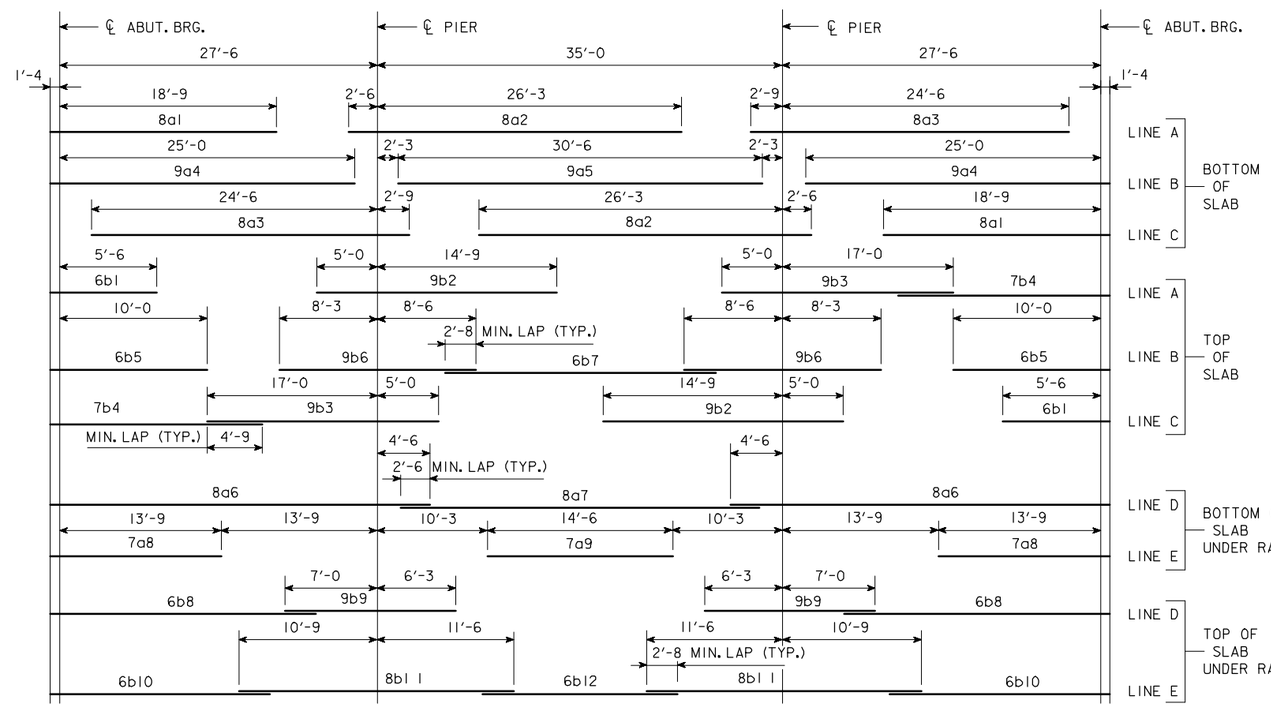

PLACEMENT FOR LONGITUDINAL REINFORCEMENT

* WING REINFORCING MAY BE UNCOATED

EPOXY COATED REINFORCING BAR LIST SUPERSTRUCTURE

BAR	LOCATION	SHAPE	NO.	LENGTH	WEIGHT
8a1	BOTT. OF SLAB, LONGIT.	—	58	20'-1	3110
8a2	BOTT. OF SLAB, LONGIT.	—	58	28'-9	4452
8a3	BOTT. OF SLAB, LONGIT.	—	58	27'-3	4220
9a4	BOTT. OF SLAB, LONGIT.	—	58	26'-4	5193
9a5	BOTT. OF SLAB, LONGIT.	—	29	30'-6	3007
8a6	BOTT. OF SLAB, LONGIT., AT RAIL	—	8	33'-4	712
8a7	BOTT. OF SLAB, LONGIT., AT RAIL	—	4	31'-0	331
7a8	BOTT. OF SLAB, LONGIT., AT RAIL	—	8	15'-1	247
7a9	BOTT. OF SLAB, LONGIT., AT RAIL	—	4	14'-6	119
6b1	TOP OF SLAB, LONGIT.	—	58	6'-10	595
9b2	TOP OF SLAB, LONGIT.	—	58	19'-9	3895
9b3	TOP OF SLAB, LONGIT.	—	58	22'-0	4338
7b4	TOP OF SLAB, LONGIT.	—	58	16'-7	1966
6b5	TOP OF SLAB, LONGIT.	—	58	11'-4	987
9b6	TOP OF SLAB, LONGIT.	—	58	16'-9	3303
6b7	TOP OF SLAB, LONGIT.	—	29	23'-4	1016
6b8	TOP OF SLAB, LONGIT., AT RAIL	—	8	24'-6	294
9b9	TOP OF SLAB, LONGIT., AT RAIL	—	8	13'-3	360
6b10	TOP OF SLAB, LONGIT., AT RAIL	—	8	20'-9	249
8b11	TOP OF SLAB, LONGIT., AT RAIL	—	8	22'-3	475
6b12	TOP OF SLAB, LONGIT., AT RAIL	—	4	17'-4	104
6c1	BOTT. OF SLAB, TRANSV., SIDE "A"	—			
6c2	BOTT. OF SLAB, TRANSV., SIDE "B"	—			
5d1	TOP OF SLAB, TRANSV., SIDE "A"	—			
5d2	TOP OF SLAB, TRANSV., SIDE "B"	—			
8e1	SLAB, TRANSV., AT ABUT., SIDE "A"		20		
8e2	SLAB, TRANSV., AT ABUT., SIDE "B"		20		
6e3	SLAB, HAIRPINS, AT ABUT.	⊓	100		
5h1	PIER CAP HOOPS	⊔		7'-3	
8h2	PIER CAP ENDS	⊂	4	14'-5	154
8h3	PIER CAP, BOTT., LONGIT., SIDE "A"	—	8		
8h4	PIER CAP, BOTT., LONGIT., SIDE "B"	—	8		
8h5	PIER CAP, TOP, LONGIT., SIDE "A"	—	4		
8h6	PIER CAP, TOP, LONGIT., SIDE "B"	—	4		
5j1	TOP OF SLAB, TRANSV., AT RAIL	—		4'-9	
* 5m1-4	WING, VERTICAL	—	32	SHOWN	117
* 5n1	WING, HORIZONTAL	—	24	6'-8	167
5p1	PAVING SUPPORT, TRANSV.	⊏		8'-10	
5p3	PAVING SUPPORT, LONGIT., SIDE "A"	—	6		
5p4	PAVING SUPPORT, LONGIT., SIDE "B"	—	6		
BARRIER RAIL - SEE DESIGN SHEET ???					
REINFORCING STEEL EPOXY COATED TOTAL (LBS)					

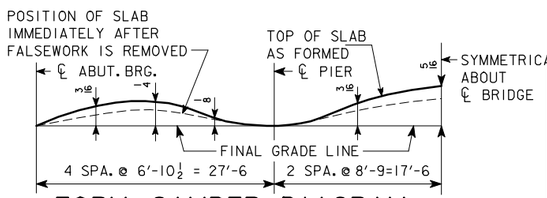

FORM CAMBER DIAGRAM

THIS DIAGRAM SHOWS THE FORM CAMBER REQUIRED TO COMPENSATE FOR THE ANTICIPATED ULTIMATE DEAD LOAD DEFLECTION. THE ABOVE DIMENSIONS DO NOT INCLUDE ANY ALLOWANCE FOR FORM DEFLECTION OR FALSEWORK SETTLEMENT.

BENT BAR DETAILS

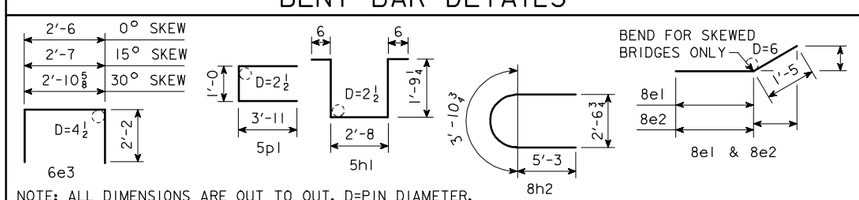

NOTE: ALL DIMENSIONS ARE OUT TO OUT. D=PIN DIAMETER.

ESTIMATED QUANT.-SUPERSTR.

ITEM		UNITS	QUANTITY
STRUCTURAL CONCRETE (BRIDGE)		CU.YDS.	
REINFORCING STEEL, EPOXY COATED		LBS.	
	FURNISH	LIN.FT.	
	DRIVE	LIN.FT.	

STRUCTURAL CONCRETE QUANTITY INCLUDES SLAB WITH INTEGRAL PIER CAPS AND WINGS. FOR TABULATION, SEE "CONCRETE PLACEMENT QUANTITIES-SUPERSTRUCTURE".

IOWA DEPARTMENT OF TRANSPORTATION - HIGHWAY DIVISION

DESIGN SHEET NO. ____ OF ____ FILE NO. _____ DESIGN NO. _____

REVISED 02-05 - PAVING NOTCH BENT BARS AND BAR LIST CHANGED.
ENGLISHCCSBRIDGES.DGN 4430 - 08-12-88

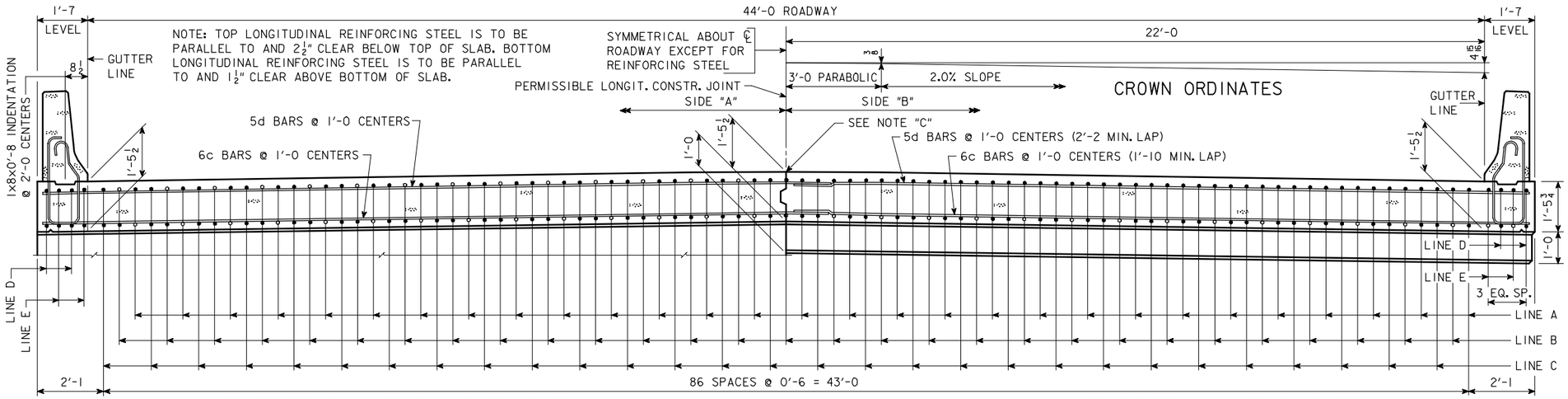

HALF SECTION NEAR ABUTMENT

NOTE "C": IF PERMISSIBLE LONGITUDINAL JOINT IS USED, BARS ON ℄ ROADWAY MAY BE SHIFTED TO CLEAR JOINT BY 1".

SLAB CROSS-SECTIONAL AREA-SIDE "A"	=	34.70 SQ. FT.
SLAB CROSS-SECTIONAL AREA-SIDE "B"	=	34.70 SQ. FT.
BARRIER RAIL CROSS-SECTIONAL AREA-ONE RAIL	=	2.84 SQ. FT.

HALF SECTION NEAR PIER

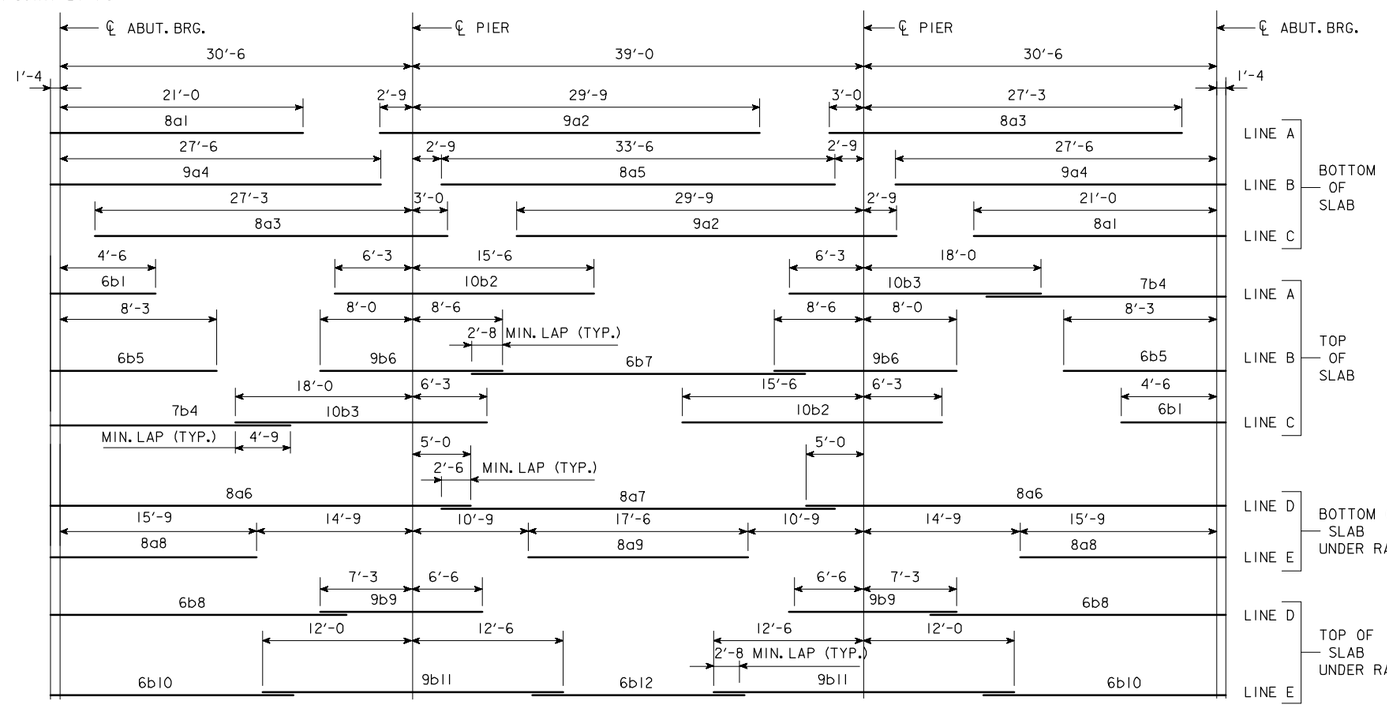

PLACEMENT FOR LONGITUDINAL REINFORCEMENT

* WING REINFORCING MAY BE UNCOATED

EPOXY COATED REINFORCING BAR LIST SUPERSTRUCTURE

BAR	LOCATION	SHAPE	NO.	LENGTH	WEIGHT
8a1	BOTT. OF SLAB, LONGIT.	—	58	22'-4	3458
9a2	BOTT. OF SLAB, LONGIT.	—	58	32'-6	6409
8a3	BOTT. OF SLAB, LONGIT.	—	58	30'-3	4685
9a4	BOTT. OF SLAB, LONGIT.	—	58	28'-10	5686
8a5	BOTT. OF SLAB, LONGIT.	—	29	33'-6	2594
8a6	BOTT. OF SLAB, LONGIT., AT RAIL	—	8	36'-10	787
8a7	BOTT. OF SLAB, LONGIT., AT RAIL	—	4	34'-0	363
8a8	BOTT. OF SLAB, LONGIT., AT RAIL	—	8	17'-1	365
8a9	BOTT. OF SLAB, LONGIT., AT RAIL	—	4	17'-6	187
6b1	TOP OF SLAB, LONGIT.	—	58	5'-10	508
10b2	TOP OF SLAB, LONGIT.	—	58	21'-9	5428
10b3	TOP OF SLAB, LONGIT.	—	58	24'-3	6052
7b4	TOP OF SLAB, LONGIT.	—	58	18'-7	2203
6b5	TOP OF SLAB, LONGIT.	—	58	9'-7	835
9b6	TOP OF SLAB, LONGIT.	—	58	16'-6	3254
6b7	TOP OF SLAB, LONGIT.	—	29	27'-4	1191
6b8	TOP OF SLAB, LONGIT., AT RAIL	—	8	27'-3	327
9b9	TOP OF SLAB, LONGIT., AT RAIL	—	8	13'-9	374
6b10	TOP OF SLAB, LONGIT., AT RAIL	—	8	22'-6	270
9b11	TOP OF SLAB, LONGIT., AT RAIL	—	8	24'-6	666
6b12	TOP OF SLAB, LONGIT., AT RAIL	—	4	19'-4	116
6c1	BOTT. OF SLAB, TRANSV., SIDE "A"	—			
6c2	BOTT. OF SLAB, TRANSV., SIDE "B"	—			
5d1	TOP OF SLAB, TRANSV., SIDE "A"	—			
5d2	TOP OF SLAB, TRANSV., SIDE "B"	—			
8e1	SLAB, TRANSV., AT ABUT., SIDE "A"		20		
8e2	SLAB, TRANSV., AT ABUT., SIDE "B"		20		
6e3	SLAB, HAIRPINS, AT ABUT.	⊓	100		
5h1	PIER CAP HOOPS	⊔		7'-5	
8h2	PIER CAP ENDS	⊂	4	14'-5	154
8h3	PIER CAP, BOTT., LONGIT., SIDE "A"	—	8		
8h4	PIER CAP, BOTT., LONGIT., SIDE "B"	—	8		
8h5	PIER CAP, TOP, LONGIT., SIDE "A"	—	4		
8h6	PIER CAP, TOP, LONGIT., SIDE "B"	—	4		
5j1	TOP OF SLAB, TRANSV., AT RAIL	—		4'-6	
* 5m1-4	WING, VERTICAL	—	32	SHOWN	117
* 5n1	WING, HORIZONTAL	—	24	6'-8	167
5p1	PAVING SUPPORT, TRANSV.	⊏		8'-10	
5p3	PAVING SUPPORT, LONGIT., SIDE "A"	—	6		
5p4	PAVING SUPPORT, LONGIT., SIDE "B"	—	6		
BARRIER RAIL - SEE DESIGN SHEET ???					
REINFORCING STEEL EPOXY COATED TOTAL (LBS)					

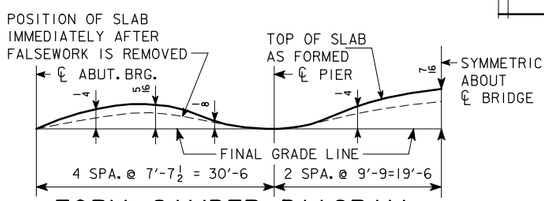

FORM CAMBER DIAGRAM

THIS DIAGRAM SHOWS THE FORM CAMBER REQUIRED TO COMPENSATE FOR THE ANTICIPATED ULTIMATE DEAD LOAD DEFLECTION. THE ABOVE DIMENSIONS DO NOT INCLUDE ANY ALLOWANCE FOR FORM DEFLECTION OR FALSEWORK SETTLEMENT.

BENT BAR DETAILS

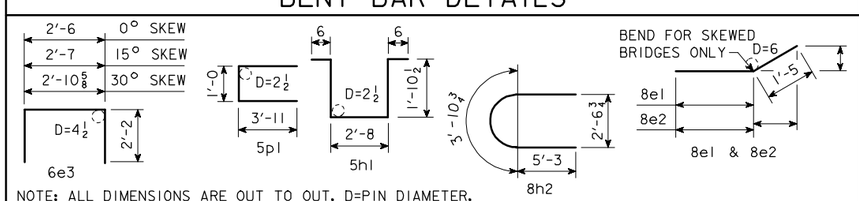

NOTE: ALL DIMENSIONS ARE OUT TO OUT. D=PIN DIAMETER.

ESTIMATED QUANT.-SUPERSTR.

ITEM		UNITS	QUANTITY
STRUCTURAL CONCRETE (BRIDGE)		CU.YDS.	
REINFORCING STEEL, EPOXY COATED		LBS.	
	FURNISH	LIN.FT.	
	DRIVE	LIN.FT.	

STRUCTURAL CONCRETE QUANTITY INCLUDES SLAB WITH INTEGRAL PIER CAPS AND WINGS. FOR TABULATION, SEE "CONCRETE PLACEMENT QUANTITIES-SUPERSTRUCTURE".

IOWA DEPARTMENT OF TRANSPORTATION - HIGHWAY DIVISION

DESIGN SHEET NO. ____ OF ____ FILE NO. _____ DESIGN NO. _____

REVISED 02-05 - PAVING NOTCH BENT BARS AND BAR LIST CHANGED.
ENGLISHCCSBRIDGES.DGN 4431 - 08-12-88

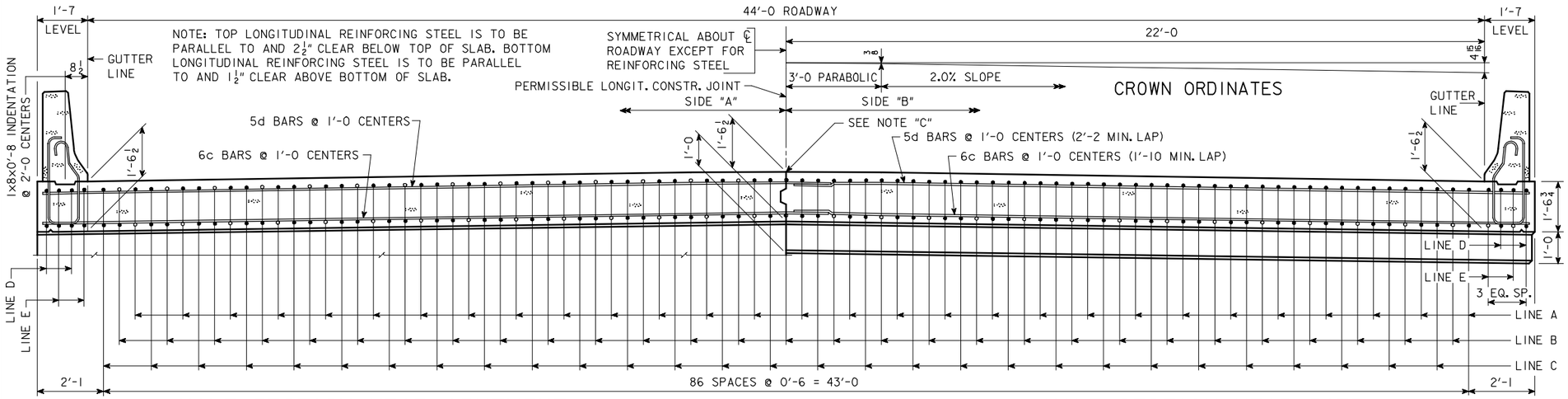

HALF SECTION NEAR ABUTMENT

NOTE "C": IF PERMISSIBLE LONGITUDINAL JOINT IS USED, BARS ON ℄ ROADWAY MAY BE SHIFTED TO CLEAR JOINT BY 1".

SLAB CROSS-SECTIONAL AREA-SIDE "A"	=	36.66	SQ. FT.
SLAB CROSS-SECTIONAL AREA-SIDE "B"	=	36.66	SQ. FT.
BARRIER RAIL CROSS-SECTIONAL AREA-ONE RAIL	=	2.84	SQ. FT.

HALF SECTION NEAR PIER

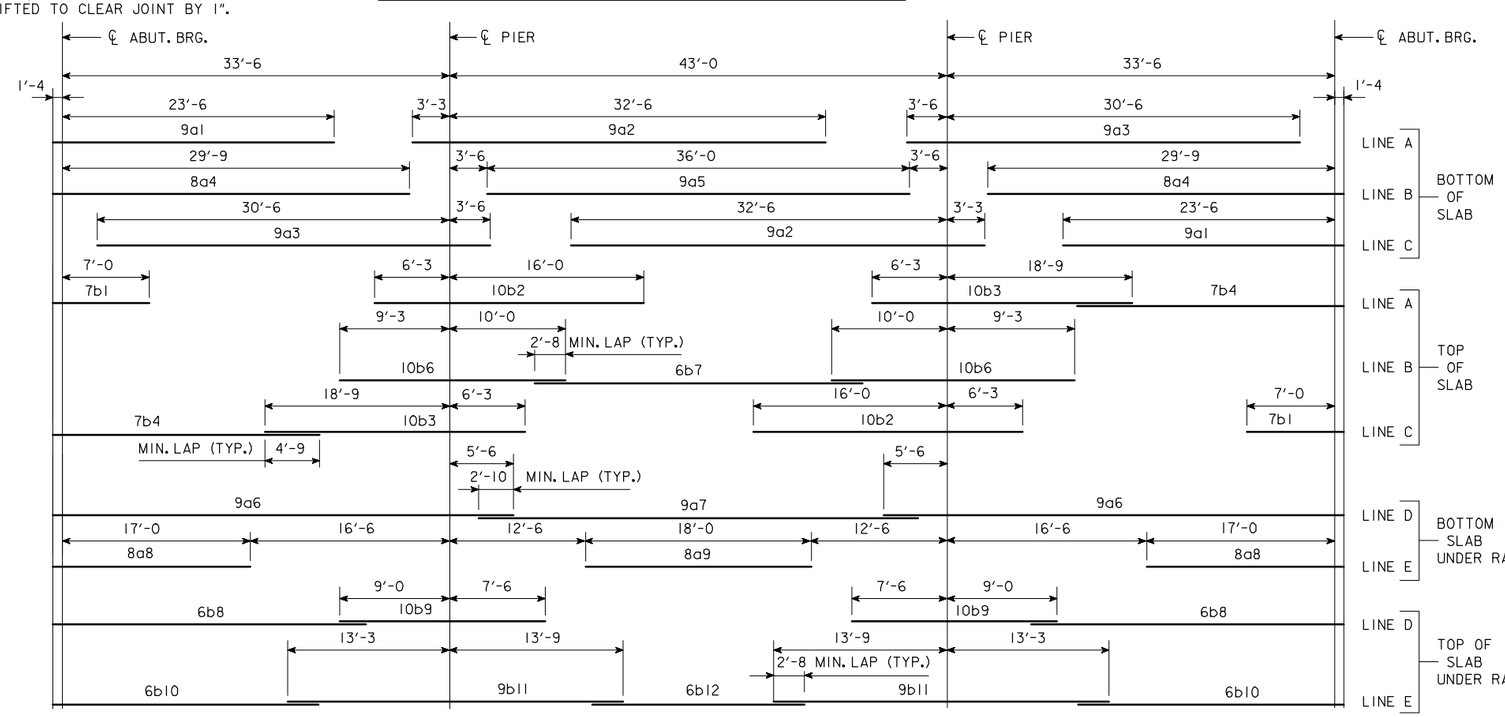

PLACEMENT FOR LONGITUDINAL REINFORCEMENT

* WING REINFORCING MAY BE UNCOATED

EPOXY COATED REINFORCING BAR LIST SUPERSTRUCTURE

BAR	LOCATION	SHAPE	NO.	LENGTH	WEIGHT
9a1	BOTT. OF SLAB, LONGIT.	—	58	24'-10	4897
9a2	BOTT. OF SLAB, LONGIT.	—	58	35'-9	7050
9a3	BOTT. OF SLAB, LONGIT.	—	58	34'-0	6705
8a4	BOTT. OF SLAB, LONGIT.	—	58	31'-1	4814
9a5	BOTT. OF SLAB, LONGIT.	—	29	36'-0	3550
9a6	BOTT. OF SLAB, LONGIT., AT RAIL	—	8	40'-4	1097
9a7	BOTT. OF SLAB, LONGIT., AT RAIL	—	4	37'-8	512
8a8	BOTT. OF SLAB, LONGIT., AT RAIL	—	8	18'-4	392
8a9	BOTT. OF SLAB, LONGIT., AT RAIL	—	4	18'-0	192
7b1	TOP OF SLAB, LONGIT.	—	58	8'-4	988
10b2	TOP OF SLAB, LONGIT.	—	58	22'-3	5553
10b3	TOP OF SLAB, LONGIT.	—	58	25'-0	6239
7b4	TOP OF SLAB, LONGIT.	—	58	20'-10	2470
10b6	TOP OF SLAB, LONGIT.	—	58	19'-3	4804
6b7	TOP OF SLAB, LONGIT.	—	29	28'-4	1234
6b8	TOP OF SLAB, LONGIT., AT RAIL	—	8	28'-6	342
10b9	TOP OF SLAB, LONGIT., AT RAIL	—	8	16'-6	568
6b10	TOP OF SLAB, LONGIT., AT RAIL	—	8	24'-3	291
9b11	TOP OF SLAB, LONGIT., AT RAIL	—	8	27'-0	734
6b12	TOP OF SLAB, LONGIT., AT RAIL	—	4	20'-10	125
6c1	BOTT. OF SLAB, TRANSV., SIDE "A"	—			
6c2	BOTT. OF SLAB, TRANSV., SIDE "B"	—			
5d1	TOP OF SLAB, TRANSV., SIDE "A"	—			
5d2	TOP OF SLAB, TRANSV., SIDE "B"	—			
8e1	SLAB, TRANSV., AT ABUT., SIDE "A"		20		
8e2	SLAB, TRANSV., AT ABUT., SIDE "B"		20		
6e3	SLAB, HAIRPINS, AT ABUT.	⊓	100		
5h1	PIER CAP HOOPS	⊔		7'-7	
8h2	PIER CAP ENDS	⊂	4	14'-5	154
8h3	PIER CAP, BOTT., LONGIT., SIDE "A"	—	8		
8h4	PIER CAP, BOTT., LONGIT., SIDE "B"	—	8		
8h5	PIER CAP, TOP, LONGIT., SIDE "A"	—	4		
8h6	PIER CAP, TOP, LONGIT., SIDE "B"	—	4		
5j1	TOP OF SLAB, TRANSV., AT RAIL	—		4'-0	
* 5m1-4	WING, VERTICAL	—	32	SHOWN	117
* 5n1	WING, HORIZONTAL	—	24	6'-8	167
5p1	PAVING SUPPORT, TRANSV.	⊏		8'-10	
5p3	PAVING SUPPORT, LONGIT., SIDE "A"	—	6		
5p4	PAVING SUPPORT, LONGIT., SIDE "B"	—	6		
	BARRIER RAIL - SEE DESIGN SHEET ???				
	REINFORCING STEEL EPOXY COATED TOTAL (LBS)				

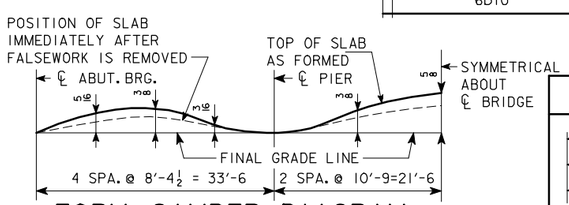

FORM CAMBER DIAGRAM

THIS DIAGRAM SHOWS THE FORM CAMBER REQUIRED TO COMPENSATE FOR THE ANTICIPATED ULTIMATE DEAD LOAD DEFLECTION. THE ABOVE DIMENSIONS DO NOT INCLUDE ANY ALLOWANCE FOR FORM DEFLECTION OR FALSEWORK SETTLEMENT.

BENT BAR DETAILS

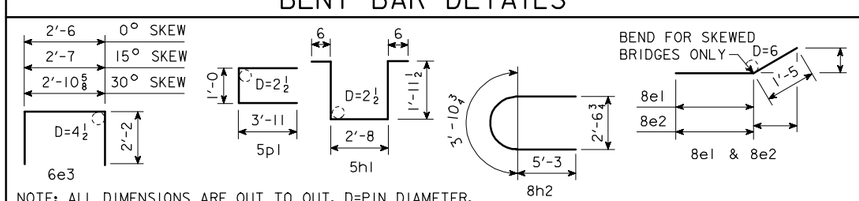

NOTE: ALL DIMENSIONS ARE OUT TO OUT. D=PIN DIAMETER.

ESTIMATED QUANT.-SUPERSTR.

ITEM		UNITS	QUANTITY
STRUCTURAL CONCRETE (BRIDGE)		CU.YDS.	
REINFORCING STEEL, EPOXY COATED		LBS.	
	FURNISH	LIN.FT.	
	DRIVE	LIN.FT.	

STRUCTURAL CONCRETE QUANTITY INCLUDES SLAB WITH INTEGRAL PIER CAPS AND WINGS. FOR TABULATION, SEE "CONCRETE PLACEMENT QUANTITIES-SUPERSTRUCTURE".

IOWA DEPARTMENT OF TRANSPORTATION - HIGHWAY DIVISION

DESIGN SHEET NO. ____ OF ____ FILE NO. _____ DESIGN NO. _____

REVISED 02-05 - PAVING NOTCH BENT BARS AND BAR LIST CHANGED.
ENGLISHCCSBRIDGES.DGN 4432 - 08-12-88

DESIGN TEAM	CONCRETE SLAB, SUPERSTRUCTURE DETAILS-44' ROADWAY-110' BRIDGE	STANDARD SHEET 4432	COUNTY	PROJECT NUMBER	SHEET NUMBER

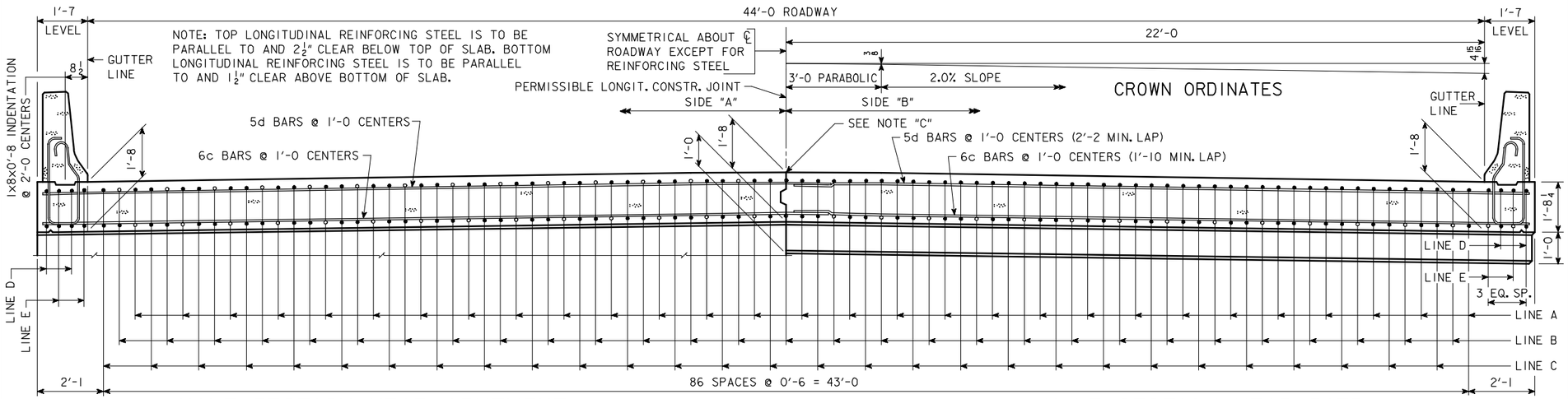

HALF SECTION NEAR ABUTMENT

NOTE "C": IF PERMISSIBLE LONGITUDINAL JOINT IS USED, BARS ON ℄ ROADWAY MAY BE SHIFTED TO CLEAR JOINT BY 1".

SLAB CROSS-SECTIONAL AREA-SIDE "A"	=	39.61	SQ. FT.
SLAB CROSS-SECTIONAL AREA-SIDE "B"	=	39.61	SQ. FT.
BARRIER RAIL CROSS-SECTIONAL AREA-ONE RAIL	=	2.84	SQ. FT.

HALF SECTION NEAR PIER

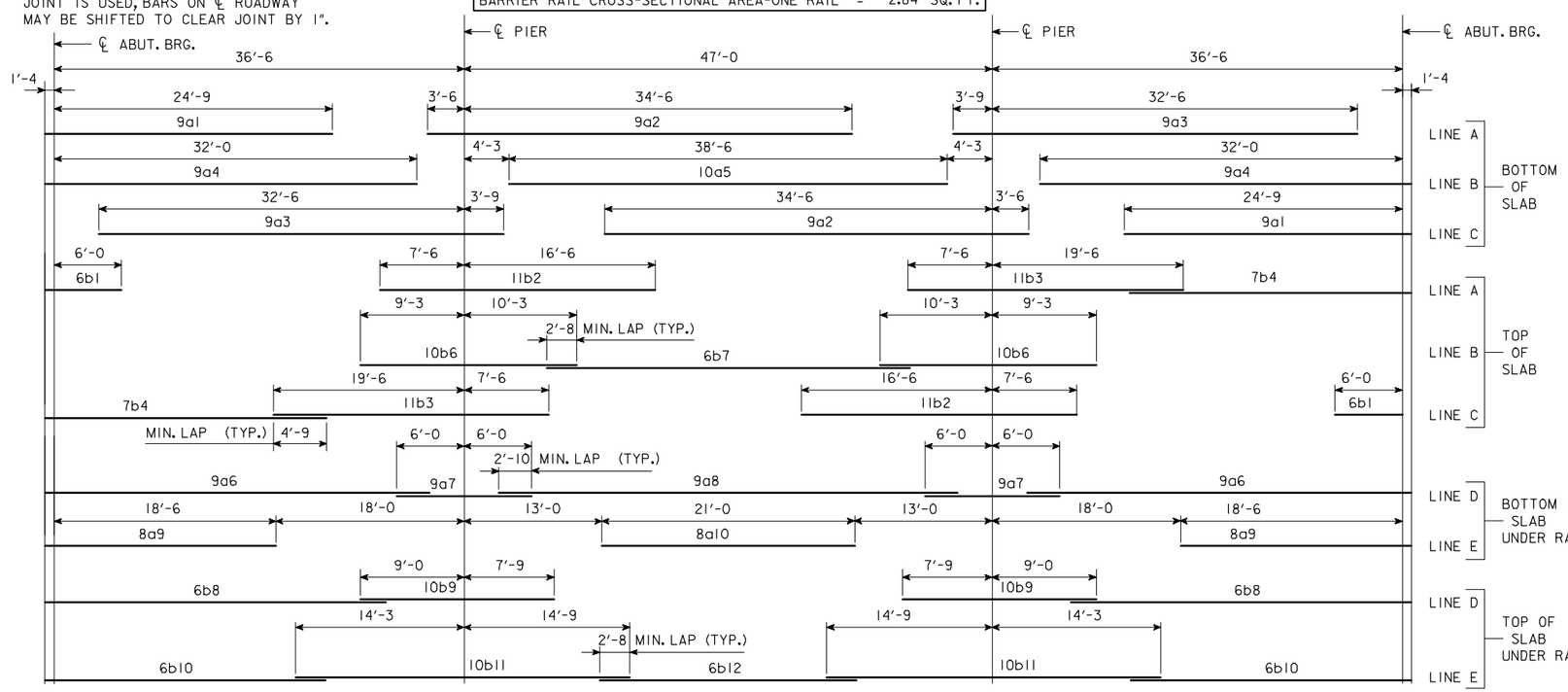

PLACEMENT FOR LONGITUDINAL REINFORCEMENT

* WING REINFORCING MAY BE UNCOATED

EPOXY COATED REINFORCING BAR LIST SUPERSTRUCTURE

	BAR	LOCATION	SHAPE	NO.	LENGTH	WEIGHT
	9a1	BOTT. OF SLAB, LONGIT.	—	58	26'-1	5144
	9a2	BOTT. OF SLAB, LONGIT.	—	58	38'-0	7494
	9a3	BOTT. OF SLAB, LONGIT.	—	58	36'-3	7149
	9a4	BOTT. OF SLAB, LONGIT.	—	58	33'-4	6573
	10a5	BOTT. OF SLAB, LONGIT.	—	29	38'-6	4804
	9a6	BOTT. OF SLAB, LONGIT., AT RAIL	—	8	34'-8	943
	9a7	BOTT. OF SLAB, LONGIT., AT RAIL	—	8	12'-0	326
	9a8	BOTT. OF SLAB, LONGIT., AT RAIL	—	4	40'-8	553
	8a9	BOTT. OF SLAB, LONGIT., AT RAIL	—	8	19'-10	424
	8a10	BOTT. OF SLAB, LONGIT., AT RAIL	—	4	21'-0	
	6b1	TOP OF SLAB, LONGIT.	—	58	7'-4	639
	11b2	TOP OF SLAB, LONGIT.	—	58	24'-0	7396
	11b3	TOP OF SLAB, LONGIT.	—	58	27'-0	8320
	7b4	TOP OF SLAB, LONGIT.	—	58	23'-1	2737
	10b6	TOP OF SLAB, LONGIT.	—	58	19'-6	4867
	6b7	TOP OF SLAB, LONGIT.	—	29	31'-10	1387
	6b8	TOP OF SLAB, LONGIT., AT RAIL	—	8	31'-6	379
	10b9	TOP OF SLAB, LONGIT., AT RAIL	—	8	16'-9	577
	6b10	TOP OF SLAB, LONGIT., AT RAIL	—	8	26'-3	315
	10b11	TOP OF SLAB, LONGIT., AT RAIL	—	8	29'-0	998
	6b12	TOP OF SLAB, LONGIT., AT RAIL	—	4	22'-10	137
	6c1	BOTT. OF SLAB, TRANSV., SIDE "A"	—			
	6c2	BOTT. OF SLAB, TRANSV., SIDE "B"	—			
	5d1	TOP OF SLAB, TRANSV., SIDE "A"	—			
	5d2	TOP OF SLAB, TRANSV., SIDE "B"	—			
	8e1	SLAB, TRANSV., AT ABUT., SIDE "A"		20		
	8e2	SLAB, TRANSV., AT ABUT., SIDE "B"		20		
	6e3	SLAB, HAIRPINS, AT ABUT.	⊓	100		
	5h1	PIER CAP HOOPS	⊔		7'-10	
	8h2	PIER CAP ENDS	⊂	4	14'-5	154
	8h3	PIER CAP, BOTT., LONGIT., SIDE "A"	—	8		
	8h4	PIER CAP, BOTT., LONGIT., SIDE "B"	—	8		
	8h5	PIER CAP, TOP, LONGIT., SIDE "A"	—	4		
	8h6	PIER CAP, TOP, LONGIT., SIDE "B"	—	4		
	5j1	TOP OF SLAB, TRANSV., AT RAIL	—		3'-9	
*	5m1-4	WING, VERTICAL	—	32	SHOWN	117
*	5n1	WING, HORIZONTAL	—	24	6'-8	167
	5p1	PAVING SUPPORT, TRANSV.	⊏		8'-10	
	5p3	PAVING SUPPORT, LONGIT., SIDE "A"	—	6		
	5p4	PAVING SUPPORT, LONGIT., SIDE "B"	—	6		
	BARRIER RAIL - SEE DESIGN SHEET ???					
	REINFORCING STEEL EPOXY COATED TOTAL (LBS)					

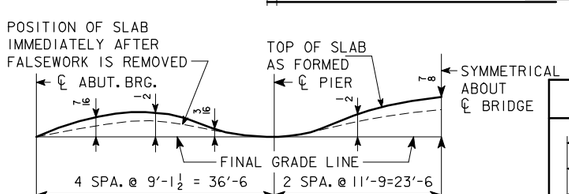

FORM CAMBER DIAGRAM

THIS DIAGRAM SHOWS THE FORM CAMBER REQUIRED TO COMPENSATE FOR THE ANTICIPATED ULTIMATE DEAD LOAD DEFLECTION. THE ABOVE DIMENSIONS DO NOT INCLUDE ANY ALLOWANCE FOR FORM DEFLECTION OR FALSEWORK SETTLEMENT.

BENT BAR DETAILS

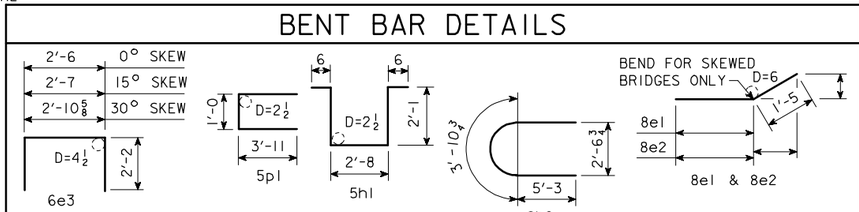

NOTE: ALL DIMENSIONS ARE OUT TO OUT. D=PIN DIAMETER.

ESTIMATED QUANT.-SUPERSTR.

ITEM		UNITS	QUANTITY
STRUCTURAL CONCRETE (BRIDGE)		CU.YDS.	
REINFORCING STEEL, EPOXY COATED		LBS.	
	FURNISH	LIN.FT.	
	DRIVE	LIN.FT.	

STRUCTURAL CONCRETE QUANTITY INCLUDES SLAB WITH INTEGRAL PIER CAPS AND WINGS. FOR TABULATION, SEE "CONCRETE PLACEMENT QUANTITIES-SUPERSTRUCTURE".

IOWA DEPARTMENT OF TRANSPORTATION - HIGHWAY DIVISION

DESIGN SHEET NO. ____ OF ____ FILE NO. _____ DESIGN NO. _____

REVISED 02-05 - PAVING NOTCH BENT BARS AND BAR LIST CHANGED.
ENGLISHCCSBRIDGES.DGN 4433 - 08-12-88

DESIGN TEAM	CONCRETE SLAB, SUPERSTRUCTURE DETAILS-44' ROADWAY-120' BRIDGE	STANDARD SHEET 4433	COUNTY	PROJECT NUMBER	SHEET NUMBER

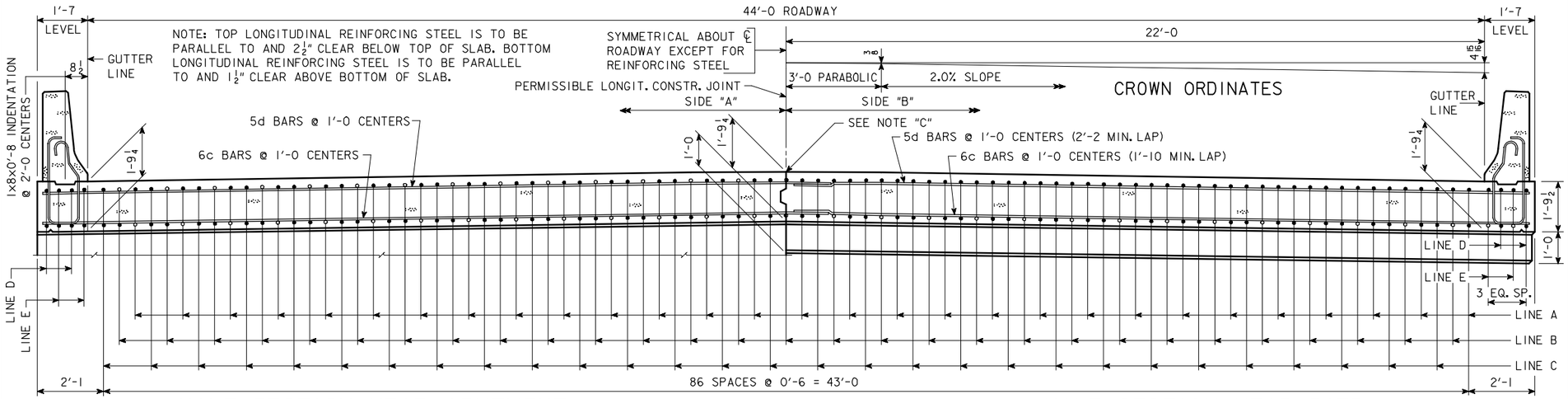

HALF SECTION NEAR ABUTMENT

NOTE "C": IF PERMISSIBLE LONGITUDINAL JOINT IS USED, BARS ON ℄ ROADWAY MAY BE SHIFTED TO CLEAR JOINT BY 1".

SLAB CROSS-SECTIONAL AREA-SIDE "A" =	42.07 SQ. FT.
SLAB CROSS-SECTIONAL AREA-SIDE "B" =	42.07 SQ. FT.
BARRIER RAIL CROSS-SECTIONAL AREA-ONE RAIL =	2.84 SQ. FT.

HALF SECTION NEAR PIER

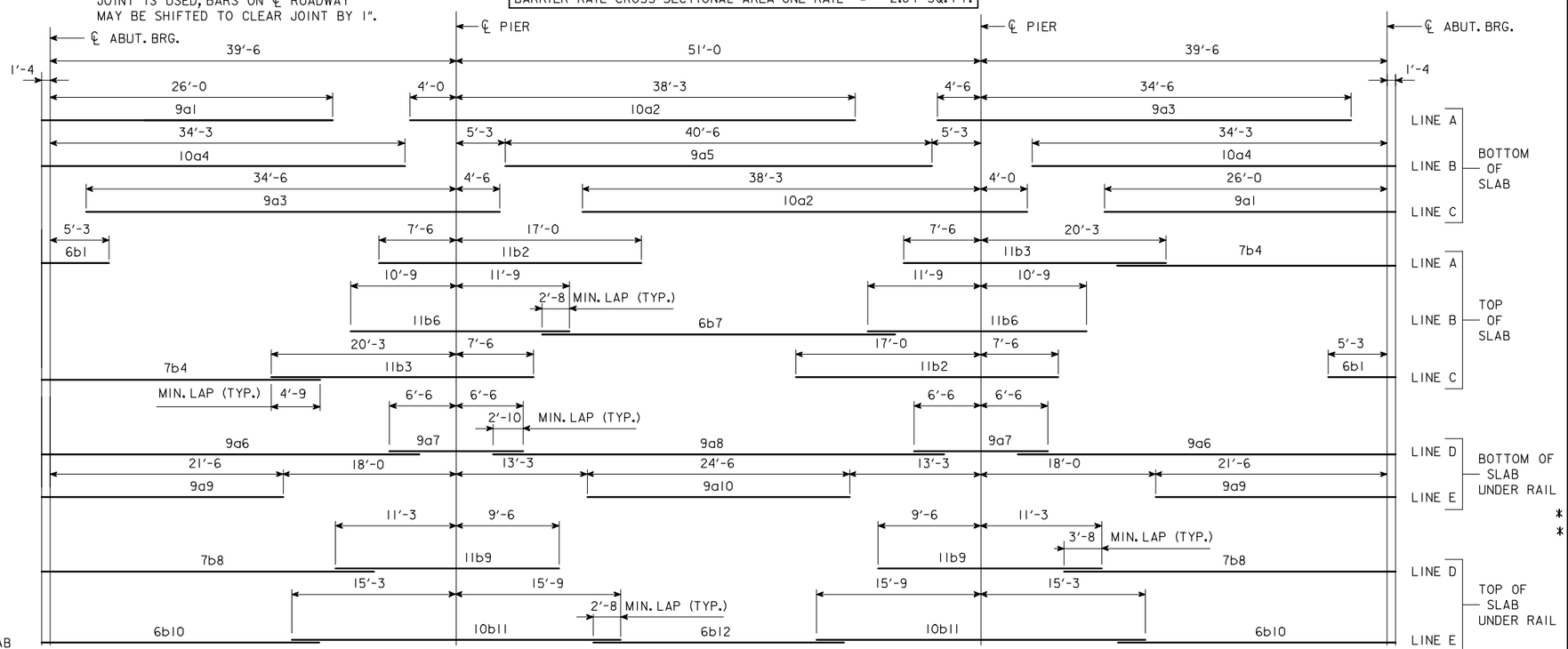

PLACEMENT FOR LONGITUDINAL REINFORCEMENT

* WING REINFORCING MAY BE UNCOATED

EPOXY COATED REINFORCING BAR LIST SUPERSTRUCTURE

BAR	LOCATION	SHAPE	NO.	LENGTH	WEIGHT
9a1	BOTT. OF SLAB, LONGIT.	—	58	27'-4	5390
10a2	BOTT. OF SLAB, LONGIT.	—	58	42'-3	10545
9a3	BOTT. OF SLAB, LONGIT.	—	58	39'-0	7691
10a4	BOTT. OF SLAB, LONGIT.	—	58	35'-7	8881
9a5	BOTT. OF SLAB, LONGIT.	—	29	40'-6	3993
9a6	BOTT. OF SLAB, LONGIT., AT RAIL	—	8	37'-2	1011
9a7	BOTT. OF SLAB, LONGIT., AT RAIL	—	8	13'-0	354
9a8	BOTT. OF SLAB, LONGIT., AT RAIL	—	4	43'-8	594
9a9	BOTT. OF SLAB, LONGIT., AT RAIL	—	8	22'-10	621
9a10	BOTT. OF SLAB, LONGIT., AT RAIL	—	4	24'-6	333
6b1	TOP OF SLAB, LONGIT.	—	58	6'-7	573
11b2	TOP OF SLAB, LONGIT.	—	58	24'-6	7550
11b3	TOP OF SLAB, LONGIT.	—	58	27'-9	8551
7b4	TOP OF SLAB, LONGIT.	—	58	25'-4	3003
11b6	TOP OF SLAB, LONGIT.	—	58	22'-6	6933
6b7	TOP OF SLAB, LONGIT.	—	29	32'-10	1430
7b8	TOP OF SLAB, LONGIT., AT RAIL	—	8	33'-3	544
11b9	TOP OF SLAB, LONGIT., AT RAIL	—	8	20'-9	882
6b10	TOP OF SLAB, LONGIT., AT RAIL	—	8	28'-3	339
10b11	TOP OF SLAB, LONGIT., AT RAIL	—	8	31'-0	1067
6b12	TOP OF SLAB, LONGIT., AT RAIL	—	4	24'-10	149
6c1	BOTT. OF SLAB, TRANSV., SIDE "A"	—			
6c2	BOTT. OF SLAB, TRANSV., SIDE "B"	—			
5d1	TOP OF SLAB, TRANSV., SIDE "A"	—			
5d2	TOP OF SLAB, TRANSV., SIDE "B"	—			
8e1	SLAB, TRANSV., AT ABUT., SIDE "A"		20		
8e2	SLAB, TRANSV., AT ABUT., SIDE "B"		20		
6e3	SLAB, HAIRPINS, AT ABUT.		100		
5h1	PIER CAP HOOPS			8'-1	
8h2	PIER CAP ENDS		4	14'-5	154
8h3	PIER CAP, BOTT., LONGIT., SIDE "A"	—	8		
8h4	PIER CAP, BOTT., LONGIT., SIDE "B"	—	8		
8h5	PIER CAP, TOP, LONGIT., SIDE "A"	—	4		
8h6	PIER CAP, TOP, LONGIT., SIDE "B"	—	4		
5j1	TOP OF SLAB, TRANSV., AT RAIL	—		3'-6	
* 5m1-4	WING, VERTICAL	—	32	SHOWN	117
* 5n1	WING, HORIZONTAL	—	24	6'-8	167
5p1	PAVING SUPPORT, TRANSV.			8'-10	
5p3	PAVING SUPPORT, LONGIT., SIDE "A"	—	6		
5p4	PAVING SUPPORT, LONGIT., SIDE "B"	—	6		
	BARRIER RAIL - SEE DESIGN SHEET ???				
	REINFORCING STEEL EPOXY COATED TOTAL (LBS)				

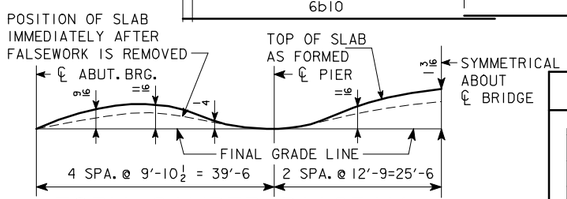

FORM CAMBER DIAGRAM

THIS DIAGRAM SHOWS THE FORM CAMBER REQUIRED TO COMPENSATE FOR THE ANTICIPATED ULTIMATE DEAD LOAD DEFLECTION. THE ABOVE DIMENSIONS DO NOT INCLUDE ANY ALLOWANCE FOR FORM DEFLECTION OR FALSEWORK SETTLEMENT.

BENT BAR DETAILS

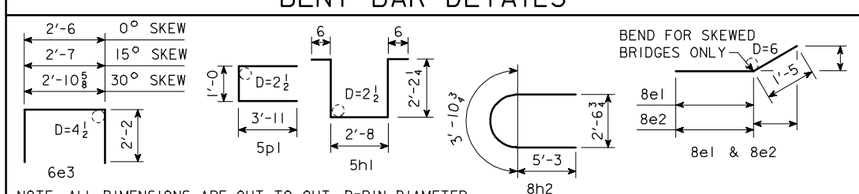

NOTE: ALL DIMENSIONS ARE OUT TO OUT. D=PIN DIAMETER.

ESTIMATED QUANT.-SUPERSTR.

ITEM		UNITS	QUANTITY
STRUCTURAL CONCRETE (BRIDGE)		CU.YDS.	
REINFORCING STEEL, EPOXY COATED		LBS.	
	FURNISH	LIN.FT.	
	DRIVE	LIN.FT.	

STRUCTURAL CONCRETE QUANTITY INCLUDES SLAB WITH INTEGRAL PIER CAPS AND WINGS. FOR TABULATION, SEE "CONCRETE PLACEMENT QUANTITIES-SUPERSTRUCTURE".

IOWA DEPARTMENT OF TRANSPORTATION - HIGHWAY DIVISION

DESIGN SHEET NO. ____ OF ____ FILE NO. _____ DESIGN NO. _____

REVISED 02-05 - PAVING NOTCH BENT BARS AND BAR LIST CHANGED.
ENGLISHCCSBRIDGES.DGN 4434 - 08-12-88

DESIGN TEAM	CONCRETE SLAB, SUPERSTRUCTURE DETAILS-44' ROADWAY-130' BRIDGE	STANDARD SHEET 4434	COUNTY	PROJECT NUMBER	SHEET NUMBER

09-FEB-2006 10:32 ajeffer W:\Projects\0000006002\BRFinal\EnglishCCSBridges.dgn 4434

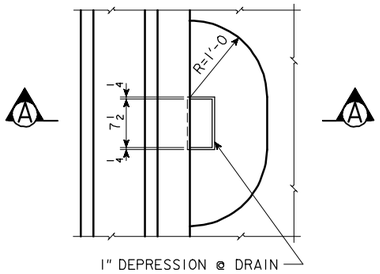

PART PLAN

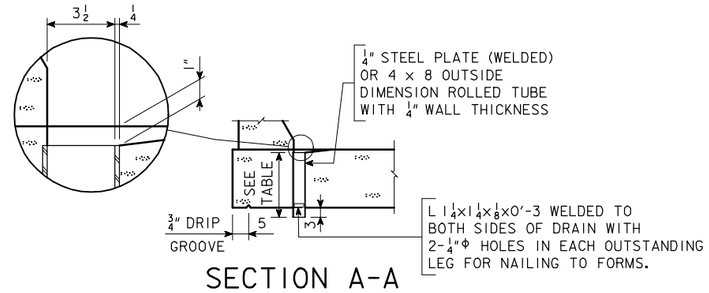

SECTION A-A

DRAIN DETAILS

NOTE: DRAINS ARE TO BE GALVANIZED. ?? DRAINS REQUIRED, SEE "SITUATION PLAN" FOR LOCATION. WEIGHT IS BASED ON WELDED PLATE. COST OF DRAINS TO BE INCLUDED IN PRICE BID FOR CONCRETE.

BRIDGE LENGTH	LENGTH OF DRAIN	WEIGHT LBS./DRAIN
70'-0	1'-4 1/2	27
80'-0	1'-5 1/4	28
90'-0	1'-6 1/4	30
100'-0	1'-7 1/2	32
110'-0	1'-8 1/2	33
120'-0	1'-10	36
130'-0	1'-11 1/4	38

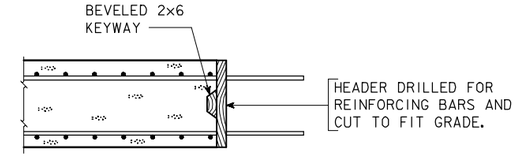

LONGITUDINAL CONSTR. JOINT

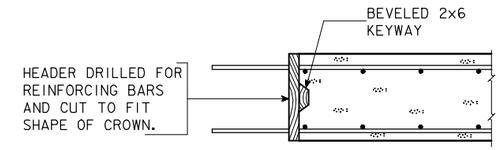

TRANSVERSE CONSTR. JOINT

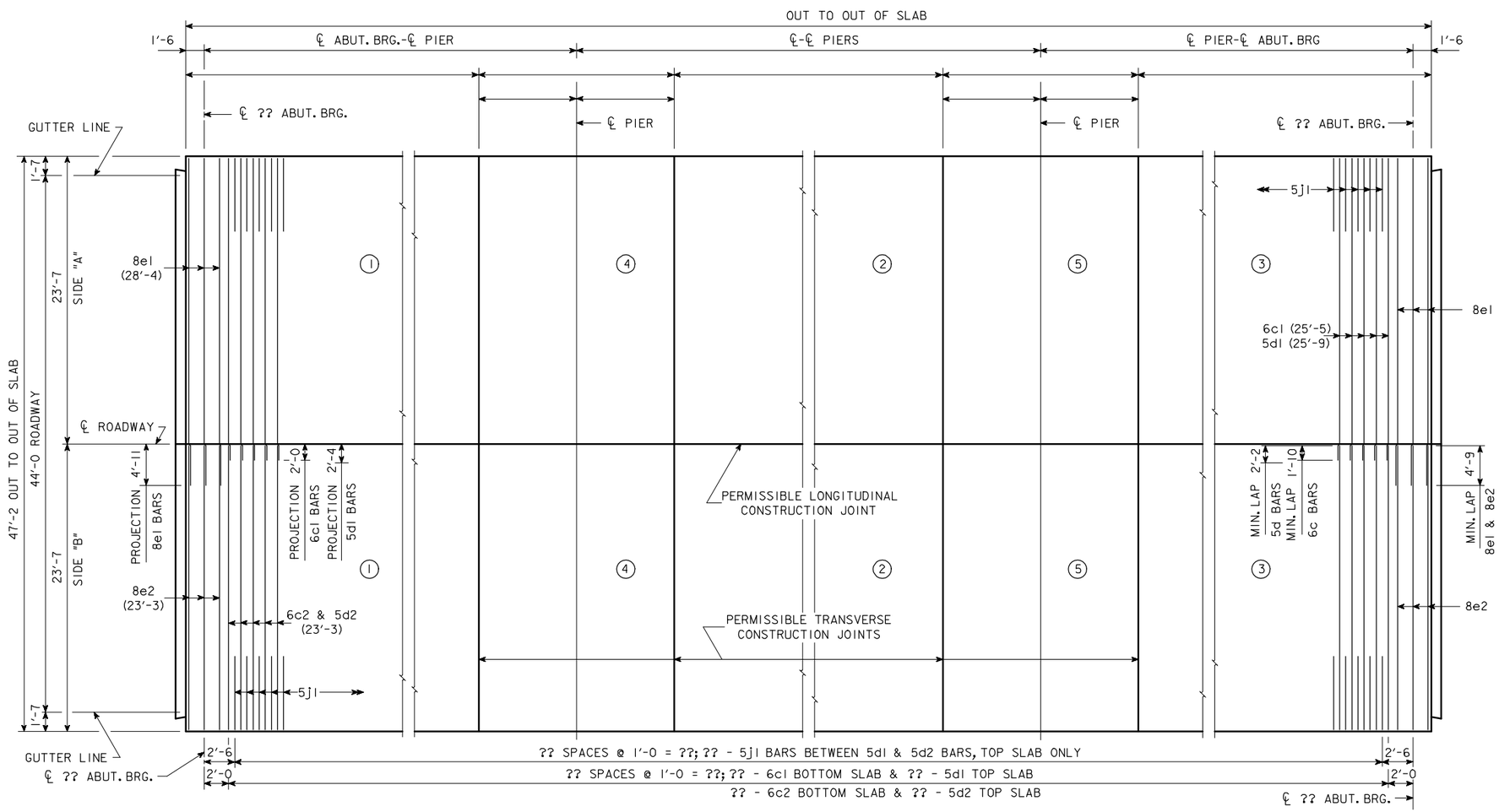

TRANSVERSE REINFORCING STEEL LAYOUT & CONCRETE PLACEMENT DIAGRAM

NOTE: ENCIRCLED NUMBERS DO NOT INDICATE SEQUENCE OF CONCRETE PLACEMENT. (SEE SUPERSTRUCTURE NOTES)

CONCRETE PLACEMENT QUANT.-SUPERSTR.

LOCATION	SIDE "A"	SIDE "B"	TOTAL
SLAB SECTION 1			
SLAB SECTION 2			
SLAB SECTION 3			
SLAB SECTION 4			
SLAB SECTION 5			
WINGS	4 AT 0.65 CU. YDS.		2.6
		TOTAL CU. YDS.	

IOWA DEPARTMENT OF TRANSPORTATION - HIGHWAY DIVISION

DESIGN SHEET NO. ____ OF ____ FILE NO. _____ DESIGN NO. _____

REVISED 07-05 - PAVING NOTCH EXTENDED TO INTERCEPT THE WINGS.
ENGLISHCCSBRIDGES.DGN 4435 - 08-12-88

DESIGN TEAM	CONCRETE SLAB, PLACEMENT DIAGRAM - 44' ROADWAY - 0° SKEW	STANDARD SHEET 4435	COUNTY	PROJECT NUMBER	SHEET NUMBER

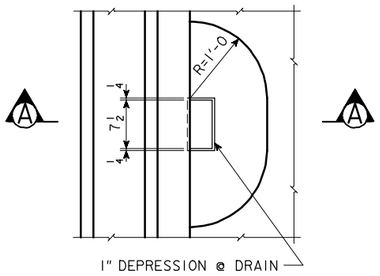

PART PLAN

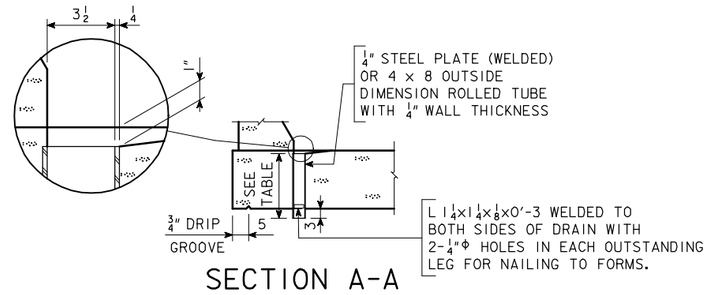

SECTION A-A

DRAIN DETAILS

NOTE: DRAINS ARE TO BE GALVANIZED. ?? DRAINS REQUIRED, SEE "SITUATION PLAN" FOR LOCATION. WEIGHT IS BASED ON WELDED PLATE. COST OF DRAINS TO BE INCLUDED IN PRICE BID FOR CONCRETE.

BRIDGE LENGTH	LENGTH OF DRAIN	WEIGHT LBS./DRAIN
70'-0	1'-4 1/2	27
80'-0	1'-5 1/4	28
90'-0	1'-6 1/4	30
100'-0	1'-7 1/2	32
110'-0	1'-8 1/2	33
120'-0	1'-10	36
130'-0	1'-11 1/4	38

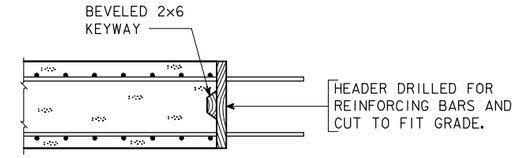

LONGITUDINAL CONSTR. JOINT

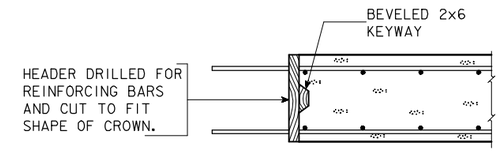

TRANSVERSE CONSTR. JOINT

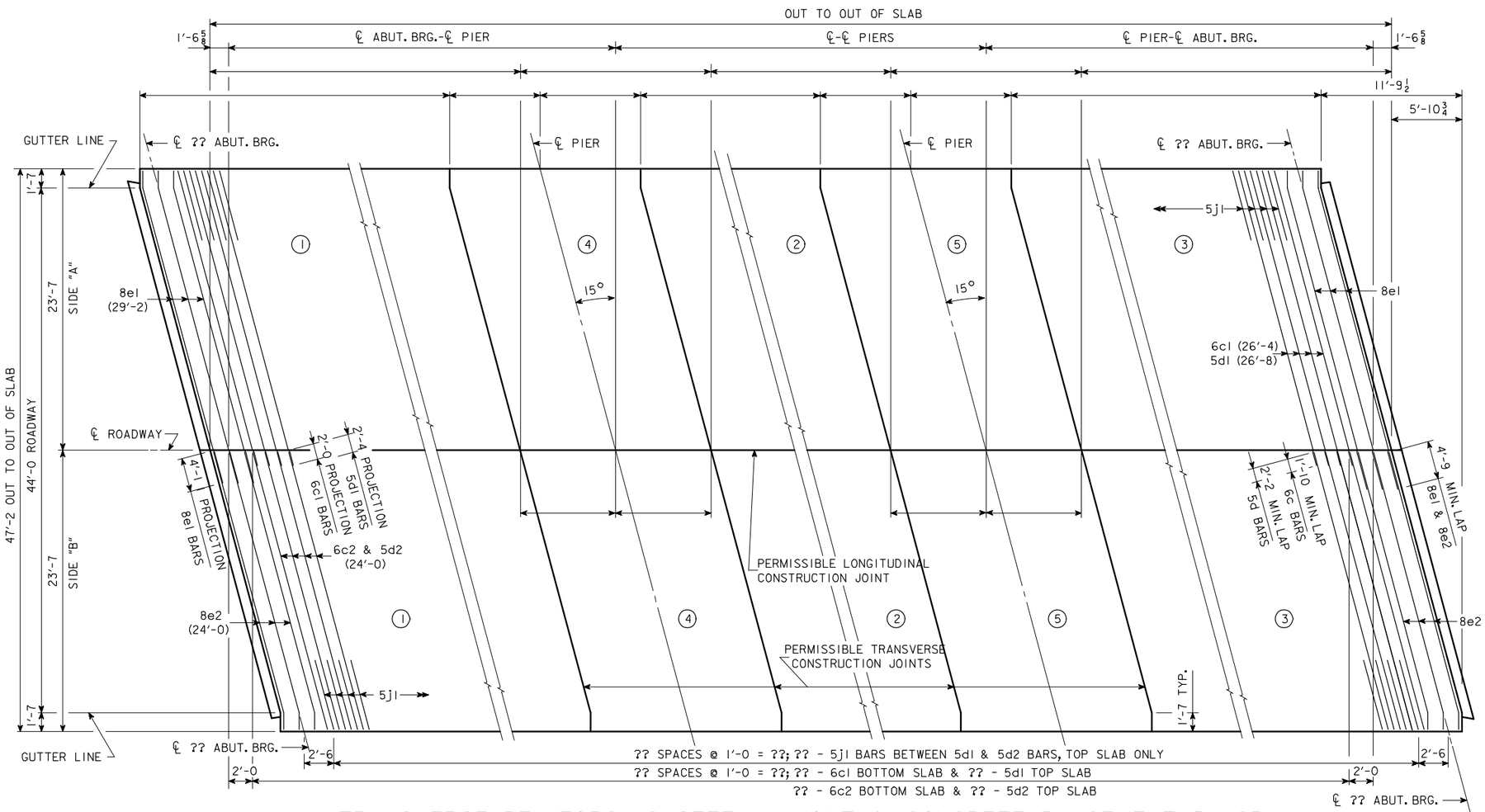

TRANSVERSE REINFORCING STEEL LAYOUT & CONCRETE PLACEMENT DIAGRAM

NOTE: ENCIRCLED NUMBERS DO NOT INDICATE SEQUENCE OF CONCRETE PLACEMENT. (SEE SUPERSTRUCTURE NOTES)

CONCRETE PLACEMENT QUANT.-SUPERSTR.

LOCATION	SIDE "A"	SIDE "B"	TOTAL
SLAB SECTION 1			
SLAB SECTION 2			
SLAB SECTION 3			
SLAB SECTION 4			
SLAB SECTION 5			
WINGS	4 AT 0.65 CU. YDS.		2.6
		TOTAL CU. YDS.	

IOWA DEPARTMENT OF TRANSPORTATION - HIGHWAY DIVISION

DESIGN SHEET NO. ____ OF ____ FILE NO. _____ DESIGN NO. _____

REVISED 07-05 - PAVING NOTCH EXTENDED TO INTERCEPT THE WINGS.
ENGLISHCCSBRIDGES.DGN 4436 - 08-12-88

DESIGN TEAM	CONCRETE SLAB, PLACEMENT DIAGRAM - 44' ROADWAY - 15° SKEW R. A.	STANDARD SHEET 4436	COUNTY	PROJECT NUMBER	SHEET NUMBER

09-FEB-2006 10:33 ajeffer W:\Projects\0000006002\BRFinal\EnglishCCSBridges.dgn 4436

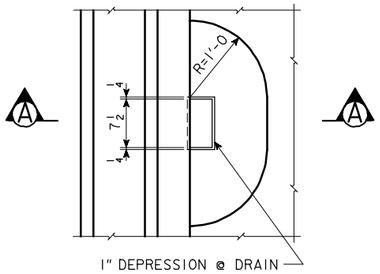

PART PLAN

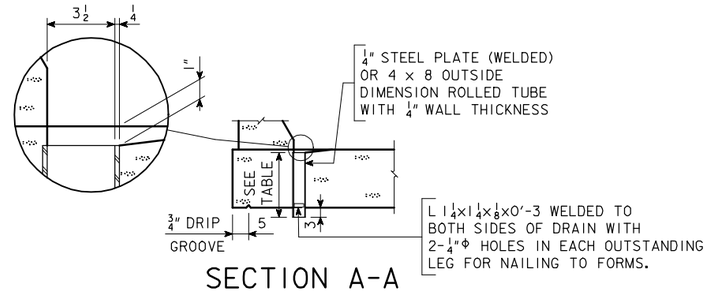

SECTION A-A

DRAIN DETAILS

NOTE: DRAINS ARE TO BE GALVANIZED. ?? DRAINS REQUIRED, SEE "SITUATION PLAN" FOR LOCATION. WEIGHT IS BASED ON WELDED PLATE. COST OF DRAINS TO BE INCLUDED IN PRICE BID FOR CONCRETE.

BRIDGE LENGTH	LENGTH OF DRAIN	WEIGHT LBS./DRAIN
70'-0	1'-4 1/2	27
80'-0	1'-5 1/4	28
90'-0	1'-6 1/4	30
100'-0	1'-7 1/2	32
110'-0	1'-8 1/2	33
120'-0	1'-10	36
130'-0	1'-11 1/4	38

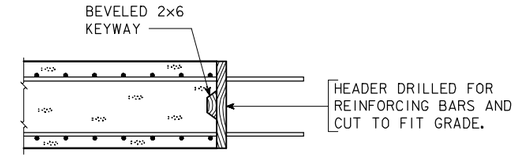

LONGITUDINAL CONSTR. JOINT

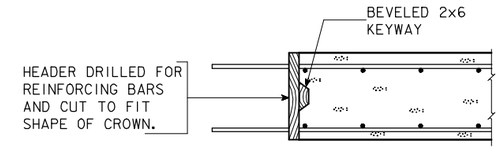

TRANSVERSE CONSTR. JOINT

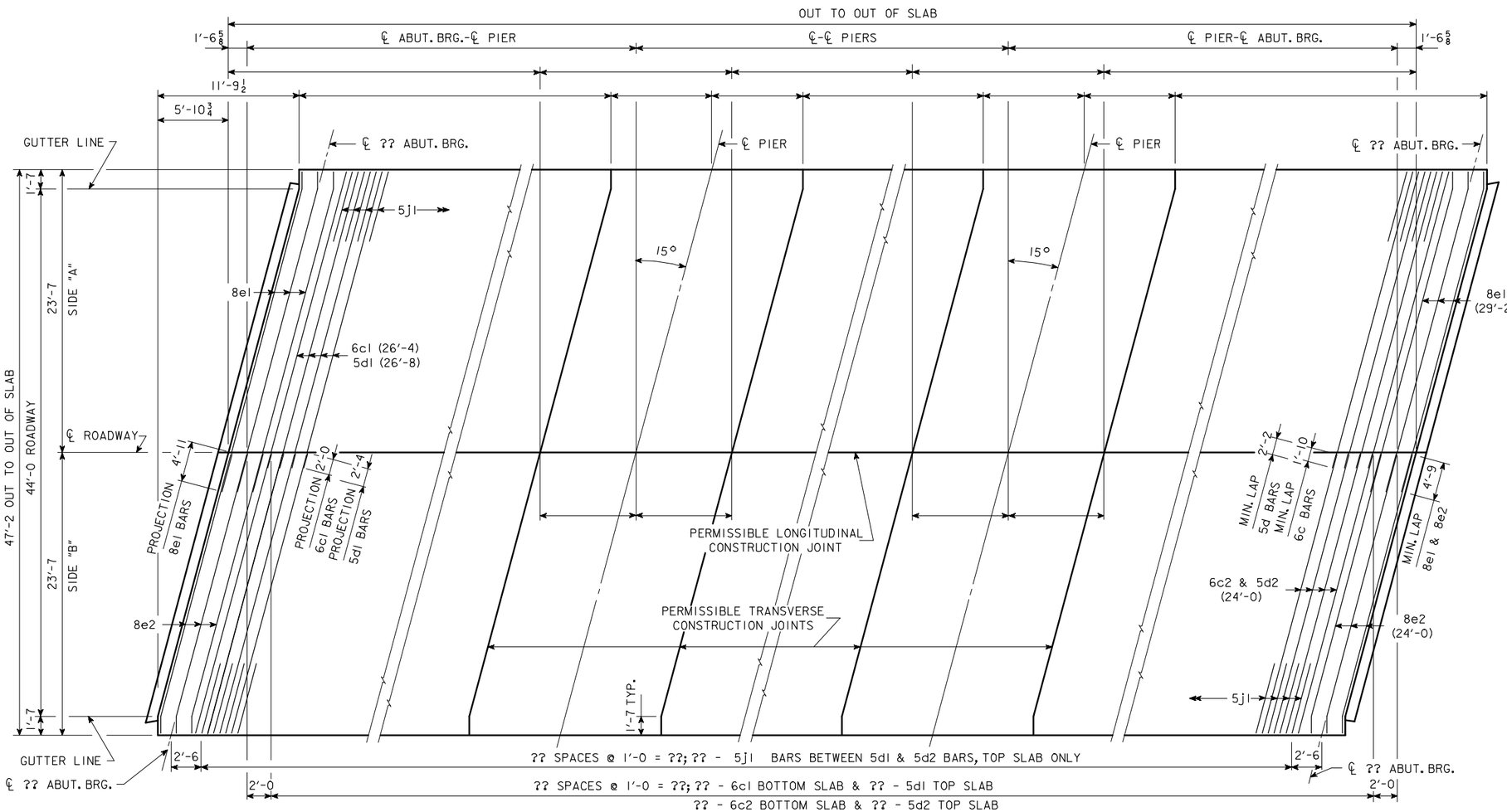

TRANSVERSE REINFORCING STEEL LAYOUT & CONCRETE PLACEMENT DIAGRAM

NOTE: ENCIRCLED NUMBERS DO NOT INDICATE SEQUENCE OF CONCRETE PLACEMENT. (SEE SUPERSTRUCTURE NOTES)

CONCRETE PLACEMENT QUANT.-SUPERSTR.

LOCATION	SIDE "A"	SIDE "B"	TOTAL
SLAB SECTION 1			
SLAB SECTION 2			
SLAB SECTION 3			
SLAB SECTION 4			
SLAB SECTION 5			
WINGS	4 AT 0.65 CU. YDS.		2.6
		TOTAL CU. YDS.	

IOWA DEPARTMENT OF TRANSPORTATION - HIGHWAY DIVISION

DESIGN SHEET NO. ____ OF ____ FILE NO. _____ DESIGN NO. _____

DESIGN TEAM	CONCRETE SLAB, PLACEMENT DIAGRAM - 44' ROADWAY - 15° SKEW L. A.	STANDARD SHEET 4437	COUNTY	PROJECT NUMBER	SHEET NUMBER

REVISED 07-05 - PAVING NOTCH EXTENDED TO INTERCEPT THE WINGS.
ENGLISHCCSBRIDGES.DGN 4437 - 08-12-88

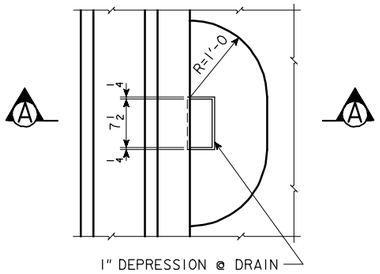

PART PLAN

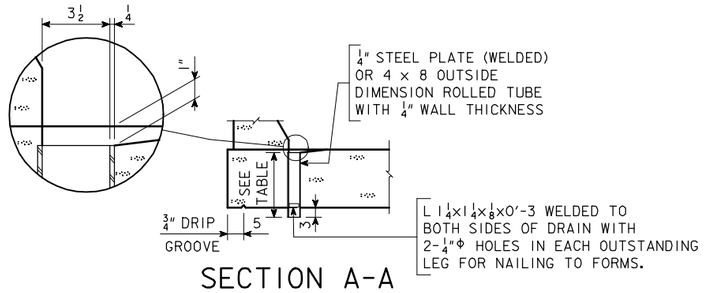

SECTION A-A

DRAIN DETAILS

NOTE: DRAINS ARE TO BE GALVANIZED. ?? DRAINS REQUIRED, SEE "SITUATION PLAN" FOR LOCATION. WEIGHT IS BASED ON WELDED PLATE. COST OF DRAINS TO BE INCLUDED IN PRICE BID FOR CONCRETE.

BRIDGE LENGTH	LENGTH OF DRAIN	WEIGHT LBS./DRAIN
70'-0	1'-4 1/2	27
80'-0	1'-5 1/4	28
90'-0	1'-6 1/4	30
100'-0	1'-7 1/2	32
110'-0	1'-8 1/2	33
120'-0	1'-10	36
130'-0	1'-11 1/4	38

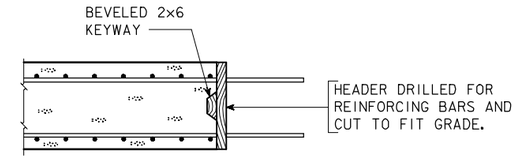

LONGITUDINAL CONSTR. JOINT

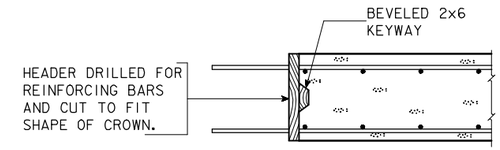

TRANSVERSE CONSTR. JOINT

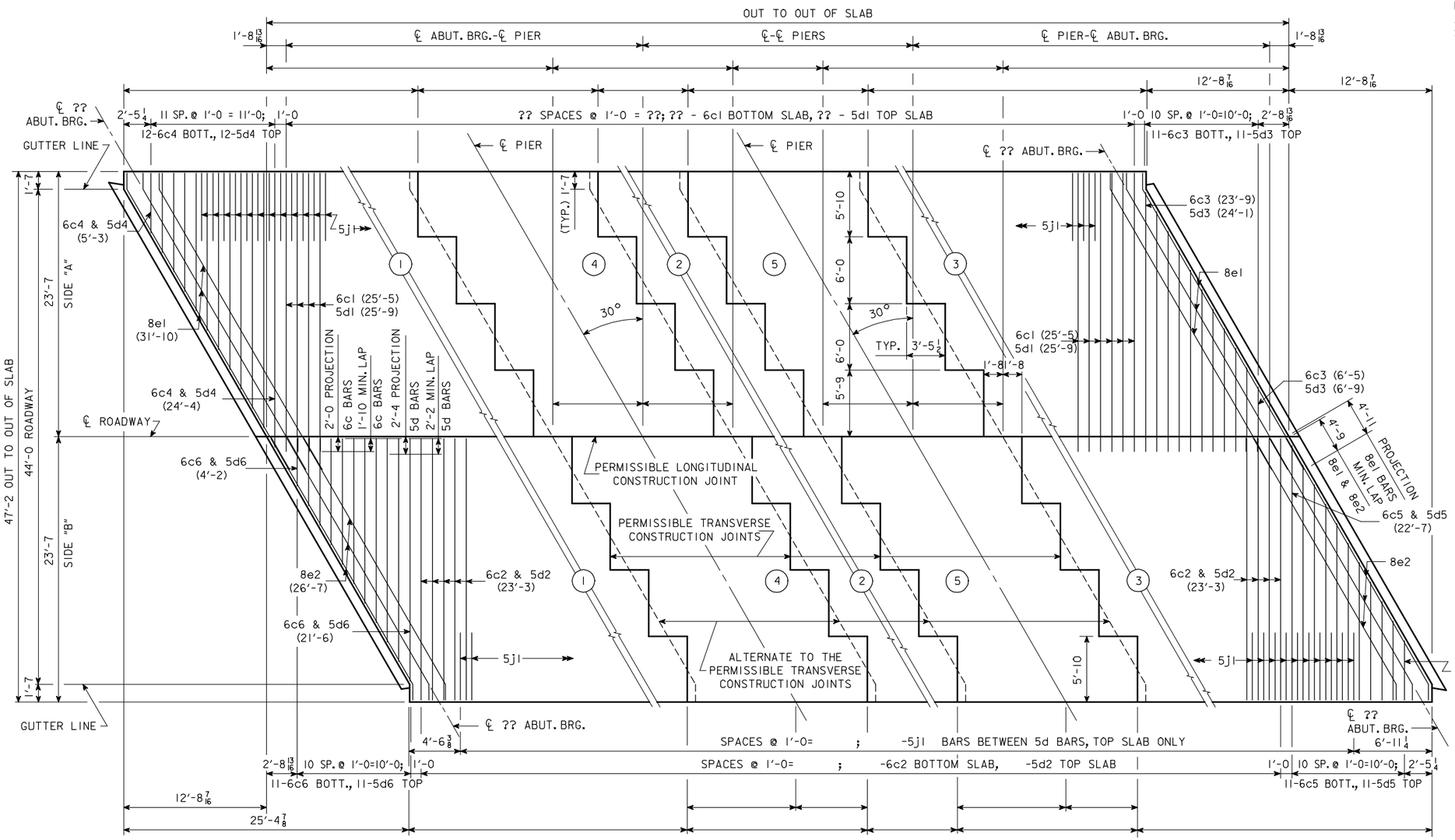

TRANSVERSE REINFORCING STEEL LAYOUT & CONCRETE PLACEMENT DIAGRAM

NOTE: ENCIRCLED NUMBERS DO NOT INDICATE SEQUENCE OF CONCRETE PLACEMENT. (SEE SUPERSTRUCTURE NOTES)

CONCRETE PLACEMENT QUANT.-SUPERSTR.

LOCATION	SIDE "A"	SIDE "B"	TOTAL
SLAB SECTION 1			
SLAB SECTION 2			
SLAB SECTION 3			
SLAB SECTION 4			
SLAB SECTION 5			
WINGS	4 AT 0.65 CU. YDS.		2.6
		TOTAL CU. YDS.	

IOWA DEPARTMENT OF TRANSPORTATION - HIGHWAY DIVISION

DESIGN SHEET NO. ____ OF ____ FILE NO. _____ DESIGN NO. _____

REVISED 07-05 - PAVING NOTCH EXTENDED TO INTERCEPT THE WINGS.
ENGLISHCCSBRIDGES.DGN 4438 - 08-12-88

DESIGN TEAM	CONCRETE SLAB, PLACEMENT DIAGRAM - 44' ROADWAY - 30° SKEW R.A.	STANDARD SHEET 4438	COUNTY	PROJECT NUMBER	SHEET NUMBER

09-FEB-2006 10:33 ajeffer W:\Projects\0000006002\BRFinal\EnglishCCSBridges.dgn 4438

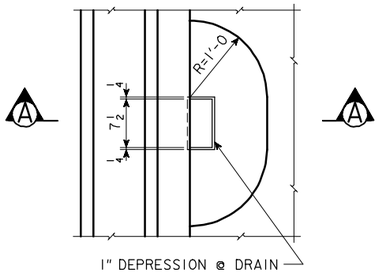

PART PLAN

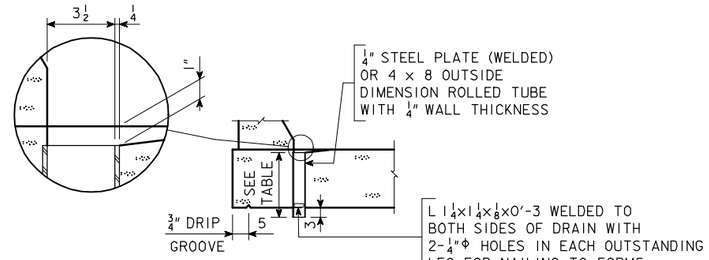

SECTION A-A

DRAIN DETAILS

NOTE: DRAINS ARE TO BE GALVANIZED. ?? DRAINS REQUIRED, SEE "SITUATION PLAN" FOR LOCATION. WEIGHT IS BASED ON WELDED PLATE. COST OF DRAINS TO BE INCLUDED IN PRICE BID FOR CONCRETE.

BRIDGE LENGTH	LENGTH OF DRAIN	WEIGHT LBS./DRAIN
70'-0	1'-4½	27
80'-0	1'-5¼	28
90'-0	1'-6¼	30
100'-0	1'-7½	32
110'-0	1'-8½	33
120'-0	1'-10	36
130'-0	1'-11¼	38

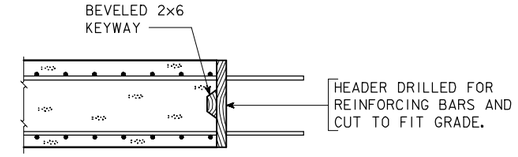

LONGITUDINAL CONSTR. JOINT

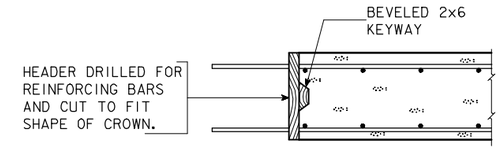

TRANSVERSE CONSTR. JOINT

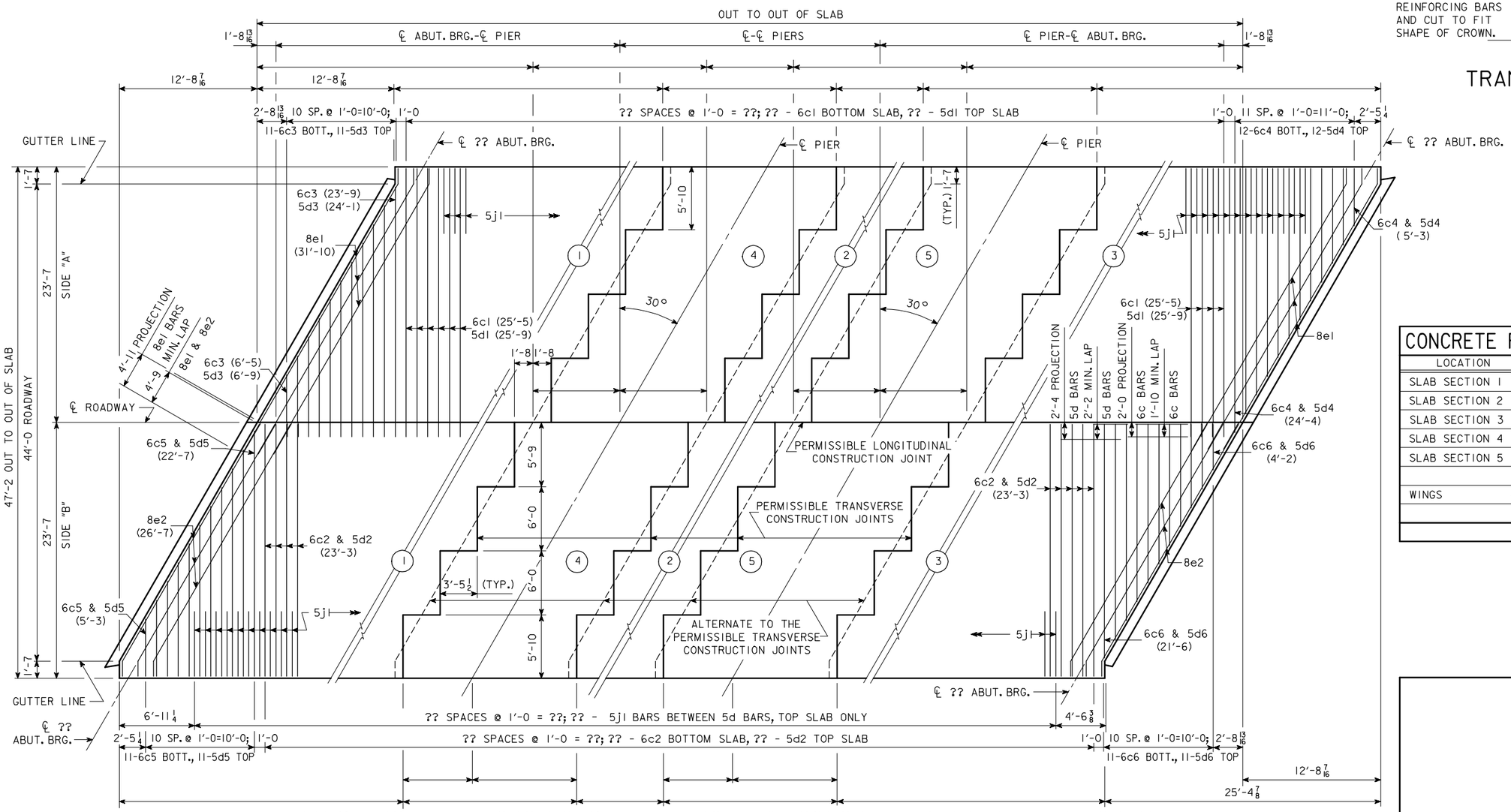

TRANSVERSE REINFORCING STEEL LAYOUT & CONCRETE PLACEMENT DIAGRAM

NOTE: ENCIRCLED NUMBERS DO NOT INDICATE SEQUENCE OF CONCRETE PLACEMENT. (SEE SUPERSTRUCTURE NOTES)

CONCRETE PLACEMENT QUANT.-SUPERSTR.

LOCATION	SIDE "A"	SIDE "B"	TOTAL
SLAB SECTION 1			
SLAB SECTION 2			
SLAB SECTION 3			
SLAB SECTION 4			
SLAB SECTION 5			
WINGS 4 AT 0.65 CU. YDS.			2.6
		TOTAL CU. YDS.	

IOWA DEPARTMENT OF TRANSPORTATION - HIGHWAY DIVISION

DESIGN SHEET NO. ____ OF ____ FILE NO. _____ DESIGN NO. _____

DESIGN TEAM	CONCRETE SLAB, PLACEMENT DIAGRAM - 44' ROADWAY - 30° SKEW L.A.	STANDARD SHEET 4439	COUNTY	PROJECT NUMBER	SHEET NUMBER

REVISED 07-05 - PAVING NOTCH EXTENDED TO INTERCEPT THE WINGS.
ENGLISHCCSBRIDGES.DGN 4439 - 08-12-88

09-FEB-2006 10:34 ajeffer W:\Projects\0000006002\BRFinal\EnglishCCSBridges.dgn 4439

30° SKEW

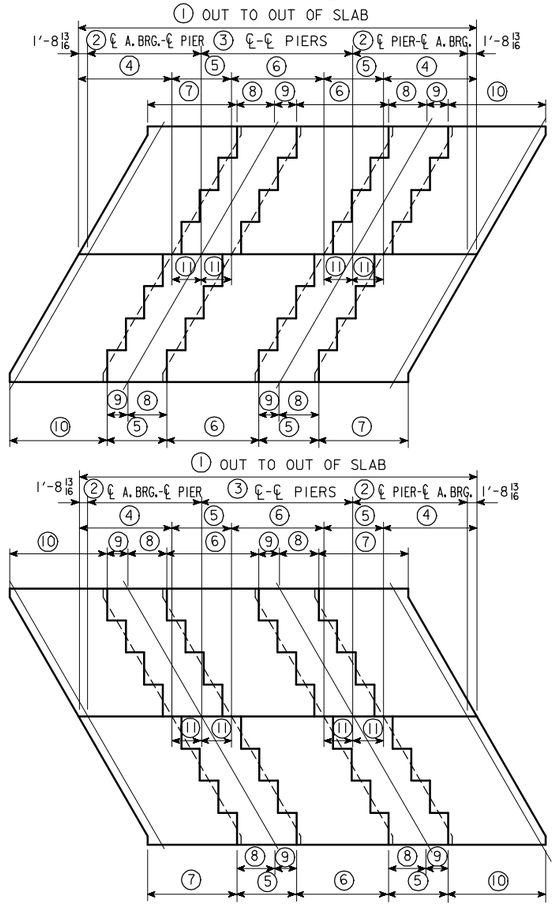

15° SKEW

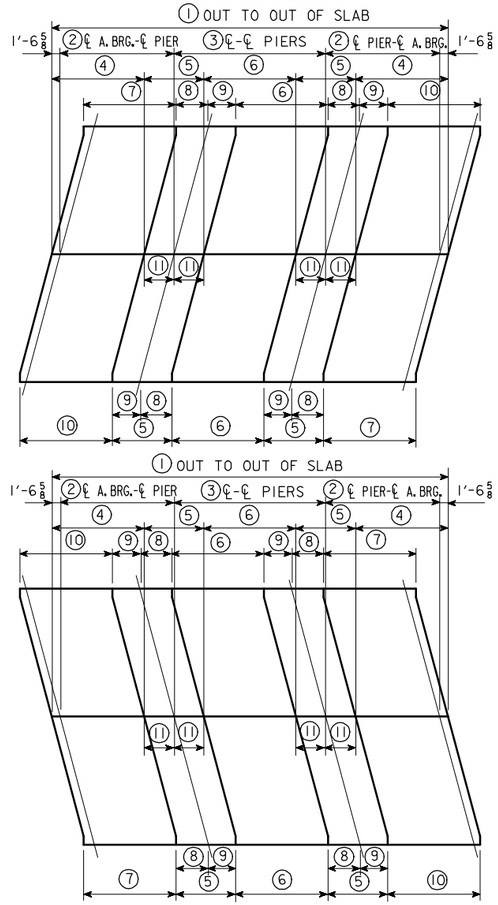

0° SKEW

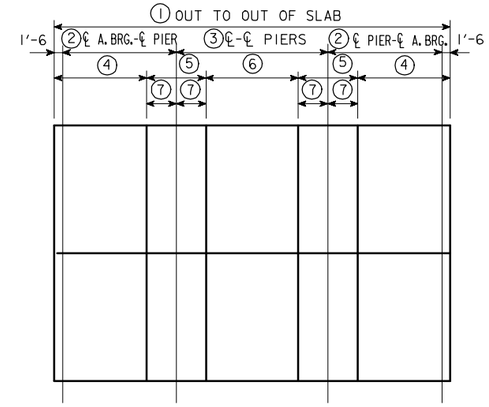

INDEX OF STANDARD SHEETS AVAILABLE

SHEET NO.	SHEET DESCRIPTION
4441	SUBSTRUCTURE DETAILS - 0° SKEW ABUTMENT & PIER PLANS, SUBSTRUCTURE NOTES
4442	SUBSTRUCTURE DETAILS - 15° SKEW R. A. ABUTMENT & PIER PLANS, SUBSTRUCTURE NOTES
4443	SUBSTRUCTURE DETAILS - 15° SKEW L. A. ABUTMENT & PIER PLANS, SUBSTRUCTURE NOTES
4444	SUBSTRUCTURE DETAILS - 30° SKEW R. A. ABUTMENT & PIER PLANS, SUBSTRUCTURE NOTES
4445	SUBSTRUCTURE DETAILS - 30° SKEW L. A. ABUTMENT & PIER PLANS, SUBSTRUCTURE NOTES
4446	LONGITUDINAL SECTION - ALL BRIDGES WING DETAILS, ABUT. REINF. BAR LIST & SUPERSTR. NOTES
4447	BARRIER RAIL DETAILS - ALL BRIDGES
4448	SUPERSTRUCTURE DETAILS - 70'-0 BRIDGE CROSS SECTION, REINF. LAYOUT & BAR LIST
4449	SUPERSTRUCTURE DETAILS - 80'-0 BRIDGE CROSS SECTION, REINF. LAYOUT & BAR LIST
4450	SUPERSTRUCTURE DETAILS - 90'-0 BRIDGE CROSS SECTION, REINF. LAYOUT & BAR LIST
4451	SUPERSTRUCTURE DETAILS - 100'-0 BRIDGE CROSS SECTION, REINF. LAYOUT & BAR LIST
4452	SUPERSTRUCTURE DETAILS - 110'-0 BRIDGE CROSS SECTION, REINF. LAYOUT & BAR LIST
4453	SUPERSTRUCTURE DETAILS - 120'-0 BRIDGE CROSS SECTION, REINF. LAYOUT & BAR LIST
4454	SUPERSTRUCTURE DETAILS - 130'-0 BRIDGE CROSS SECTION, REINF. LAYOUT & BAR LIST
4455	CONCRETE PLACEMENT DIAGRAM - 0° SKEW TRANSVERSE REINFORCING STEEL LAYOUT
4456	CONCRETE PLACEMENT DIAGRAM - 15° SKEW R.A. TRANSVERSE REINFORCING STEEL LAYOUT
4457	CONCRETE PLACEMENT DIAGRAM - 15° SKEW L. A. TRANSVERSE REINFORCING STEEL LAYOUT
4458	CONCRETE PLACEMENT DIAGRAM - 30° SKEW R. A. TRANSVERSE REINFORCING STEEL LAYOUT
4459	CONCRETE PLACEMENT DIAGRAM - 30° SKEW L. A. TRANSVERSE REINFORCING STEEL LAYOUT

DIMENSIONS OF SLAB SECTIONS

BR. \ PT.	①	②	③	④	⑤	⑥	⑦	⑧	⑨	⑩	⑪
70'-0	73'-5 5/8	21'-0	28'-0	17'-2 13/16	11'-0	17'-0	16'-7 1/2	7'-0 1/4	3'-11 3/4	17'-10 1/8	5'-6
80'-0	83'-5 5/8	24'-6	31'-0	20'-2 13/16	12'-0	19'-0	19'-7 1/2	7'-6 1/4	4'-5 3/4	20'-10 1/8	6'-0
90'-0	93'-5 5/8	27'-6	35'-0	22'-2 13/16	14'-0	21'-0	21'-7 1/2	8'-6 1/4	5'-5 3/4	22'-10 1/8	7'-0
100'-0	103'-5 5/8	30'-6	39'-0	24'-2 13/16	16'-0	23'-0	23'-7 1/2	9'-6 1/4	6'-5 3/4	24'-10 1/8	8'-0
110'-0	113'-5 5/8	33'-6	43'-0	26'-2 13/16	18'-0	25'-0	25'-7 1/2	10'-6 1/4	7'-5 3/4	26'-10 1/8	9'-0
120'-0	123'-5 5/8	36'-6	47'-0	28'-2 13/16	20'-0	27'-0	27'-7 1/2	11'-6 1/4	8'-5 3/4	28'-10 1/8	10'-0
130'-0	133'-5 5/8	39'-6	51'-0	30'-2 13/16	22'-0	29'-0	29'-7 1/2	12'-6 1/4	9'-5 3/4	30'-10 1/8	11'-0

DIMENSIONS OF SLAB SECTIONS

BR. \ PT.	①	②	③	④	⑤	⑥	⑦	⑧	⑨	⑩	⑪
70'-0	73'-1 1/4	21'-0	28'-0	17'-0 5/8	11'-0	17'-0	17'-0 5/8	5'-11 1/8	5'-0 7/8	17'-0 5/8	5'-6
80'-0	83'-1 1/4	24'-6	31'-0	20'-0 5/8	12'-0	19'-0	20'-0 5/8	6'-5 1/8	5'-6 7/8	20'-0 5/8	6'-0
90'-0	93'-1 1/4	27'-6	35'-0	22'-0 5/8	14'-0	21'-0	22'-0 5/8	7'-5 1/8	6'-6 7/8	22'-0 5/8	7'-0
100'-0	103'-1 1/4	30'-6	39'-0	24'-0 5/8	16'-0	23'-0	24'-0 5/8	8'-5 1/8	7'-6 7/8	24'-0 5/8	8'-0
110'-0	113'-1 1/4	33'-6	43'-0	26'-0 5/8	18'-0	25'-0	26'-0 5/8	9'-5 1/8	8'-6 7/8	26'-0 5/8	9'-0
120'-0	123'-1 1/4	36'-6	47'-0	28'-0 5/8	20'-0	27'-0	28'-0 5/8	10'-5 1/8	9'-6 7/8	28'-0 5/8	10'-0
130'-0	133'-1 1/4	39'-6	51'-0	30'-0 5/8	22'-0	29'-0	30'-0 5/8	11'-5 1/8	10'-6 7/8	30'-0 5/8	11'-0

DIMENSIONS OF SLAB SECTIONS

BR. \ PT.	①	②	③	④	⑤	⑥	⑦
70'-0	73'-0	21'-0	28'-0	17'-0	11'-0	17'-0	5'-6
80'-0	83'-0	24'-6	31'-0	20'-0	12'-0	19'-0	6'-0
90'-0	93'-0	27'-6	35'-0	22'-0	14'-0	21'-0	7'-0
100'-0	103'-0	30'-6	39'-0	24'-0	16'-0	23'-0	8'-0
110'-0	113'-0	33'-6	43'-0	26'-0	18'-0	25'-0	9'-0
120'-0	123'-0	36'-6	47'-0	28'-0	20'-0	27'-0	10'-0
130'-0	133'-0	39'-6	51'-0	30'-0	22'-0	29'-0	11'-0

ABUT. AND PIER REACTIONS FOR SLAB BRIDGES

BRIDGE	ABUTMENT REACTION (KIPS)			PIER REACTION (KIPS)			
	[1] DEAD LOAD	LIVE LOAD	TOTAL	[2] DEAD LOAD	LIVE LOAD	IMPACT	TOTAL
70'-0	201.5	107.7	309.2	280.7	155.1	46.5	482.3
80'-0	218.6	115.6	334.2	326.2	161.9	48.6	536.7
90'-0	233.7	121.1	354.8	383.6	168.2	50.5	602.3
100'-0	251.3	126.8	378.1	450.4	172.4	51.7	674.5
110'-0	269.0	131.9	400.9	516.8	175.9	52.8	745.5
120'-0	290.9	136.4	427.3	600.0	178.4	53.5	831.9
130'-0	312.9	140.3	453.2	682.6	180.5	53.1	916.2

DESIGN CRITERIA:

THE 3-SPAN CONTINUOUS CONCRETE SLAB STANDARDS FOR 44' ROADWAY ARE DESIGNED IN ACCORDANCE WITH THE AASHTO STANDARD SPECIFICATIONS FOR HIGHWAY BRIDGES, SERIES OF 1989, USING THE SERVICE LOAD DESIGN METHOD (ALLOWABLE STRESS DESIGN).

CONCRETE f'c = 3500 psi

REINFORCING STEEL fs = 24,000 psi (GRADE 60)

n=9 FOR TENSION STEEL

2n=18 FOR COMPRESSION STEEL

HS20-44 LOADING OR AN ALTERNATE MILITARY LOADING OF TWO AXLES FOUR FEET APART (24,000 LBS. EACH AXLE) PLUS 20 LBS. PER SQ. FT. FOR FUTURE WEARING SURFACE.

END SPAN LENGTH IS USED FOR "S" IN LIVE LOAD DISTRIBUTION FORMULA (E=4+0.06S).

THE TOP 1/2" OF THE SLAB IS CONSIDERED TO BE AN INTEGRAL WEARING SURFACE. THE DEAD LOAD OF THE BARRIER RAIL IS SPREAD OVER THE ENTIRE SLAB.

THE DESIGN OF THE EDGE BEAM INCLUDES 25% OF THE RAIL WEIGHT TO BE CARRIED BY THE EDGE BEAM.

SLAB MOMENTS DUE TO PASSIVE EARTH PRESSURE ON THE ABUTMENTS ARE CONSIDERED IN GROUP IV LOADING @ 125%.

IF ROCK IS ENCOUNTERED LESS THAN 12' BELOW BOTTOM OF ABUTMENT FOOTING, SPECIAL ANALYSIS MAY BE REQUIRED.

THESE STANDARDS ARE NOT DESIGNED SO THAT ADDITIONAL INTERIOR SPANS MAY BE ADDED WITHOUT CAUSING SOME OVERSTRESSES.

[1] INCLUDES WEIGHT OF ABUTMENT FOOTINGS, BARRIER RAIL, FUTURE WEARING SURFACE, AND WINGS, AND IS BASED ON 30° SKEW.

[2] INCLUDES WEIGHT OF PIER CAP AND IS BASED ON 30° SKEW.

DATA SHEET FOR 40'-0 ROADWAY SLAB BRIDGES

IOWA DEPARTMENT OF TRANSPORTATION - HIGHWAY DIVISION

REVISED: 05-01-91, EPOXY BAR DEVELOPMENT LENGTHS AND SPLICE LENGTHS CHANGED, DEVICE: ZHA1:E200,5J ARCH. TAPE NO. 000016 DATE 05-28-91
ENGLISHCCSBRIDGES.DGN 4440 - 08-12-88

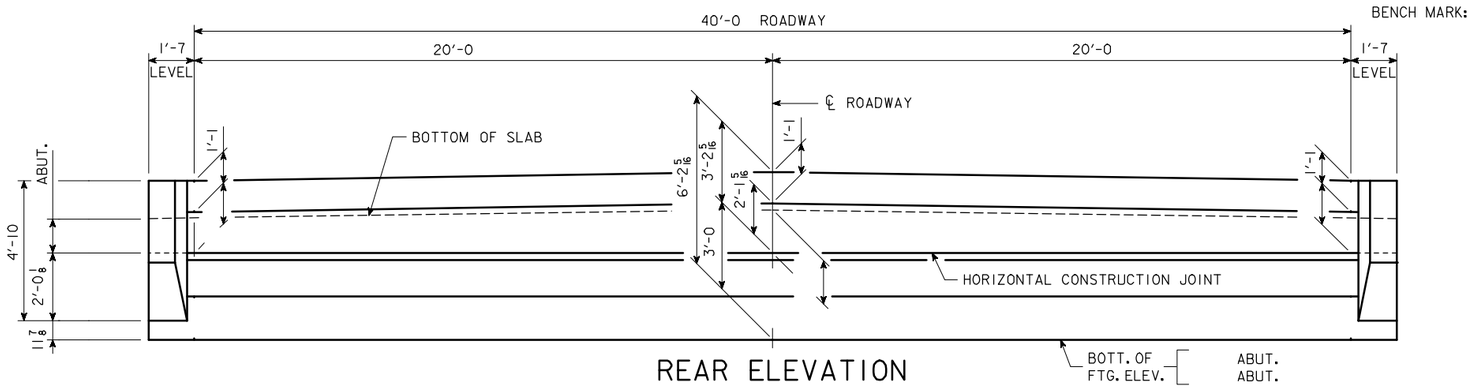

REAR ELEVATION

SUBSTRUCTURE NOTES:

MINIMUM CLEAR DISTANCE FROM FACE OF CONCRETE TO NEAR REINFORCING BAR IS TO BE 2" UNLESS OTHERWISE NOTED OR SHOWN.

THE TRANSVERSE REBARS ARE DETAILED WITH A SPLICE LAP. AT THE CONTRACTOR'S OPTION, THIS LAP MAY BE ELIMINATED BY FURNISHING FULL LENGTH BARS WITH NO REDUCTION IN PAY WEIGHT FOR SAME.

THE DESIGN BEARING FOR THE ABUTMENT PILES IS ?? TONS.

THE DESIGN BEARING FOR THE PIER PILES IS ?? TONS.

NOTE: BARRIER RAIL NOT SHOWN IN DETAILS.

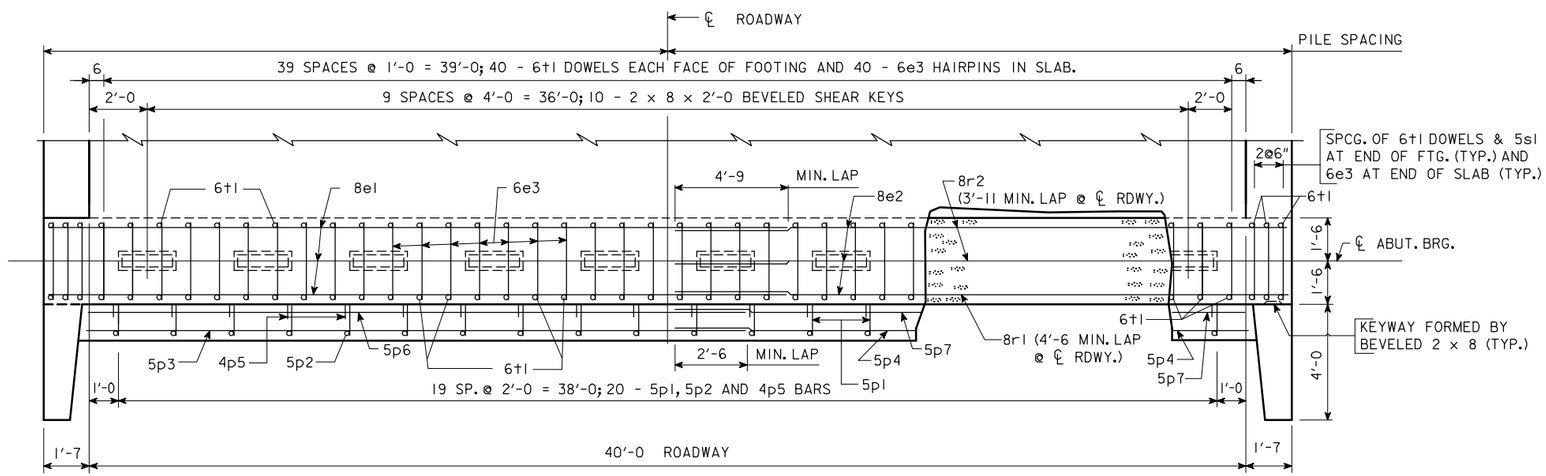

PLAN AT ABUTMENT

NOTE: WING REINFORCING AND RAIL NOT SHOWN.

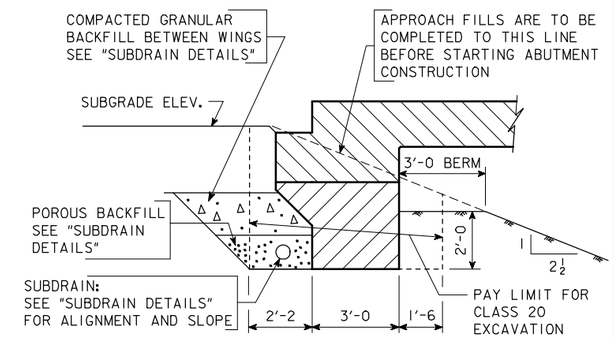

ABUTMENT EXCAVATION DETAILS

SECTION NORMAL TO ℄ ABUT. BRG.

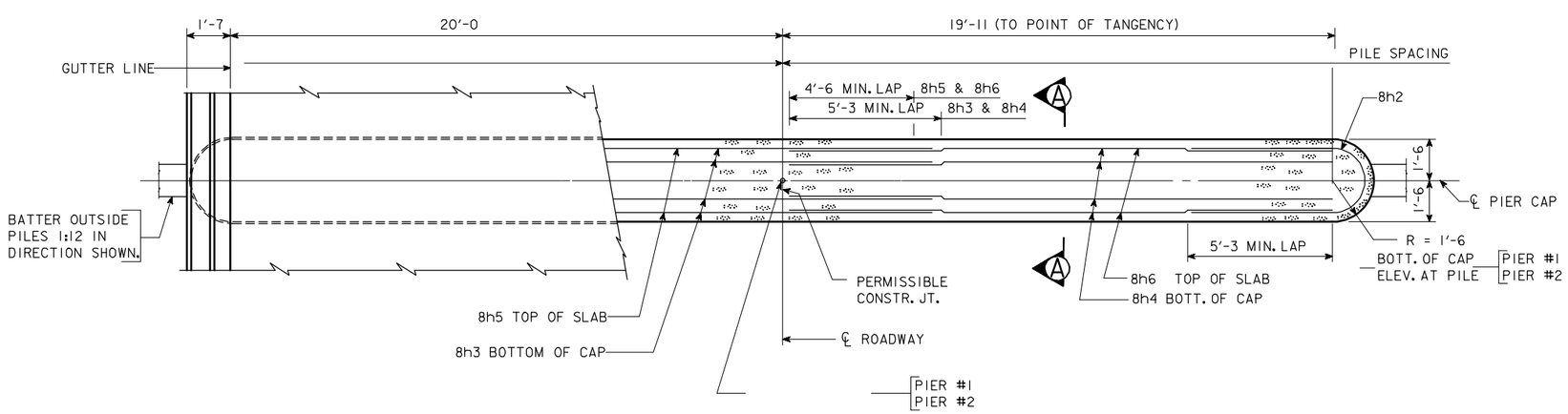

PIER PLAN

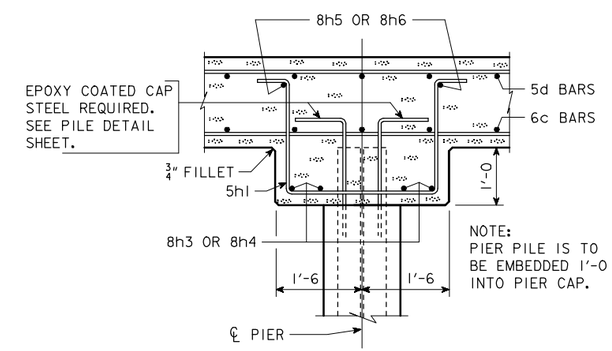

SECTION A-A

IOWA DEPARTMENT OF TRANSPORTATION - HIGHWAY DIVISION

DESIGN SHEET NO. ____ OF ____ FILE NO. _____ DESIGN NO. _____

DESIGN TEAM	CONCRETE SLAB, SUBSTRUCTURE DETAILS - 40' ROADWAY - 0° SKEW	STANDARD SHEET 4441	COUNTY	PROJECT NUMBER	SHEET NUMBER

REVISED 07-05 - PAVING NOTCH EXTENDED TO INTERCEPT THE WINGS. LONGIT. BARS EXTENDED 2" CLEAR OF WINGS.
ENGLISHCCSBRIDGES.DGN 4441- 08-12-88

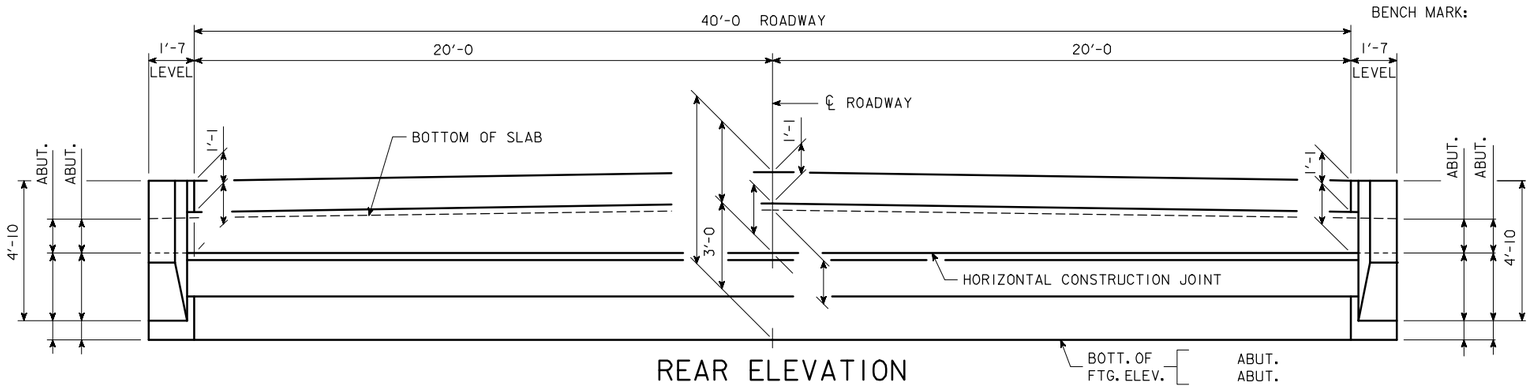

REAR ELEVATION

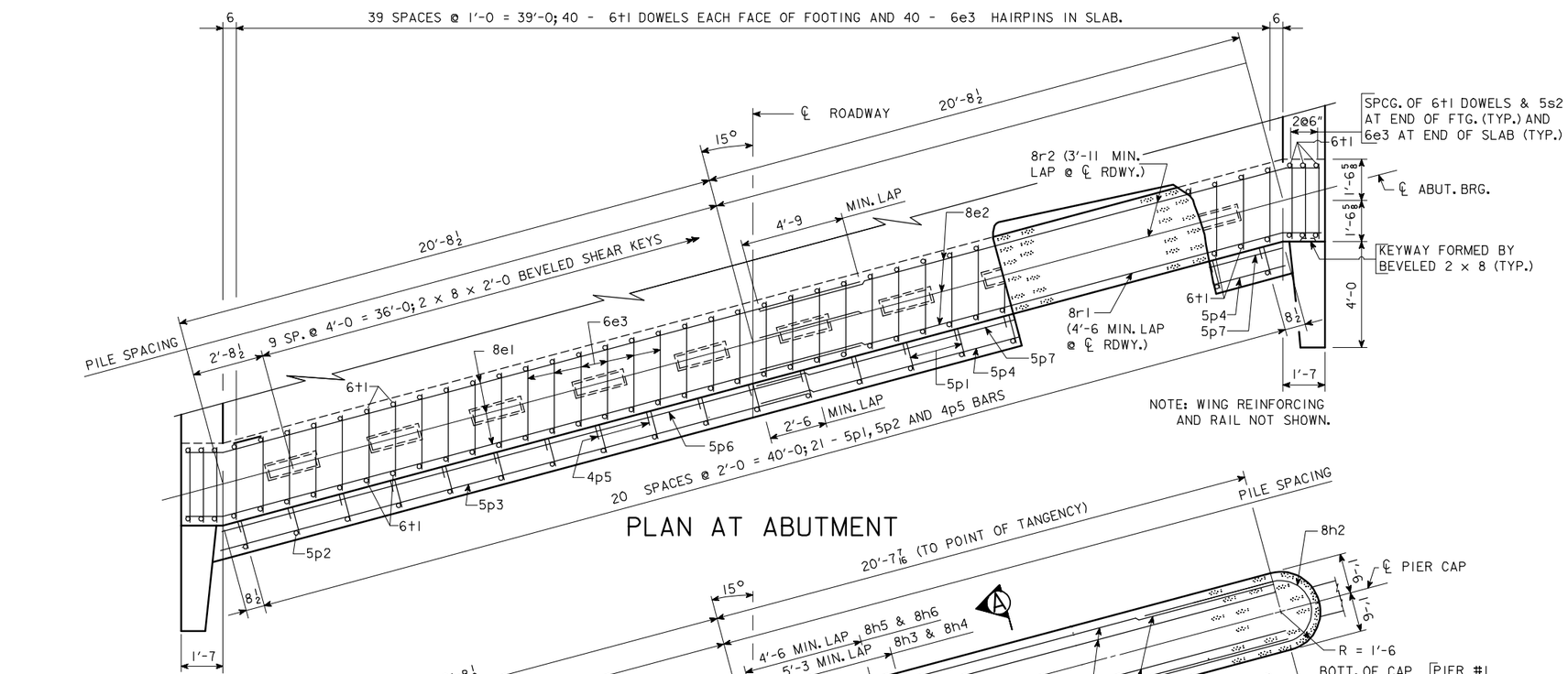

PLAN AT ABUTMENT

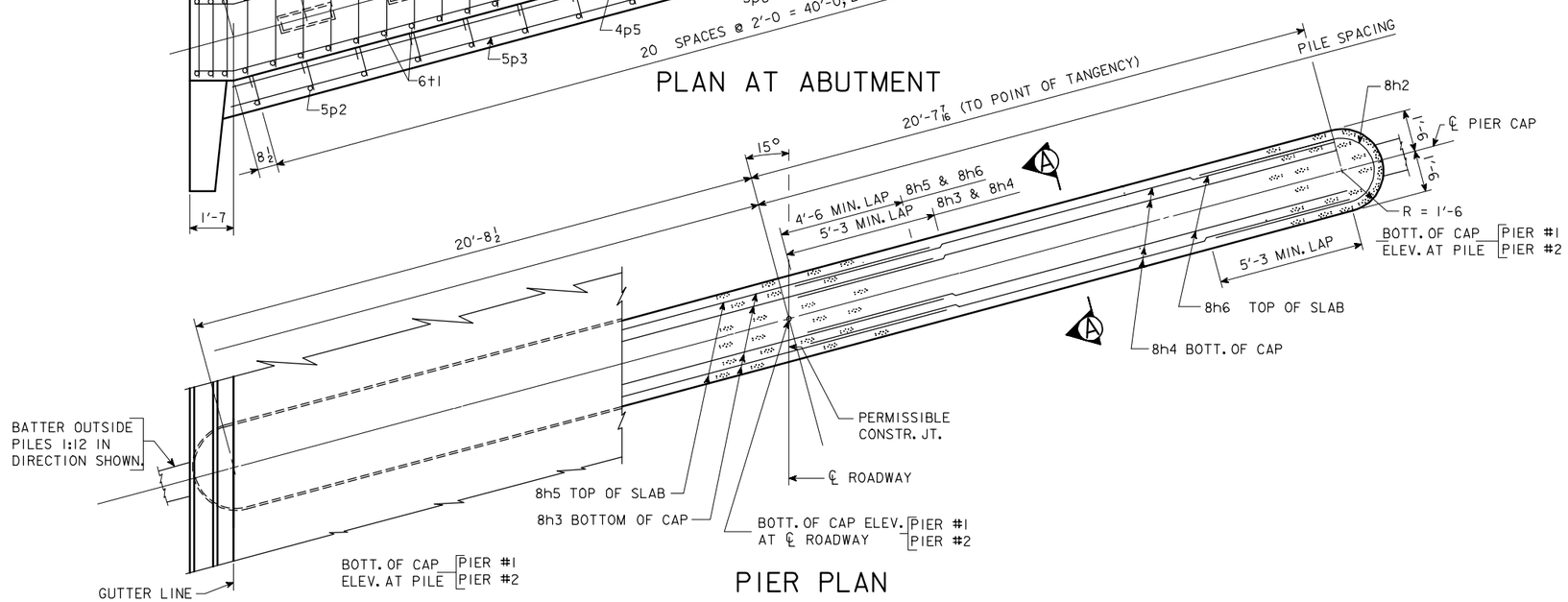

PIER PLAN

SUBSTRUCTURE NOTES:

MINIMUM CLEAR DISTANCE FROM FACE OF CONCRETE TO NEAR REINFORCING BAR IS TO BE 2" UNLESS OTHERWISE NOTED OR SHOWN.

THE TRANSVERSE REBARS ARE DETAILED WITH A SPLICE LAP. AT THE CONTRACTOR'S OPTION, THIS LAP MAY BE ELIMINATED BY FURNISHING FULL LENGTH BARS WITH NO REDUCTION IN PAY WEIGHT FOR SAME.

THE DESIGN BEARING FOR THE ABUTMENT PILES IS ?? TONS.

THE DESIGN BEARING FOR THE PIER PILES IS ?? TONS.

NOTE: BARRIER RAIL NOT SHOWN IN DETAILS.

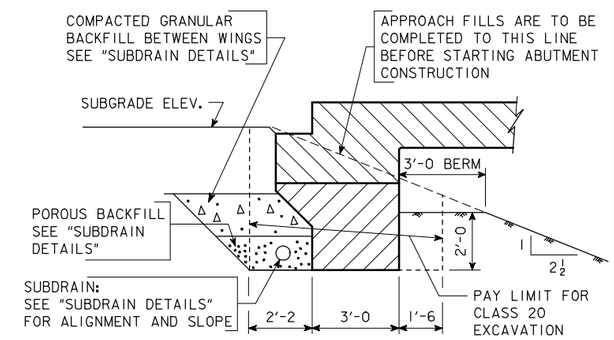

ABUTMENT EXCAVATION DETAILS

SECTION NORMAL TO ℄ ABUT. BRG.

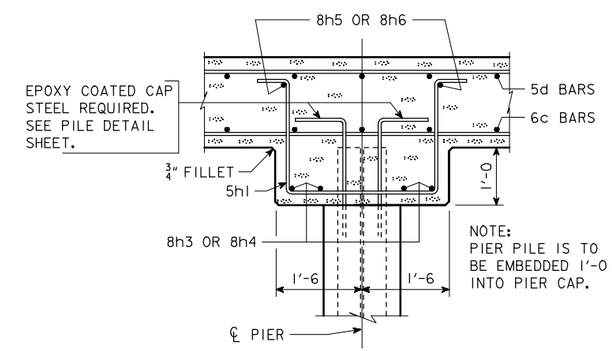

SECTION A-A

IOWA DEPARTMENT OF TRANSPORTATION - HIGHWAY DIVISION

DESIGN SHEET NO. ____ OF ____ FILE NO. _____ DESIGN NO. _____

REVISED 07-05 - PAVING NOTCH EXTENDED TO INTERCEPT THE WINGS. LONGIT. BARS EXTENDED 2" CLEAR OF WINGS.
ENGLISHCCSBRIDGES.DGN 4442 - 08-12-88

DESIGN TEAM	CONCRETE SLAB, SUBSTRUCTURE DETAILS - 40' ROADWAY - 15° SKEW R.A.	STANDARD SHEET 4442	COUNTY	PROJECT NUMBER	SHEET NUMBER

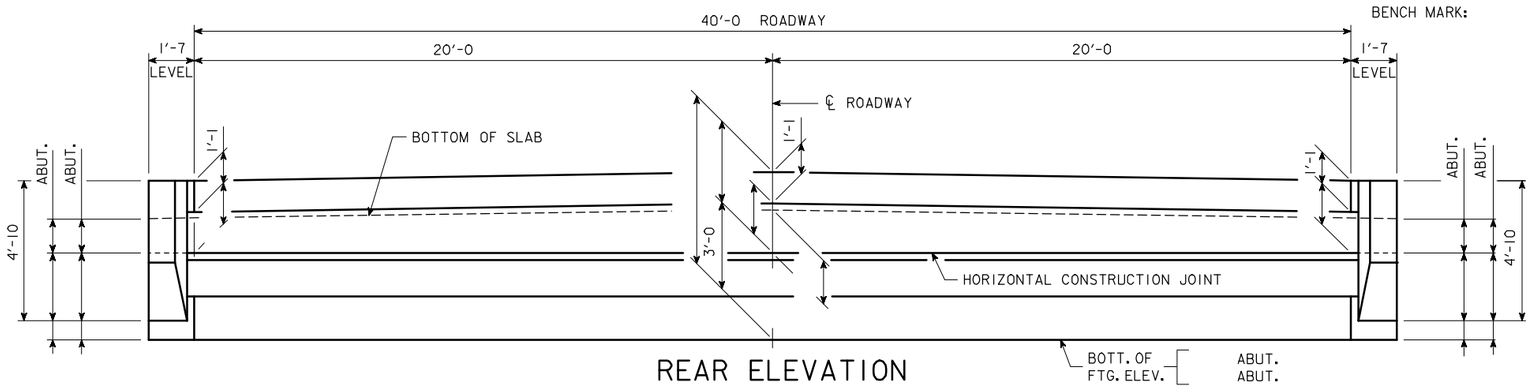

REAR ELEVATION

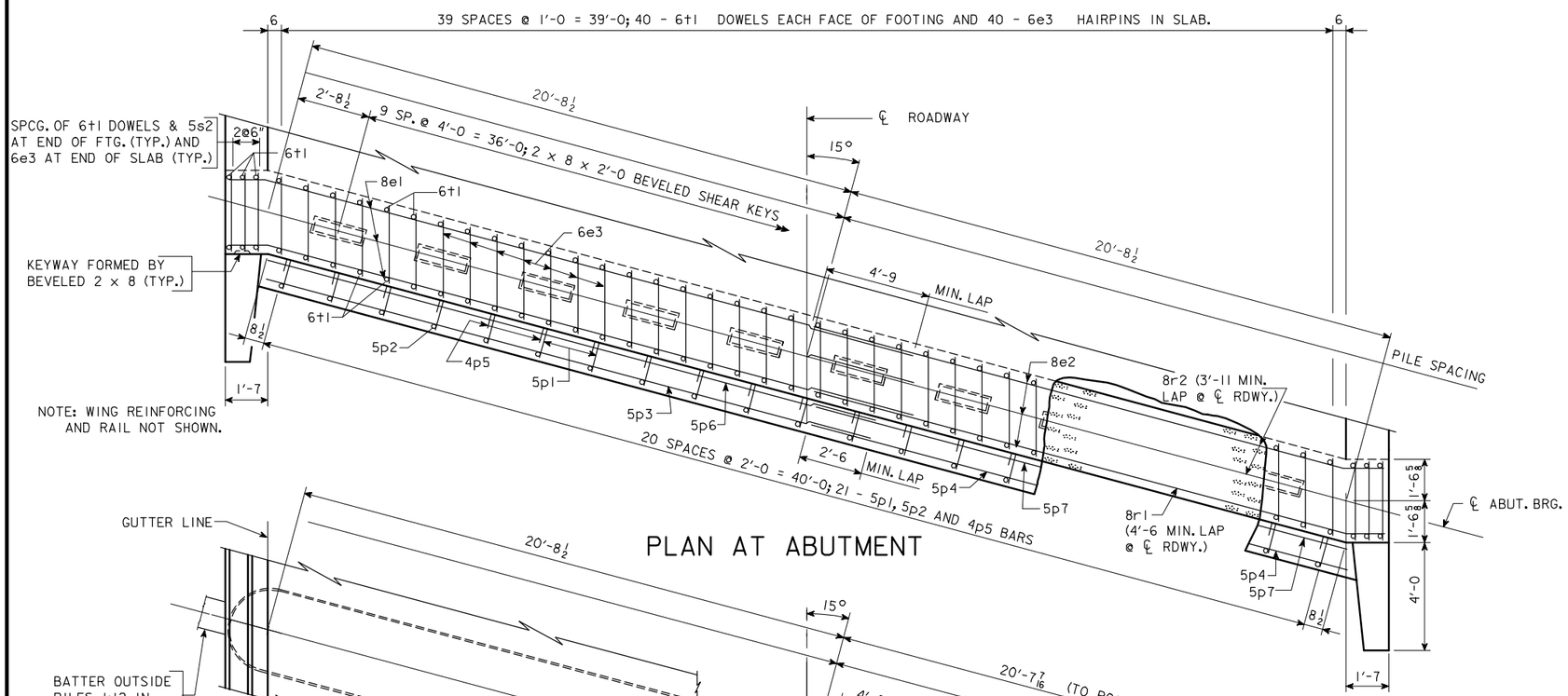

PLAN AT ABUTMENT

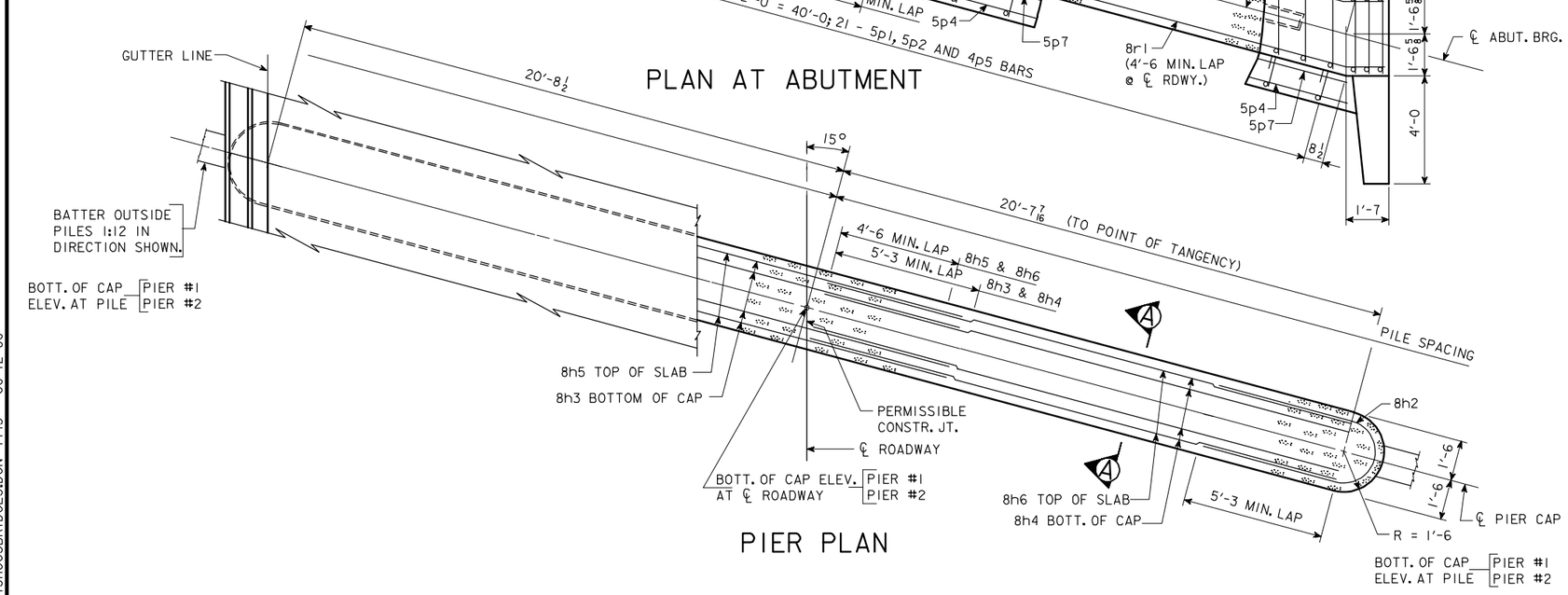

PIER PLAN

SUBSTRUCTURE NOTES:

MINIMUM CLEAR DISTANCE FROM FACE OF CONCRETE TO NEAR REINFORCING BAR IS TO BE 2" UNLESS OTHERWISE NOTED OR SHOWN.

THE TRANSVERSE REBARS ARE DETAILED WITH A SPLICE LAP. AT THE CONTRACTOR'S OPTION, THIS LAP MAY BE ELIMINATED BY FURNISHING FULL LENGTH BARS WITH NO REDUCTION IN PAY WEIGHT FOR SAME.

THE DESIGN BEARING FOR THE ABUTMENT PILES IS ?? TONS.

THE DESIGN BEARING FOR THE PIER PILES IS ?? TONS.

NOTE: BARRIER RAIL NOT SHOWN IN DETAILS.

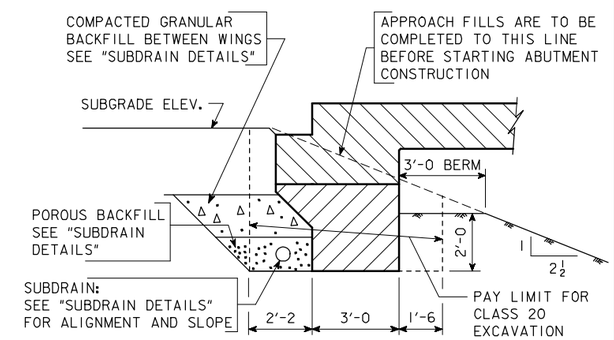

ABUTMENT EXCAVATION DETAILS

SECTION NORMAL TO ℄ ABUT. BRG.

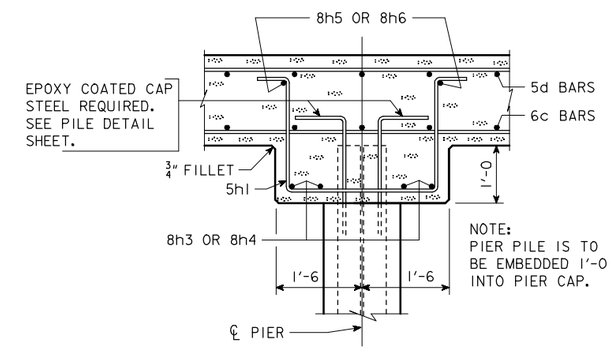

SECTION A-A

IOWA DEPARTMENT OF TRANSPORTATION - HIGHWAY DIVISION

DESIGN SHEET NO. ____ OF ____ FILE NO. _____ DESIGN NO. _____

REVISED 07-05 - PAVING NOTCH EXTENDED TO INTERCEPT THE WINGS. LONGIT. BARS EXTENDED 2" CLEAR OF WINGS.
ENGLISHCCSBRIDGES.DGN 4443 - 08-12-88

DESIGN TEAM	CONCRETE SLAB, SUBSTRUCTURE DETAILS - 40' ROADWAY - 15° SKEW L.A.	STANDARD SHEET 4443	COUNTY	PROJECT NUMBER	SHEET NUMBER

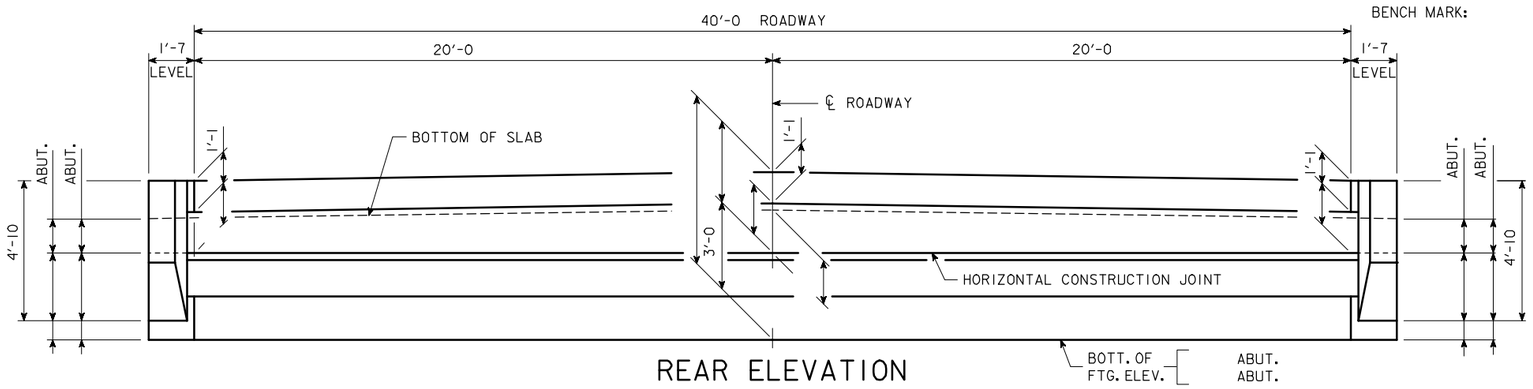

REAR ELEVATION

SUBSTRUCTURE NOTES:

MINIMUM CLEAR DISTANCE FROM FACE OF CONCRETE TO NEAR REINFORCING BAR IS TO BE 2" UNLESS OTHERWISE NOTED OR SHOWN.

THE TRANSVERSE REBARS ARE DETAILED WITH A SPLICE LAP. AT THE CONTRACTOR'S OPTION, THIS LAP MAY BE ELIMINATED BY FURNISHING FULL LENGTH BARS WITH NO REDUCTION IN PAY WEIGHT FOR SAME.

THE DESIGN BEARING FOR THE ABUTMENT PILES IS ?? TONS.

THE DESIGN BEARING FOR THE PIER PILES IS ?? TONS.

NOTE: BARRIER RAIL NOT SHOWN IN DETAILS.

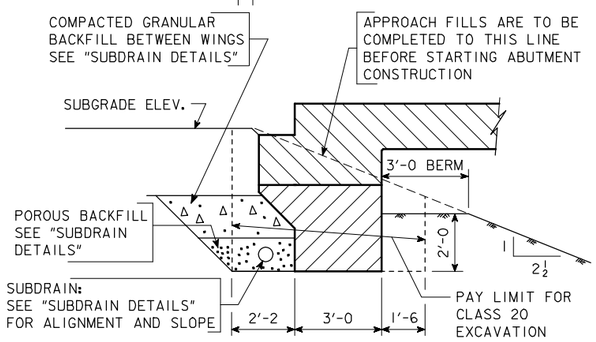

ABUTMENT EXCAVATION DETAILS

SECTION NORMAL TO ℄ ABUT. BRG.

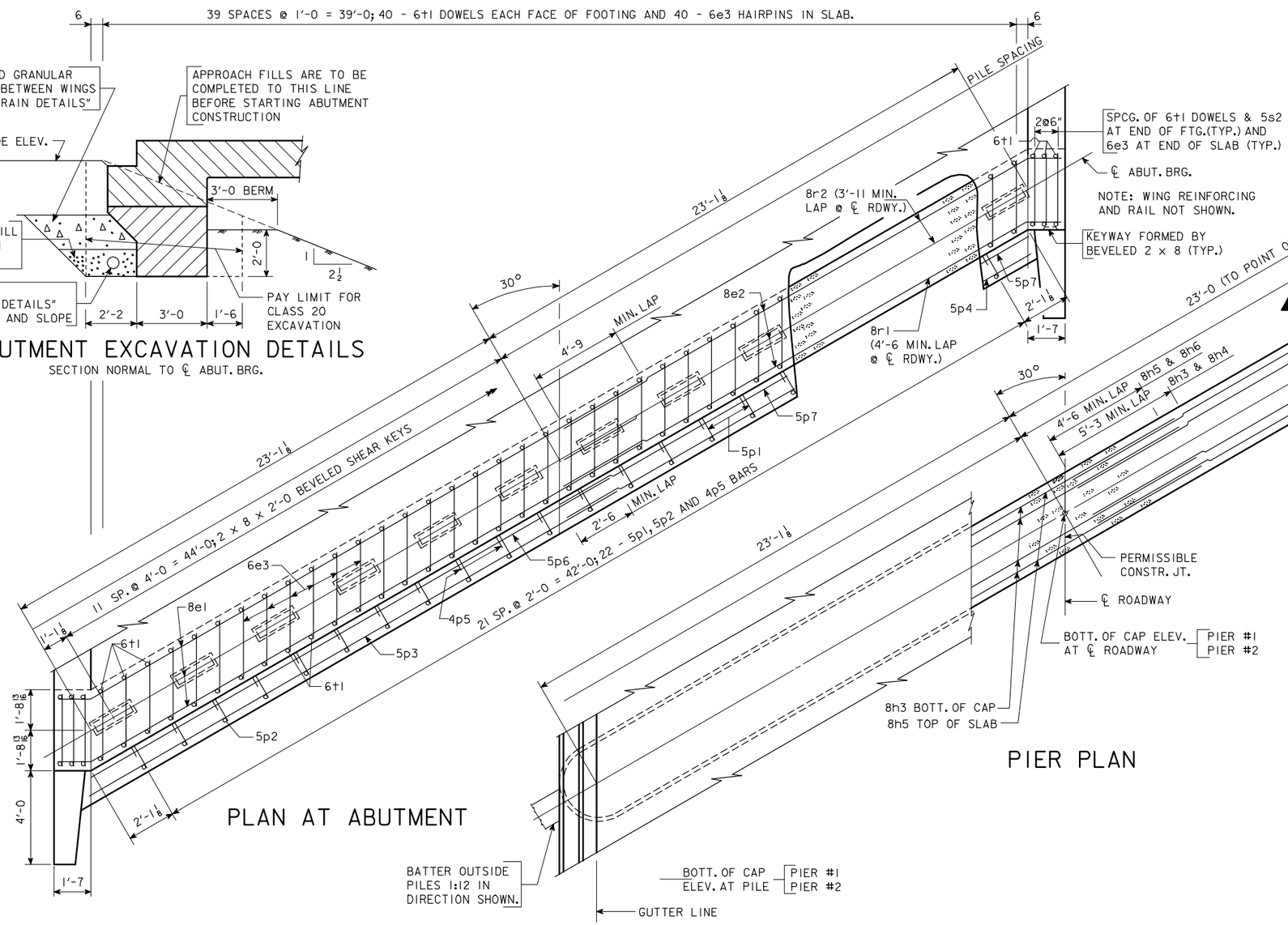

PLAN AT ABUTMENT

PIER PLAN

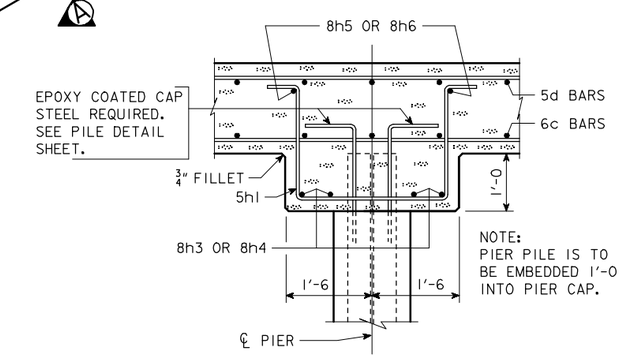

SECTION A-A

IOWA DEPARTMENT OF TRANSPORTATION - HIGHWAY DIVISION

DESIGN SHEET NO. ____ OF ____ FILE NO. _____ DESIGN NO. _____

REVISED 07-05 - PAVING NOTCH EXTENDED TO INTERCEPT THE WINGS. LONGIT. BARS EXTENDED 2" CLEAR OF WINGS.
ENGLISHCCSBRIDGES.DGN 4444 - 08-12-88

DESIGN TEAM	CONCRETE SLAB, SUBSTRUCTURE DETAILS - 40' ROADWAY - 30° SKEW R.A.	STANDARD SHEET 4444	COUNTY	PROJECT NUMBER	SHEET NUMBER

09-FEB-2006 10:36 ajeffer W:\Projects\0000006002\BRFinal\EnglishCCSBridges.dgn 4444

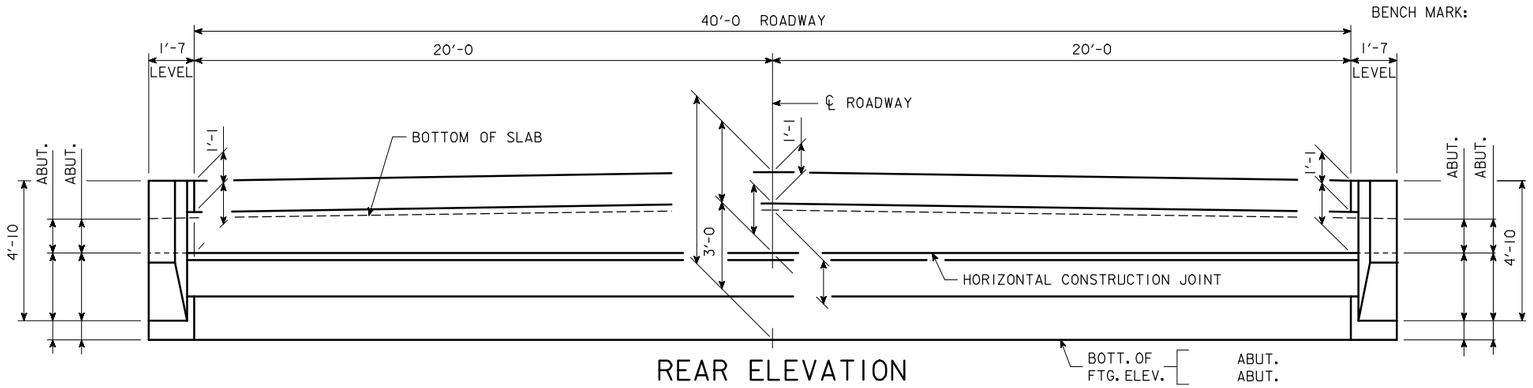

REAR ELEVATION

SUBSTRUCTURE NOTES:

MINIMUM CLEAR DISTANCE FROM FACE OF CONCRETE TO NEAR REINFORCING BAR IS TO BE 2" UNLESS OTHERWISE NOTED OR SHOWN.

THE TRANSVERSE REBARS ARE DETAILED WITH A SPLICE LAP. AT THE CONTRACTOR'S OPTION, THIS LAP MAY BE ELIMINATED BY FURNISHING FULL LENGTH BARS WITH NO REDUCTION IN PAY WEIGHT FOR SAME.

THE DESIGN BEARING FOR THE ABUTMENT PILES IS ?? TONS.

THE DESIGN BEARING FOR THE PIER PILES IS ?? TONS.

NOTE: BARRIER RAIL NOT SHOWN IN DETAILS.

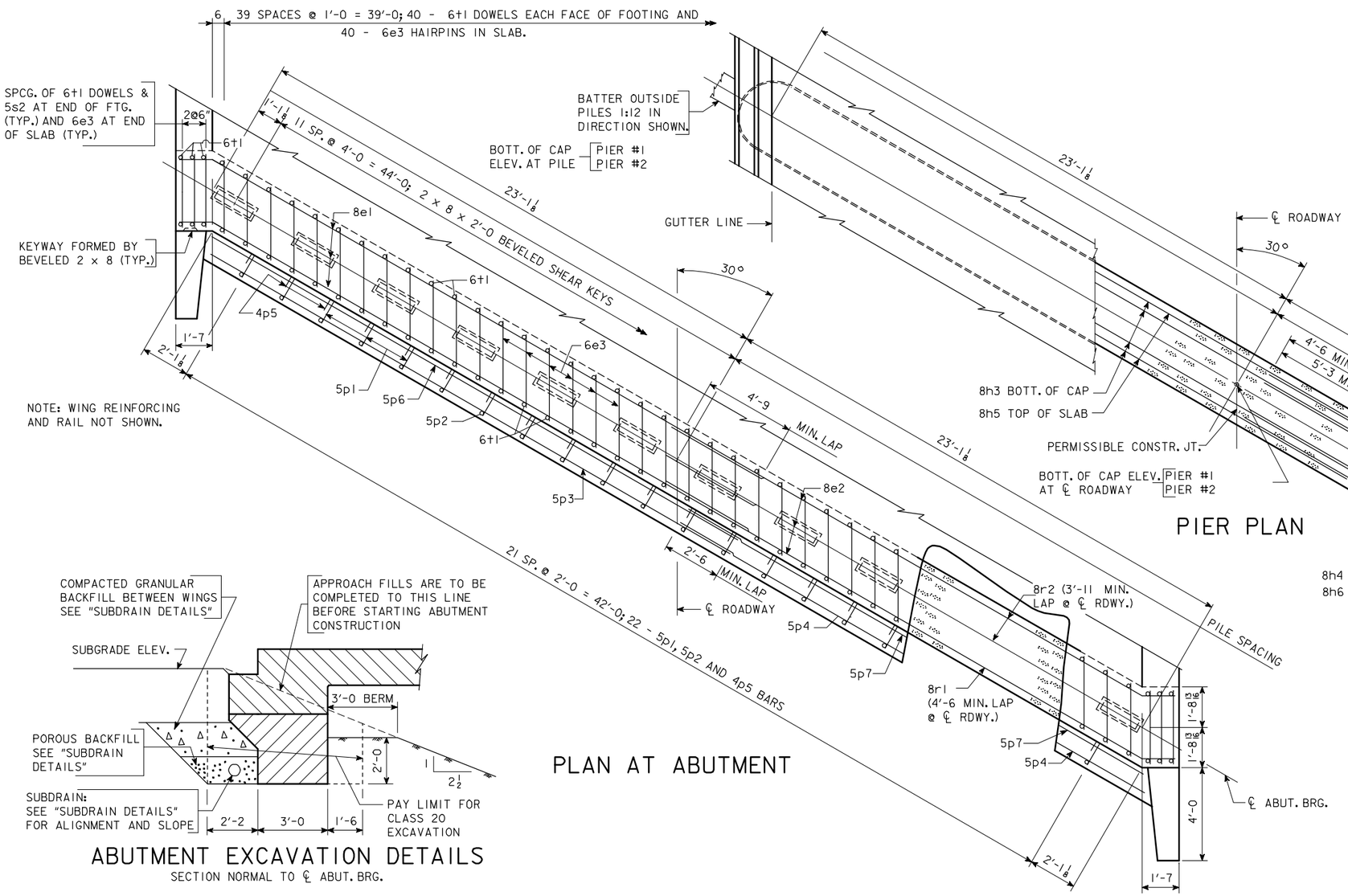

PIER PLAN

PLAN AT ABUTMENT

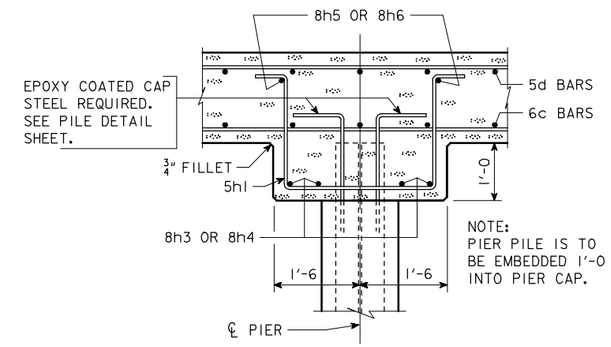

SECTION A-A

ABUTMENT EXCAVATION DETAILS

SECTION NORMAL TO ℄ ABUT. BRG.

IOWA DEPARTMENT OF TRANSPORTATION - HIGHWAY DIVISION

DESIGN SHEET NO. ____ OF ____ FILE NO. _____ DESIGN NO. _____

DESIGN TEAM	CONCRETE SLAB, SUBSTRUCTURE DETAILS - 40' ROADWAY - 30° SKEW L.A.	STANDARD SHEET 4445	COUNTY	PROJECT NUMBER	SHEET NUMBER

REVISED 07-05 - PAVING NOTCH EXTENDED TO INTERCEPT THE WINGS. LONGIT. BARS EXTENDED 2" CLEAR OF WINGS.
ENGLISHCCSBRIDGES.DGN 4445 - 08-12-88

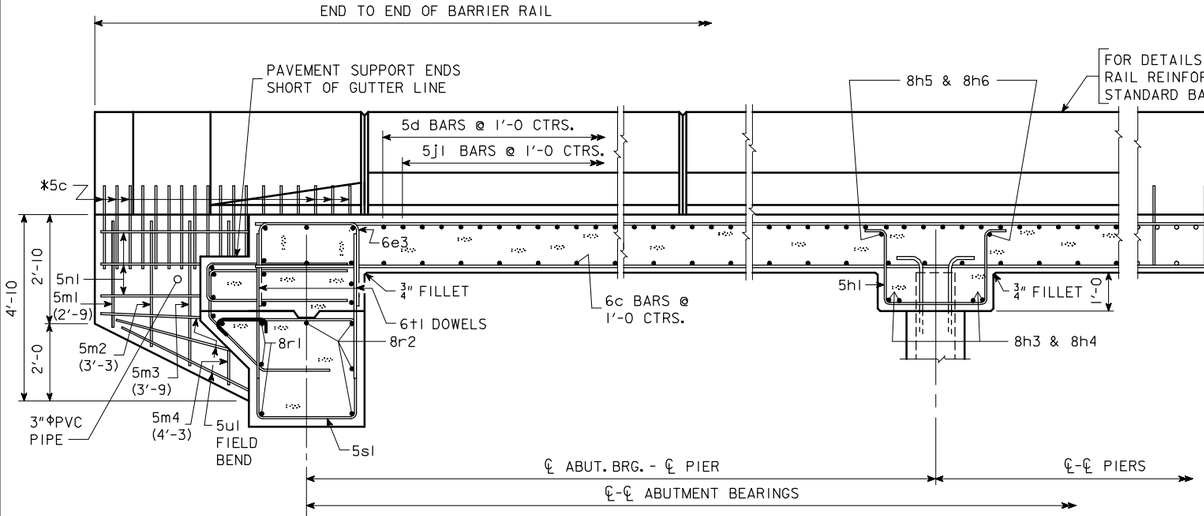

PART LONGITUDINAL SECTION NEAR GUTTER LINE

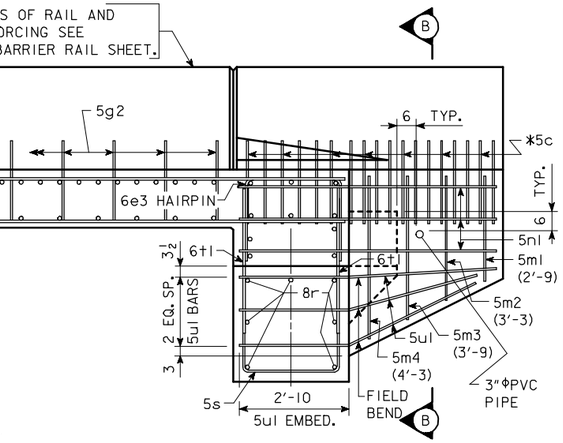

PART ELEVATION

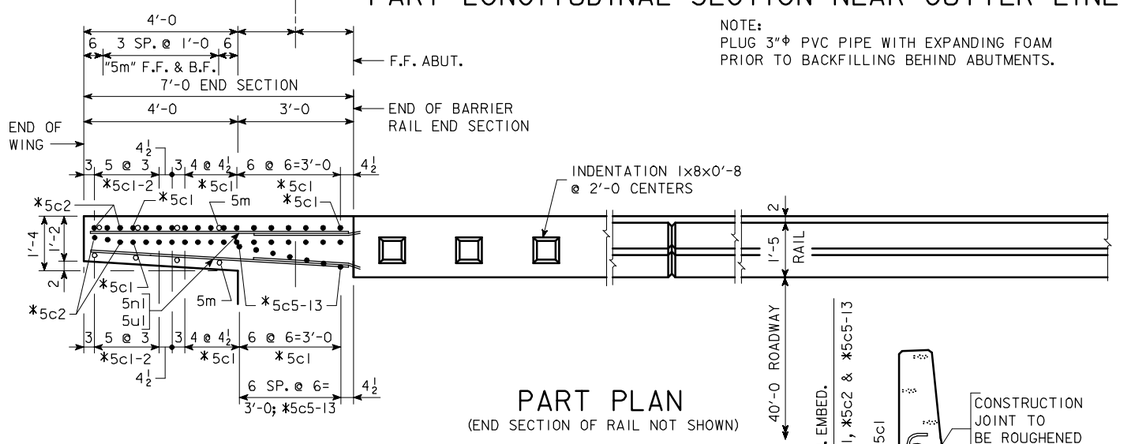

NOTE:
PLUG 3"Φ PVC PIPE WITH EXPANDING FOAM PRIOR TO BACKFILLING BEHIND ABUTMENTS.

PART PLAN

(END SECTION OF RAIL NOT SHOWN)

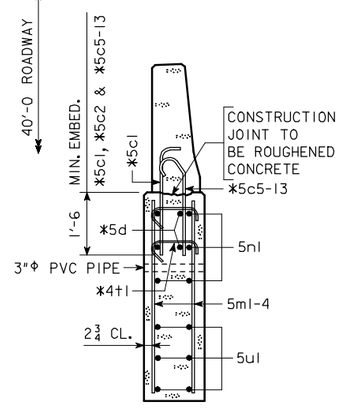

SECTION B-B

* NOTE: SEE END SECTION DETAILS IN THESE PLANS FOR DETAILS OF BARRIER RAIL END SECTION. REINFORCING BARS 5c1, 5c2, 5c5-13, 5d & 4t1 ARE INCLUDED IN THE SUPERSTRUCTURE QUANTITIES.

NOTE: 5m1-4 & 5n1 BARS ARE INCLUDED IN SUPERSTRUCTURE BAR LIST. 5c, 5d & 4t1 BARS ARE INCLUDED IN BARRIER RAIL BAR LIST.

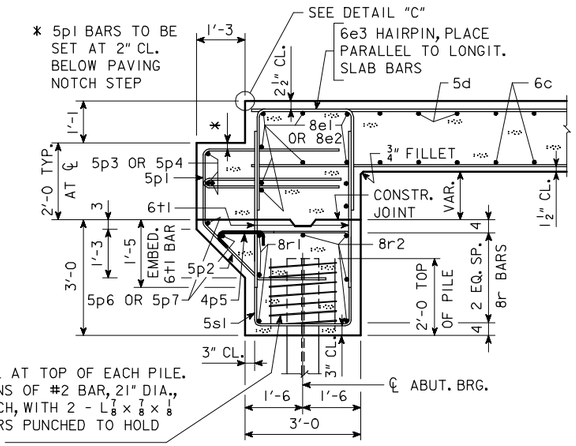

SECTION NORMAL TO ABUTMENT AT ℄

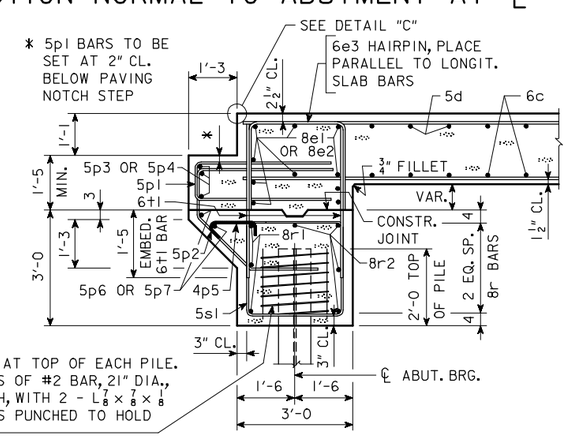

SECTION NORMAL TO ABUTMENT AT GUTTERLINE

NOTE THE LOCATION/RELATIONSHIP OF 8e1 AND 8e2 BARS IN THE BACKFACE OF THE DIAPHRAGM WITH THE 5p1 AND 5p2 BARS SHALL BE MAINTAINED AS THE DIAPHRAGM CHANGES DEPTH.

SUPERSTRUCTURE NOTES:

THIS BRIDGE IS DESIGNED FOR HS20-44 LOADING PLUS 20 LBS. PER SQ. FT. OF ROADWAY FOR FUTURE WEARING SURFACE.

THE BRIDGE FLOOR AS SHOWN INCLUDES 1/2" INTEGRAL WEARING SURFACE.

MINIMUM CLEAR DISTANCE FROM FACE OF CONCRETE TO NEAR REINFORCING BAR IS TO BE 2" UNLESS OTHERWISE NOTED OR SHOWN.

ALL REINFORCING BARS (EXCEPT WING BARS) AND ALL BARRIER RAIL REINFORCING MUST BE EPOXY COATED.

THE TRANSVERSE REBARS ARE DETAILED WITH A SPLICE LAP. AT THE CONTRACTOR'S OPTION, THIS LAP MAY BE ELIMINATED BY FURNISHING FULL LENGTH BARS WITH NO REDUCTION IN PAY WEIGHT FOR SAME.

TOP MAT OF REINFORCING STEEL IS TO BE SUPPORTED BY INDIVIDUAL METAL BAR CHAIRS SPACED AT NOT MORE THAN 3'-0 CENTERS LONGITUDINALLY AND TRANSVERSELY. THE BOTTOM MAT OF REINFORCING STEEL IS TO BE SUPPORTED BY INDIVIDUAL METAL BAR CHAIRS SPACED AT NOT MORE THAN 3'-0 CENTERS LONGITUDINALLY AND TRANSVERSELY, OR BY CONTINUOUS ROWS OF METAL HIGH CHAIR OR SLAB BOLSTERS SPACED 4'-0 APART. BAR CHAIRS SUPPORTING SLAB REINFORCING STEEL ARE TO BE EPOXY COATED.

THE CONCRETE SLAB IS TO BE PLACED WITH A MINIMUM OF CONSTRUCTION JOINTS. PROCEDURES FOR PLACING SLAB CONCRETE SHALL BE SUBMITTED FOR APPROVAL TOGETHER WITH A STATEMENT OF THE PROPOSED METHOD AND EVIDENCE THAT THE CONTRACTOR POSSESSES THE NECESSARY EQUIPMENT AND FACILITIES TO ACCOMPLISH THE REQUIRED RESULT. SLAB FALSEWORK SHALL BE REMOVED PRIOR TO CONSTRUCTION OF THE BARRIER RAILS, UNLESS SLAB CONSTRUCTION IS STAGED. SLAB FALSEWORK SHALL NOT BE REMOVED UNTIL THE FULL WIDTH SLAB HAS BEEN PLACED AND HAS ATTAINED THE AGE AND STRENGTH REQUIRED BY THE STANDARD SPECIFICATIONS.

REINFORCING BAR LIST-ONE ABUTMENT

	BAR	LOCATION	SHAPE	NO.	LENGTH	WEIGHT
EPOXY-COATED	5p2	PAVING SUPPORT, TRANSV.			9'-4	
	4p5	PAVING SUPPORT, TRANSV.			1'-11	
	5p6	PAVING SUPPORT, LONGIT., SIDE "A"	—	2		
	5p7	PAVING SUPPORT, LONGIT., SIDE "B"	—	2		
	8r1	FOOTING, LONGIT., B.F.H.	—	6		
	5s1	FOOTING, HOOPS			11'-0	
	5s2	FOOTING, HOOPS @ ENDS		6		
	6t1	FOOTING TO SLAB DOWELS	—	92	3'-11	541
		REINFORCING STEEL, EPOXY-COATED - TOTAL (LBS.)				
NON-COATED	8r2	FOOTING, LONGIT., F.F.H.	—	8		
	5u1	WING, LONGITUDINAL	—	12	6'-8	83
	#2	PILE SPIRAL			38'-6	
		SPIRAL SPACERS L 7/8 x 7/8 x 1/8 x 0.70	—		1'-10	
		REINFORCING STEEL - TOTAL (LBS.)				

BENT BAR DETAILS

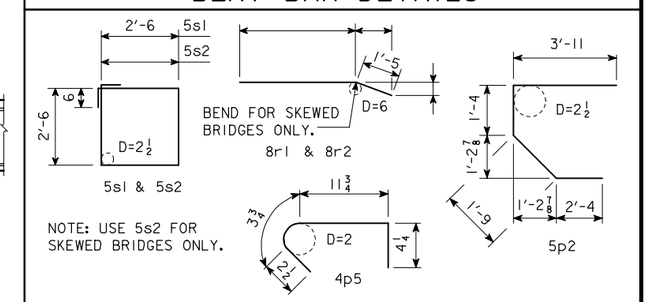

ESTIMATED QUANTITIES-TWO ABUTMENTS

ITEM		UNITS	QUANTITY
STRUCTURAL CONCRETE (BRIDGE)		CU. YDS.	
REINFORCING STEEL, EPOXY-COATED		LBS.	
REINFORCING STEEL		LBS.	
CLASS 20 EXCAVATION		CU. YDS.	
	FURNISH	LIN.FT.	
	DRIVE	LIN.FT.	

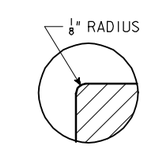

DETAIL "C"

IOWA DEPARTMENT OF TRANSPORTATION - HIGHWAY DIVISION
DESIGN SHEET NO. ____ OF ____ FILE NO. _____ DESIGN NO. _____

REVISED 07-05 - 3" PVC PIPE ADDED TO WINGS AND NOTE.
ENGLISHCCSBRIDGES.DGN 4446 - 08-12-88

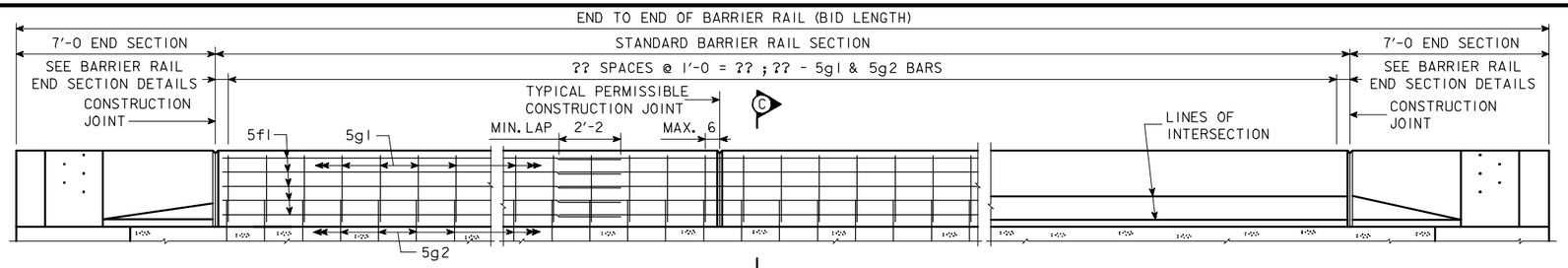

ELEVATION OF BARRIER RAIL

EPOXY COATED REINFORCING STEEL - TWO RAILS

SECTION	BAR	LOCATION	SHAPE	NUMBER	LENGTH	WEIGHT
2 STANDARD SECTIONS	5g1	RAIL, VERTICAL			5'-11	
	5g2	RAIL TO SLAB				
	5f1	RAIL, LONGITUDINAL				
	BARRIER RAIL END SECTION			4 AT 381 LBS.		1524
	TOTAL WEIGHT OF RE-BAR IN RAIL (INCLUDE WITH SUPERSTRUCTURE REINFORCING)				TOTAL (LBS.)	

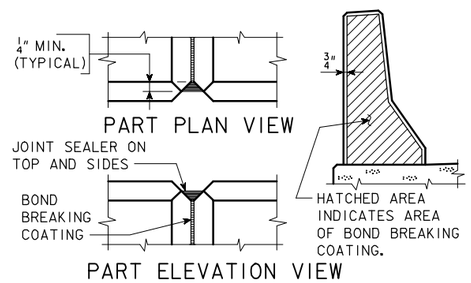

BARRIER RAIL JOINT DETAILS

BENT BAR DETAILS

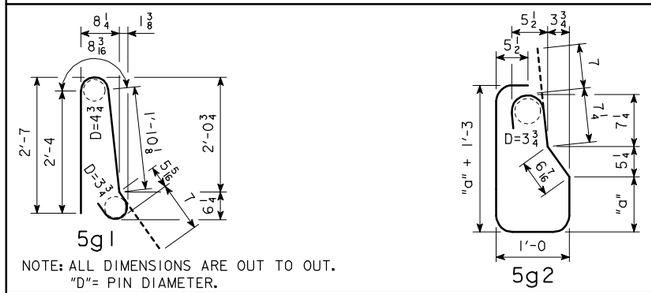

5g2 BARS		
BRIDGE	"a"	LENGTH
70'	1'-2	6'-10
80'	1'-2 3/4	6'-11
90'	1'-3 3/4	7'-1
100'	1'-5	7'-4
110'	1'-6	7'-6
120'	1'-7 1/2	7'-9
130'	1'-8 3/4	7'-11

LINEAL FEET OF BARRIER RAIL

BRIDGE LENGTH		70'	80'	90'	100'	110'	120'	130'
CONCRETE BARRIER RAIL (LIN. FT.)	0° SKEW	162.0	182.0	202.0	222.0	242.0	262.0	282.0
	15° SKEW	162.2	182.2	202.2	222.2	242.2	262.2	282.2
	30° SKEW	162.9	182.9	202.9	222.9	242.9	262.9	282.9

CONCRETE QUANTITY = ?? CU. YDS.
(INCLUDES 4 END SECTIONS AT 0.62 CU.YDS. EACH)

BARRIER RAIL NOTES:

MINIMUM CLEAR DISTANCE FROM FACE OF CONCRETE TO NEAR REINFORCING BAR IS TO BE 2" UNLESS OTHERWISE NOTED OR SHOWN.

THE PERMISSIBLE CONSTRUCTION JOINTS ARE TO BE PLACED BETWEEN VERTICAL BARS AT A MINIMUM SPACING OF 20 FEET. CONSTRUCTION JOINT CONTACT SURFACES ARE TO BE COATED WITH AN APPROVED BOND BREAKER.

COST OF THE JOINT SEALER AND BOND BREAKER SHALL BE CONSIDERED INCIDENTAL TO OTHER CONSTRUCTION.

ALL BARRIER RAIL REINFORCING STEEL IS TO BE EPOXY COATED.

THE CONCRETE BARRIER RAIL IS TO BE BID ON A LINEAL FOOT BASIS. THE NUMBER OF LINEAL FEET OF BARRIER RAIL INSTALLED WILL BE PAID FOR AT THE CONTRACT PRICE PER LINEAL FOOT BASED ON PLAN QUANTITIES. PRICE BID FOR CONCRETE BARRIER RAILING SHALL BE FULL COMPENSATION FOR FURNISHING ALL MATERIAL, EXCLUDING REINFORCING STEEL, AND ALL OF THE EQUIPMENT AND LABOR REQUIRED TO ERECT THE RAIL IN ACCORDANCE WITH THESE PLANS AND CURRENT SPECIFICATIONS. IF CONDUIT IS REQUIRED IN THIS PLAN THE RIGID STEEL CONDUIT, JUNCTION BOXES AND FITTINGS INCLUDING LABOR AND ANY ADDITIONAL WORK TO DO THE INSTALLATION IS CONSIDERED INCIDENTAL TO THE COST OF THE RAILING.

ALL BARRIER RAIL REINFORCING STEEL IS TO BE INCLUDED WITH THE SUPERSTRUCTURE REINFORCING STEEL.

THE JOINT SEALER SHALL BE LIGHT GRAY NONSAG LATEX CAULKING SEALER MARKETED FOR OUTDOOR USE. NO TESTING OR CERTIFICATION IS REQUIRED.

TOP OF THE BARRIER RAIL IS TO BE PARALLEL TO THE THEORETICAL ℄ GRADE.

CROSS SECTIONAL AREA OF THE STANDARD SECTION OF THE BARRIER RAIL = 2.84 SQUARE FEET.

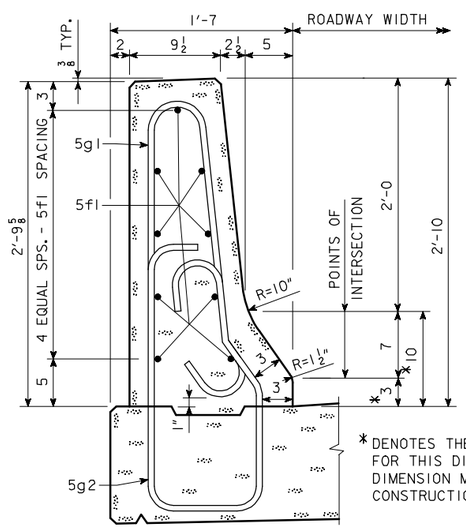

* DENOTES THE MAXIMUM VALUE FOR THIS DIMENSION. THIS DIMENSION MAY VARY DUE TO CONSTRUCTION INACCURACIES.

PART SECTION C-C

NOTE:
SEE BARRIER RAIL END SECTION WITH 4'-0 WING IN THESE PLANS FOR DETAILS NOT SHOWN ON THIS SHEET.

IOWA DEPARTMENT OF TRANSPORTATION - HIGHWAY DIVISION
DESIGN SHEET NO. ____ OF ____ FILE NO. _____ DESIGN NO. _____

DESIGN TEAM	CONCRETE SLAB BARRIER RAIL - 40' ROADWAY	STANDARD SHEET 4447	COUNTY	PROJECT NUMBER	SHEET NUMBER

REVISED 09-01 - STD. SHEET NO. RENAMED 4447 (CADD NAME HE4447.S01). BARRIER RAIL END SECTION DETAILS MOVED TO STD. SHEET 1017.
ENGLISHCCSBRIDGES.DGN 4440 - 02-00
09-FEB-2006 10:37 ajeffer W:\Projects\0000006002\BRFinal\EnglishCCSBridges.dgn 4447

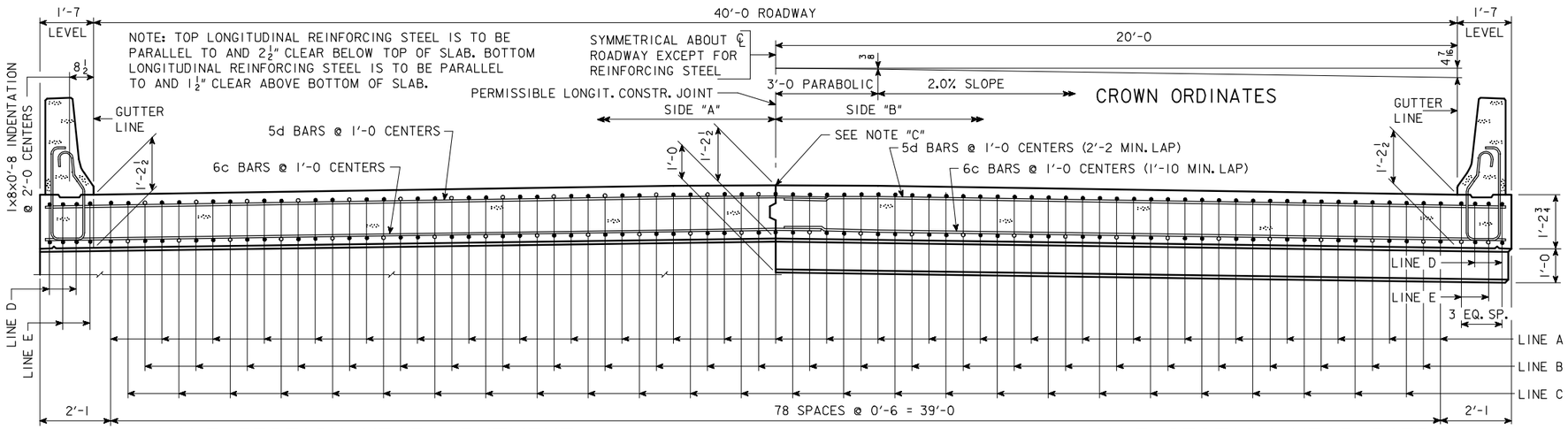

HALF SECTION NEAR ABUTMENT

NOTE "C": IF PERMISSIBLE LONGITUDINAL JOINT IS USED, BARS ON ℄ ROADWAY MAY BE SHIFTED TO CLEAR JOINT BY 1".

SLAB CROSS-SECTIONAL AREA-SIDE "A" =	26.35 SQ. FT.
SLAB CROSS-SECTIONAL AREA-SIDE "B" =	26.35 SQ. FT.
BARRIER RAIL CROSS-SECTIONAL AREA-ONE RAIL =	2.84 SQ. FT.

HALF SECTION NEAR PIER

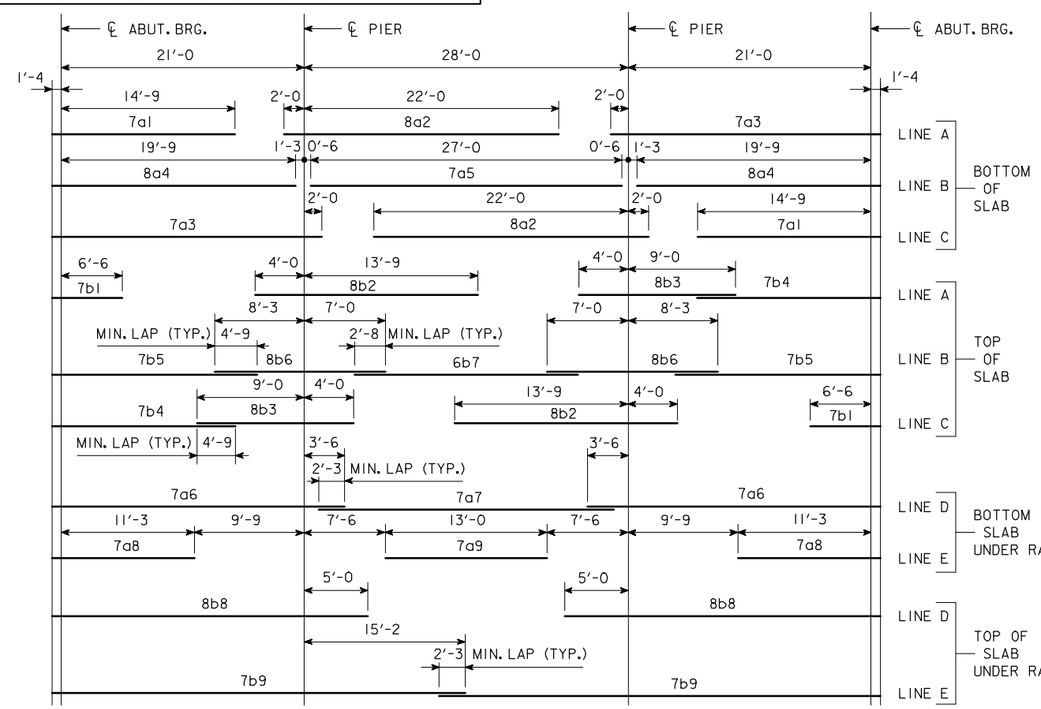

PLACEMENT FOR LONGITUDINAL REINFORCEMENT

EPOXY COATED REINFORCING BAR LIST SUPERSTRUCTURE

BAR	LOCATION	SHAPE	NO.	LENGTH	WEIGHT
7a1	BOTT. OF SLAB, LONGIT.	—	53	16'-1	1742
8a2	BOTT. OF SLAB, LONGIT.	—	53	24'-0	3396
7a3	BOTT. OF SLAB, LONGIT.	—	53	24'-4	2636
8a4	BOTT. OF SLAB, LONGIT.	—	52	21'-1	2927
7a5	BOTT. OF SLAB, LONGIT.	—	26	27'-0	1435
7a6	BOTT. OF SLAB, LONGIT., AT RAIL	—	8	25'-10	422
7a7	BOTT. OF SLAB, LONGIT., AT RAIL	—	4	25'-6	208
7a8	BOTT. OF SLAB, LONGIT., AT RAIL	—	8	12'-7	206
7a9	BOTT. OF SLAB, LONGIT., AT RAIL	—	4	13'-0	106
7b1	TOP OF SLAB, LONGIT.	—	53	7'-10	849
8b2	TOP OF SLAB, LONGIT.	—	53	17'-9	2512
8b3	TOP OF SLAB, LONGIT.	—	53	13'-0	1840
7b4	TOP OF SLAB, LONGIT.	—	53	18'-1	1959
7b5	TOP OF SLAB, LONGIT.	—	52	18'-10	2002
8b6	TOP OF SLAB, LONGIT.	—	52	15'-3	2117
6b7	TOP OF SLAB, LONGIT.	—	26	19'-4	755
8b8	TOP OF SLAB, LONGIT., AT RAIL	—	8	27'-4	584
7b9	TOP OF SLAB, LONGIT., AT RAIL	—	8	37'-6	613
6c1	BOTT. OF SLAB, TRANSV., SIDE "A"	—			
6c2	BOTT. OF SLAB, TRANSV., SIDE "B"	—			
5d1	TOP OF SLAB, TRANSV., SIDE "A"	—			
5d2	TOP OF SLAB, TRANSV., SIDE "B"	—			
8e1	SLAB, TRANSV., AT ABUT., SIDE "A"		20		
8e2	SLAB, TRANSV., AT ABUT., SIDE "B"		20		
6e3	SLAB, HAIRPINS, AT ABUT.	⊓	92		
5h1	PIER CAP HOOPS	⊔		6'-11	
8h2	PIER CAP ENDS	⊂	4	14'-5	154
8h3	PIER CAP, BOTT., LONGIT., SIDE "A"	—	8		
8h4	PIER CAP, BOTT., LONGIT., SIDE "B"	—	8		
8h5	PIER CAP, TOP, LONGIT., SIDE "A"	—	4		
8h6	PIER CAP, TOP, LONGIT., SIDE "B"	—	4		
5j1	TOP OF SLAB, TRANSV., AT RAIL	—		5'-9	
* 5m1-4	WING, VERTICAL	—	32	SHOWN	117
* 5n1	WING, HORIZONTAL	—	24	6'-8	167
5p1	PAVING SUPPORT, TRANSV.	⊏		8'-10	
5p3	PAVING SUPPORT, LONGIT., SIDE "A"	—	6		
5p4	PAVING SUPPORT, LONGIT., SIDE "B"	—	6		
BARRIER RAIL - SEE DESIGN SHEET ???					
REINFORCING STEEL EPOXY COATED TOTAL (LBS)					

* WING REINFORCING MAY BE UNCOATED

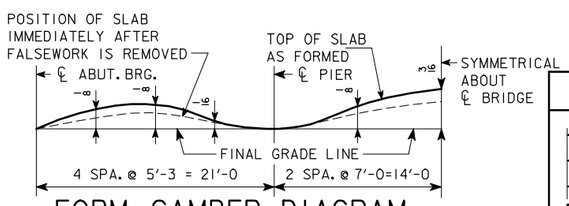

FORM CAMBER DIAGRAM

THIS DIAGRAM SHOWS THE FORM CAMBER REQUIRED TO COMPENSATE FOR THE ANTICIPATED ULTIMATE DEAD LOAD DEFLECTION. THE ABOVE DIMENSIONS DO NOT INCLUDE ANY ALLOWANCE FOR FORM DEFLECTION OR FALSEWORK SETTLEMENT.

BENT BAR DETAILS

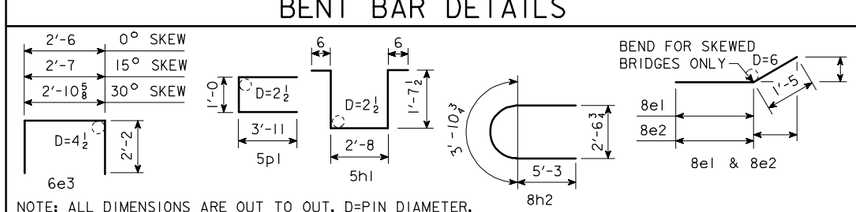

NOTE: ALL DIMENSIONS ARE OUT TO OUT. D=PIN DIAMETER.

ESTIMATED QUANT.-SUPERSTR.

ITEM		UNITS	QUANTITY
STRUCTURAL CONCRETE (BRIDGE)		CU.YDS.	
REINFORCING STEEL, EPOXY COATED		LBS.	
	FURNISH	LIN.FT.	
	DRIVE	LIN.FT.	

STRUCTURAL CONCRETE QUANTITY INCLUDES SLAB WITH INTEGRAL PIER CAPS AND WINGS. FOR TABULATION, SEE "CONCRETE PLACEMENT QUANTITIES-SUPERSTRUCTURE".

IOWA DEPARTMENT OF TRANSPORTATION - HIGHWAY DIVISION
DESIGN SHEET NO. ____ OF ____ FILE NO. _____ DESIGN NO. _____

REVISED 02-05 - PAVING NOTCH BENT BARS AND BAR LIST CHANGED.
ENGLISHCCSBRIDGES.DGN 4448 - 08-12-88

DESIGN TEAM	CONCRETE SLAB, SUPERSTRUCTURE DETAILS-40' ROADWAY-70' BRIDGE	STANDARD SHEET 4448	COUNTY	PROJECT NUMBER	SHEET NUMBER

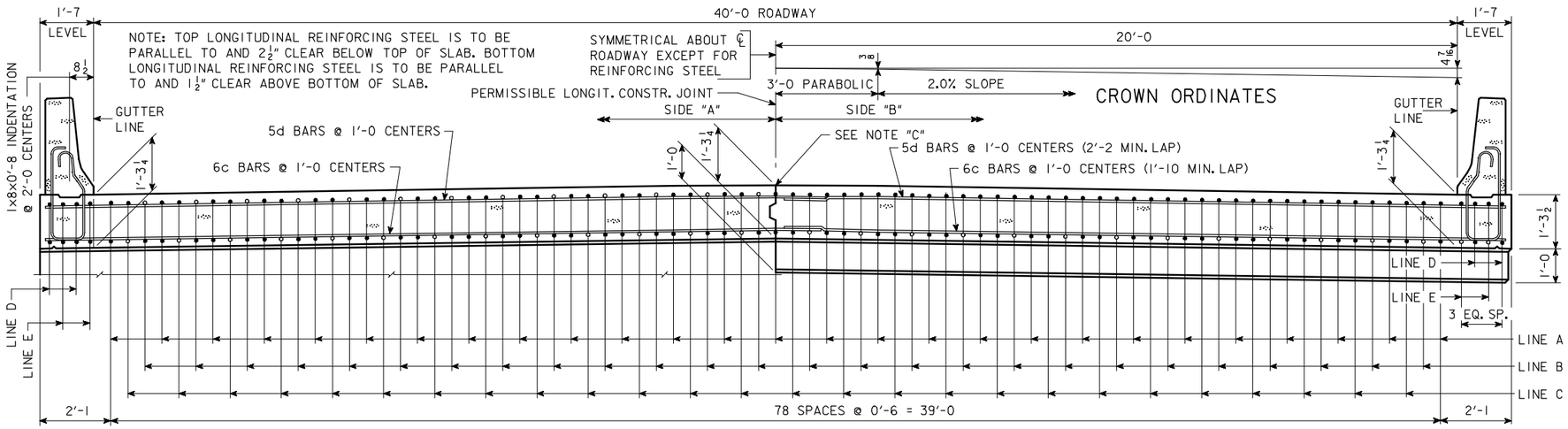

HALF SECTION NEAR ABUTMENT

NOTE "C": IF PERMISSIBLE LONGITUDINAL JOINT IS USED, BARS ON ℄ ROADWAY MAY BE SHIFTED TO CLEAR JOINT BY 1".

SLAB CROSS-SECTIONAL AREA-SIDE "A" =	27.70 SQ. FT.
SLAB CROSS-SECTIONAL AREA-SIDE "B" =	27.70 SQ. FT.
BARRIER RAIL CROSS-SECTIONAL AREA-ONE RAIL =	2.84 SQ. FT.

HALF SECTION NEAR PIER

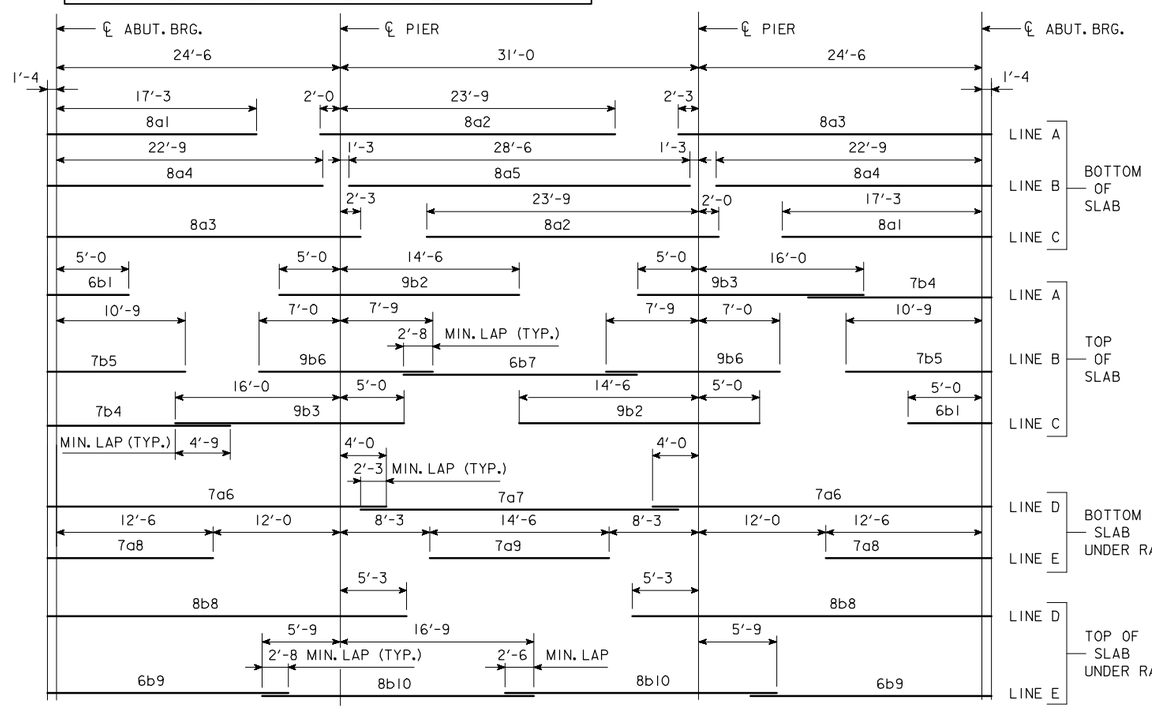

PLACEMENT FOR LONGITUDINAL REINFORCEMENT

EPOXY COATED REINFORCING BAR LIST SUPERSTRUCTURE

BAR	LOCATION	SHAPE	NO.	LENGTH	WEIGHT
8a1	BOTT. OF SLAB, LONGIT.	—	53	18'-7	2630
8a2	BOTT. OF SLAB, LONGIT.	—	53	25'-9	3644
8a3	BOTT. OF SLAB, LONGIT.	—	53	28'-1	3974
8a4	BOTT. OF SLAB, LONGIT.	—	52	24'-1	3344
8a5	BOTT. OF SLAB, LONGIT.	—	26	28'-6	1978
7a6	BOTT. OF SLAB, LONGIT., AT RAIL	—	8	29'-10	488
7a7	BOTT. OF SLAB, LONGIT., AT RAIL	—	4	27'-6	225
7a8	BOTT. OF SLAB, LONGIT., AT RAIL	—	8	13'-10	226
7a9	BOTT. OF SLAB, LONGIT., AT RAIL	—	4	14'-6	119
6b1	TOP OF SLAB, LONGIT.	—	53	6'-4	504
9b2	TOP OF SLAB, LONGIT.	—	53	19'-6	3514
9b3	TOP OF SLAB, LONGIT.	—	53	21'-0	3784
7b4	TOP OF SLAB, LONGIT.	—	53	14'-7	1580
7b5	TOP OF SLAB, LONGIT.	—	52	12'-1	1284
9b6	TOP OF SLAB, LONGIT.	—	52	14'-9	2608
6b7	TOP OF SLAB, LONGIT.	—	26	20'-10	814
8b8	TOP OF SLAB, LONGIT., AT RAIL	—	8	31'-1	664
6b9	TOP OF SLAB, LONGIT., AT RAIL	—	8	22'-9	273
8b10	TOP OF SLAB, LONGIT., AT RAIL	—	8	22'-6	481
6c1	BOTT. OF SLAB, TRANSV., SIDE "A"	—			
6c2	BOTT. OF SLAB, TRANSV., SIDE "B"	—			
5d1	TOP OF SLAB, TRANSV., SIDE "A"	—			
5d2	TOP OF SLAB, TRANSV., SIDE "B"	—			
8e1	SLAB, TRANSV., AT ABUT., SIDE "A"		20		
8e2	SLAB, TRANSV., AT ABUT., SIDE "B"		20		
6e3	SLAB, HAIRPINS, AT ABUT.	⊓	92		
5h1	PIER CAP HOOPS	⊔		7'-1	
8h2	PIER CAP ENDS	⊂	4	14'-5	154
8h3	PIER CAP, BOTT., LONGIT., SIDE "A"	—	8		
8h4	PIER CAP, BOTT., LONGIT., SIDE "B"	—	8		
8h5	PIER CAP, TOP, LONGIT., SIDE "A"	—	4		
8h6	PIER CAP, TOP, LONGIT., SIDE "B"	—	4		
5j1	TOP OF SLAB, TRANSV., AT RAIL	—		5'-6	
* 5m1-4	WING, VERTICAL	—	32	SHOWN	117
* 5n1	WING, HORIZONTAL	—	24	6'-8	167
5p1	PAVING SUPPORT, TRANSV.	⊏		8'-10	
5p3	PAVING SUPPORT, LONGIT., SIDE "A"	—	6		
5p4	PAVING SUPPORT, LONGIT., SIDE "B"	—	6		
BARRIER RAIL - SEE DESIGN SHEET ???					
REINFORCING STEEL EPOXY COATED TOTAL (LBS)					

* WING REINFORCING MAY BE UNCOATED

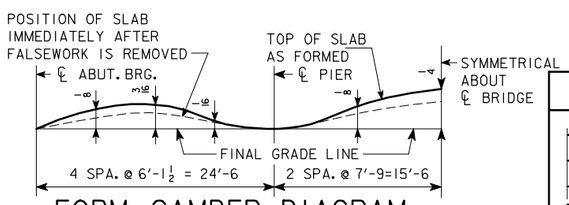

FORM CAMBER DIAGRAM

THIS DIAGRAM SHOWS THE FORM CAMBER REQUIRED TO COMPENSATE FOR THE ANTICIPATED ULTIMATE DEAD LOAD DEFLECTION. THE ABOVE DIMENSIONS DO NOT INCLUDE ANY ALLOWANCE FOR FORM DEFLECTION OR FALSEWORK SETTLEMENT.

BENT BAR DETAILS

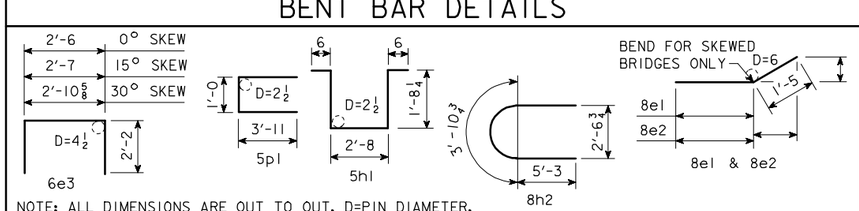

NOTE: ALL DIMENSIONS ARE OUT TO OUT. D=PIN DIAMETER.

ESTIMATED QUANT.-SUPERSTR.

ITEM		UNITS	QUANTITY
STRUCTURAL CONCRETE (BRIDGE)		CU.YDS.	
REINFORCING STEEL, EPOXY COATED		LBS.	
	FURNISH	LIN.FT.	
	DRIVE	LIN.FT.	

STRUCTURAL CONCRETE QUANTITY INCLUDES SLAB WITH INTEGRAL PIER CAPS AND WINGS. FOR TABULATION, SEE "CONCRETE PLACEMENT QUANTITIES-SUPERSTRUCTURE".

IOWA DEPARTMENT OF TRANSPORTATION - HIGHWAY DIVISION
DESIGN SHEET NO. ____ OF ____ FILE NO. _____ DESIGN NO. _____

REVISED 02-05 - PAVING NOTCH BENT BARS AND BAR LIST CHANGED.
ENGLISHCCSBRIDGES.DGN 4449 - 08-12-88

DESIGN TEAM	CONCRETE SLAB, SUPERSTRUCTURE DETAILS-40' ROADWAY-80' BRIDGE	STANDARD SHEET 4449	COUNTY	PROJECT NUMBER	SHEET NUMBER

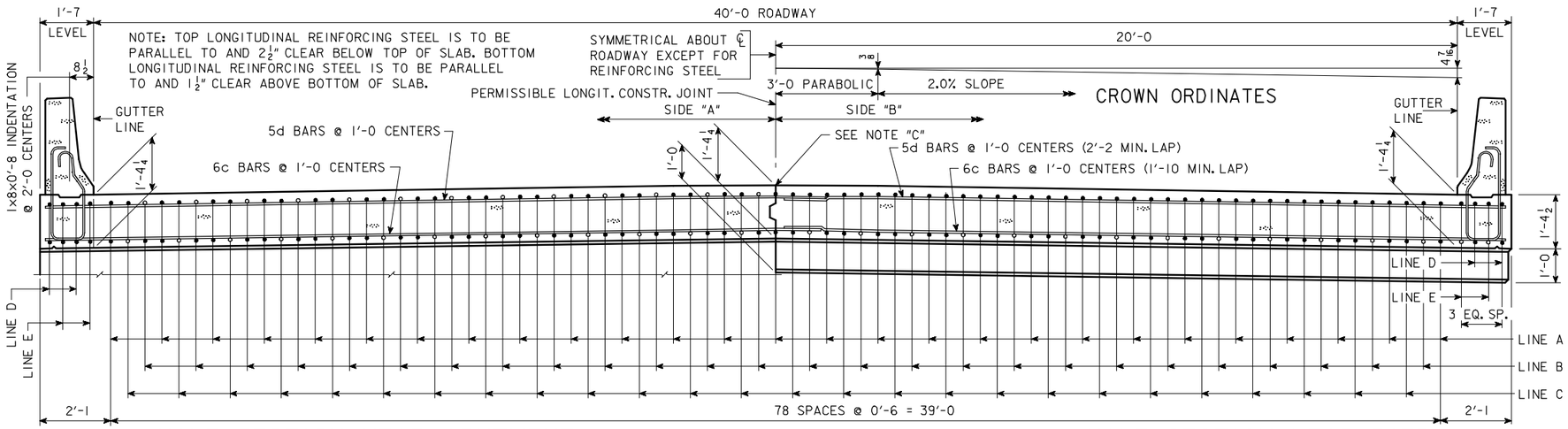

HALF SECTION NEAR ABUTMENT

NOTE "C": IF PERMISSIBLE LONGITUDINAL JOINT IS USED, BARS ON ℄ ROADWAY MAY BE SHIFTED TO CLEAR JOINT BY 1".

SLAB CROSS-SECTIONAL AREA-SIDE "A" =	29.50 SQ. FT.
SLAB CROSS-SECTIONAL AREA-SIDE "B" =	29.50 SQ. FT.
BARRIER RAIL CROSS-SECTIONAL AREA-ONE RAIL =	2.84 SQ. FT.

HALF SECTION NEAR PIER

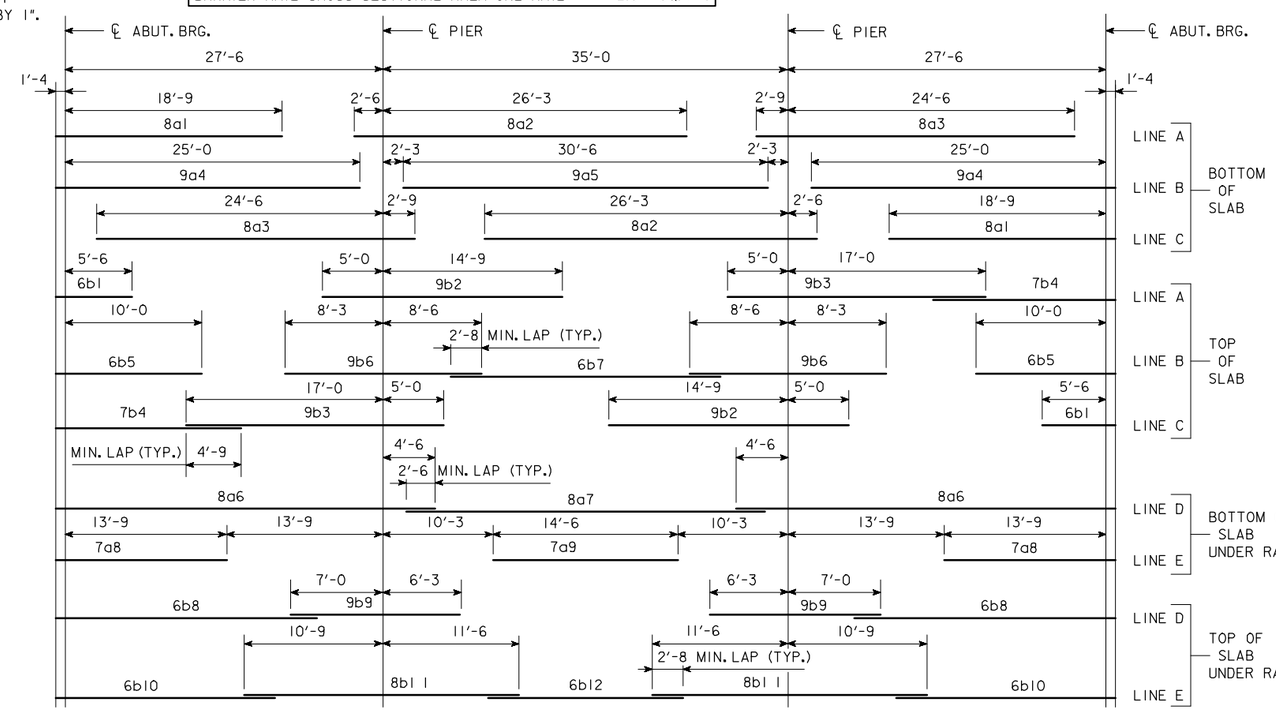

PLACEMENT FOR LONGITUDINAL REINFORCEMENT

* WING REINFORCING MAY BE UNCOATED

EPOXY COATED REINFORCING BAR LIST SUPERSTRUCTURE

BAR	LOCATION	SHAPE	NO.	LENGTH	WEIGHT
8a1	BOTT. OF SLAB, LONGIT.	—	53	20'-1	2842
8a2	BOTT. OF SLAB, LONGIT.	—	53	28'-9	4068
8a3	BOTT. OF SLAB, LONGIT.	—	53	27'-3	3856
9a4	BOTT. OF SLAB, LONGIT.	—	52	26'-4	4656
9a5	BOTT. OF SLAB, LONGIT.	—	26	30'-6	2696
8a6	BOTT. OF SLAB, LONGIT., AT RAIL	—	8	33'-4	712
8a7	BOTT. OF SLAB, LONGIT., AT RAIL	—	4	31'-0	331
7a8	BOTT. OF SLAB, LONGIT., AT RAIL	—	8	15'-1	247
7a9	BOTT. OF SLAB, LONGIT., AT RAIL	—	4	14'-6	119
6b1	TOP OF SLAB, LONGIT.	—	53	6'-10	544
9b2	TOP OF SLAB, LONGIT.	—	53	19'-9	3559
9b3	TOP OF SLAB, LONGIT.	—	53	22'-0	3964
7b4	TOP OF SLAB, LONGIT.	—	53	16'-7	1796
6b5	TOP OF SLAB, LONGIT.	—	52	11'-4	885
9b6	TOP OF SLAB, LONGIT.	—	52	16'-9	2961
6b7	TOP OF SLAB, LONGIT.	—	26	23'-4	911
6b8	TOP OF SLAB, LONGIT., AT RAIL	—	8	24'-6	294
9b9	TOP OF SLAB, LONGIT., AT RAIL	—	8	13'-3	360
6b10	TOP OF SLAB, LONGIT., AT RAIL	—	8	20'-9	249
8b11	TOP OF SLAB, LONGIT., AT RAIL	—	8	22'-3	475
6b12	TOP OF SLAB, LONGIT., AT RAIL	—	4	17'-4	104
6c1	BOTT. OF SLAB, TRANSV., SIDE "A"	—			
6c2	BOTT. OF SLAB, TRANSV., SIDE "B"	—			
5d1	TOP OF SLAB, TRANSV., SIDE "A"	—			
5d2	TOP OF SLAB, TRANSV., SIDE "B"	—			
8e1	SLAB, TRANSV., AT ABUT., SIDE "A"		20		
8e2	SLAB, TRANSV., AT ABUT., SIDE "B"		20		
6e3	SLAB, HAIRPINS, AT ABUT.	⊓	92		
5h1	PIER CAP HOOPS	⊔		7'-3	
8h2	PIER CAP ENDS	⊂	4	14'-5	154
8h3	PIER CAP, BOTT., LONGIT., SIDE "A"	—	8		
8h4	PIER CAP, BOTT., LONGIT., SIDE "B"	—	8		
8h5	PIER CAP, TOP, LONGIT., SIDE "A"	—	4		
8h6	PIER CAP, TOP, LONGIT., SIDE "B"	—	4		
5j1	TOP OF SLAB, TRANSV., AT RAIL	—		4'-9	
* 5m1-4	WING, VERTICAL	—	32	SHOWN	117
* 5n1	WING, HORIZONTAL	═	24	6'-8	167
5p1	PAVING SUPPORT, TRANSV.	⊏		8'-10	
5p3	PAVING SUPPORT, LONGIT., SIDE "A"	—	6		
5p4	PAVING SUPPORT, LONGIT., SIDE "B"	—	6		
	BARRIER RAIL - SEE DESIGN SHEET ???				
	REINFORCING STEEL EPOXY COATED TOTAL (LBS)				

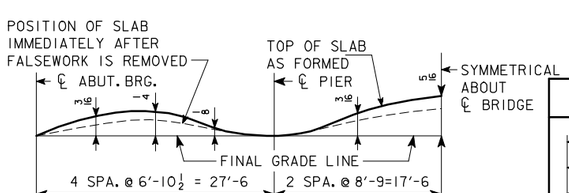

FORM CAMBER DIAGRAM

THIS DIAGRAM SHOWS THE FORM CAMBER REQUIRED TO COMPENSATE FOR THE ANTICIPATED ULTIMATE DEAD LOAD DEFLECTION. THE ABOVE DIMENSIONS DO NOT INCLUDE ANY ALLOWANCE FOR FORM DEFLECTION OR FALSEWORK SETTLEMENT.

BENT BAR DETAILS

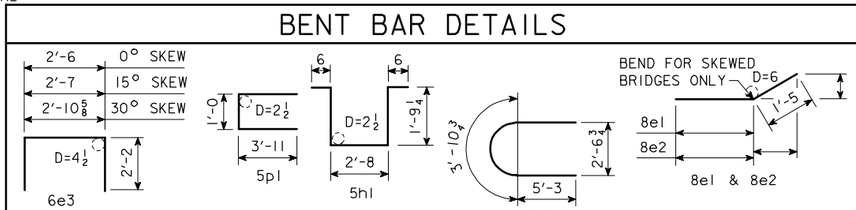

NOTE: ALL DIMENSIONS ARE OUT TO OUT. D=PIN DIAMETER.

ESTIMATED QUANT.-SUPERSTR.

ITEM		UNITS	QUANTITY
STRUCTURAL CONCRETE (BRIDGE)		CU.YDS.	
REINFORCING STEEL, EPOXY COATED		LBS.	
	FURNISH	LIN.FT.	
	DRIVE	LIN.FT.	

STRUCTURAL CONCRETE QUANTITY INCLUDES SLAB WITH INTEGRAL PIER CAPS AND WINGS. FOR TABULATION, SEE "CONCRETE PLACEMENT QUANTITIES-SUPERSTRUCTURE".

IOWA DEPARTMENT OF TRANSPORTATION - HIGHWAY DIVISION
DESIGN SHEET NO. ____ OF ____ FILE NO. _____ DESIGN NO. _____

REVISED 02-05 - PAVING NOTCH BENT BARS AND BAR LIST CHANGED.
ENGLISHCCSBRIDGES.DGN 4450 - 08-12-88

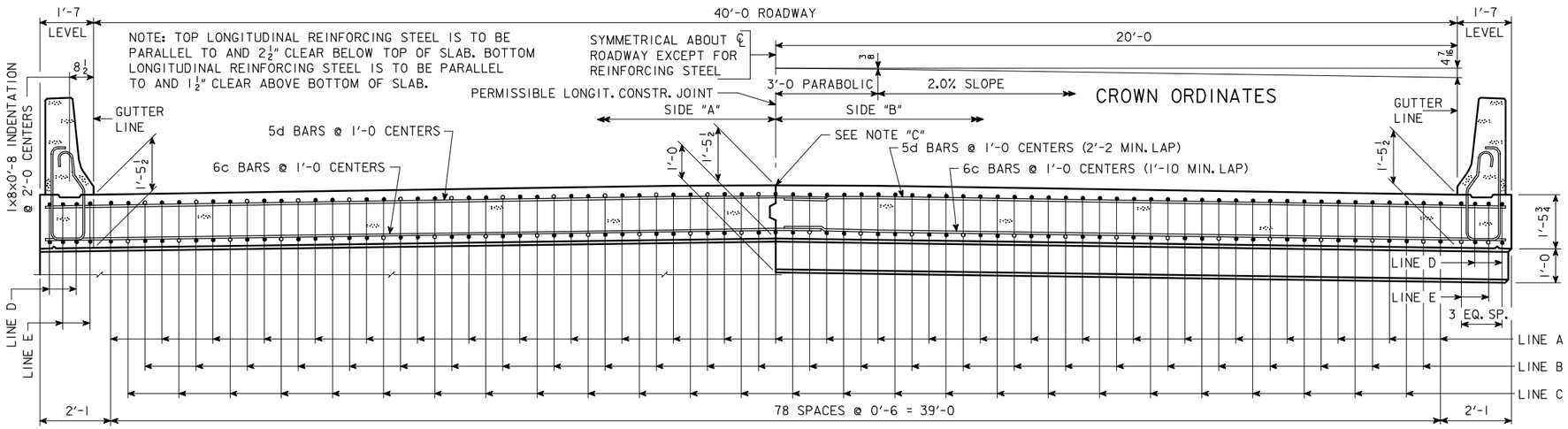

HALF SECTION NEAR ABUTMENT

NOTE "C": IF PERMISSIBLE LONGITUDINAL JOINT IS USED, BARS ON ℄ ROADWAY MAY BE SHIFTED TO CLEAR JOINT BY 1".

SLAB CROSS-SECTIONAL AREA-SIDE "A"	=	31.75 SQ. FT.
SLAB CROSS-SECTIONAL AREA-SIDE "B"	=	31.75 SQ. FT.
BARRIER RAIL CROSS-SECTIONAL AREA-ONE RAIL	=	2.84 SQ. FT.

HALF SECTION NEAR PIER

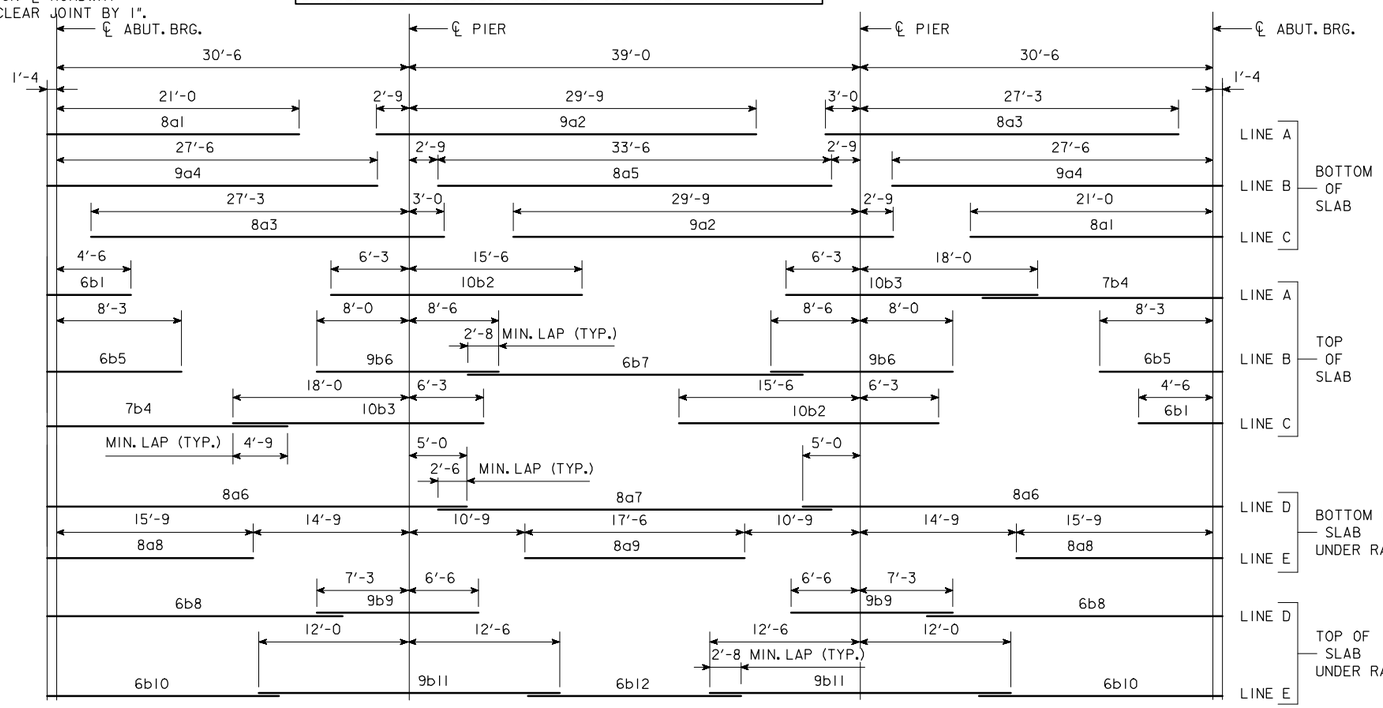

PLACEMENT FOR LONGITUDINAL REINFORCEMENT

* WING REINFORCING MAY BE UNCOATED

EPOXY COATED REINFORCING BAR LIST SUPERSTRUCTURE

BAR	LOCATION	SHAPE	NO.	LENGTH	WEIGHT
8a1	BOTT. OF SLAB, LONGIT.	—	53	22'-4	3160
9a2	BOTT. OF SLAB, LONGIT.	—	53	32'-6	5857
8a3	BOTT. OF SLAB, LONGIT.	—	53	30'-3	4281
9a4	BOTT. OF SLAB, LONGIT.	—	52	28'-10	5098
8a5	BOTT. OF SLAB, LONGIT.	—	26	33'-6	2326
8a6	BOTT. OF SLAB, LONGIT., AT RAIL	—	8	36'-10	787
8a7	BOTT. OF SLAB, LONGIT., AT RAIL	—	4	34'-0	363
8a8	BOTT. OF SLAB, LONGIT., AT RAIL	—	8	17'-1	365
8a9	BOTT. OF SLAB, LONGIT., AT RAIL	—	4	17'-6	187
6b1	TOP OF SLAB, LONGIT.	—	53	5'-10	464
10b2	TOP OF SLAB, LONGIT.	—	53	21'-9	4960
10b3	TOP OF SLAB, LONGIT.	—	53	24'-3	5530
7b4	TOP OF SLAB, LONGIT.	—	53	18'-7	2013
6b5	TOP OF SLAB, LONGIT.	—	52	9'-7	748
9b6	TOP OF SLAB, LONGIT.	—	52	16'-6	2917
6b7	TOP OF SLAB, LONGIT.	—	26	27'-4	1067
6b8	TOP OF SLAB, LONGIT., AT RAIL	—	8	27'-3	327
9b9	TOP OF SLAB, LONGIT., AT RAIL	—	8	13'-9	374
6b10	TOP OF SLAB, LONGIT., AT RAIL	—	8	22'-6	270
9b11	TOP OF SLAB, LONGIT., AT RAIL	—	8	24'-6	666
6b12	TOP OF SLAB, LONGIT., AT RAIL	—	4	19'-4	116
6c1	BOTT. OF SLAB, TRANSV., SIDE "A"	—			
6c2	BOTT. OF SLAB, TRANSV., SIDE "B"	—			
5d1	TOP OF SLAB, TRANSV., SIDE "A"	—			
5d2	TOP OF SLAB, TRANSV., SIDE "B"	—			
8e1	SLAB, TRANSV., AT ABUT., SIDE "A"		20		
8e2	SLAB, TRANSV., AT ABUT., SIDE "B"		20		
6e3	SLAB, HAIRPINS, AT ABUT.		92		
5h1	PIER CAP HOOPS			7'-5	
8h2	PIER CAP ENDS		4	14'-5	154
8h3	PIER CAP, BOTT., LONGIT., SIDE "A"	—	8		
8h4	PIER CAP, BOTT., LONGIT., SIDE "B"	—	8		
8h5	PIER CAP, TOP, LONGIT., SIDE "A"	—	4		
8h6	PIER CAP, TOP, LONGIT., SIDE "B"	—	4		
5j1	TOP OF SLAB, TRANSV., AT RAIL	—		4'-6	
* 5m1-4	WING, VERTICAL	—	32	SHOWN	117
* 5n1	WING, HORIZONTAL	—	24	6'-8	167
5p1	PAVING SUPPORT, TRANSV.			8'-10	
5p3	PAVING SUPPORT, LONGIT., SIDE "A"	—	6		
5p4	PAVING SUPPORT, LONGIT., SIDE "B"	—	6		
BARRIER RAIL - SEE DESIGN SHEET ???					
REINFORCING STEEL EPOXY COATED TOTAL (LBS)					

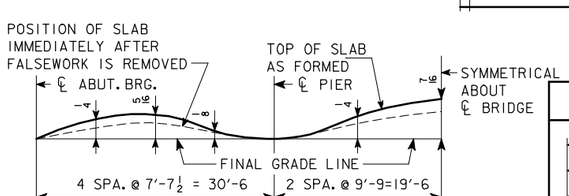

FORM CAMBER DIAGRAM

THIS DIAGRAM SHOWS THE FORM CAMBER REQUIRED TO COMPENSATE FOR THE ANTICIPATED ULTIMATE DEAD LOAD DEFLECTION. THE ABOVE DIMENSIONS DO NOT INCLUDE ANY ALLOWANCE FOR FORM DEFLECTION OR FALSEWORK SETTLEMENT.

BENT BAR DETAILS

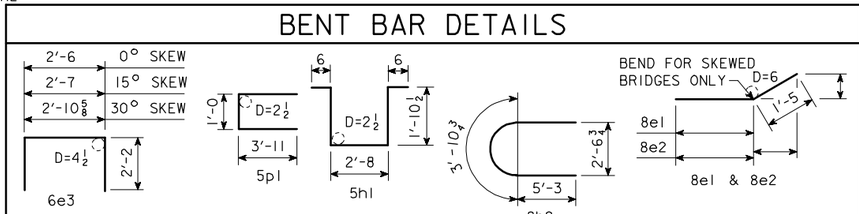

NOTE: ALL DIMENSIONS ARE OUT TO OUT. D=PIN DIAMETER.

ESTIMATED QUANT.-SUPERSTR.

ITEM		UNITS	QUANTITY
STRUCTURAL CONCRETE (BRIDGE)		CU.YDS.	
REINFORCING STEEL, EPOXY COATED		LBS.	
	FURNISH	LIN.FT.	
	DRIVE	LIN.FT.	

STRUCTURAL CONCRETE QUANTITY INCLUDES SLAB WITH INTEGRAL PIER CAPS AND WINGS. FOR TABULATION, SEE "CONCRETE PLACEMENT QUANTITIES-SUPERSTRUCTURE".

IOWA DEPARTMENT OF TRANSPORTATION - HIGHWAY DIVISION
DESIGN SHEET NO. ____ OF ____ FILE NO. _____ DESIGN NO. _____

REVISED 02-05 - PAVING NOTCH BENT BARS AND BAR LIST CHANGED.
ENGLISHCCSBRIDGES.DGN 4451 - 08-12-88

DESIGN TEAM	CONCRETE SLAB, SUPERSTRUCTURE DETAILS-40' ROADWAY-100' BRIDGE	STANDARD SHEET 4451	COUNTY	PROJECT NUMBER	SHEET NUMBER

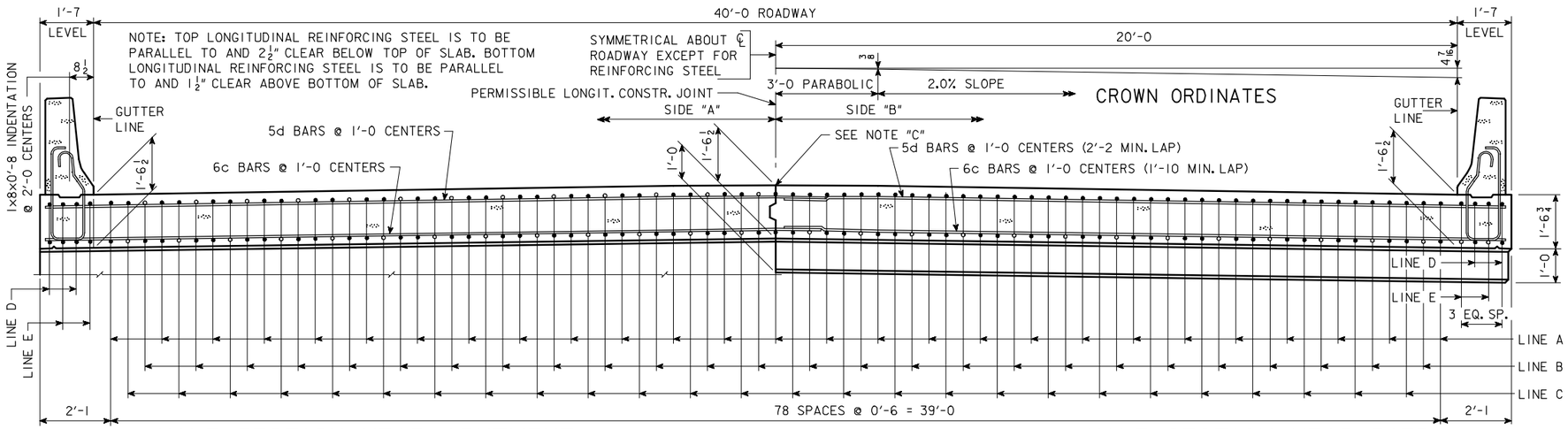

HALF SECTION NEAR ABUTMENT

NOTE "C": IF PERMISSIBLE LONGITUDINAL JOINT IS USED, BARS ON ℄ ROADWAY MAY BE SHIFTED TO CLEAR JOINT BY 1".

SLAB CROSS-SECTIONAL AREA-SIDE "A" =	33.55 SQ. FT.
SLAB CROSS-SECTIONAL AREA-SIDE "B" =	33.55 SQ. FT.
BARRIER RAIL CROSS-SECTIONAL AREA-ONE RAIL =	2.84 SQ. FT.

HALF SECTION NEAR PIER

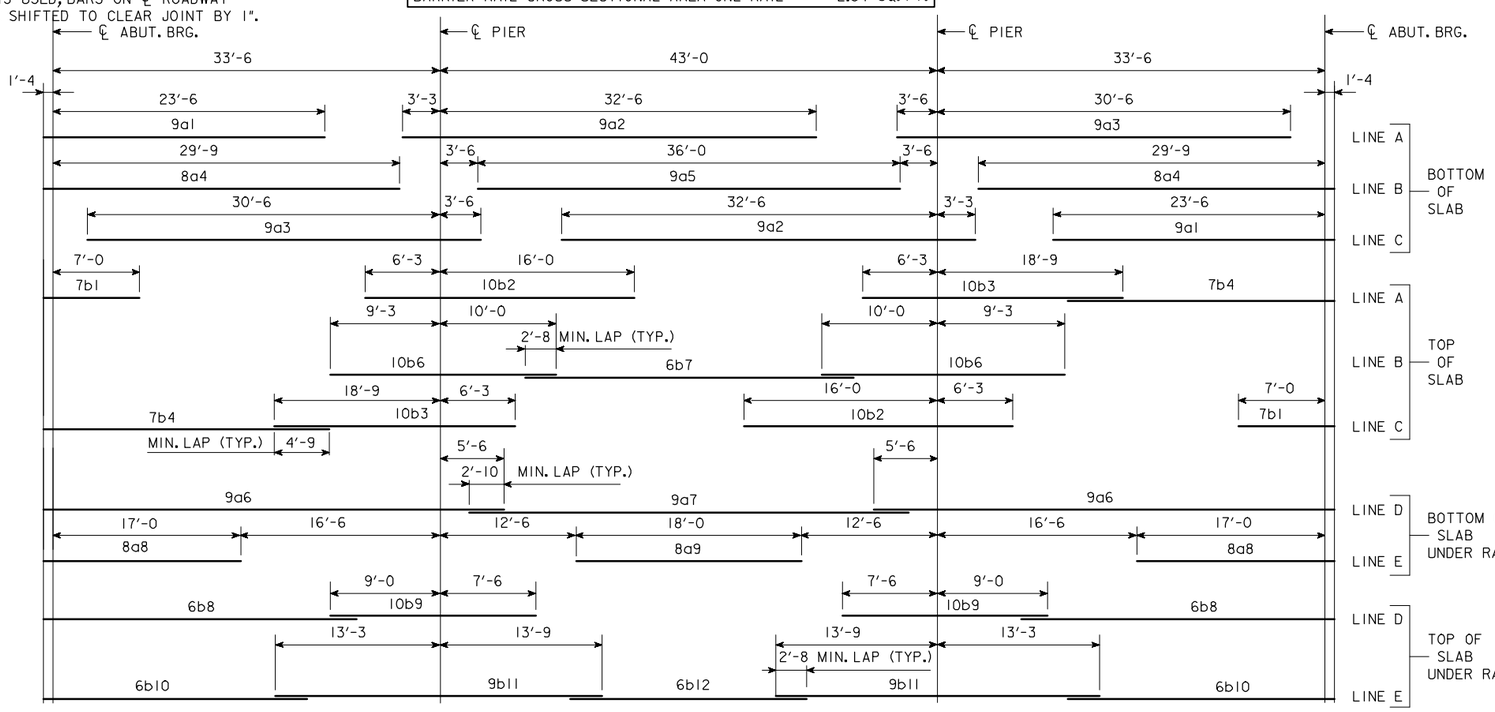

PLACEMENT FOR LONGITUDINAL REINFORCEMENT

* WING REINFORCING MAY BE UNCOATED

EPOXY COATED REINFORCING BAR LIST SUPERSTRUCTURE

BAR	LOCATION	SHAPE	NO.	LENGTH	WEIGHT
9a1	BOTT. OF SLAB, LONGIT.	—	53	24'-10	4475
9a2	BOTT. OF SLAB, LONGIT.	—	53	35'-9	6442
9a3	BOTT. OF SLAB, LONGIT.	—	53	34'-0	6127
8a4	BOTT. OF SLAB, LONGIT.	—	52	31'-1	4316
9a5	BOTT. OF SLAB, LONGIT.	—	26	36'-0	3182
9a6	BOTT. OF SLAB, LONGIT., AT RAIL	—	8	40'-4	1097
9a7	BOTT. OF SLAB, LONGIT., AT RAIL	—	4	37'-8	512
8a8	BOTT. OF SLAB, LONGIT., AT RAIL	—	8	18'-4	392
8a9	BOTT. OF SLAB, LONGIT., AT RAIL	—	4	18'-0	192
7b1	TOP OF SLAB, LONGIT.	—	53	8'-4	903
10b2	TOP OF SLAB, LONGIT.	—	53	22'-3	5074
10b3	TOP OF SLAB, LONGIT.	—	53	25'-0	5701
7b4	TOP OF SLAB, LONGIT.	—	53	20'-10	2257
		—			
10b6	TOP OF SLAB, LONGIT.	—	52	19'-3	4307
6b7	TOP OF SLAB, LONGIT.	—	26	28'-4	1106
6b8	TOP OF SLAB, LONGIT., AT RAIL	—	8	28'-6	342
10b9	TOP OF SLAB, LONGIT., AT RAIL	—	8	16'-6	568
6b10	TOP OF SLAB, LONGIT., AT RAIL	—	8	24'-3	291
9b11	TOP OF SLAB, LONGIT., AT RAIL	—	8	27'-0	734
6b12	TOP OF SLAB, LONGIT., AT RAIL	—	4	20'-10	125
6c1	BOTT. OF SLAB, TRANSV., SIDE "A"	—			
6c2	BOTT. OF SLAB, TRANSV., SIDE "B"	—			
5d1	TOP OF SLAB, TRANSV., SIDE "A"	—			
5d2	TOP OF SLAB, TRANSV., SIDE "B"	—			
8e1	SLAB, TRANSV., AT ABUT., SIDE "A"		20		
8e2	SLAB, TRANSV., AT ABUT., SIDE "B"		20		
6e3	SLAB, HAIRPINS, AT ABUT.	⊓	92		
5h1	PIER CAP HOOPS	⊔		7'-7	
8h2	PIER CAP ENDS	⊂	4	14'-5	154
8h3	PIER CAP, BOTT., LONGIT., SIDE "A"	—	8		
8h4	PIER CAP, BOTT., LONGIT., SIDE "B"	—	8		
8h5	PIER CAP, TOP, LONGIT., SIDE "A"	—	4		
8h6	PIER CAP, TOP, LONGIT., SIDE "B"	—	4		
5j1	TOP OF SLAB, TRANSV., AT RAIL	—		4'-0	
* 5m1-4	WING, VERTICAL	—	32	SHOWN	117
* 5n1	WING, HORIZONTAL	—	24	6'-8	167
5p1	PAVING SUPPORT, TRANSV.	⊏		8'-10	
5p3	PAVING SUPPORT, LONGIT., SIDE "A"	—	6		
5p4	PAVING SUPPORT, LONGIT., SIDE "B"	—	6		
BARRIER RAIL - SEE DESIGN SHEET ???					
REINFORCING STEEL EPOXY COATED TOTAL (LBS)					

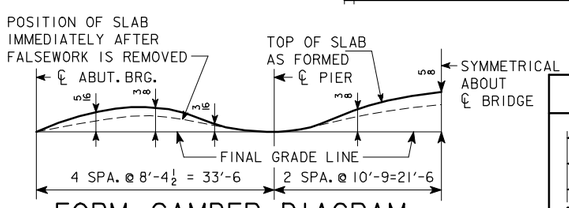

FORM CAMBER DIAGRAM

THIS DIAGRAM SHOWS THE FORM CAMBER REQUIRED TO COMPENSATE FOR THE ANTICIPATED ULTIMATE DEAD LOAD DEFLECTION. THE ABOVE DIMENSIONS DO NOT INCLUDE ANY ALLOWANCE FOR FORM DEFLECTION OR FALSEWORK SETTLEMENT.

BENT BAR DETAILS

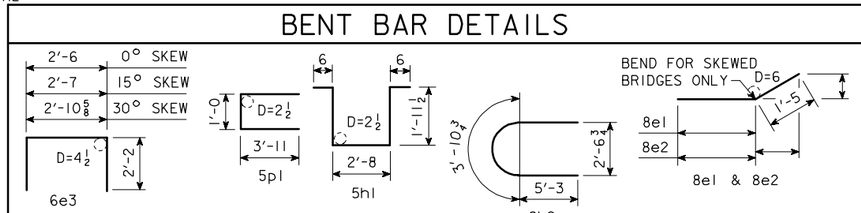

NOTE: ALL DIMENSIONS ARE OUT TO OUT. D=PIN DIAMETER.

ESTIMATED QUANT.-SUPERSTR.

ITEM		UNITS	QUANTITY
STRUCTURAL CONCRETE (BRIDGE)		CU.YDS.	
REINFORCING STEEL, EPOXY COATED		LBS.	
	FURNISH	LIN.FT.	
	DRIVE	LIN.FT.	

STRUCTURAL CONCRETE QUANTITY INCLUDES SLAB WITH INTEGRAL PIER CAPS AND WINGS. FOR TABULATION, SEE "CONCRETE PLACEMENT QUANTITIES-SUPERSTRUCTURE".

IOWA DEPARTMENT OF TRANSPORTATION - HIGHWAY DIVISION
DESIGN SHEET NO. ____ OF ____ FILE NO. _____ DESIGN NO. _____

REVISED 02-05 - PAVING NOTCH BENT BARS AND BAR LIST CHANGED.
ENGLISHCCSBRIDGES.DGN 4452 - 08-12-88

DESIGN TEAM	CONCRETE SLAB, SUPERSTRUCTURE DETAILS-40' ROADWAY-110' BRIDGE	STANDARD SHEET 4452	COUNTY	PROJECT NUMBER	SHEET NUMBER

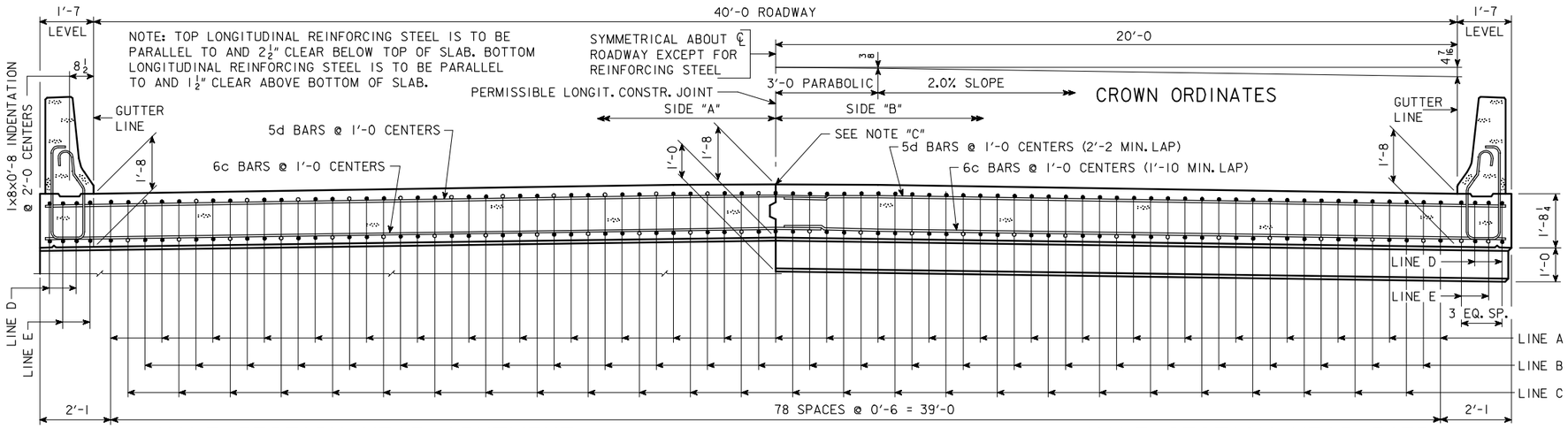

HALF SECTION NEAR ABUTMENT

HALF SECTION NEAR PIER

NOTE "C": IF PERMISSIBLE LONGITUDINAL JOINT IS USED, BARS ON ℄ ROADWAY MAY BE SHIFTED TO CLEAR JOINT BY 1".

SLAB CROSS-SECTIONAL AREA-SIDE "A" =	36.25 SQ. FT.
SLAB CROSS-SECTIONAL AREA-SIDE "B" =	36.25 SQ. FT.
BARRIER RAIL CROSS-SECTIONAL AREA-ONE RAIL =	2.84 SQ. FT.

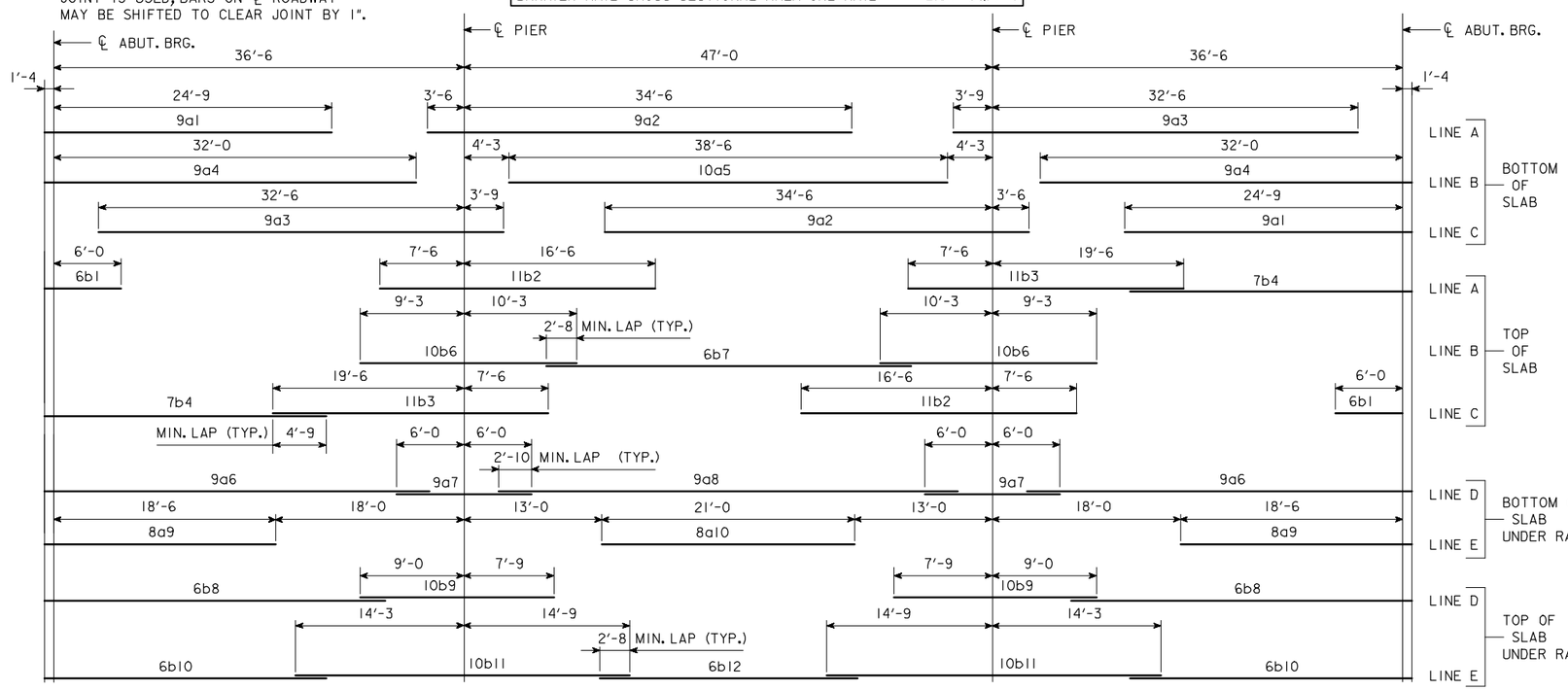

PLACEMENT FOR LONGITUDINAL REINFORCEMENT

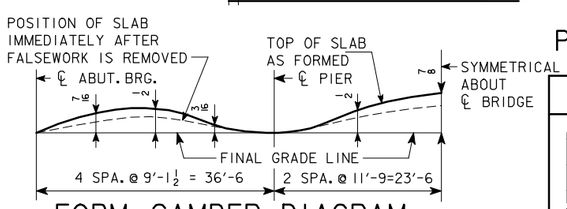

FORM CAMBER DIAGRAM

THIS DIAGRAM SHOWS THE FORM CAMBER REQUIRED TO COMPENSATE FOR THE ANTICIPATED ULTIMATE DEAD LOAD DEFLECTION. THE ABOVE DIMENSIONS DO NOT INCLUDE ANY ALLOWANCE FOR FORM DEFLECTION OR FALSEWORK SETTLEMENT.

BENT BAR DETAILS

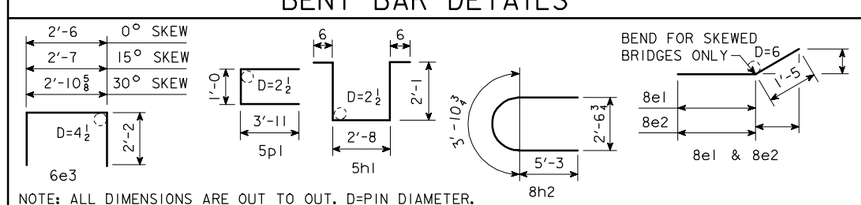

NOTE: ALL DIMENSIONS ARE OUT TO OUT. D=PIN DIAMETER.

ESTIMATED QUANT.-SUPERSTR.

ITEM		UNITS	QUANTITY
STRUCTURAL CONCRETE (BRIDGE)		CU.YDS.	
REINFORCING STEEL, EPOXY COATED		LBS.	
	FURNISH	LIN.FT.	
	DRIVE	LIN.FT.	

STRUCTURAL CONCRETE QUANTITY INCLUDES SLAB WITH INTEGRAL PIER CAPS AND WINGS. FOR TABULATION, SEE "CONCRETE PLACEMENT QUANTITIES-SUPERSTRUCTURE".

EPOXY COATED REINFORCING BAR LIST SUPERSTRUCTURE

BAR	LOCATION	SHAPE	NO.	LENGTH	WEIGHT
9a1	BOTT. OF SLAB, LONGIT.	—	53	26'-1	4700
9a2	BOTT. OF SLAB, LONGIT.	—	53	38'-0	6848
9a3	BOTT. OF SLAB, LONGIT.	—	53	36'-3	6532
9a4	BOTT. OF SLAB, LONGIT.	—	52	33'-4	5893
10a5	BOTT. OF SLAB, LONGIT.	—	26	38'-6	4307
9a6	BOTT. OF SLAB, LONGIT., AT RAIL	—	8	34'-8	943
9a7	BOTT. OF SLAB, LONGIT., AT RAIL	—	8	12'-0	326
9a8	BOTT. OF SLAB, LONGIT., AT RAIL	—	4	40'-8	553
8a9	BOTT. OF SLAB, LONGIT., AT RAIL	—	8	19'-10	424
8a10	BOTT. OF SLAB, LONGIT., AT RAIL	—	4	21'-0	224
6b1	TOP OF SLAB, LONGIT.	—	53	7'-4	584
11b2	TOP OF SLAB, LONGIT.	—	53	24'-0	6758
11b3	TOP OF SLAB, LONGIT.	—	53	27'-0	7603
7b4	TOP OF SLAB, LONGIT.	—	53	23'-1	2501
		—			
10b6	TOP OF SLAB, LONGIT.	—	52	19'-6	4363
6b7	TOP OF SLAB, LONGIT.	—	26	31'-10	1243
6b8	TOP OF SLAB, LONGIT., AT RAIL	—	8	31'-6	379
10b9	TOP OF SLAB, LONGIT., AT RAIL	—	8	16'-9	577
6b10	TOP OF SLAB, LONGIT., AT RAIL	—	8	26'-3	315
10b11	TOP OF SLAB, LONGIT., AT RAIL	—	8	29'-0	998
6b12	TOP OF SLAB, LONGIT., AT RAIL	—	4	22'-10	137
6c1	BOTT. OF SLAB, TRANSV., SIDE "A"	—			
6c2	BOTT. OF SLAB, TRANSV., SIDE "B"	—			
5d1	TOP OF SLAB, TRANSV., SIDE "A"	—			
5d2	TOP OF SLAB, TRANSV., SIDE "B"	—			
8e1	SLAB, TRANSV., AT ABUT., SIDE "A"		20		
8e2	SLAB, TRANSV., AT ABUT., SIDE "B"		20		
6e3	SLAB, HAIRPINS, AT ABUT.		92		
5h1	PIER CAP HOOPS			7'-10	
8h2	PIER CAP ENDS		4	14'-5	154
8h3	PIER CAP, BOTT., LONGIT., SIDE "A"	—	8		
8h4	PIER CAP, BOTT., LONGIT., SIDE "B"	—	8		
8h5	PIER CAP, TOP, LONGIT., SIDE "A"	—	4		
8h6	PIER CAP, TOP, LONGIT., SIDE "B"	—	4		
5j1	TOP OF SLAB, TRANSV., AT RAIL	—		3'-9	
* 5m1-4	WING, VERTICAL	—	32	SHOWN	117
* 5n1	WING, HORIZONTAL	—	24	6'-8	167
5p1	PAVING SUPPORT, TRANSV.			8'-10	
5p3	PAVING SUPPORT, LONGIT., SIDE "A"	—	6		
5p4	PAVING SUPPORT, LONGIT., SIDE "B"	—	6		
BARRIER RAIL - SEE DESIGN SHEET ???					
REINFORCING STEEL EPOXY COATED TOTAL (LBS)					

* WING REINFORCING MAY BE UNCOATED

IOWA DEPARTMENT OF TRANSPORTATION - HIGHWAY DIVISION
DESIGN SHEET NO. ____ OF ____ FILE NO. _____ DESIGN NO. _____

REVISED 02-05 - PAVING NOTCH BENT BARS AND BAR LIST CHANGED.
ENGLISHCCSBRIDGES.DGN 4453 - 08-12-88

DESIGN TEAM	CONCRETE SLAB, SUPERSTRUCTURE DETAILS-40' ROADWAY-120' BRIDGE	STANDARD SHEET 4453	COUNTY	PROJECT NUMBER	SHEET NUMBER

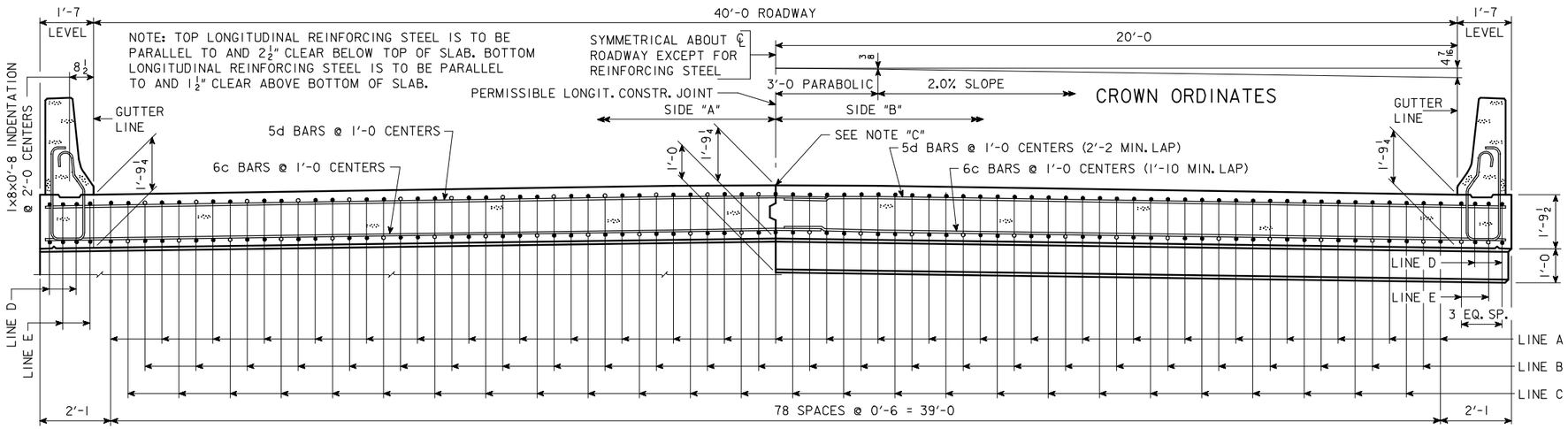

HALF SECTION NEAR ABUTMENT

NOTE "C": IF PERMISSIBLE LONGITUDINAL JOINT IS USED, BARS ON ℄ ROADWAY MAY BE SHIFTED TO CLEAR JOINT BY 1".

SLAB CROSS-SECTIONAL AREA-SIDE "A" =	38.49 SQ. FT.
SLAB CROSS-SECTIONAL AREA-SIDE "B" =	38.49 SQ. FT.
BARRIER RAIL CROSS-SECTIONAL AREA-ONE RAIL =	2.84 SQ. FT.

HALF SECTION NEAR PIER

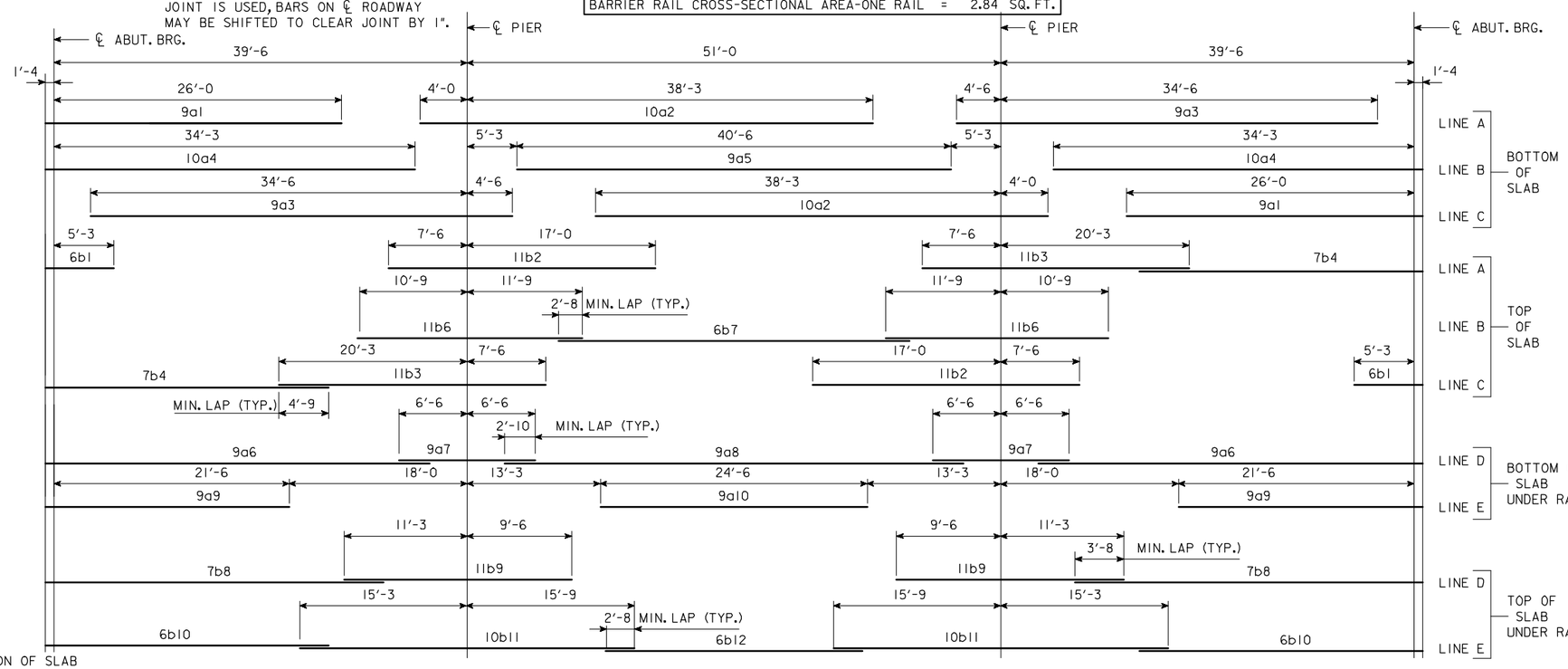

* WING REINFORCING MAY BE UNCOATED

EPOXY COATED REINFORCING BAR LIST SUPERSTRUCTURE

BAR	LOCATION	SHAPE	NO.	LENGTH	WEIGHT
9a1	BOTT. OF SLAB, LONGIT.	—	53	27'-4	4925
10a2	BOTT. OF SLAB, LONGIT.	—	53	42'-3	9635
9a3	BOTT. OF SLAB, LONGIT.	—	53	39'-0	7028
10a4	BOTT. OF SLAB, LONGIT.	—	52	35'-7	7962
9a5	BOTT. OF SLAB, LONGIT.	—	26	40'-6	3580
9a6	BOTT. OF SLAB, LONGIT., AT RAIL	—	8	37'-2	1011
9a7	BOTT. OF SLAB, LONGIT., AT RAIL	—	8	13'-0	354
9a8	BOTT. OF SLAB, LONGIT., AT RAIL	—	4	43'-8	594
9a9	BOTT. OF SLAB, LONGIT., AT RAIL	—	8	22'-10	621
9a10	BOTT. OF SLAB, LONGIT., AT RAIL	—	4	24'-6	333
6b1	TOP OF SLAB, LONGIT.	—	53	6'-7	524
11b2	TOP OF SLAB, LONGIT.	—	53	24'-6	6899
11b3	TOP OF SLAB, LONGIT.	—	53	27'-9	7814
7b4	TOP OF SLAB, LONGIT.	—	53	25'-4	2744
		—			
11b6	TOP OF SLAB, LONGIT.	—	52	22'-6	6216
6b7	TOP OF SLAB, LONGIT.	—	26	32'-10	1282
7b8	TOP OF SLAB, LONGIT., AT RAIL	—	8	33'-3	544
11b9	TOP OF SLAB, LONGIT., AT RAIL	—	8	20'-9	882
6b10	TOP OF SLAB, LONGIT., AT RAIL	—	8	28'-3	339
10b11	TOP OF SLAB, LONGIT., AT RAIL	—	8	31'-0	1067
6b12	TOP OF SLAB, LONGIT., AT RAIL	—	4	24'-10	149
6c1	BOTT. OF SLAB, TRANSV., SIDE "A"	—			
6c2	BOTT. OF SLAB, TRANSV., SIDE "B"	—			
5d1	TOP OF SLAB, TRANSV., SIDE "A"	—			
5d2	TOP OF SLAB, TRANSV., SIDE "B"	—			
8e1	SLAB, TRANSV., AT ABUT., SIDE "A"		20		
8e2	SLAB, TRANSV., AT ABUT., SIDE "B"		20		
6e3	SLAB, HAIRPINS, AT ABUT.		92		
5h1	PIER CAP HOOPS			8'-1	
8h2	PIER CAP ENDS		4	14'-5	154
8h3	PIER CAP, BOTT., LONGIT., SIDE "A"	—	8		
8h4	PIER CAP, BOTT., LONGIT., SIDE "B"	—	8		
8h5	PIER CAP, TOP, LONGIT., SIDE "A"	—	4		
8h6	PIER CAP, TOP, LONGIT., SIDE "B"	—	4		
5j1	TOP OF SLAB, TRANSV., AT RAIL	—		3'-6	
* 5m1-4	WING, VERTICAL	—	32	SHOWN	117
* 5n1	WING, HORIZONTAL	—	24	6'-8	167
5p1	PAVING SUPPORT, TRANSV.			8'-10	
5p3	PAVING SUPPORT, LONGIT., SIDE "A"	—	6		
5p4	PAVING SUPPORT, LONGIT., SIDE "B"	—	6		
BARRIER RAIL - SEE DESIGN SHEET ???					
REINFORCING STEEL EPOXY COATED TOTAL (LBS)					

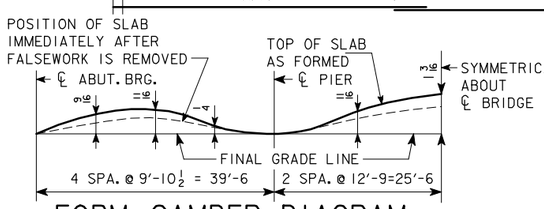

FORM CAMBER DIAGRAM

THIS DIAGRAM SHOWS THE FORM CAMBER REQUIRED TO COMPENSATE FOR THE ANTICIPATED ULTIMATE DEAD LOAD DEFLECTION. THE ABOVE DIMENSIONS DO NOT INCLUDE ANY ALLOWANCE FOR FORM DEFLECTION OR FALSEWORK SETTLEMENT.

BENT BAR DETAILS

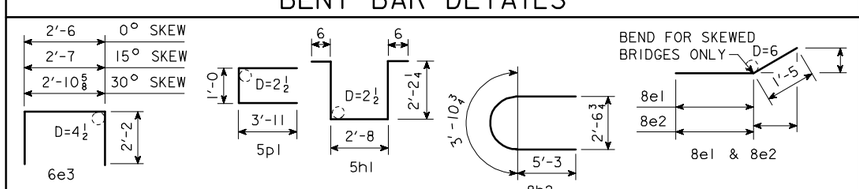

NOTE: ALL DIMENSIONS ARE OUT TO OUT. D=PIN DIAMETER.

ESTIMATED QUANT.-SUPERSTR.

ITEM		UNITS	QUANTITY
STRUCTURAL CONCRETE (BRIDGE)		CU.YDS.	
REINFORCING STEEL, EPOXY COATED		LBS.	
	FURNISH	LIN.FT.	
	DRIVE	LIN.FT.	

STRUCTURAL CONCRETE QUANTITY INCLUDES SLAB WITH INTEGRAL PIER CAPS AND WINGS. FOR TABULATION, SEE "CONCRETE PLACEMENT QUANTITIES-SUPERSTRUCTURE".

IOWA DEPARTMENT OF TRANSPORTATION - HIGHWAY DIVISION
DESIGN SHEET NO. ____ OF ____ FILE NO. _____ DESIGN NO. _____

REVISED 02-05 - PAVING NOTCH BENT BARS AND BAR LIST CHANGED.
ENGLISHCCSBRIDGES.DGN 4454 - 08-12-88

DESIGN TEAM	CONCRETE SLAB, SUPERSTRUCTURE DETAILS-40' ROADWAY-130' BRIDGE	STANDARD SHEET 4454	COUNTY	PROJECT NUMBER	SHEET NUMBER

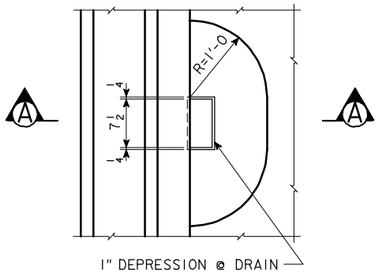

PART PLAN

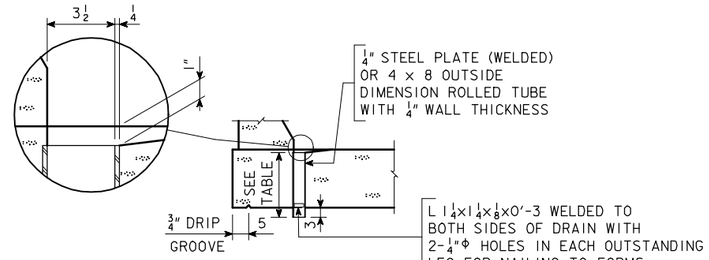

SECTION A-A

DRAIN DETAILS

NOTE: DRAINS ARE TO BE GALVANIZED. ?? DRAINS REQUIRED, SEE "SITUATION PLAN" FOR LOCATION. WEIGHT IS BASED ON WELDED PLATE. COST OF DRAINS TO BE INCLUDED IN PRICE BID FOR CONCRETE.

BRIDGE LENGTH	LENGTH OF DRAIN	WEIGHT LBS./DRAIN
70'-0	1'-4 1/2	27
80'-0	1'-5 1/4	28
90'-0	1'-6 1/4	30
100'-0	1'-7 1/2	32
110'-0	1'-8 1/2	33
120'-0	1'-10	36
130'-0	1'-11 1/4	38

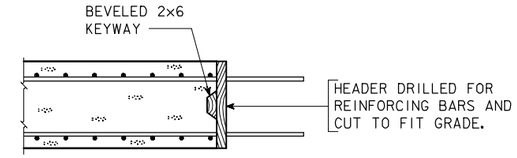

LONGITUDINAL CONSTR. JOINT

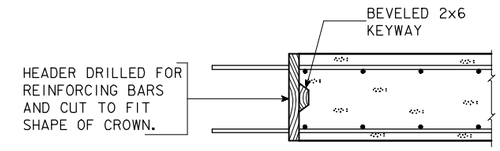

TRANSVERSE CONSTR. JOINT

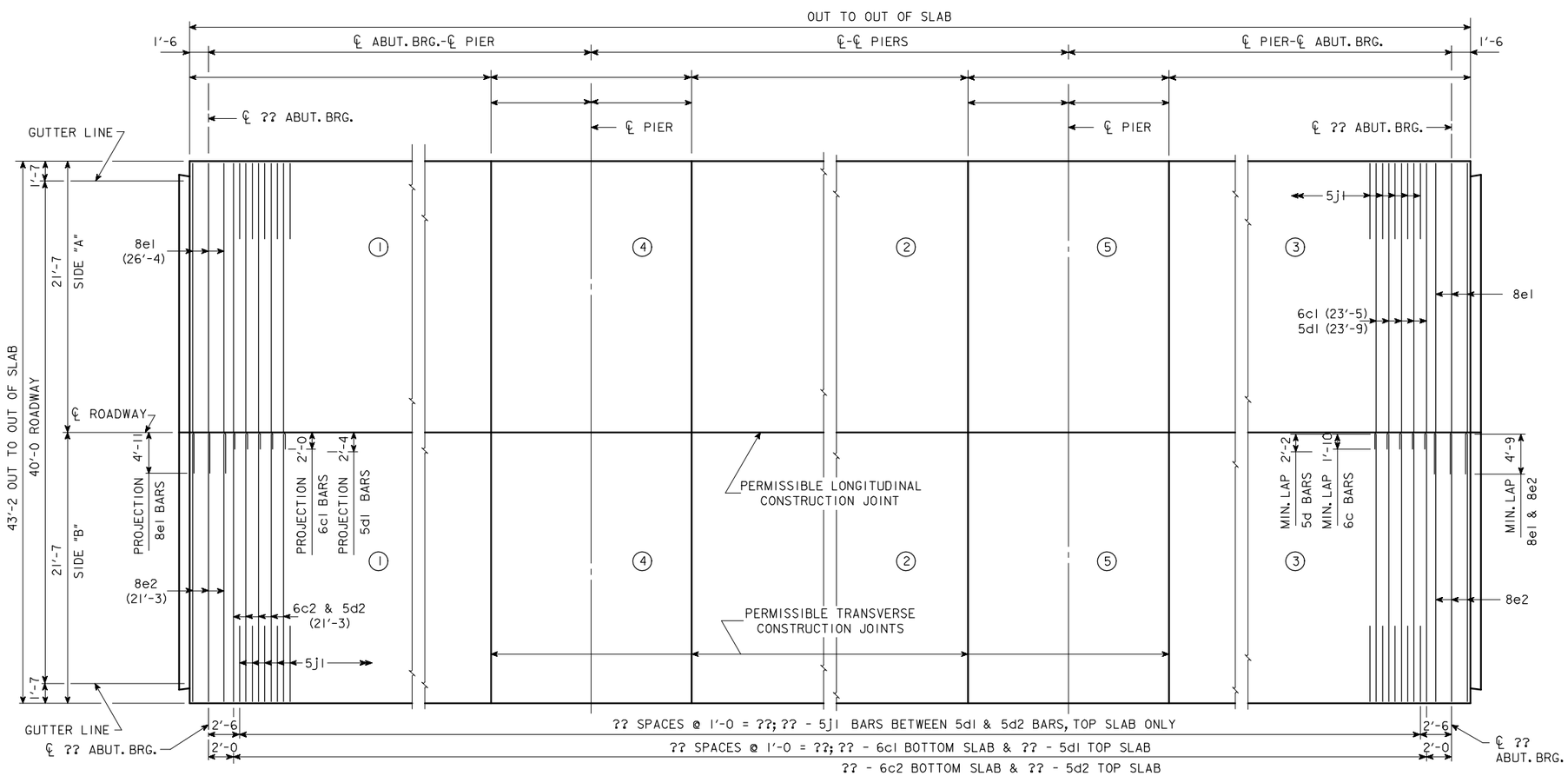

TRANSVERSE REINFORCING STEEL LAYOUT & CONCRETE PLACEMENT DIAGRAM

NOTE: ENCIRCLED NUMBERS DO NOT INDICATE SEQUENCE OF CONCRETE PLACEMENT. (SEE SUPERSTRUCTURE NOTES)

CONCRETE PLACEMENT QUANT.-SUPERSTR.

LOCATION	SIDE "A"	SIDE "B"	TOTAL
SLAB SECTION 1			
SLAB SECTION 2			
SLAB SECTION 3			
SLAB SECTION 4			
SLAB SECTION 5			
WINGS	4 AT 0.65 CU. YDS.		2.6
		TOTAL CU. YDS.	

IOWA DEPARTMENT OF TRANSPORTATION - HIGHWAY DIVISION
DESIGN SHEET NO. ____ OF ____ FILE NO. _____ DESIGN NO. _____

REVISED 07-05 - PAVING NOTCH EXTENDED TO INTERCEPT THE WINGS.
ENGLISHCCSBRIDGES.DGN 4455 - 08-12-88

DESIGN TEAM	CONCRETE SLAB, PLACEMENT DIAGRAM - 40' ROADWAY - 0° SKEW	STANDARD SHEET 4455	COUNTY	PROJECT NUMBER	SHEET NUMBER

09-FEB-2006 10:40 ajeffer W:\Projects\0000006002\BRFinal\EnglishCCSBridges.dgn 4455

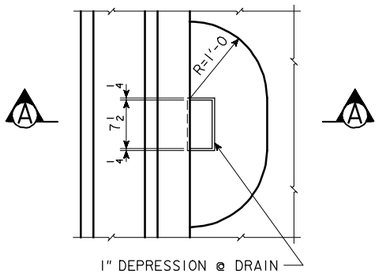

PART PLAN

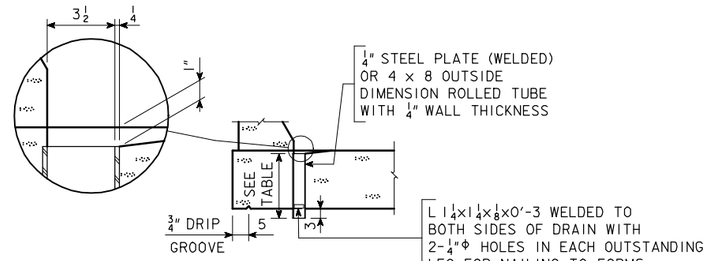

SECTION A-A

DRAIN DETAILS

NOTE: DRAINS ARE TO BE GALVANIZED. ?? DRAINS REQUIRED, SEE "SITUATION PLAN" FOR LOCATION. WEIGHT IS BASED ON WELDED PLATE. COST OF DRAINS TO BE INCLUDED IN PRICE BID FOR CONCRETE.

BRIDGE LENGTH	LENGTH OF DRAIN	WEIGHT LBS./DRAIN
70'-0	1'-4 1/2	27
80'-0	1'-5 1/4	28
90'-0	1'-6 1/4	30
100'-0	1'-7 1/2	32
110'-0	1'-8 1/2	33
120'-0	1'-10	36
130'-0	1'-11 1/4	38

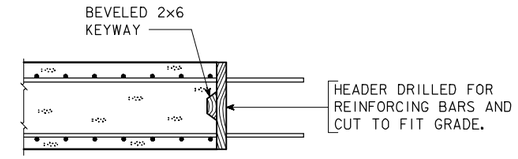

LONGITUDINAL CONSTR. JOINT

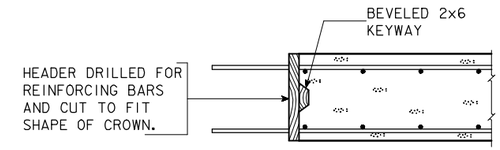

TRANSVERSE CONSTR. JOINT

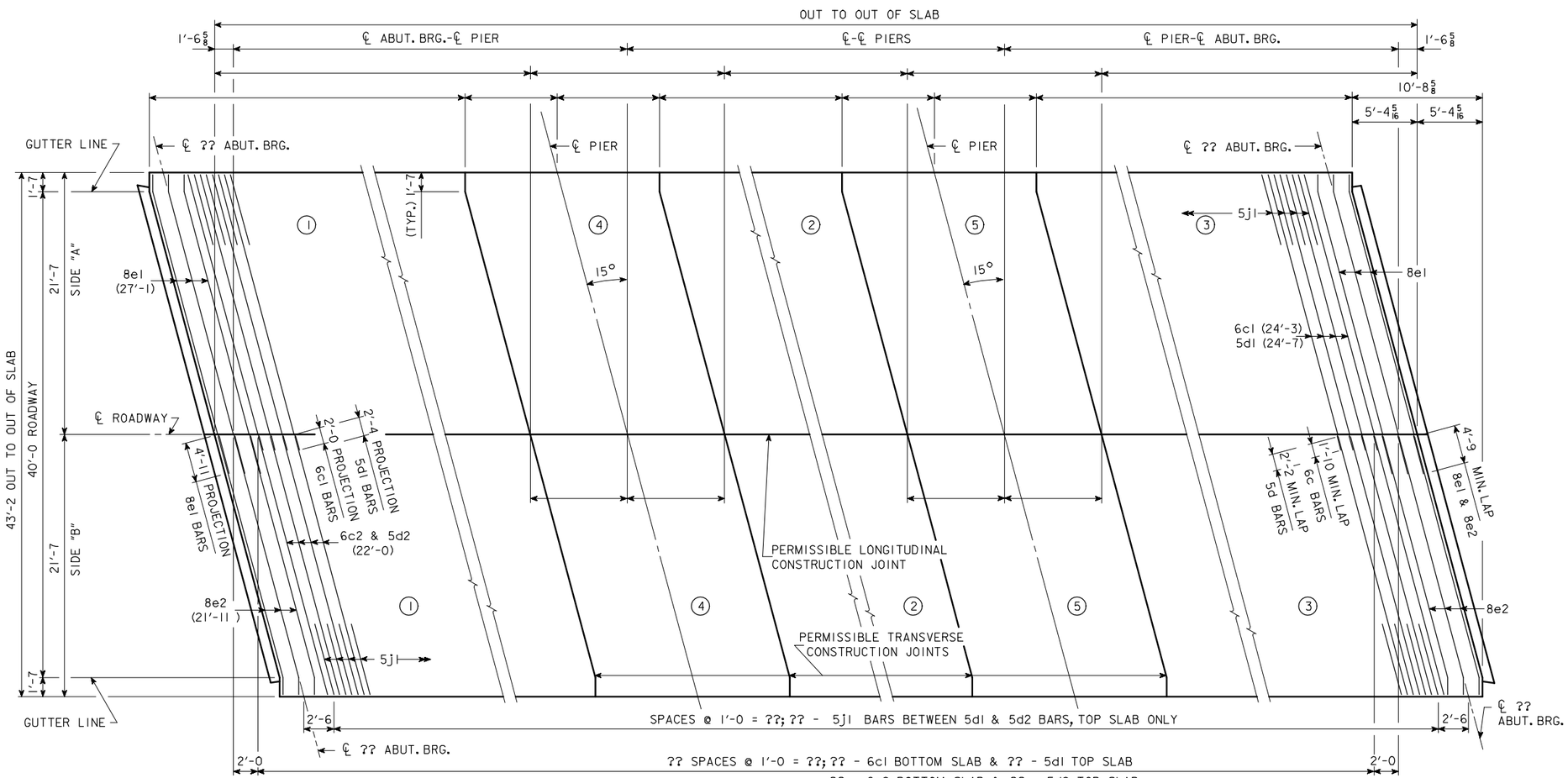

TRANSVERSE REINFORCING STEEL LAYOUT & CONCRETE PLACEMENT DIAGRAM

NOTE: ENCIRCLED NUMBERS DO NOT INDICATE SEQUENCE OF CONCRETE PLACEMENT. (SEE SUPERSTRUCTURE NOTES)

CONCRETE PLACEMENT QUANT.-SUPERSTR.

LOCATION	SIDE "A"	SIDE "B"	TOTAL
SLAB SECTION 1			
SLAB SECTION 2			
SLAB SECTION 3			
SLAB SECTION 4			
SLAB SECTION 5			
WINGS	4 AT 0.65 CU. YDS.		2.6
		TOTAL CU. YDS.	

IOWA DEPARTMENT OF TRANSPORTATION - HIGHWAY DIVISION
DESIGN SHEET NO. ____ OF ____ FILE NO. _____ DESIGN NO. _____

DESIGN TEAM	CONCRETE SLAB, PLACEMENT DIAGRAM - 40' ROADWAY - 15° SKEW R. A.	STANDARD SHEET 4456	COUNTY	PROJECT NUMBER	SHEET NUMBER

REVISED 07-05 - PAVING NOTCH EXTENDED TO INTERCEPT THE WINGS.
ENGLISHCCSBRIDGES.DGN 4456 - 08-12-88

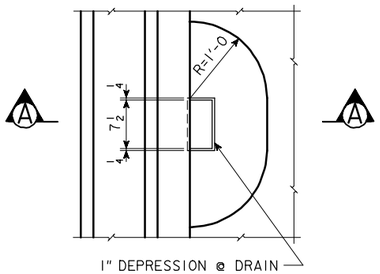

PART PLAN

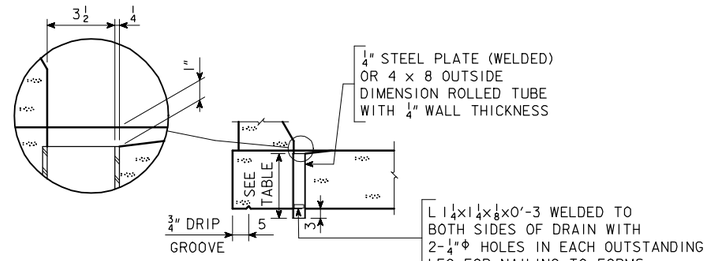

SECTION A-A

DRAIN DETAILS

NOTE: DRAINS ARE TO BE GALVANIZED. ?? DRAINS REQUIRED, SEE "SITUATION PLAN" FOR LOCATION. WEIGHT IS BASED ON WELDED PLATE. COST OF DRAINS TO BE INCLUDED IN PRICE BID FOR CONCRETE.

BRIDGE LENGTH	LENGTH OF DRAIN	WEIGHT LBS./DRAIN
70'-0	1'-4 1/2	27
80'-0	1'-5 1/4	28
90'-0	1'-6 1/4	30
100'-0	1'-7 1/2	32
110'-0	1'-8 1/2	33
120'-0	1'-10	36
130'-0	1'-11 1/4	38

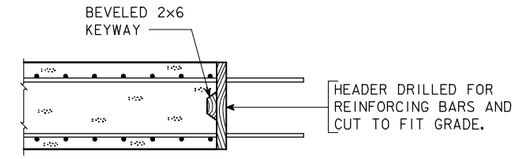

LONGITUDINAL CONSTR. JOINT

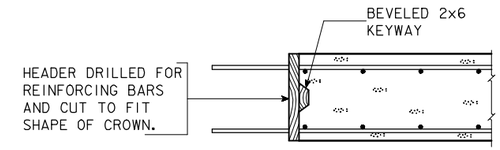

TRANSVERSE CONSTR. JOINT

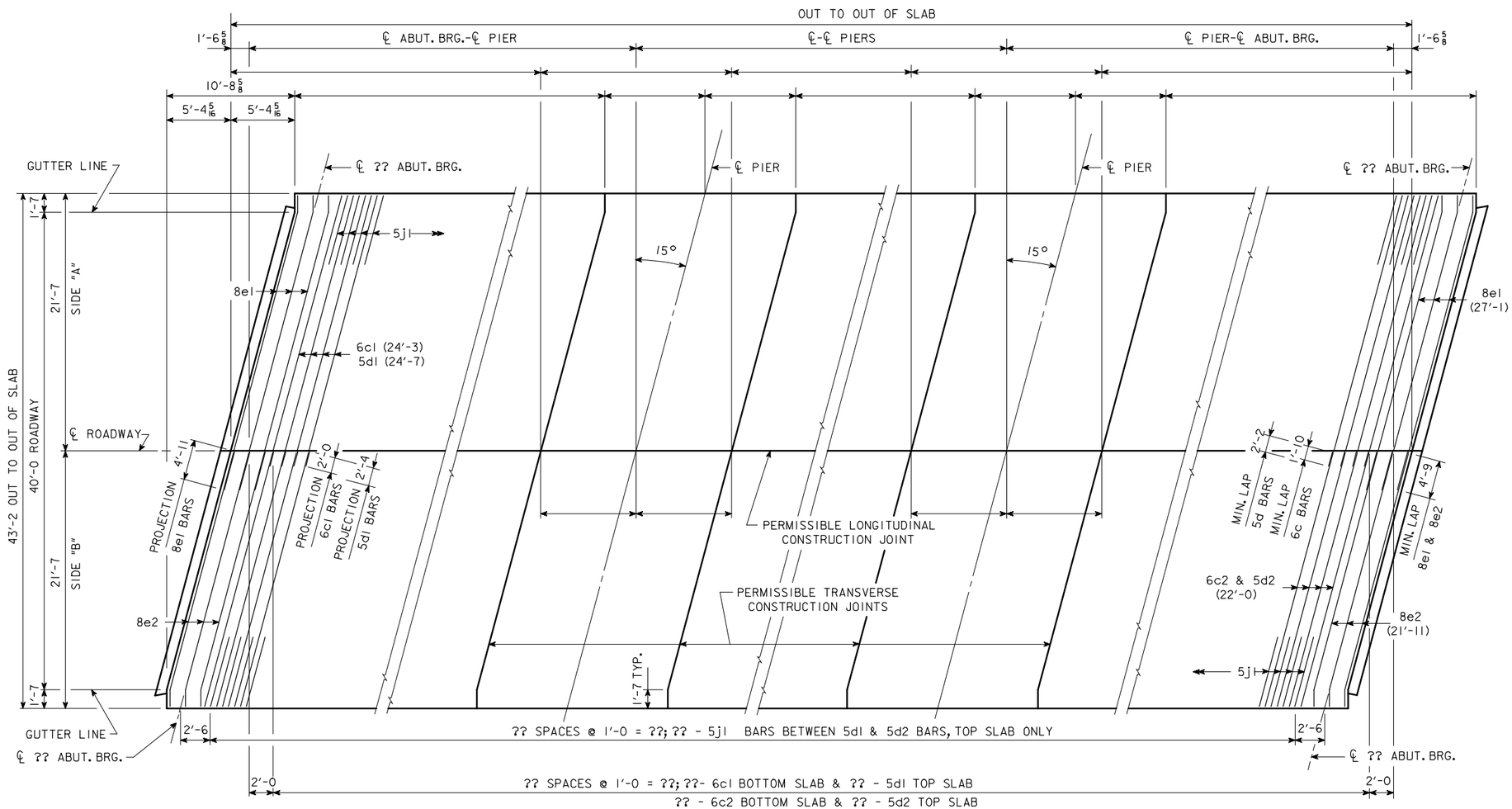

TRANSVERSE REINFORCING STEEL LAYOUT & CONCRETE PLACEMENT DIAGRAM

NOTE: ENCIRCLED NUMBERS DO NOT INDICATE SEQUENCE OF CONCRETE PLACEMENT. (SEE SUPERSTRUCTURE NOTES)

CONCRETE PLACEMENT QUANT.-SUPERSTR.

LOCATION	SIDE "A"	SIDE "B"	TOTAL
SLAB SECTION 1			
SLAB SECTION 2			
SLAB SECTION 3			
SLAB SECTION 4			
SLAB SECTION 5			
WINGS	4 AT 0.65 CU. YDS.		2.6
		TOTAL CU. YDS.	

IOWA DEPARTMENT OF TRANSPORTATION - HIGHWAY DIVISION
DESIGN SHEET NO. ____ OF ____ FILE NO. _____ DESIGN NO. _____

REVISED 07-05 - PAVING NOTCH EXTENDED TO INTERCEPT THE WINGS.
ENGLISHCCSBRIDGES.DGN 4457 - 08-12-88

DESIGN TEAM	CONCRETE SLAB, PLACEMENT DIAGRAM - 40' ROADWAY - 15° SKEW L. A.	STANDARD SHEET 4457	COUNTY	PROJECT NUMBER	SHEET NUMBER

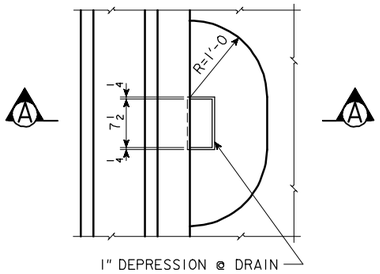

PART PLAN

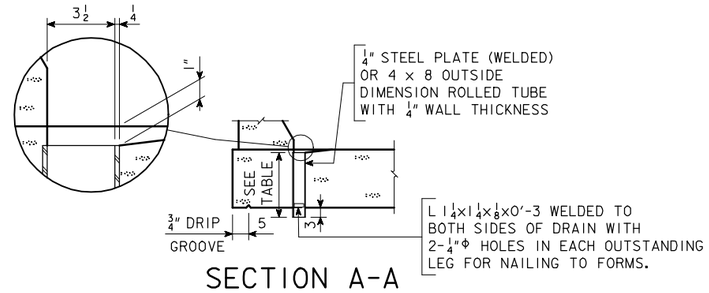

SECTION A-A

DRAIN DETAILS

NOTE: DRAINS ARE TO BE GALVANIZED. ?? DRAINS REQUIRED, SEE "SITUATION PLAN" FOR LOCATION. WEIGHT IS BASED ON WELDED PLATE. COST OF DRAINS TO BE INCLUDED IN PRICE BID FOR CONCRETE.

BRIDGE LENGTH	LENGTH OF DRAIN	WEIGHT LBS./DRAIN
70'-0	1'-4 1/2	27
80'-0	1'-5 1/4	28
90'-0	1'-6 1/4	30
100'-0	1'-7 1/2	32
110'-0	1'-8 1/2	33
120'-0	1'-10	36
130'-0	1'-11 1/4	38

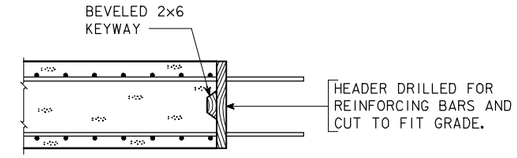

LONGITUDINAL CONSTR. JOINT

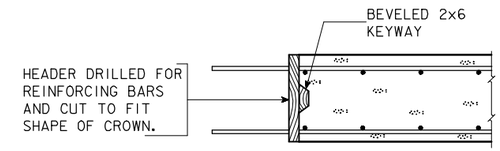

TRANSVERSE CONSTR. JOINT

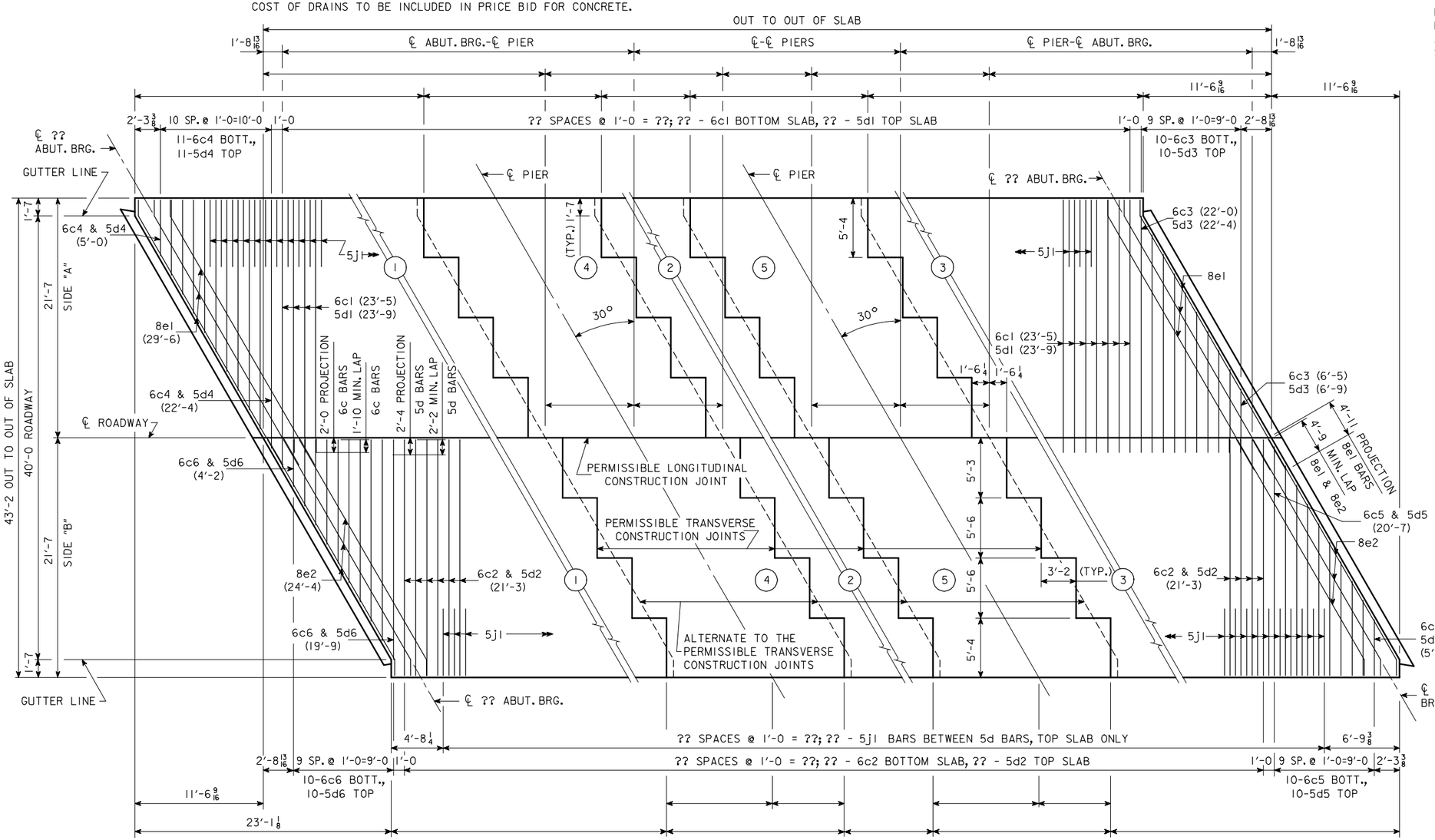

TRANSVERSE REINFORCING STEEL LAYOUT & CONCRETE PLACEMENT DIAGRAM

NOTE: ENCIRCLED NUMBERS DO NOT INDICATE SEQUENCE OF CONCRETE PLACEMENT. (SEE SUPERSTRUCTURE NOTES)

CONCRETE PLACEMENT QUANT.-SUPERSTR.

LOCATION	SIDE "A"	SIDE "B"	TOTAL
SLAB SECTION 1			
SLAB SECTION 2			
SLAB SECTION 3			
SLAB SECTION 4			
SLAB SECTION 5			
WINGS 4 AT 0.65 CU. YDS.			2.6
		TOTAL CU. YDS.	

IOWA DEPARTMENT OF TRANSPORTATION - HIGHWAY DIVISION

DESIGN SHEET NO. ____ OF ____ FILE NO. _____ DESIGN NO. _____

DESIGN TEAM	CONCRETE SLAB, PLACEMENT DIAGRAM - 40' ROADWAY - 30° SKEW R. A.	STANDARD SHEET 4458	COUNTY	PROJECT NUMBER	SHEET NUMBER

REVISED 07-05 - PAVING NOTCH EXTENDED TO INTERCEPT THE WINGS.
ENGLISHCCSBRIDGES.DGN 4458 - 08-12-88

09-FEB-2006 10:42 ajeffer W:\Projects\0000006002\BRFinal\EnglishCCSBridges.dgn 4458

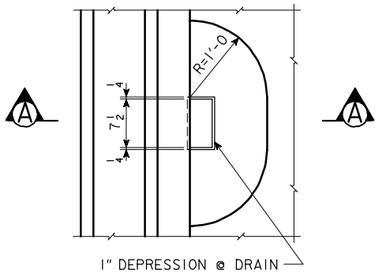

PART PLAN

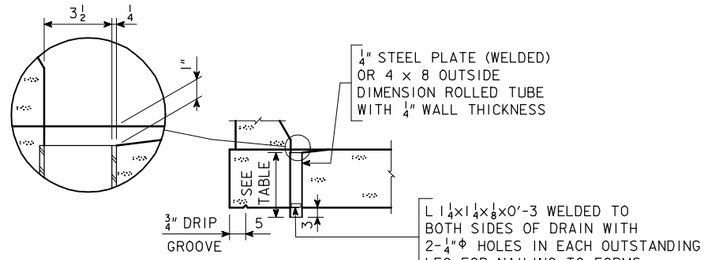

SECTION A-A

DRAIN DETAILS

NOTE: DRAINS ARE TO BE GALVANIZED. ?? DRAINS REQUIRED, SEE "SITUATION PLAN" FOR LOCATION. WEIGHT IS BASED ON WELDED PLATE. COST OF DRAINS TO BE INCLUDED IN PRICE BID FOR CONCRETE.

BRIDGE LENGTH	LENGTH OF DRAIN	WEIGHT LBS./DRAIN
70'-0	1'-4 1/2	27
80'-0	1'-5 1/4	28
90'-0	1'-6 1/4	30
100'-0	1'-7 1/2	32
110'-0	1'-8 1/2	33
120'-0	1'-10	36
130'-0	1'-11 1/4	38

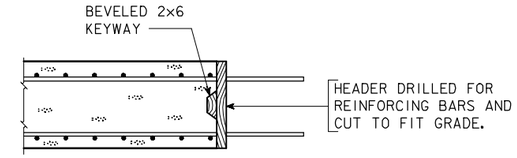

LONGITUDINAL CONSTR. JOINT

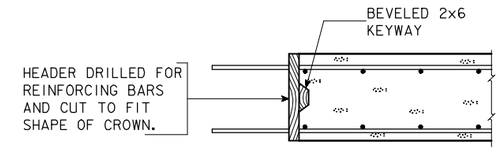

TRANSVERSE CONSTR. JOINT

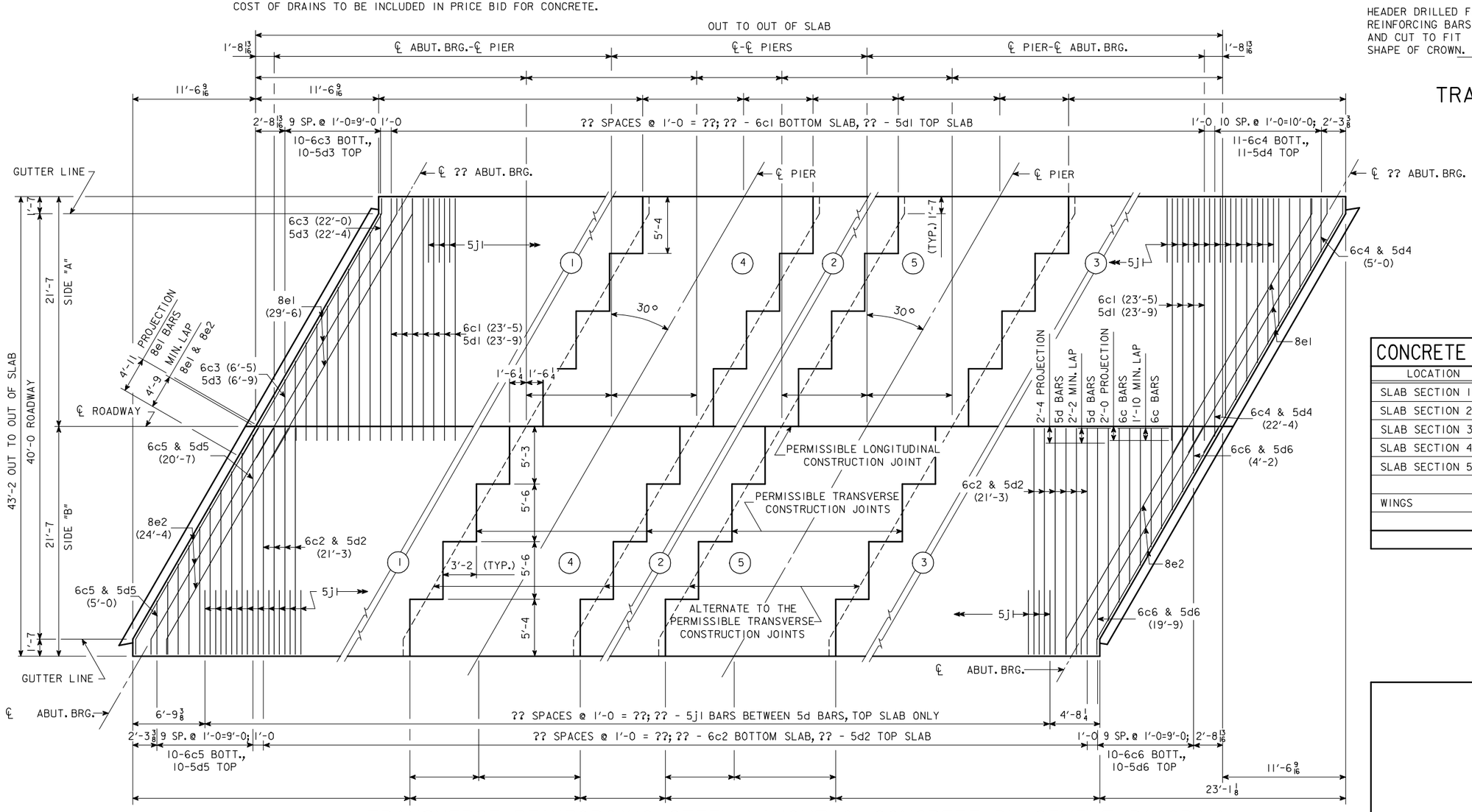

TRANSVERSE REINFORCING STEEL LAYOUT & CONCRETE PLACEMENT DIAGRAM

NOTE: ENCIRCLED NUMBERS DO NOT INDICATE SEQUENCE OF CONCRETE PLACEMENT. (SEE SUPERSTRUCTURE NOTES)

CONCRETE PLACEMENT QUANT.-SUPERSTR.

LOCATION	SIDE "A"	SIDE "B"	TOTAL
SLAB SECTION 1			
SLAB SECTION 2			
SLAB SECTION 3			
SLAB SECTION 4			
SLAB SECTION 5			
WINGS 4 AT 0.65 CU. YDS.			2.6
TOTAL CU. YDS.			

IOWA DEPARTMENT OF TRANSPORTATION - HIGHWAY DIVISION

DESIGN SHEET NO. ____ OF ____ FILE NO. _____ DESIGN NO. _____

REVISED 07-05 - PAVING NOTCH EXTENDED TO INTERCEPT THE WINGS.
ENGLISHCCSBRIDGES.DGN 4459 - 08-12-88

DESIGN TEAM	CONCRETE SLAB, PLACEMENT DIAGRAM - 40' ROADWAY - 30° SKEW L. A.	STANDARD SHEET 4459	COUNTY	PROJECT NUMBER	SHEET NUMBER

09-FEB-2006 10:42 ajeffer W:\Projects\0000006002\BRFinal\EnglishCCSBridges.dgn 4459