TABLE OF CONTENTS ~ FALSEWORK DESIGN

Note that section 11.2 is based primarily on AASHTO's *Guide Design Specifications for Bridge Temporary Works, First Edition with 2008 Interim Revisions* [AASHTO-Temp] and allowable stress design (ASD).

11 Falsework design
- 11.1 General
- 11.2 Falsework and forms
  - 11.2.1 General
    - 11.2.1.1 Policy Overview
    - 11.2.1.2 Design information
    - 11.2.1.3 Definitions
    - 11.2.1.4 Abbreviations and notation
    - 11.2.1.5 References
  - 11.2.2 Load application
  - 11.2.3 Service load groups
  - 11.2.4 Analysis and design
    - 11.2.4.1 Analysis
    - 11.2.4.2 Allowable stresses
      - 11.2.4.2.1 Plywood sheathing
      - 11.2.4.2.2 Board sheathing
      - 11.2.4.2.3 Dimension lumber and timber
      - 11.2.4.2.4 Steel
      - 11.2.4.2.5 Piles
      - 11.2.4.2.6 Soils
    - 11.2.4.3 Section properties
    - 11.2.4.4 Design
  - 11.2.5 Detailing
  - 11.2.6 Plan review
    - 11.2.6.1 Plan checklist
    - 11.2.6.2 Design review checklist
    - 11.2.6.3 Reviewed copy distribution

11 Falsework design

11.1 General

Reserved

11.2 Falsework and forms

11.2.1 General

This series of articles replaces all previous Office of Bridges and Structures documents related to falsework, including those titled *Criteria for Falsework Check.* The approach adopted here is new to the office, to use the AASHTO *Guide Design Specification for Bridge Temporary Works* as the primary reference, with additional information from publications of the American Forest & Paper Association (AF&PA), APA – The Engineered Wood Association (APA), and American Concrete Institute (ACI) [BDM 11.2.1.5].

The designer should review the appropriate Bridge Design Manual section for the bridge type for which the falsework will be designed, as the section may indirectly affect falsework and forms. The following are the articles for the typical bridge types: continuous concrete slab (CCS) [BDM 5.6.2], pretensioned prestressed concrete beam (PPCB) [BDM 5.4.1], and continuous welded plate girder (CWPG) [BDM 5.5.2]. For CCS bridges the contractor is required to submit falsework plans for review [IDOT SS 2403.03,

L, 7, a], but for the other two types, as well as for rolled steel beam bridges (RSB), falsework plans need not be submitted for review unless specifically required by the contract documents.

11.2.1.1 Policy Overview

Terminology within the construction industry regarding the molding and temporary support of concrete structures during cast-in-place construction is not universal. In the building industry and in American Concrete Institute (ACI) publications "formwork" generally is used to describe the entire mold and temporary support construction.

However, at the Iowa DOT the term "formwork" has a more limited meaning. The word "form" or "formwork" is taken to mean the mold and immediate bracing of the mold, and "falsework" is taken to mean the temporary support structure for the mold. AASHTO's *Guide Design Specification for Bridge Temporary Works* makes the same distinction, and there are separate sections within the guide for falsework and formwork [AASHTO-Temp 2 and 3, respectively]. This series of articles will follow the Iowa DOT and AASHTO "form", "formwork", and "falsework" terminology.

The typical bridge types designed by the office, continuous concrete slab (CCS), pretensioned prestressed concrete beam (PPCB), continuous welded plate girder (CWPG), and rolled steel beam (RSB) usually make use of cast-in-place concrete construction and therefore will require falsework for support of forms. The design of falsework is entirely the responsibility of the contractor, and current Iowa DOT Standard Specifications require that a Professional Engineer licensed in the State of Iowa perform the design [IDOT SS 2403.03, L, 1, a].

The present Iowa DOT Standard Specifications also require the contractor to submit for review the falsework and centering plans for concrete slab and cast-in-place concrete girder bridges [IDOT SS 2403.03, L, 7, a]. Both of the bridge types mentioned in the specifications require extensive falsework supported on temporary foundations. Because the office generally no longer designs cast-in-place concrete girder bridges, typically only falsework plans for CCS bridges are reviewed by the office.

The designer and reviewer should recognize that less precision is required for formwork and falsework computations than for bridge design. Acceptable basic simplifications and beam formulas for typical span conditions are given in ACI's *Formwork for Concrete* [BDM 11.2.1.5]. Often it will be sufficient to consider only the worst-case scenario.

In the design of falsework the contractor may propose used or locally available structural materials not permissible for permanent structures. The structural implications are especially important for lumber and timber. The designer and reviewer should recognize that allowable stresses for a given grade of lumber or timber vary widely for different species and, because of grading rules, cut-to-length timber beams and stringers do not have the same grading as the original members. Therefore, typical design values, such as those given in the Iowa DOT Standard Specifications [IDOT SS 2403.03, L, 5, c], may be too generous for lumber and timber of some grades, species, or condition. The designer or reviewer will need to obtain as much information as possible about the material to be used so that the falsework is both safe and economical. AASHTO's *Guide Design Specification for Bridge Temporary Works* provides for several levels of allowable stresses depending on how much is known about the lumber and timber proposed by the contractor.

Falsework can be very unstable and subject to collapse if not adequately braced. In general, falsework must be braced in three planes--horizontal and two perpendicular vertical planes--as well as be braced for overall torsion. Usually nailed-in-place plywood form sheathing is sufficient to provide the horizontal bracing, but bracing for the vertical planes must be added to the structure. In any case the designer and reviewer need to ensure that sufficient bracing is shown on the plans so that the falsework will not fail during placing of concrete. Because failures can be of a progressive type, there should be no locally unbraced parts of the falsework construction that could set off a chain reaction collapse.

Water used for curing also is an important consideration. Temporary foundations such as mudsills may

need protection to avoid softening or wash-out of the supporting soil.

11.2.1.2 Design information

For falsework design the bridge project plans are the source for the configuration, dimensions, and elevations of the bridge to be constructed. For concrete slab bridges falsework may rely on temporary foundations for support, and thus the soils information provided on the project plans also is important to the falsework designer.

For falsework review the falsework plans and computations submitted with the plans are the primary sources of information, but the reviewer also should refer to the bridge project plans as needed to ensure that the falsework will provide the correct configuration and dimensions of the bridge.

11.2.1.3 Definitions

Blue Book is the Iowa DOT publication: *Foundation Soils Information Chart, Pile Foundation*. If the publication no longer is available from the Soils Design Section, see the work-around in the commentary [BDM C11.2.4.2.5].

Centering is specialized temporary support that is lowered or removed as a unit to avoid introducing injurious stresses in any part of the structure.

Falsework is the temporary construction used to support the permanent structure until it becomes self-supporting [AASHTO-Temp 1.3]. Structural supports on the soffit of a bridge deck and slab overhangs are considered falsework [AASHTO-Temp 3.1.3].

Form is the mold used to retain the fluid or plastic concrete in its designated shape until it hardens. In office practice, form is part of the formwork as defined below.

Formwork is the temporary structure or mold used to retain the fluid or plastic concrete in its designated shape until it hardens [AASHTO-Temp 1.3]. Formwork includes vertical side forms, wall forms, and column forms and their associated studs, walers, etc. [AASHTO-Temp 3.1.3].

Walers or wales, are horizontal cross members used as support for the studs in vertical formwork. AASHTO favors the term "waler", and ACI favors the term "wale".

11.2.1.4 Abbreviations and notation

ACI, American Concrete Institute
AF&PA, American Forest and Paper Association, which is the successor to the National Forest Products Association (NFPA)
AISC, American Institute of Steel Construction, Inc.
APA, APA - The Engineered Wood Association, the successor to the American Plywood Association, which was the successor to the Douglas Fir Plywood Association (DFPA)
ASD, allowable stress design, terminology used in NDS [BDM 11.2.1.5] and by ACI, same as WSD
AWC, American Wood Council, the wood products division of AF&PA
ASCE, American Society of Civil Engineers
CCS, continuous concrete slab
C_s, concrete setting factor included in APA's *Concrete Forming, Form No. V345U*
CWPG, continuous welded plate girder
LDF, load duration factor, also designated C_D in the NDS
NDS, AF&PA's *National Design Specification for Wood Construction* [BDM 11.2.1.5]
NFPA, National Forest Products Association, superseded by American Forest and Paper Association (AF&PA)
PPCB, pretensioned prestressed concrete beam
RCE, Resident Construction Engineer

RSB, rolled steel beam
WEAP, wave equation analysis of pile driving
WSD, working stress design, terminology used by AASHTO and ACI, same as ASD
WUF, wet use factor, also designated C_M in the NDS

11.2.1.5 References

American Association of State Highway and Transportation Officials (AASHTO). *Guide Design Specification for Bridge Temporary Works with 2008 Interim Revisions.* Washington: AASHTO, 1995 and 2008. Note that this guide is based on the Seventh Edition of *Formwork for Concrete* and the 2005 Edition of *National Design Specification for Wood Construction, Commentary, Supplement, and Examples.*

American Concrete Institute (ACI). *Formwork for Concrete, SP-4, Seventh Edition.* Farmington Hills: ACI, 2005. Note that this guide is based on the 2005 Edition of *National Design Specification for Wood Construction* and *Supplement.*

American Forest and Paper Association (AF&PA). *National Design Specification for Wood Construction, Commentary, Supplement, and Examples, 2005 Editions.* Washington: AF&PA, 2005. Note that the National Forest Products Association published editions of the NDS prior to 1993.

American Society of Civil Engineers (ASCE). *Minimum Design Loads for Buildings and Other Structures, ASCE 7-98.* Reston, ASCE, 2000. Note that this publication is the successor to ANSI A58.1.

APA - The Engineered Wood Association. *Concrete Forming, Form No. V345U.* Tacoma: APA - The Engineered Wood Association, 2003. Note that the American Plywood Association published prior editions. (Available on the Internet at: http://www.apawood.org)

APA - The Engineered Wood Association. *Panel Design Specification, Form No. D510C.* Tacoma: APA - The Engineered Wood Association, 2008. Note that prior editions were titled *Plywood Design Specification*. (Available on the Internet at: http://www.apawood.org)

Brockenbrough, R.L. *AISC Rehabilitation and Retrofit Guide, Steel Design Guide Series 15.* Chicago: American Institute of Steel Construction (AISC), 2002. Note that this guide replaces *Iron and Steel Beams: 1873-1952,* which was published by AISC in 1953.

Dirks, Kermit and Patrick Kam. *Foundation Soils Information Chart, Pile Foundation.* Ames: Iowa Department of Transportation, Office of Road Design, January 1989/September 1994. (This publication commonly is called the “Blue Book”. Contact the Soils Design Section of the Office of Design for a copy. If the publication no longer is available, see the work-around for allowable stress design in the commentary [BDM C11.2.4.2.5].)

Office of Construction. *Construction Manual.* Ames: Office of Construction, Iowa Department of Transportation, 2001. Available on the Internet at:
http://www.iowadot.gov/erl/current/CM/Navigation/nav.htm

Sunday, Wayne and Kyle Frame. *New Bridge Construction Handbook.* Ames: Office of Construction, Iowa Department of Transportation, 2000. Available on the Internet at:
http://www.iowadot.gov/construction/structures/bridge_construction_handbook.pdf

11.2.2 Load application

Iowa DOT Standard Specifications require that the formwork and falsework designer apply the following loads [IDOT SS 2403.03, L, 4].

- Vertical load of concrete with a density of 150 pounds per cubic foot (2400 kg/m^3).
- Horizontal load of fresh concrete as a liquid with a density of 150 pounds per cubic foot (2400 kg/m^3) for the depth of plastic concrete, except when lesser pressures are permitted by the

AASHTO Guide Design Specifications for Bridge Temporary Works [AASHTO-Temp 3.2.2 and C2.2.2].

- Vertical dead load of forms and falsework.
- Vertical dead load of rail and walkway applied at edge of deck form equal to 75 pounds per linear foot (1.1 kN/m).
- Construction live load equal to 50 pounds per square foot (2.4 kPa) of horizontal projection.
- Live load equal to 6 kips (26.690 kN) of finishing machine located along the edge of the deck form to maximize the design condition.
- Wind load equal to 50 pounds per square foot (2.4 kPa) for elevations to 30 feet (10 m) above ground, increased for elevations above 30 feet (10 m).
- Other applicable loads such as horizontal due to equipment or construction sequence, additional live, impact, stream flow, and snow loads specified in the AASHTO guide [AASHTO-Temp 2.2.1, 2.2.3.2, 2.2.5.2, 2.2.5.3].

Loads for formwork are the weight of the forms; weight of concrete, including rate of pour; and construction live load. The loads for falsework are more extensive, including the edge of deck load and finishing machine load as given for bridge deck falsework for PPCB and CWPG bridges [BDM 5.4.1.2.5 and 5.5.2.2.6]. Falsework wind load is larger than required by the AASHTO guide but is the same as the construction wind load for PPCB and CWPG bridges.

11.2.3 Service load groups

In general falsework and formwork should be designed for the applicable loads in the four load combinations given in the *AASHTO Guide Design Specifications for Bridge Temporary Works* [AASHTO-Temp Table 2.3]. However, because falsework and formwork materials are treated differently under allowable stress design the designer will need to be careful when identifying critical load combinations. For steel and concrete the percentages of allowable stress in the AASHTO guide [AASHTO-Temp Table 2.3] are appropriate, but those percentages shall not be used with plywood, lumber, or timber. For plywood, lumber, or timber the load duration factor substitutes for the percentage of allowable stress and, because the load duration factors vary with type of load, it will be necessary to find the critical load combination within each applicable load group.

Allowable stresses for wood structural materials are adjusted for load duration, wet use, and other factors not given in the AASHTO table [AASHTO-Temp Table 2.3], but are adjusted as indicated in Table 11.2.3. In addition to the table notes there is discussion of the factors in the commentary for this article [BDM C11.2.3].

Table 11.2.3. Selected adjustment factors for allowable stresses for wood falsework and formwork materials

Structural component	Load combination	Load duration factor (4), (5)	Wet use factor (3), (4)
Plywood forms	Dead + live (but not wind or impact)	--- (1), (2)	---
Lumber and timber formwork and falsework	Dead + live with or withouthorizontal (but not wind or impact)	1.25 (2)	No
	Combinations with wind (but not impact)	1.60	No
	Combinations with impact	2.00	No

Table notes:

(1) In the past the load duration factor for plywood has been combined with an experience factor of 1.30. The current APA *Concrete Forming* publication combines the two factors into a concrete setting factor (C_s) of 1.625, which is included in the APA publication's tables.

(2) The 1.25 load duration factor assumes a 7-day load, which is appropriate for most

falsework and formwork projects unless load is maintained for an extended period, in which case the load duration factor will be less. In cases (unusual for bridge construction) where formwork is reused many times ACI's *Formwork for Concrete* recommends a more conservative load duration factor of 1.00.

(3) Typically plywood forms are considered a wet use condition and the wet use factor is included in form tables such as those in the APA *Concrete Forming* publication, but lumber and timber are considered a dry use condition because the lumber or timber members do not contact concrete. In unusual cases where lumber is used as a form or where formwork and falsework will be exposed to curing water or water from other sources the designer should apply the wet use factor.

(4) Although these two factors are the typical factors significant for ordinary formwork and falsework design, the designer should review other factors in the *National Design Specification for Wood Construction* to ensure that all appropriate factors are applied to allowable stresses.

(5) The load duration factor does not apply to compression perpendicular to the grain or to modulus of elasticity.

11.2.4 Analysis and design

During analysis and design of falsework and formwork the designer should consider its temporary nature during construction of a cast-in-place concrete bridge. Because of its temporary nature, computations do not need to be as precise or complex as those for a permanent structure.

For safe and economical falsework the designer needs to consider several issues that often are not important in bridge design. Because falsework materials may be salvaged or of unknown quality there is need for some conservatism in design values. Deflection and settlement are important because they will result in permanent shape defects in the completed bridge. Many of the components of falsework are continuous over several supports and thus are sensitive to uplift when one span is loaded during placement of concrete. The compression edges of joists, stringers, and caps are not continuously braced and often require additional bracing. Unbalanced loads on hangers can cause torsion in supporting members. Inadequate bracing of support bents can lead to overall collapse of the falsework.

11.2.4.1 Analysis

The office prefers that typical falsework and formwork structures be analyzed under the basic simplifications stated in ACI's *Formwork for Concrete.* The designer also is encouraged to use the ACI beam formulas, unless conditions within the falsework or formwork are significantly different from the formula assumptions.

For most falsework conditions, sheathing and joists should be considered continuous over three spans. If the stringer spacing is greater than 5 feet (1.520 m), however, joists should be designed on the basis of the number of spans possible for a joist no longer than 16 feet (4.880 m).

11.2.4.2 Allowable stresses

The falsework designer should recognize the need to specify materials on the plans with as much precision as is reasonable. If the materials cannot be defined accurately their allowable stresses need to be downrated for safety. The AASHTO guide provides several appropriate levels of allowable stresses for steel, lumber, and timber materials depending on how well they can be identified [AASHTO-Temp 2.1].

11.2.4.2.1 Plywood sheathing

The Iowa DOT specifications permit a variety of form surface materials [IDOT SS 2403.03, B, 5, c] but, due to cost and construction factors, contractors usually select plywood for cast-in-place concrete bridge construction. Within the many types of exterior plywood that are suitable for forms, contractors almost always select a product specifically manufactured for concrete forming because of the superior performance under multiple uses and the mill edge sealing and form release treatment.

Of the available plywood form products, the standard products are those trademarked by APA - The Engineered Wood Association. The trademarked product "Plyform" has three grades: Class I, Class II, and Structural I. Although the weakest grade, Class II, may have limited availability, it has been submitted for review on some Iowa falsework projects. Considering the variety of plywood products that may be available, including those not trademarked by APA, the designer should consult with the contractor and not simply assume a grade.

The preferred office policy is for the designer to specify the plywood form product, and properties if the product is not standard. Although the Iowa DOT specifications permit the reviewer to assume “Plyform, Class I” [DOT SS 2403.03, L, 5, c], the reviewer should recognize that assumption may be unconservative if the plywood is not specified.

Although plywood may be designed on the basis of allowable stress computations for bending, shear, and deflection, the office prefers that the designer use tables in ACI's *Formwork for Concrete, SP-4, Seventh Edition* for plywood sheathing equivalent to Plyform Class I or better. The tables that meet Iowa DOT specifications are based on 7-day duration of load, wet use, an experience factor of 1.30, and three or more spans. The specific allowable values on which the tables are based are the following.

- F_b' = 1930 psi (13.31 MPa)
- Rolling shear = 72 psi (0.496 MPa)
- E'= 1,500,000 psi (10,340 MPa)

If the direction of face grain is not specified on the plans, the designer shall consider the span to be the worse of the two conditions, face grain perpendicular to span.

In cases where the plywood sheathing is of lesser quality than Plyform Class I the designer shall perform the bending, shear, and deflection computations necessary to demonstrate that the plywood sheathing is adequate for the support spacing.

The Iowa DOT specifications require a deflection limit of 1/360 of the span [IDOT SS 2403.03, L, 6, b].

11.2.4.2.2 Board sheathing

In the past before plywood was readily available, concrete forms were sheathed with nominal 1-inch (25 mm) thick boards. Because the Iowa DOT specifications now require that board forms for exposed surfaces be lined with sheet material [IDOT SS 2403.03, B, 5, c] and because placing boards requires more labor than placing plywood, contractors do not use board sheathing for large areas. However, contractors may use boards for small areas that typically do not require structural design.

In an unusual case when board sheathing is to be used structurally there are two concerns for the designer. First, board lumber is not stress graded, and there are no published design values. Second, boards placed perpendicular to joists do not have the horizontal rigidity and overall bracing value of sheet materials such as plywood.

In any case where board lumber is to be used structurally in falsework, the designer shall investigate the actual lumber to be used and assign allowable stresses based on species, grade, defects, load duration, and wet use. The species, grade, and adjusted design values shall be indicated on the falsework plans.

11.2.4.2.3 Dimension lumber and timber

The wood industry classifies sawn lumber nominally 2 to 4 inches (50 to 100 mm) thick as dimension lumber and sawn lumber nominally 5 inches (125 mm) and thicker as timber. Within the dimension lumber size category there presently are three grading systems for species except southern pine and a separate system for southern pine. Within the timber size category there are two grading systems. In addition to the multiple size and grading classifications there are species groups and design value adjustment factors. It is very difficult to determine appropriate allowable stresses for dimension lumber and timber when the materials are not grade-stamped or when the stamps no longer are legible.

For typical lumber and timber in good condition the Iowa DOT Standard Specifications permit the designer and reviewer to use the design values in Table 11.2.4.2.3-1 [IDOT SS 2403.03, L, 5, c, 3) and 4)]. The designer may use larger design values from AASHTO's *Guide Design Specification for Bridge Temporary Works* or the *National Design Specification for Wood Construction Supplement* for lumber or timber fully identified on plans with size or use category, species group, and minimum grade.

Table 11.2.4.2.3-1. Design values for lumber and timber in good condition

Stress	**Design value for lumber nominally 2 to 4 inches thick, psi (MPa) (1) (3)**	**Design value for timber nominally 5 inches or more thick, psi (MPa) (2) (3)**
Bending, F_b	875 (6.03)	850 (5.86)
Tension, F_t	450 (3.10)	450 (3.10)
Shear, F_v	135 (0.93)	125 (0.86)
Compression perpendicular to grain, $F_{c\perp}$	425 (2.93)	425 (2.93)
Compression parallel with grain, F_c	1150 (7.93)	625 (4.31)
Modulus of Elasticity, E	1,400,000 (9,650)	1,300,000 (8,960)

Table notes:

(1) These design values were selected as the lowest for new, No. 2 lumber of douglas fir-larch, southern pine, or spruce-pine-fir. They are to be modified by the load duration factor and other applicable factors [BDM 11.2.3].

(2) These design values were selected as the lowest for new, No. 1 timber of douglas fir-larch, southern pine, or spruce-pine-fir. They are to be modified by the load duration factor and other applicable factors [BDM 11.2.3].

(3) These design values also are given in the Standard Specifications [IDOT SS 2403.03, L, 5, c].

For used lumber (and timber) the AASHTO guide provides four levels of allowable stress [AASHTO-Temp 2.1.3.3] as interpreted and summarized in Table 11.2.4.2.3-2.

Table 11.2.4.2.3-2. Allowable stresses for used lumber and timber

Condition	**Species**	**Grade**	**Maximum adjusted allowable stress**
Good	Known	Known	New lumber of known species and grade with all appropriate stress-adjustment factors (See NDS and Supplement.)
Good	Known	Unknown	New lumber of known species and No. 1 grade with all appropriate adjustment factors (See NDS and Supplement.)
Low quality or abused	Known	Known or unknown	Known species and values in AASHTO guide Appendix A without increase for load duration or other stress-adjustment factors (1)
Good, low quality, or abused	Unknown	Unknown	Mixed maple species and values in AASHTO guide Appendix A without increase for load duration or other stress-adjustment factors

Table note:

(1) The species listed in Appendix A do not include spruce-pine-fir, a common Canadian species group sold in the U.S. For low quality or abused spruce-pine-fir the designer shall assume mixed maple.

The repetitive member factor in the *National Design Specification for Wood Construction,* which permits an increase in allowable bending stress for joists and studs, shall be used only for rigidly constructed prefabricated form panels.

The Iowa DOT specifications require that deflection of joists be limited to 1/360 of the span [IDOT SS 2403.03, L, 6, b], and the office prefers that the same limit be applied for lumber or timber stringers.

11.2.4.2.4Steel

The minimum yield stress for steel shapes and plate has remained relatively constant during recent years and thus the material properties for salvaged steel can be assumed with a reasonable degree of certainty. The designer may determine allowable stresses for both new and salvaged steel based on the Iowa DOT Standard Specifications, 36,000 psi (248 MPa) yield and 22,000 psi (151 MPa) maximum working stress, [IDOT SS 2403.03, L, 5, c, 1)] or based on information in the AASHTO guide [AASHTO-Temp 2.1.2] if the contractor certifies a higher grade of steel.

The designer should note that the allowable stress for steel stringers often will be limited by the allowable stress for an unsupported compression flange.

Although the structural properties of steel are relatively certain, weldability is less certain, especially with older steels. The designer should not depend on welds for primary connections for older steel plate and shapes, unless the weldability has been proven.

Although the Iowa DOT specifications do not set a limit for deflection of steel stringers, the office prefers a limit of 1/360 of the span length.

11.2.4.2.5Piles

The Iowa DOT specifications do not require that falsework piles meet specifications for permanent piles but do require that pile bearing be determined as for permanent piles [IDOT SS 2403.03, L, 3, b and 2501.03] and that the bearing values be at least equal to the applied loads. Although the specifications have no restrictions on pile type, most contractors select timber piles for economy. Timber piles for falsework need not be treated.

Pile lengths may be estimated for friction bearing and end bearing as for permanent piles, using the Soil Design Section's *Foundation Soils Information Chart, Pile Foundation* (Blue Book). If the Blue Book is not available, see the work-around and examples in the commentary for this article [BDM C11.2.4.2.5] because the present design for permanent piles in the BDM is based on LRFD. Maximum allowable bearing value for timber piles should be limited to 20 tons (178 kN).

Sway bracing may be omitted for pile bents 10 feet (3 m) or less in height [IDOT SS 2403.03, L, 3, c], but the designer will need to check lateral stability and show on the plans the minimum pile embedment required for lateral stability.

11.2.4.2.6Soils

Allowable bearing on coarse sand, gravel, very firm clay, and other similar confined soils may be taken as 1500 psf (72 kPa) unless otherwise recommended by a Professional Engineer licensed in the State of Iowa [IDOT SS 2403.03, L, 5, c, 5)]. Allowable bearing on compacted berms may be taken as 2000 psf (96 kPa). When using mudsills supported on soils, however, the designer shall ensure that the soils are adequate to support the applied load and that the soils will not be subject to washout during anticipated weather and curing conditions.

Additional information for presumptive bearing on soil and rock and for foundations is given in the AASHTO guide [AASHTO-Temp 2.4].

11.2.4.3 Section properties

In general the designer should use published properties for falsework and formwork materials rather than computed properties. For used materials, however, the designer shall account for any critical loss of section when determining section properties.

The designer should be especially careful in determining the section properties for wood products. The properties are not always as expected, as should be evident from the following examples.

- Plywood section properties are dependent on the plies in the direction of stress rather than the full cross section.
- For the same nominal dimension, finished sizes of timber in most cases are different from finished sizes of lumber.

Contractors often use a mix of new and salvaged steel shapes for stringers, caps, walers, and accessories. Unless the proposed shapes are likely to be relatively new, as is the case for HP shapes, the designer should consult a reference that lists properties of shapes produced in the past. *AISC Rehabilitation and Retrofit Guide, Steel Design Guide Series 15* [BDM 11.2.1.5] is a reference that is currently available and which replaces *Iron and Steel Beams: 1873-1952.* The designer should take a conservative approach and use the minimum properties for the shape depth.

11.2.4.4 Design

For most projects the plans should include a deflection diagram. However, if deflections do not exceed 1/8 inch (3 mm), a deflection diagram is not required because crushing and take-up will amount to as much as the deflection.

The detailing article requires a bridging system for stringers at supports [BDM 11.2.5], and that system will provide support of the compression flange at the supports. If additional support for the compression flanges of stringers is needed the designer shall provide additional bridging systems between supports.

Timber piles that extend above ground more than 20 feet (6.100 m) should be designed as columns with the applied forces and moments.

11.2.5 Detailing

If the designer has assumed that plywood is placed with face grain parallel with the span, the direction of the face grain shall be shown on the falsework plans.

Falsework with joists 2 x 8 or larger shall have bridging over each stringer at each permanent pier and abutment, as shown in Figure 11.2.5-1. Bridging is not required when the joists are smaller than 2 x 8.

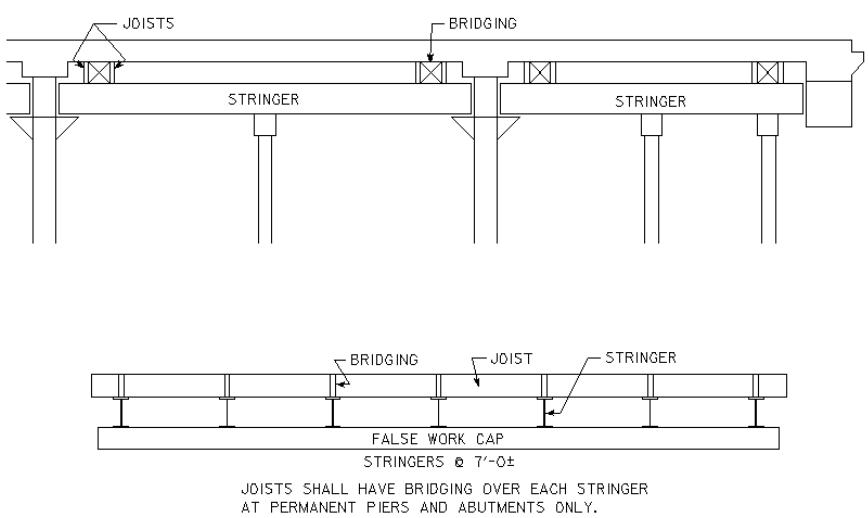

Figure 11.2.5-1. Falsework bridging

For stringers a positive bridging system shall be provided at each support.

Continuous joist and stringer spans shall be secured against uplift.

Caps shall be doweled, drift pinned, or lagged to piles. Timber cap requirements are given in the Iowa DOT specifications [IDOT SS 2409.03, H].

Pile bracing shall be bolted and spiked at ends and at intersections [IDOT SS 2409.03, I].

Concrete mudsills for support of falsework may be attached to integral abutments. For bridges 150 feet (45.720 m) or less in length, mudsills may be used with no width or depth restriction. For bridges over 150 feet (45.720 m) in length, mudsills attached to integral abutments may be used with the following two restrictions.

- The total width of all mudsills shall not exceed 50% of the out-to-out integral abutment width.
- The depth of mudsill shall not exceed 18 inches (460 mm) as shown in Figure 11.2.5-2.

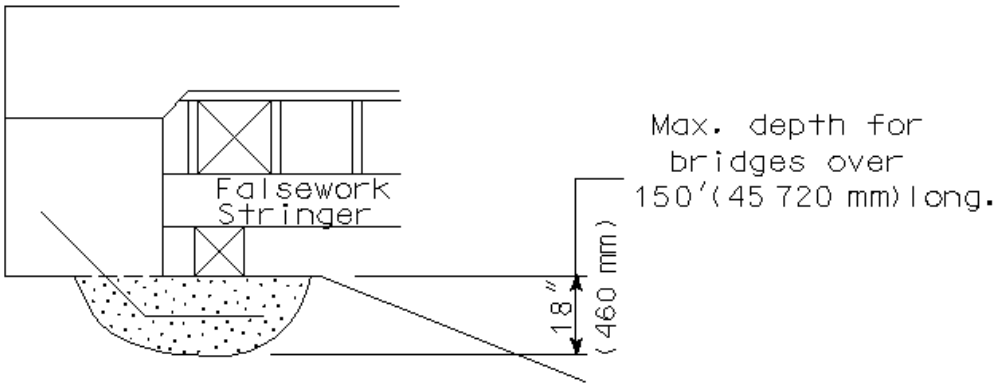

Figure 11.2.5-2. Concrete mudsill

All falsework and formwork accessories shall be positively identified and located on plans. Plans shall show complete details for all designed accessories, and plans shall show manufacturer and accessory designations for all proprietary accessories.

Hangers shall be arranged or secured for unbalanced concrete placement. Hangers over pier piles should be placed to avoid torsion on hanger struts.

11.2.6 Plan review

For cast-in-place concrete slab and concrete girder bridges the Iowa DOT Standard Specifications require that the contractor submit falsework plans for review [IDOT SS 2403.03, L, 7, a]. Plans are reviewed by the design office that prepared the original project plans, either the Office of Bridges and Structures or the engineering consultant.

11.2.6.1 Plan checklist

For falsework review, the plans submitted by the contractor are the source of material, member, connection, and configuration information. If the information is incomplete the reviewer will need to request additional information or make worst-case assumptions that may lead to impractical or uneconomical falsework. The following guidelines are of use to the designer and the reviewer in determining whether falsework plans are sufficient for review [IDOT SS 2403.03, L, 7, a].

- Falsework plans shall be sealed and signed by an Iowa licensed Professional Engineer [IDOT SS

2403.03, L, 1, a].

- Plans should be on sheets of sufficient size to allow for corrections and to facilitate reading and handling. In extreme cases, illegible plans will require resubmission.

- Complete description of the structure should appear on the plans along with design number, county, and project number. A contractor may use the same set of details for different bridges, but each set of plans should be specific for the site.

Some latitude is permissible, but a good set of falsework plans should include the following.

(1) Plan of structure
  (a) Bridge spans, width of deck, and location of stage joint (if any).
  (b) Span length between falsework supports.
  (c) Transverse spacing and lengths of stringers.
  (d) Orientation of plywood sheets if advantage is taken of increased strength parallel with face grain.

(2) Elevation or Longitudinal Section of Structure.
  (a) Location of falsework supports including height of bent, pile bearing, and pile lengths for specific bents.
  (b) Longitudinal X-bracing or knee bracing for pile bents over 10 feet (3 m) in height, if bents are not positively attached to the stringers [IDOT SS 2403.03, L, 3, c].
  (c) Details of shores or posts on sills that must be braced laterally and longitudinally.
  (d) Stringer material, size, and span with section oriented correctly for maximum strength.
  (e) Stringer bearing details and, as required, attachment details to supporting caps and brackets.
  (f) Details of hanger-waler system at pier cap.
  (g) Support bracket details at abutments.
  (h) Transverse joist size, spacing, and some system to prevent individual collapse. If stringers are wood, toe-nailing will hold the joist bottoms in place. If stringers are steel, bottoms of joists should be spaced with a longitudinal wood strip, by a nailer attached to the stringer, or by bridging.
  (i) Sheathing type, thickness, and grade or commercial name. Orientation of plywood may be shown on the longitudinal section.

(3) Cross Section of Structure
  (a) Pile spacing, height of bents, and minimum embedment of piles for bents 10 feet (3 m) or less in height, if piles provide lateral stability without sway bracing.
  (b) Cap material, size, and method of attachment to piles.
  (c) Stringer spacing on cap and attachment of stringers to cap if appropriate and if not shown elsewhere.
  (d) Provision for shimming, wedging, or jacking for height adjustment.
  (e) Sway bracing for bents over 10 feet (3 m) high. Bracing shall be at least 2 x 10, but 3 X 8 bracing is preferable.
  (f) Heights of bents, pile bearing, and pile lengths, if not shown on the longitudinal section.
  (g) Bridging or diaphragm system for stringers over each falsework support. In addition to the system at supports, intermediate bridging may be needed to support the stringer compression flange. Wood joists without a bolted nailer are not considered as support for a steel stringer compression flange.

(4) Falsework Deflection Diagram
  The deflection diagram usually is necessary for setting the screed rails. The 1/800 of the span length or 1.0 inch (25 mm) deflection limits in the Iowa DOT Standard Specifications [IDOT SS 2403.03, L, 6, a] refer to the final bridge soffit profile after forms are stripped. For the forms and falsework, deflection of sheathing and joists shall be limited to 1/360 of the

span length, but there is no specification limit to the falsework stringer deflection. However, for setting of the screed rails, if the stringer deflection exceeds 1/4 inch (6 mm), the designer should provide the deflection diagram.

11.2.6.2 Design review checklist

Procedures for reviewing falsework plans will vary with each project. The following checklist is only a guide for the reviewer, assuming a design using the traditional Iowa DOT standard described in these articles, and must be used with engineering judgment.

(1) Floor sheathing
- (a) Thickness, grade, and type of plywood sheathing should be shown on plans. If the type of sheathing is not shown, request the type from the contractor. The default grade listed in the Iowa DOT Standard Specifications [IDOT SS 2403.03, L, 5, c, 2)], Plyform Class I, should be used in the check only if the sheathing is of that quality or better.
- (b) Orientation of face grain plies should be shown on plans. If the orientation is not shown, assume it to be the unfavorable case, face grain perpendicular to span.
- (c) Determine the load for concrete, forms, and construction.
- (d) Consider the sheathing to be continuous over three spans.
- (e) Check the joist spacing using tables in ACI's *Formwork for Concrete.*
- (f) If the joist spacing is inadequate for face grain perpendicular to span but is adequate for face grain parallel with span, note the required orientation on the plans but do not recommend a change in joist spacing.

(2) Wood joists
- (a) Determine the joist load, including the joist weight.
- (b) Consider the joists continuous over three spans unless stringer spacing exceeds 6 feet (1.830 m).
- (c) Use moment, shear, and deflection formulas in ACI's *Formwork for Concrete.*
- (d) Review the critical bending stresses.
- (e) Review the critical shear stresses. Allow for the overhang at edge form and safety rail.
- (f) Review the maximum bearing stress on stringers.
- (g) Review deflection as required by Iowa DOT specifications [IDOT SS 2403.03, L, 6, b]
- (h) Verify the presence of bridging or other provision for joist stability above steel stringers.

(3) Wood stringers
- (a) Determine the stringer load, including the stringer weight. Because concentrated loads from joists are closely spaced, consider the joist load to be uniform for the stringer tributary area.
- (b) Review the possibility of uplift due to continuity.
- (c) Use moment, shear, and deflection formulas in ACI's *Formwork for Concrete.*
- (d) Review the critical bending stresses.
- (e) Review the critical shear stresses.
- (f) Review the maximum bearing stress on stringers at cap.
- (g) Review deflection as required by Iowa DOT Standard Specifications [IDOT SS 2403.03, L, 6, b]. For most projects the plans should include a deflection diagram. However, if deflections do not exceed 1/8 inch (3 mm), a deflection diagram is not required because crushing and take-up will amount to as much as the deflection.
- (h) Verify that the stringers have bridging at supports and at intermediate intervals of 8 to 10 feet (2.4 to 3 m).
- (i) Verify the stability of blocking, jacking, wedging, etc.

(4) Steel stringers
- (a) Determine the stringer section properties. If the steel shape designation is not current and properties are not given on the plans, use the most unfavorable section properties for the shape depth as given in *AISC Rehabilitation and Retrofit Guide, Steel Design Guide*

Series 15 or the previous publication *Iron and Steel Beams.*

(b) Determine the stringer load, including the stringer weight. Because concentrated loads from joists are closely spaced, consider the joist load to be uniform for the stringer tributary area.
(c) Review the possibility of uplift due to continuity.
(d) Determine the steel grade and allowable stresses. If steel grade is not specified on the plans, use the allowable stresses given in the AASHTO guide [AASHTO-Temp 2.1.2].
(e) Review the critical bending stresses. Note that the compression flange will be critical; review for intermediate support of the compression flange. The compression flange support can be provided by a system of bridging or x-bracing with tension rods. The bridging or bracing should be full depth of the stringer web, should be detailed, and should be located on the plans.
(f) Review the critical shear stresses and web buckling. Verify that there is bridging or x-bracing at supports for stability.
(g) Review the bearing on wood caps and walers.
(h) Review deflection as required by Iowa DOT Standard Specifications [IDOT SS 2403.03, L, 6]. For most projects the plans should include a deflection diagram. However, if deflections do not exceed 1/8 inch (3 mm), a deflection diagram is not required because crushing and take-up will amount to as much as the deflection.
(i) Stringers may need to be attached to caps and, if so, the attachment should be shown on the plans. Check the stability of any jacks, shims, wedges, etc. under stringers.

(5) Timber caps and walers
(a) Timber caps should be a minimum of 10 x 10 nominal and should not be built up of smaller members.
(b) Determine the stringer reactions that will be applied as concentrated loads to the cap. Cap weight may be lumped and applied with the stringer loads or neglected.
(c) Use moment and shear formulas in ACI's *Formwork for Concrete.*
(d) Review the critical bending stresses.
(e) Review the critical shear stresses. Allow for an overhang, if present.
(f) Review the maximum bearing stresses on the cap at stringers and at piles.
(g) Verify the attachment of cap to piles.
(h) Review the capacity of hangers or brackets for walers.

(6) Steel caps and walers
(a) Determine the cap section properties. If the steel shape designation is not current and properties are not given on the plans, use the most unfavorable section properties for the shape depth as given in *AISC Rehabilitation and Retrofit Guide, Steel Design Guide Series 15,* or the previous publication *Iron and Steel Beams.*
(b) Determine the stringer reactions that will be applied as concentrated loads to the cap. Cap weight may be lumped and applied with the stringer loads or neglected.
(c) Use moment and shear formulas in *Formwork for Concrete* by ACI.
(d) Review the critical bending stresses.
(e) Review the critical shear stresses.
(f) Review reaction points for stiffeners. Edge bearing of steel stringers will generally require stiffeners to avoid flange crippling of the cap or walers.
(g) Verify the attachment of cap to piles.
(h) Verify that bents over 10 feet (3 m) tall with steel stringers on steel caps have longitudinal bracing.
(i) Review the capacity of hangers or brackets for walers.

(7) Piles
(a) Determine the total load to be applied to the bent and distribute the load equally to all piles.
(b) Review the pile load shown on the plans.

(c) Review the pile length and minimum embedment for lateral stability, if pile bents are not sway braced. If braced, review sway bracing.

(8) Post or framed bent on sill
- (a) Verify that the bent is braced laterally and longitudinally. Bracing is required for any height.
- (b) Review cap and sill. Refer to (5) and (6) checklists above as needed.
- (c) Verify that cap and sill are attached to posts.
- (d) Verify that sill is attached to pile support, or check that sill has adequate bearing area on soil.
- (e) Review posts as columns.

(9) Pier caps
- (a) Verify arrangement of brackets, hangers, and walers. The arrangement must accommodate unbalanced loads and must not load single legs of hangers, which would cause torsion.
- (b) Check column collar brackets. If brackets are proprietary, specific catalog information must be supplied with the falsework plans.
- (c) Check hanger capacity with stringer reactions as concentrated loads on the waler. If hangers are proprietary, specific catalog information must be supplied with the falsework plans. Note that catalogs may give the rated hanger capacity either for a single leg or for both legs.
- (d) Check soffit sheathing for face grain across supports.
- (e) Verify that side forms are supported with studs or blocked against kick-out.

(10) Abutment brackets
- (a) Verify that stringer blocking is provided where needed. Stringer deflection will cause edge bearing.
- (b) Verify that brackets are stiffened.
- (c) Consult form accessory references for pull-out and shear ratings. Extrapolate design ratings if the accessory is adapted for use as an abutment bracket.
- (d) Check tension and shear on bolts. Assume A307 bolts unless plans specify a higher grade.

11.2.6.3 Reviewed copy distribution

For those projects for which review is required, distribution of six reviewed copies will be made as follows:

1 – Office of Bridges and Structures copy for bridge file with comments in red and with initials of reviewer and date
1 – Office of Construction copy with comments in red
2 – Resident Construction Engineer (RCE) with comments in red
2 – Contractor with comments in red