TABLE OF CONTENTS ~ CULVERT DESIGN

8 Culvert Design
- 8.1 General
  - 8.1.1 Policy overview
  - 8.1.2 Design information
  - 8.1.3 Definitions
  - 8.1.4 Abbreviations and notation
  - 8.1.5 References
    - 8.1.5.1 Direct
    - 8.1.5.2 Indirect
- 8.2 Reinforced concrete box (cast-in-place)
  - 8.2.1 Loads
    - 8.2.1.1 Dead
    - 8.2.1.2 Live
    - 8.2.1.3 Dynamic load allowance
    - 8.2.1.4 Water
    - 8.2.1.5 Earth pressure
    - 8.2.1.6 Construction
  - 8.2.2 Load application
    - 8.2.2.1 Load modifier
    - 8.2.2.2 Limit states
  - 8.2.3 Analysis and design
    - 8.2.3.1 Barrels
    - 8.2.3.2 Headwalls
      - 8.2.3.2.1 Wings
      - 8.2.3.2.2 Parapet
      - 8.2.3.2.3 Apron
      - 8.2.3.2.4 Curtain wall
    - 8.2.3.3 Barrel extensions
    - 8.2.3.4 Flumes and flume basins
    - 8.2.3.5 Other
  - 8.2.4 Detailing
    - 8.2.4.1 Standard plans
    - 8.2.4.2 Software
    - 8.2.4.3 Plan preparation
    - 8.2.4.4 General
      - 8.2.4.4.1 Excavation
      - 8.2.4.4.2 Granular blankets
      - 8.2.4.4.3 Keyways
      - 8.2.4.4.4 Reinforcement
    - 8.2.4.5 Barrels
      - 8.2.4.5.1 Roadway on slab
      - 8.2.4.5.2 Construction joints
        - 8.2.4.5.2.1 Transverse
        - 8.2.4.5.2.2 Longitudinal
      - 8.2.4.5.3 Bell joints
      - 8.2.4.5.4 Horizontally curved alignments
        - 8.2.4.5.4.1 Layout
        - 8.2.4.5.4.2 Transverse reinforcement
        - 8.2.4.5.4.3 Longitudinal reinforcement for single barrels
        - 8.2.4.5.4.4 Longitudinal reinforcement for multiple barrels
      - 8.2.4.5.5 Wall penetrations
        - 8.2.4.5.5.1 Pipes
        - 8.2.4.5.5.2 Weep holes

8.2.4.5.6 Settlement and camber
8.2.4.6 Headwalls
8.2.4.7 Inlets
8.2.4.7.1 Trash racks
8.2.4.7.2 Debris racks
8.2.4.7.3 Safety grates
8.2.4.7.4 End walls
8.2.4.7.5 Slope tapered inlets
8.2.4.7.6 Drop inlets
8.2.4.8 Outlets
8.2.4.8.1 Flumes
8.2.4.8.2 Scour Floors
8.2.4.8.3 Basins
8.2.4.9 Extensions
8.2.4.9.1 Connections
8.2.4.9.2 Skewed reinforcement
8.2.4.9.3 Bell joints
8.2.4.9.4 Backfill
8.2.4.10 Bridge replacements
8.2.4.11 Miscellaneous
8.2.4.11.1 Fish baffles or weirs
8.2.4.11.2 Drain pipe anchors
8.2.4.11.3 Pipe hand railings
8.3 Precast concrete box
8.3.1 Loads
8.3.2 Load application
8.3.3 Analysis and design
8.3.4 Detailing
8.3.4.1 Extensions
8.3.4.2 Miscellaneous
8.3.4.2.1 Fish baffles or weirs
8.3.4.2.2 Weep holes
8.4 Concrete pipe
8.4.1 Loads
8.4.2 Load application
8.4.3 Analysis and design
8.4.4 Detailing
8.4.4.1 Standard plans
8.4.4.2 Software
8.4.4.3 Plan preparation
8.4.4.4 General
8.4.4.5 Pipes
8.4.4.6 Headwalls
8.4.4.7 Inlets
8.4.4.8 Outlets
8.4.4.8.1 Flumes
8.4.4.9 Extensions
8.4.4.10 Miscellaneous
8.4.4.10.1 Pipe hand railings

8 Culvert Design

This section of *Bridge Design Manual* follows the current AASHTO LRFD Specifications and the following documents and related software:

- Cast-in-place box culverts
  - "CulvertCalc™IA Technical Manual", available with downloaded CulvertCalc™IA software
  - "CulvertCalc™IA User Manual", available with downloaded CulvertCalc™IA software
- Precast box culverts
  - "Precast Box Culvert Standards, Barrel and End Section Design Methodology", dated 29 November 2012

The documents and software listed above replace the documents and associated mainframe computer software listed below that were based on the AASHTO Standard Specifications:

- "Reinforced Concrete Box Culvert Design Criteria", dated 30 October 1981
- "Reinforced Concrete Culvert Design Criteria Sections 1.0 to 3.0 and Detail Criteria 4.0 to 19.0", last update issued January 2012.

8.1 General

8.1.1 Policy overview

A culvert is a drainage structure that passes under a roadway. In the office a culvert is located and designed by the Preliminary Bridge Section based on site hydrology and hydraulic principles and following *Guidelines for Preliminary Design of Bridges and Culverts, Appendix A, Culverts* [BDM 8.1.5.2] (that in the future will be rewritten for Section 3 of the Bridge Design Manual). Small culverts generally are constructed with standard pipe, and larger culverts are constructed with box sections, either cast-in-place or precast. For a reinforced concrete box culvert the Preliminary Bridge Section will set the height and opening width for one to three box culvert barrels, as well as the inlet and outlet components. Inlet and outlet components are intended to control water flow and sediment and to prevent erosion or scour.

Generally for typical site conditions the office now designs alternate cast-in-place and precast reinforced concrete single box culverts but limits use of precast for twin and triple barrel culverts. A cast-in-place or precast box culvert must be designed structurally based on live load and the height of fill above the culvert. For the office standard cast-in-place culvert plans the height of fill can range from zero, in which case traffic rides on the top slab of the culvert, to 55 feet (16.760 m) for single box culverts or 25 feet (7.620 m) for double or triple box culverts. For the office standard single precast box culverts the height of fill can range from 2 to 25 feet (600 mm to 7.620 m). When using the office standard plans the designer needs to give the height of fill on the plans so that the contractor can select the appropriate reinforcing and quantities.

For design of typical cast-in-place reinforced concrete box culverts the office relies on standard plans for single, twin, or triple barrels; bell joints; flared wing headwalls; parallel wing headwalls; flumes; flume bell joints; and flume basins. Cast-in-place barrel sections generally are limited in length to 38 feet (11.480 m), and the total length of the culvert should consist of 38-foot (11.480-m) sections plus shorter varying length end sections needed to meet the overall length. For design of cast-in-place reinforced concrete box culverts that do not fit standard plans the office uses CulvertCalc IA, LRFD software specially developed for the office. Additional features such as tapered or drop inlets, scour floors, handrails, trash racks, and fish baffles are specially designed and added to project plans as needed.

For design of precast box culverts the office provides standard plans for barrels, end sections, and some special details, but for production of typical precast box culverts the office gives the producer three options:

- Option A: ASTM C1577 barrels and Iowa DOT end sections from Single Precast Reinforced Concrete Box Culvert Standards
- Option B: Iowa DOT Single Precast Reinforced Concrete Box Culvert Standards
- Option C: BOXCAR barrel design (or equivalent) and Iowa DOT end sections from Single Precast Reinforced Concrete Box Culvert Standards

All options require shop drawing submittals for review and documentation, but only Option C requires approval by the Office of Bridges and Structures before fabrication. Precast box culverts also may be

used for culvert extensions in some cases, and the office has prepared several detail sheets for the connection between an existing box culvert and the precast extension.

When precast box culverts are used in stage construction the projects will need to be carefully planned so that the tongue and groove at the end of the first stage fits the tongue and groove at the start of the second stage. This may be accomplished by special attention to detailing of the tongue and groove for the start of the second stage or by procuring all of the precast sections in one contract and stockpiling the sections for the second stage.

In most cases the designer should develop plans for each reinforced concrete box culvert or box culvert extension as a stand-alone project. However, the culvert or extension usually becomes part of a new road, road widening, or road resurfacing project of the Office of Design. Considering the overall road project, the Office of Contracts may combine the culvert with other structures and roadwork to assemble an appropriate contract package. Any site-specific issues during construction then are worked out by the local Resident Construction Engineer (RCE).

Reinforced concrete box culverts often are not economical for spans or heights greater than 12 feet (3.600 m). To achieve greater flow-through capacity the office generally uses twin or triple barrels rather than extended spans.

Although a culvert is a drainage structure, if it is more than 20 feet (6.100 m) in length along the centerline of roadway between extreme ends of the opening of a single barrel or openings of multiple barrels, it will be classified as a bridge for the National Bridge Inventory. This classification does not affect the design of the culvert, but it ensures that the culvert will be inspected regularly as part of the Iowa DOT's bridge inspection program.

Reinforced concrete box culverts also generally are not economical in sizes less than 3 feet by 3 feet (900 mm by 900 mm). For relatively small amounts of drainage and heights of fill the office selects standard concrete pipe for culverts under paved roads, corrugated metal pipe for temporary culverts, and unclassified pipe for property entrances. For unclassified pipe the contractor may select from approved pipe materials.

8.1.2 Design information

Typically the Soils Design Section will provide a soils package for a box culvert project. The estimated settlement sheet in the package is important for design of camber and use of bell joints. The sheet also will require and show a granular blanket if needed. If the sheet is not provided, the designer shall contact the Soils Design Section for information.

8.1.3 Definitions

Apron refers to the reinforced concrete floor between wing walls at a typical reinforced concrete box culvert inlet or outlet. At an outlet a scour floor may be added beyond the apron. Apron also refers to the flared end section at the inlet and outlet for a pipe culvert.

Barrel refers to the main culvert component of rectangular or square cross section that passes under the roadway. The barrel functions as a pipe for ditch and small stream drainage.

Curtain wall, curtain, scour curtain, cut-off wall, return wall, or toe wall is the downturned edge at the outer end of a culvert inlet or outlet floor, flume, or flume basin. For sites that are difficult to excavate and dewater, construction personnel may allow the contractor the option of using sheet piling. See *Construction Manual,* Article 11.82 [BDM 8.1.5.2].

Double and Twin are interchangeable terms for two parallel box culvert barrels. Twin is the more traditional term and is found on standard plans.

Drop inlet is an inlet device that minimizes right-of-way by elevating a ditch or by reducing head-cutting of a draw upstream. A drop inlet typically is 3 to 20 feet (0.900 to 6.100 m) tall.

Effective floor thickness is the thickness of the cast-in-place culvert barrel floor or headwall apron after an assumed two-inch (50 mm) thick mud mat is deducted. The effective floor thickness is used in structural design of the floor.

Effective slab thickness is the thickness of the cast-in-place culvert slab after an assumed half-inch (13-mm) built-in (or integral) wearing surface is deducted when the slab also serves as the roadway surface. The effective slab thickness is used in structural design of the slab.

End wall is placed between headwall wings at a reinforced concrete box culvert or pipe culvert inlet to reduce right-of-way, to allow a location for tile outlets, or to match a streambed elevation for a culvert that is buried for environmental reasons or is buried to get below the road grade elevation. An end wall typically is one to two feet (300 to 600 mm) tall.

Fill height indicates the amount of soil above the top slab of the culvert. This dimension also is termed earth cover in ASTM C1577.

Floor (or base slab or footing) is the bottom slab in the barrel of a box culvert. The Iowa floor profile provides level surfaces on each side of a wall for placement of wall forms and a recess between them, which is called a frost trough. Iowa has used this frost trough profile rather than a flat floor since the 1930s.

Flume or flume chute is the parabolically curved device between parallel wings at a culvert outlet that provides a significant drop in elevation from culvert floor to downstream streambed elevation. Usually a flume terminates at a flume basin but, in some cases, a stub flume without a basin may be appropriate.

Flume basin is at the end of a flume chute and is typically buried 5 feet (1524 mm) below streambed elevation. A flume basin helps contain the scour resulting from the energy dissipated from the flume.

Frost trough (or flow channel) refers to the depression in the floor of a reinforced concrete box culvert barrel. Generally the frost trough detail has been used by the office since the 1930s. The frost trough is omitted in cases where a box culvert is used as a pedestrian underpass.

Headwalls include the parapet, wings, apron, and curtain wall.

Height (H) is measured inside the culvert barrel from underside of slab to top of floor at a wall in a cast-in-place box. Typically a frost trough depression is 4 inches (75 mm) below the start of the height dimension.

Interior wall is a wall between barrels in a twin or triple reinforced concrete box culvert. In a twin culvert the interior wall also may be called a center wall.

Length of a reinforced concrete cast-in-place or precast box culvert is measured back to back of parapets. On the office standard plans the precast box culvert parapets are referred to as lintel beams.

Mud mat is the bottom 2 inches (50 mm) of concrete in a cast-in-place box culvert floor. The mud mat is neglected in structural design.

Parapet is the upturned edge of the top slab at the end of a culvert barrel. It may also be called a lintel beam.

Reinforced concrete box (RCB), without further description, usually refers to a cast-in-place, reinforced concrete box culvert. This terminology developed in the office before precast box culverts were available. In a few cases context will indicate that reinforced concrete box refers to both cast-in-place and precast

box culverts. In this manual section the term “precast” will be added to specifically indicate a precast reinforced concrete box.

Scour floor is a slab placed between reinforced concrete box culvert headwalls near their ends at the outlet but below the apron.

Slab or top slab is the top of a reinforced concrete box culvert.

Span (S) is measured across the culvert barrel from inside surface of wall to inside surface of wall.

Stabilization berm is constructed at the toe of an embankment slope to provide a counterweight to resist a deep rotational slope failure. It generally has the effect of lengthening a culvert because the culvert needs to be extended through the stabilization berm.

Tapered inlet is a slope tapered inlet used to increase capacity of a culvert designed for inlet control. See Figure 8.2.4.7.5.

Triple is the term for three parallel box culvert barrels.

Wing or wing wall refers to each of the pair of flared or parallel walls at the inlet or outlet of a reinforced concrete box culvert.

8.1.4 Abbreviations and notation [AASHTO-LRFD 1.3.2.1, 3.6.1.1.2, 5.8.2.9, 5.8.3.4.2]

CMP, corrugated metal pipe
d_v, effective shear depth (inches) [AASHTO-LRFD 5.8.2.9]
H, height measured inside the culvert barrel from underside of slab to top of floor at a wall
Iowa DNR, Iowa Department of Natural Resources
MCFT, modified compression field theory [AASHTO-LRFD 5.8.3.4.2]
MPF, multiple presence factor [AASHTO-LRFD 3.6.1.1.2]
PEP, polyethylene pipe
RCB, reinforced concrete box
RCE, resident construction engineer
RCP, reinforced concrete pipe
S, span measured across the culvert barrel from inside surface of wall to inside surface of wall
SU8, the notional rating load (truck) given on page 6-67 of *The Manual for Bridge Evaluation, First Edition*
TS&L, type, size, and location
η_i, load modifier [AASHTO-LRFD 1.3.2.1]

8.1.5 References

8.1.5.1 Direct

Throughout the culvert section there are frequent, direct references to specific portions of standards, publications, and update memos. Direct references are included in brackets [ ] using the abbreviations given below. Applicable references to the AASHTO LRFD Specifications and, in a few cases, to the Standard Specifications are given with each article heading.

Although the latest editions are listed below there are some circumstances in which referenced documents have been prepared on the basis of previous editions.

[AASHTO division article, table, or figure] refers to AASHTO *Standard Specifications for Highway Bridges, 17th Edition (2002)* with current errata changes - design, seismic design, or construction division with article, table, or figure number.

[AASHTO-LRFD article, table, or figure] refers to *AASHTO LRFD Bridge Design Specifications, 5th Edition (2010)* with article, table, or figure number.

[BDM article, table, figure, or note] refers to *LRFD Bridge Design Manual* with article, table, figure, or plan note number. (Available on the Internet at http://www.iowadot.gov/bridge/manuallrfd.htm)

[IDOT SS article] refers to Iowa Department of Transportation *Standard Specifications for Highway and Bridge Construction, Series 2009* with article number. (Available on the Internet at: http://www.iowadot.gov/erl/current/GS/Navigation/nav.pdf/)

[OBS SS sheet number] refers to an Office of Bridges and Structures, "Standard Sheet" with sheet number. (Available on the Internet at: http://www.iowadot.gov/bridge/v8ebrgstd.htm)

[OD DM article, table, or figure] refers to the Office of Design, *Design Manual* with article, table, or figure number. (Available on the Internet at: http://www.iowadot.gov/design/dmanual/manual.html?reload)

[OD RDD sheet number] refers to the Office of Design, "Road Design Details" with sheet number. Formerly the detail manual was referred to as the "green book." (Available on the Internet at: http://www.iowadot.gov/design/desdet.htm)

[OD SRP sheet number] refers to an Office of Design, "Standard Road Plan" with sheet number. Formerly the plan manual was referred to as the "red book." (Available on the Internet at: http://www.iowadot.gov/design/stdrdpln.htm)

[OM IM number] refers to Office of Materials, Iowa Department of Transportation Instructional Memorandum number. (Available on the Internet at: http://www.iowadot.gov/erl/current/IM/Navigation/nav.pdf)

8.1.5.2 Indirect

Indirect references are general and infrequent sources of information that usually are not linked with specific article or section numbers.

American Association of State Highway and Transportation Officials (AASHTO). *Highway Drainage Guidelines, 4th Edition.* Washington: AASHTO, 2007.

American Association of State Highway and Transportation Officials (AASHTO). *Manual for Bridge Evaluation, First Edition.* Washington: AASHTO, 2008.

American Association of State Highway and Transportation Officials (AASHTO). *Roadside Design Guide, 4th Edition 2011.* Washington: AASHTO, 2008.

American Concrete Institute (ACI). *Building Code Requirements for Structural Concrete (ACI 318-11) and Commentary (ACI 318R-11).* Farmington Hills: ACI, 2011.

American Galvanizers Association. *GalvaSource.* Aurora: American Galvanizers Association, 2011 (Available on the Internet at: http://www.galvanizeit.org/images/uploads/publicationPDFs/North_American_Galvanizers_Listing.pdf)

American Institute of Steel Construction (AISC). *Steel Construction Manual, Fourteenth Edition.* Chicago: AISC, 2011.

American Society for Testing and Materials (ASTM). *2001 Annual Book of ASTM Standards*. West Conshohocken: ASTM, 2001.

Office of Bridges and Structures. *Guidelines for Preliminary Design of Bridges and Culverts, Appendix A, Culverts.* Ames: Office of Bridges and Structures. (Available on the Internet at: http://www.iowadot.gov/bridge/manualprelim.htm)

Office of Construction. *Construction Manual.* Ames: Office of Construction, Iowa Department of Transportation, 2011. (Available on the Internet at: http://www.erl.dot.state.ia.us/)

Sicking, D.L., R.W. Bielenberg, J.R. Rohde, J.D. Reid, R.K. Faller, and K.A. Polivka. "Safety Grates for Cross-Drainage Culverts. *Transportation Research Record 2060-08.* Transportation Research Board, National Research Council, Washington, DC, 2008.

Sunday, Wayne and Kyle Frame. *New Bridge Construction Handbook.* Ames: Office of Construction, Iowa Department of Transportation, 2000. (Available on the Internet at: http://www.iowadot.gov/construction/structures/bridge_construction_handbook.pdf)

8.2 Reinforced concrete box (cast-in-place)

Following are the plan development guidelines for projects that include cast-in-place culverts.

- Preliminary Bridge shall prepare the preliminary design (TS&L) for a cast-in-place culvert length. If the culvert structure is a candidate for either a precast or cast-in-place culvert, Preliminary Bridge will prepare the preliminary design (TS&L) for the cast-in-place culvert alternate. Refer to Section 8.3 for further information concerning the precast alternate.

- Preliminary Bridge should note the following when determining the cast-in-place culvert length:

  - The foreslope for a cast-in-place culvert should intercept the top of the parapet as shown in Figure 8.2.~~.~~
  - The overall length for the cast-in-place culvert should be adjusted so it is a whole foot length (converted to meters) needed to achieve the minimum back to back parapet length.
  - For parallel wing headwalls show Class E revetment around both headwalls as shown on the standard sheet [OBS SS 1092].

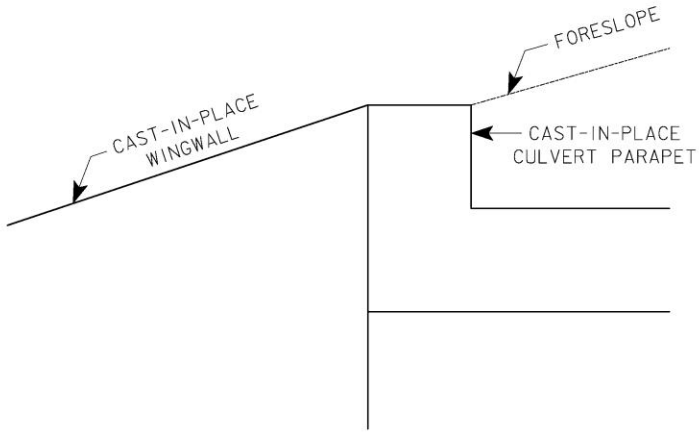

Figure 8.2. Foreslope-parapet intersection diagram

8.2.1 Loads [AASHTO-LRFD C12.6.1]

Except in very unusual cases there will be no barrier rail or headwall components exposed to potential vehicular collision [AASHTO-LRFD C12.6.1], and thus the vehicular collision load (CT) may be neglected in the design of typical reinforced concrete box (RCB) culvert components.

The configuration of typical RCB culverts is such that ice does not have a significant loading effect, and the designer may neglect ice load (IC).

For lateral pressures on culvert barrel walls and wings, the designer shall assume earth pressure at rest, except in the unusual case where wings are detached. In that case the designer may assume active soil pressure.

For typical skewed, rectangular or square reinforced concrete box (RCB) culverts and their components the designer may neglect the overall effects of unbalanced horizontal load. For skews greater than 45 degrees, however, the designer should consider the effects of imbalance in horizontal loads at culvert ends because the imbalance may cause a significant sliding force.

8.2.1.1 Dead [AASHTO-LRFD 3.5.1, 12.6.1, 12.11.2.2.1]

Self weight (DC) shall be applied in the design of all reinforced concrete box (RCB) culvert components except floors. Pavement weight (DW) and earth fill weight (EV) shall be applied when applicable in the design of RCB barrels. The designer shall determine the loads from the following:

- Culvert self-weight (DC): 0.150 kcf (2403 kg/m^3)
- Pavement weight (DW): 0.150 kcf (2403 kg/m^3) for concrete or as given for other pavement materials in the AASHTO LRFD Specifications [AASHTO-LRFD Table 3.5.1-1] and applied as a surcharge load, and
- Earth fill weight (EV): 0.120 kcf (1922 kg/m^3) for dry soil, unless more specific information is available.

Height of fill is measured from top of pavement to top of culvert. If there is pavement above the culvert without fill, apply the pavement load, and consider fill height to be 0 feet (0 mm). For fill heights greater than 2 feet (610 mm), round fill heights to the nearest foot (305 mm). In some cases, especially with stabilization berms, there will be multiple fill heights, and the culvert will need to be analyzed and designed for several heights. As with barrel extensions [BDM 8.2.3.3] the designer should consider the option of varying the barrel design to fit the different load conditions.

The earth fill load should be modified for soil-structure interaction [AASHTO-LRFD 12.11.2.2.1]. Except for unusual site conditions that require trench installation the designer shall use the soil-structure interaction factor for embankment installation.

When developing load combinations for culvert barrels, the designer shall apply the maximum or minimum load factor to the earth fill weight [AASHTO-LRFD 12.6.1], depending on the objectives of the load combination.

8.2.1.2 Live [AASHTO-LRFD 3.6.1.2.6, 3.6.1.3.3, 4.6.2.10, 12.11.2.1]

The designer shall apply HL-93 vehicular live load (LL) to culvert barrels as required by the AASHTO LRFD Specifications and, whenever LL is applied and the objective of the load combination is to maximize horizontal pressure, the designer shall also apply live load surcharge (LS). The designer need not apply the HL-93 lane load if using the approximate strip method for analysis [AASHTO-LRFD 3.6.1.3.3]. The designer shall apply LL to parapets in an extreme event limit state as indicated at the end of this article.

For box culvert barrels, live load is treated differently depending on the direction of traffic with respect to the culvert and depending on the amount of fill [AASHTO-LRFD 12.11.2.1]. For typical box culverts, except for skew angles greater than 45 degrees, traffic primarily will be parallel with the barrel span and AASHTO LRFD Case I will apply [AASHTO-LRFD 4.6.2.10.2].

For typical box culverts with less than 2.0 feet (600 mm) of fill, the designer shall apply wheel loads from the HL-93 vehicles using 20-inch wide by 10-inch long (510-mm by 255 mm) tire patches [AASHTO-LRFD 4.6.2.10] and shall distribute the live load based on the height of fill using a fill interaction factor of 1.00 (not 1.15).

The designer shall distribute live loads parallel with the span. For twin and triple barrel culverts the span of a single cell shall be used In the AASHTO LRFD formula for the distribution width perpendicular to the span [AASHTO LRFD Eq. 4.6.2.10.2-1].

When the fill height is 2.0 feet (600 mm) or greater, the designer shall follow the guidelines for distribution of wheel loads through earth fills [AASHTO-LRFD 3.6.1.2.6]. The designer shall distribute the live load based on the height of fill using a fill interaction factor of 1.00 (not 1.15). The designer shall consider a wheel load to be distributed uniformly over a 20-inch wide by 10-inch long (510-mm by 255 mm) tire patch. If the load distribution from live load plus dynamic load allowance based on distribution through an earth fill exceeds the load distribution determined from Case I above, the designer shall use the lower, Case I load distribution for determining moment, thrust, and shear.

Generally the designer should apply live load as follows:

- Run the HL-93 vehicles forward and backward.
- For fills less than 2 feet (600 mm), apply HL-93 vehicular loads in a single lane with the appropriate multiple presence factor (MPF).
- For fills 2 feet (600 mm) and greater, apply HL-93 vehicular loads in one or more lanes with appropriate MPFs.

For single box culverts, when the fill height exceeds both 8 feet (2.440 m) and the span length, live load effects may be neglected [AASHTO-LRFD 3.6.1.2.6]. For twin and triple culverts, only when the fill height exceeds the distance between the inside faces of end walls may the live load be neglected.

During development of CulvertCalc IA software the notional rating load, SU8 truck, was checked for all of the standard reinforced concrete box designs. The SU8 truck never controlled the design.

For a reinforced concrete box culvert parapet the designer shall assume a modified extreme event, in which the full force of an HL-93 truck wheel impacts the parapet as follows.

- Single 16-kip (71-kN) wheel load
- Multiple presence factor 1.20
- Load factor 1.00 (not 1.75)
- Dynamic load allowance 1.33

8.2.1.3 Dynamic load allowance [AASHTO-LRFD 3.6.2.2]

The designer shall apply dynamic load allowance (IM) with the HL-93 truck and tandem in the design of culvert barrels and IM with the HL-93 truck wheel load in the design of culvert parapets.

For fill heights less than 8 feet (2.440 m), the designer shall determine the dynamic load allowance (IM) from the AASHTO LRFD Specifications [AASHTO-LRFD 3.6.2.2]. No dynamic load allowance is required when the fill height is greater than 8 feet (2.440 m).

8.2.1.4 Water [AASHTO-LRFD 3.7.3.1]

The designer shall apply water loads (WA) to culvert barrels, aprons, and curtain walls as discussed below.

The designer shall check a culvert barrel with internal water pressure (WA) considering the culvert to be completely full, along with maximum downward load and minimum horizontal inward load. The designer also shall check the culvert without internal water pressure considering the culvert to be empty, along with minimum downward load and maximum inward horizontal load.

The designer shall consider buoyancy in loading of the apron.

Although there is no usual lateral water load on a culvert curtain wall, soil may be scoured away in front of the wall. To consider that condition the designer shall check the design of the wall for a stream pressure load of 15 ft/s (4.600 m/s) [AASHTO-LRFD 3.7.3.1].

8.2.1.5 Earth pressure [AASHTO-LRFD 3.4.1, 3.11.5.5, 3.11.6.4, 3.11.7]

The designer shall apply horizontal earth pressure (EH) to culvert barrel walls, wing walls, and parapets.

Unless more site-specific information is available or the Soils Design Section recommends otherwise, the designer may use horizontal earth pressures (EH) based on equivalent fluid weights of 0.060 kcf and 0.030 kcf (961 kg/m^3 and 481 kg/m^3) for barrels, wings, and parapets. This equivalent fluid loading is based on free-draining backfill [AASHTO-LRFD 3.11.5.5]. The lower fluid weight should not be combined with the minimum load factor assigned for horizontal earth pressures [AASHTO-LRFD 3.11.7, Table 3.4.1-2]; therefore, use a load factor of 1.00 with the 0.030 kcf minimum load.

For load cases with live load and the objective to maximize horizontal pressure the designer shall apply to culvert barrel walls a uniform horizontal pressure from live load surcharge (LS) as for abutments perpendicular to traffic [AASHTO-LRFD Table 3.11.6.4-1]. For the culvert barrel the “abutment height” shall be taken from the top of pavement to bottom of floor, and the equivalent height then interpolated from the AASHTO LRFD table.

8.2.1.6 Construction

Reserved.

8.2.2 Load application

8.2.2.1 Load modifier [AASHTO-LRFD 1.3.2, 3.4.1, 12.5.4]

Factored loads shall be adjusted by the load modifier, η_i, which is the product of modifiers for ductility, redundancy, and operational importance [AASHTO-LRFD 1.3.2, 3.4.1]. For typical cast-in-place or precast reinforced concrete culverts the modifiers for ductility and operational importance shall be taken as 1.0. For dead load, live load, dynamic load allowance, and construction loads the modifier for redundancy shall be taken as 1.0, but for earth loads EH_{max} and EV_{max} only, the modifier for redundancy shall be taken as 1.05 [AASHTO-LRFD 12.5.4].

8.2.2.2 Limit states [AASHTO-LRFD C12.5.3]

Buried structures such as box culverts are shielded from many typical bridge loads. As a result, typical box culverts need to be investigated only as follows:

- Service I for crack control
- Strength I for flexure, compression, and shear

The designer need not investigate the fatigue limit state [AASHTO-LRFD C12.5.3].

8.2.3 Analysis and design

Cast-in-place reinforced concrete box (RCB) culverts shall be designed structurally by the load and resistance factor design (LRFD) method. For design conditions that do not fit the available standard designs, such as variable fill over the length of a RCB culvert barrel, the office prefers that the designer use CulvertCalc IA, LRFD software on which the standard culvert barrel designs are based.

RCB culverts less than 3 feet by 3 feet (900 mm by 900 mm) in cross section are not economical, and the designer should consider pipe culverts for relatively small cross sections. For RCB barrels and headwalls the following minimum thicknesses apply:

- Slab: 8 inches (200 mm)
- Walls: the larger of 9 inches (225 mm) or one inch per foot (25 mm per 300 mm) of clear height, H

- Floor: 10 inches (250 mm), which includes a 2-inch (50-mm) mud mat that is not considered structural
- Apron: 11 inches (275 mm), which includes a 2-inch (50-mm) mud mat that is not considered structural

Unless otherwise specified, cast-in-place reinforced concrete materials shall be:

- Normal weight reinforced concrete with unit weight of 0.150 kcf (2400 kg/m^3),
- Class C concrete with f'_c = 4 ksi (28 MPa), and
- Grade 60 (Grade 420) reinforcement with f_y = 60 ksi (420 MPa).

When the Soils Design Section or geotechnical consultant does not provide site-specific information the designer should use the following cohesionless soil properties in design.

- Angle of internal friction (φ) 30 degrees
- Unit weight of saturated soil 0.135 kcf (2160 kg/m^3)
- Unit weight of dry soil 0.120 kcf (1920 kg/m^3)
- Unit weight of water 0.0624 kcf (1000 kg/m^3)

In general, the designer should model components of box culverts using typical 12-inch (305-mm) wide strips for analysis and design.

8.2.3.1 Barrels [AASHTO-LRFD 3.4.1, 4.6.2.1.4, C5.7.3.2, 5.7.3.3.2, 5.7.3.4, 5.7.4.2, 5.8.3.4.1, 5.10.8, 5.14.4.1, 5.14.5.3, 12.5.5, 12.11.2.1, C12.11.3, 12.11.4.2, 12.11.4.3.1]

The designer shall develop Strength I and Service I load combinations for design of RCB barrels. As a minimum, the factored load combinations shall include: (1) maximum vertical and minimum horizontal load, (2) minimum vertical and maximum horizontal load, and (3) maximum vertical and maximum horizontal load. The designer shall use AASHTO LRFD maximum and minimum load factors for dead load and earth pressure [AASHTO-LRFD Table 3.4.1-2], except that the minimum load factor for earth pressure (EH) should be taken as 1.00 [BDM 8.2.1.5]. For typical barrels the designer may apply lateral loads under balanced conditions so that there are no sliding forces.

The designer should model the culvert barrel as a slice through the barrel, a 12-inch (305-mm) wide rigid frame with sidesway that will occur only with unsymmetrical live load. The frame should be idealized with members at the centerlines of slab, walls, and floor. Section properties shall not include corner fillets, the mud mat below the floor, or the integral wearing surface used when the roadway is on the top slab.

The designer should design a barrel wall for the larger of the computed moments or the moment from a minimum axial load eccentricity (e):

$$e = 0.6 + 0.03H \geq 1.0 \text{ inch} \quad (e = 15 + 0.03H \geq 25 \text{ mm})$$

There are two options that the designer may consider for the soil pressure below the floor: uniform or linearly varying based on unsymmetrical loads, as for a rigid body. The standard culvert barrel designs are based on the second option. For significantly unsymmetrical loads the rigid body analysis option will indicate negative soil pressure (tension) below part of the floor, which may be assumed to exist for the analysis. The designer does not need to consider skew effects when the skew is 45 degrees or less.

The reinforcing pattern for the rigid frame generally should follow the standard culvert barrel designs. Single barrels are designed with straight, full length bars on the inside of the slab, walls, and floor; partial length bars on the outside of slab and floor; and spliced full-length bars on the outside of walls. Double and triple barrels are designed with straight short and full-length bars inside; short and full length bars outside; spliced full length bars in outside walls; and full length bars in interior walls. Guidelines for bar identification and detailing are given in the reinforcement article [BDM 8.2.4.4.4].

Review the reinforcement article [BDM 8.2.4.4.4] and consider the following when selecting reinforcement:

- Provide shrinkage and temperature reinforcement on the inside faces of culvert slabs, walls, and floors and in the top of the slab for culverts with no fill [AASHTO-LRFD 5.10.8].
- For a culvert barrel slab with 2 feet (610 mm) or less of fill, provide transverse distribution reinforcement in the bottom of the slab [AASHTO-LRFD 5.14.4.1].

The designer shall use the flexure and shear resistance factors given in the AASHTO LRFD Specifications for reinforced concrete cast-in-place box structures [AASHTO-LRFD Table 12.5.5-1].

When determining tension reinforcement for flexure, the designer shall neglect reinforcement on the compression side. Set $\rho_{max} = 0.634\rho_{balanced}$ to ensure a tension controlled section with $\varphi = 0.90$. The designer shall provide minimum reinforcement for flexure [AASHTO-LRFD 12.11.4.3.1, 5.7.3.3.2].

When determining the maximum negative moment reinforcement, the designer shall use the moment at the section where the combined depth of the uniform member (slab or wall) and haunch is 1.5 times the thickness of the member [AASHTO-LRFD C5.7.3.2.1]. See below for the definition of the haunch in a floor with a frost trough. The office does not use the optional location for maximum negative moment in culverts [AASHTO-LRFD 12.11.4.2].

For the transverse edges of a culvert barrel slab with less than 2 feet (610 mm) of fill, except at the parapets, the designer shall check the need for an edge beam [AASHTO-LRFD 12.11.2.1, 4.6.2.1.4b]. Typically an edge beam will not be required and, in that case, the designer shall provide extra reinforcement by spacing reinforcement at 3 inches, 4.5 inches, and 4.5 inches (75 mm, 115 mm, and 115 mm) from the end. The additional edge reinforcement also may require adjustment of wall reinforcing.

The designer shall consider compression forces in design of culvert barrel walls but need not consider compression forces in design of the slab and floor. The designer need not consider slenderness effects in design of box culvert barrel walls.

Based on past practice the office limits the maximum percentage of vertical reinforcement in walls to 4%. The minimum percentage of vertical reinforcement may be based on a reduced effective area [AASHTO-LRFD 5.7.4.2], but the effective area shall not be less than 50% of the gross area. The reduced area, as well as the gross area, shall be capable of resisting all applicable load combinations.

The designer shall check shear at a distance d_v from the end of a corner haunch for all barrel members except for slabs with less than 2 feet (610 mm) of fill, in which case the designer shall check at the end of the haunch. The haunch in a floor with a frost trough should be defined as a 45-degree haunch with a size the smaller of the (1) vertical or (2) sum of horizontal dimensions (a relatively unlikely case).

After considerable study of the AASHTO LRFD Specifications and research publications and numerous trial runs of CulvertCalc IA the office has decided to use the following concrete shear resistances for standard designs, and these resistances should be used for special designs. The office does not use shear reinforcement.

- Single box, slab and floor, less than 2 feet (610 mm) of fill [AASHTO-LRFD 5.8.3.4.1]

$$v_c = 2\sqrt{f'_c}(psi) = 0.0632\sqrt{f'_c}(ksi)$$

- Single box, slab and floor, 2 feet (610 mm) or more of fill [AASHTO-LRFD 5.14.5.3]

$$v_c = 2.14\sqrt{f'_c} + 4600\rho\frac{V_u d}{M_u}(psi) = 0.0676\sqrt{f'_c} + 4.6\frac{A_s}{bd_e}\frac{V_u d_e}{M_u}(ksi)$$

$$v_c \geq 3\sqrt{f'_c}\ (psi) = 0.0948\sqrt{f'_c}\ (ksi)$$
$$v_c \leq 4\sqrt{f'_c}\ (psi) = 0.126\sqrt{f'_c}\ (ksi)$$

Note: $V_u d_e / M_u \leq 1.0$

- Single box, walls [AASHTO-LRFD 5.8.3.4.1]

$$v_c = 2\sqrt{f'_c}\ (psi) = 0.0632\sqrt{f'_c}(ksi)$$

- Double and triple box, slab and floor, less than 2 feet (610 mm) of fill [AASHTO-LRFD 5.8.3.4.1]

$$v_c = 2\sqrt{f'_c}\ (psi) = 0.0632\sqrt{f'_c}(ksi)$$

- Double and triple box, slab and floor, 2 feet (610 mm) or more of fill [AASHTO-LRFD 5.14.5.3]

$$v_c = 2.14\sqrt{f'_c} + 4600\rho\frac{V_u d}{M_u}\ (psi) = 0.0676\sqrt{f'_c} + 4.6\frac{A_s}{bd_e}\frac{V_u d_e}{M_u}(ksi)$$
$$v_c \leq 4\sqrt{f'_c}\ (psi) = 0.126\sqrt{f'_c}\ (ksi)$$

Note: $V_u d_e / M_u \leq 1.0$

- Double and triple box, walls [AASHTO-LRFD 5.8.3.4.1]

$$v_c = 2\sqrt{f'_c}\ (psi) = 0.0632\sqrt{f'_c}(ksi)$$

For a special project for which the designer has approval to use modified compression field theory (MCFT) [AASHTO-LRFD 5.8.3.4.2] in lieu of the shear resistances above, the maximum aggregate size should be taken as ¾ inch (19 mm).

The designer shall use the smaller of the actual clear cover or 2.25 inches (57 mm) when checking crack control [AASHTO-LRFD 5.7.3.4]. The designer may consider thrust to reduce crack control requirements [AASHTO-LRFD C12.11.3]. Crack control exposure factor shall be taken as 1.00 except when the roadway is on the top slab, in which case the exposure factor shall be taken as 0.75.

8.2.3.2 Headwalls [AASHTO-LRFD 5.10.8]

All headwall components shall be designed for crack control with an exposure factor of 1.00. The designer shall provide shrinkage and temperature reinforcement for all exposed surfaces [AASHTO-LRFD 5.10.8].

8.2.3.2.1 Wings

The designer shall develop Strength I and Service I load combinations for maximum effects for design of RCB wings. Unless wings are isolated from the culvert barrel, earth pressure should be based on the at-rest condition (K_o = 0.500) because the wings are supported laterally at the culvert barrel. The back slope

for determining earth pressure should be based on the skew of the wall with respect to the typical 3:1 (horizontal to vertical) highway foreslope. Load combinations need not include live load surcharge (LS).

The typical culvert wings should be modeled with vertical 12-inch (305-mm) wide strips. At the barrel the wing strip may be idealized as a propped cantilever, and from the three-quarter height location to the end may be idealized as a cantilever.

The designer should consider reducing vertical reinforcement at mid-length of a wing. Horizontal reinforcement shall extend into the barrel beyond the back of the parapet the larger of (1) 2 feet (600 mm) or (2) a Class C lap splice.

8.2.3.2.2 Parapet

In addition to dead load and earth pressure in Strength I and Service I, the designer shall apply the live load of an HL-93 truck wheel in a modified extreme event limit state [BDM 8.2.1.2].

Minimum longitudinal reinforcement in a parapet shall be 2 - #7 (#22) with minimum transverse #4 (#13) bent bars at 6 inches (150 mm).

When the culvert barrel slab thickness joining the headwall is greater than 20 inches (500 mm), the headwall parapet height shall be extended so the top of the parapet is a minimum of 6 inches (150 mm) above the culvert barrel slab. The extended height of the parapet shall be to the nearest whole inch (25 mm). This detail is available as a cell and shall be completed for the headwall size and included in the plans in lieu of a modified headwall standard sheet.

8.2.3.2.3 Apron

For the apron in Strength I and Service I limit states, in addition to the effects of loads caused by frame action from the wings, the designer shall consider buoyant forces [BDM 8.2.1.4].

Reinforcement in the top of the apron should be adequate to resist at least $1.2M_{cr}$, which often controls.

8.2.3.2.4 Curtain wall

Generally there is no horizontal load on the curtain wall but, to design conservatively in case there is streambed scour, in Strength I and Service I the designer shall assume a steam flow design pressure [BDM 8.2.1.4].

For sites that are difficult to excavate and dewater, construction personnel may allow the contractor the option of using sheet piling in place of the reinforced concrete curtain wall. See *Construction Manual,* Article 11.82 [BDM 8.1.5.2].

8.2.3.3 Barrel extensions

At sites where the shoulder slopes are being improved for safety reasons or where additional traffic lanes are being added, culverts are replaced or extended. For extensions of single box culverts the office has three standard sheets [OBS SS 1043, 1044, and 1047]. The first standard [OBS SS 1043] has two sheets that are for all single barrel extensions, the second [OBS SS 1044] is for extensions to single barrel culverts with existing flared headwalls, and the third [OBS SS 1047] is for parapet and transition details. Guidelines for use of the standard sheets are given in the standard plans article [BDM 8.2.4.1].

As a general rule the culvert extension should be designed for the same loads as a new culvert and for the maximum height of either existing or new fill. This will ensure that the extension will be adequately designed should the roadway be widened again at some future date.

If traffic will ride directly on the extension slab, the slab must be designed accordingly, and the slab steel must be epoxy coated. Also, the designer shall add corbels to the walls to support the approach pavement [BDM 8.2.4.5.1].

When skewed culverts are extended, the transverse bars and corner bars may be placed parallel with the skewed headwall. When this occurs, the designer shall account for the increased span length. See the detailing article for additional information [BDM 8.2.4.9].

8.2.3.4 Flumes and flume basins

The office prefers that the designer use standard flume and flume basin designs [OBS SS 1070-1079]. For special designs, unless site conditions clearly indicate otherwise, the designer should assume a 2:1 horizontal to vertical back slope for flume and flume basin design. See the detailing article for additional information [BDM 8.2.4.8.1].

8.2.3.5 Other

A slope tapered inlet is designed for the span at the back face of the parapet and one foot (300 mm) of fill, which ensures a conservative design. See the detailing article for additional information [BDM 8.2.4.7.5].

8.2.4 Detailing

8.2.4.1 Standard plans

In April 2012 the office released new RCB Culvert Standards designed according to the AASHTO LRFD Specifications and interpretations and policies given in this section of the Bridge Design Manual. The general categories of standard sheets are outlined below.

Single Reinforced Concrete Box Culvert Standards

- RCB: General information and barrel details
- PWH: Parallel wing headwalls
- CBJ: Culvert bell joints

Twin Reinforced Concrete Box Culvert Standards

- TWRCB: General information and barrel details
- TWH: Flared wing headwalls
- TWCBJ: Culvert bell joints

Triple Reinforced Concrete Box Culvert Standards

- TRRCB: General information and barrel details
- TRH: Flared wing headwalls
- TRCBJ: Culvert bell joints

These RCB Culvert Standards are quite similar to previous standards except that the headwalls for single RCBs are parallel rather than flared.

Following are guidelines for use of the standards for new culvert designs and culvert extension designs.

Case 1: New culvert, standard size, standard fill height, all skews

- Develop front sheet with additional culvert notes not listed on appropriate G1-12 Sheet.
- Refer to RCB Culvert Standards for barrel and headwall details, or detail appropriate inlet.

Case 2: New culvert, standard size, non-standard fill height

- Develop front sheet with culvert notes.
- Modify the appropriate barrel standard sheet, deleting all data and details that do not apply to the project, and include the sheet in the plans.
- Refer to RCB Culvert Standards for headwall details, or detail appropriate inlet.

Case 3: New culvert, non-standard size

- Develop front sheet with culvert notes.
- Modify the appropriate barrel standard sheet, deleting all data and details that do not apply to the project, and include the sheet in the plans.
- Modify the appropriate headwall details sheet, and include the sheet in the plans, or detail appropriate inlet.

Case 4: Culvert extension, standard size, standard fill height, 0-degree skew

- Use Standard Sheets 1043s1 and 1043s2 for front sheet.
- Use Standard Sheet 1047 for detailing concrete transition details.
- Refer to RCB Culvert Standards for barrel and headwall details, or detail appropriate inlet.

Case 5: Culvert extension, standard size, non-standard fill height, 0-degree skew

- Use Standard Sheets 1043s1 and 1043s2 for front sheet.
- Use Standard Sheet 1047 for detailing concrete transition details.
- If additional barrels are required, modify the appropriate barrel standard sheet, deleting all data and details that do not apply to the project, and include the sheet in the plans.
- Refer to RCB Culvert Standards for barrel and headwall details, or detail appropriate inlet.

Case 6: Culvert extension, non-standard size, 0-degree skew

- Use Standard Sheets 1043s1 and 1043s2 for front sheet.
- Use Standard Sheet 1047 for detailing concrete transition details.
- If additional barrels are required, modify the appropriate barrel standard sheet, deleting all data and details that do not apply to the project, and include the sheet in the plans.
- Modify the appropriate headwall details sheet, and include the sheet in the plans, or detail appropriate inlet.

Case 7: Culvert extension, standard size, standard fill height, skewed

- Use Standard Sheets 1043s1 and 1043s2 for front sheet.
- Use Standard Sheet 1044 for detailing existing culvert junction section.
- Use Standard Sheet 1047 for detailing concrete transition details.
- Refer to RCB Culvert Standards for remaining barrel details, if applicable.
- Refer to RCB Culvert Standards for headwall details, or detail appropriate inlet.

Case 8: Culvert extension, standard size, non-standard fill height, skewed

- Use Standard Sheets 1043s1 and 1043s2 for front sheet.
- Use Standard Sheet 1044 for detailing existing culvert junction section.
- Use Standard Sheet 1047 for detailing concrete transition details.
- If additional barrels are required, modify the appropriate barrel standard sheet, deleting all data and details that do not apply to the project, and include the sheet in the plans.
- Refer to RCB Culvert Standards for headwall details, or detail appropriate inlet.

Case 9: Culvert extension, non-standard size, skewed

- Use Standard Sheets 1043s1 and 1043s2 for front sheet.
- Use Standard Sheet 1044 for detailing existing culvert junction section.
- Use Standard Sheet 1047 for detailing concrete transition details.
- If additional barrels are required, modify the appropriate barrel standard sheet, deleting all data and details that do not apply to the project, and include the sheet in the plans.
- Modify RCB Culvert Standards for headwall details, or detail appropriate inlet.

The designer or detailer shall discuss all unusual situations with the supervising Section Leader.

8.2.4.2 Software

The standard plans have been designed with CulvertCalc IA, LRFD software that follows the design and detailing policies of the office. For design of a nonstandard reinforced concrete box culvert the office requires that the designer use CulvertCalc IA, unless the nonstandard condition does not fit within the parameters of the software. The designer shall discuss unusual design conditions with the supervising Section Leader.

8.2.4.3 Plan preparation

When preparing plans for RCBs, the designer and detailer should set culvert lengths to the nearest one foot, except that metric culvert lengths should be set to the nearest 100 mm.

8.2.4.4 General

8.2.4.4.1 Excavation

Excavation quantities for culverts are determined differently depending on whether the culvert is new or is an extension and whether there are low areas along the culvert that require fill. If the culvert is new, the current Iowa DOT Standard Specifications require that Class 20 excavation be computed using a width 2 feet (600 mm) greater than the width of the culvert footing and using side slopes of 1:1 horizontal to vertical [IDOT SS 2402.04, B, 4].

For culvert extensions, the quantity of Class 20 excavation is to be computed using a width 2 feet (600 mm) greater than the width of the culvert footing and using vertical planes parallel with the boundaries of the structure. For long extensions where additional lanes are added and the amount of Class 20 excavation would be similar to the amount for new culverts, the excavation should be calculated with side slopes of 1:1 horizontal to vertical as for new culverts. For long culvert extensions the designer shall include notes or details in the plans describing how the Class 20 excavation was calculated.

Occasionally low areas will exist along the proposed culvert. If these areas are large, usually the road contractor is required to place Class 10 fill before the culvert contractor is allowed to begin construction.

If areas to be filled are relatively small, the designer shall place a note on the plans requiring the culvert contractor to fill and compact the areas. When this work is performed by the culvert contractor it can be designated as being incidental to the bid item "Class 20 Excavation", if there is adequate suitable Class 20 excavation available. If there is inadequate suitable Class 20, the bid item “Class 24 Excavation” is required to provide the fill material. See Figure 8.2.4.4.1 for a culvert section with fill provided by the culvert contractor.

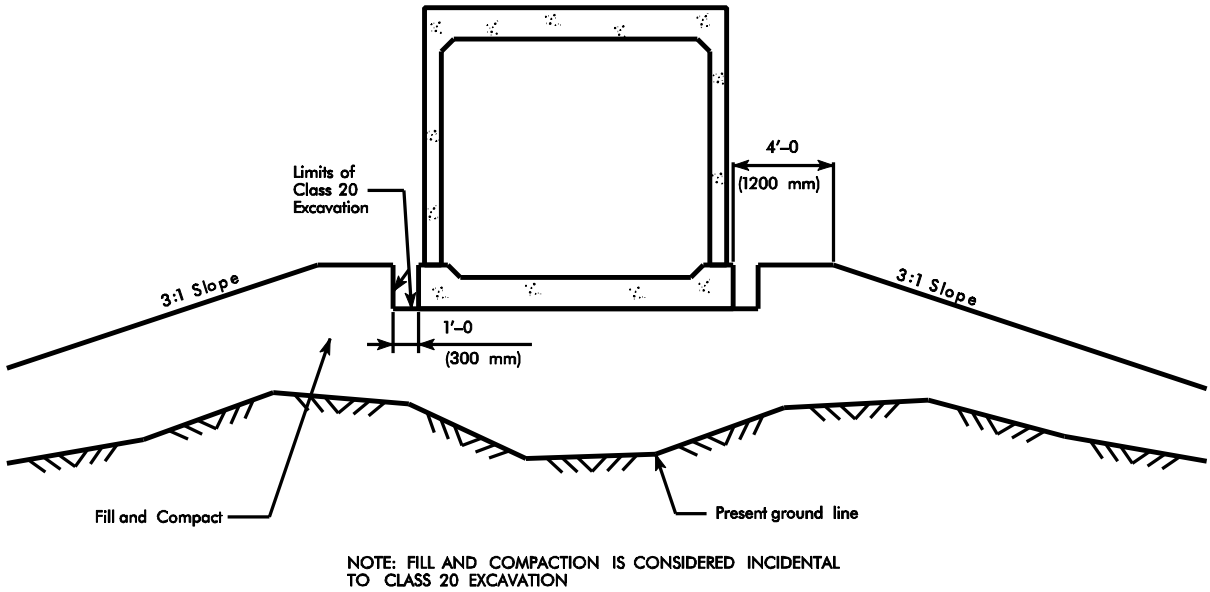

Figure 8.2.4.4.1. Fill and compaction section for fill placed by culvert contractor

The excavation limits discussed above are not applicable for special situations such as rock excavation or granular blankets.

8.2.4.4.2 Granular blankets

Depending on site soil conditions it may be necessary to place a granular blanket below a reinforced concrete box culvert. If bedrock is directly below a culvert, a blanket is required. When a blanket is necessary, the Soils Design Section will comment and provide dimensions on the estimated settlement sheet that is part of the soils package for the project. A general section through a granular blanket is shown in Figure 8.2.4.4.2.

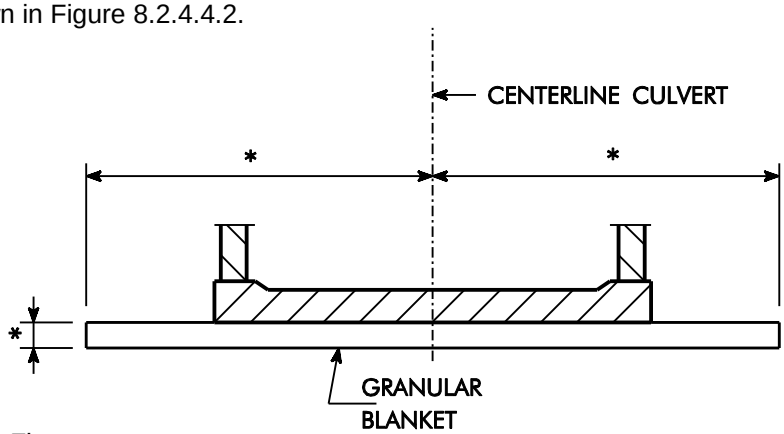

Figure note:

- Dimensions indicated with * are provided by the Soils Design Section

Figure 8.2.4.4.2. Granular blanket for reinforced concrete box culvert

The preferred policy is to have the culvert contractor install the granular blanket, in which case the detailer shall provide the details and quantities in the culvert plans. However, if the granular blanket is to be installed by the road contractor, the detailer should only add a granular blanket detail to the culvert plans for reference.

8.2.4.4.3 Keyways

At construction joints, such as those shown in Figures 8.2.4.5.3-1 8.2.4.5.2.2, the detailer shall provide keyways to link the two components together. The sides of the keyway form shall be beveled about 10 degrees so that the form is easier to remove. The bevel dimensions for a typical dimension lumber keyway form are shown in Figure 8.2.4.4.3.

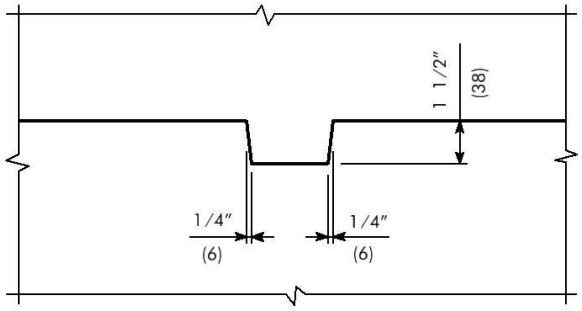

Figure 8.2.4.4.3. Typical keyway detail

8.2.4.4.4 Reinforcement [AASHTO-LRFD 5.7.3.3.2, 5.10.3.1.1, 5.10.3.2, 5.10.8, 5.12.3.1, 9.7.3.2]

For barrels and headwalls the minimum concrete cover over reinforcing steel shall be as shown in Table 8.2.4.4.4-1. The cover amounts in the table meet or exceed the cover required in the AASHTO LRFD Specifications [AASHTO-LRFD 5.12.3.1].

Table 8.2.4.4.4-1. Minimum clear cover

Location		Clear cover
Rebar edge to concrete surface	Typical minimum	2 inches (50 mm)
	Bottom of floor	3½ inches (90 mm)
	Top of floor	2¼ inches (55 mm)
	Roadway on top slab	2½ inches (65 mm)
Rebar end to concrete surface	Typical horizontal bar	2 inches (50 mm)
	Top of vertical bar	2 inches (50 mm)
	Bottom of vertical bar	3 inches, or 3½ inches (75 mm, or 90 mm) if overall height of culvert barrel is not to a full inch (25 mm)

In culvert barrel plans, uniform symbols make reinforcing bar groups easier for the contractor, fabricator, and detailer to identify. Therefore, use the symbols given in Table 8.2.4.4.4-2.

Table 8.2.4.4.4-2. Reinforcing bar group symbols

Location	Symbol
Slab transverse	k
Slab longitudinal	e
Wall vertical	a
Wall horizontal	b
Floor transverse	m
Floor longitudinal	f

Except for large culverts and deep fills the designer shall limit the maximum bar size to #9 (#29). The minimum spacing for non-alternating bars shall be 6 inches (150 mm). For alternating bars there should be no more than a three-bar-size change between adjacent bars, and for alternating bars with cutoffs not exceeding 50% there should be no more than a one-bar-size change between adjacent bars.

The minimum area of reinforcing in each exposed face of slab, walls, and floor shall meet the AASHTO requirements for shrinkage and temperature [AASHTO-LRFD 5.10.8]. Minimum bar size shall be #4 (#13). Spacing shall not exceed three times the slab, wall, or effective floor thickness, 18 inches (450 mm), or 12 inches (300 mm) for any component more than 18 inches (450 mm) thick.

The minimum area of reinforcement designed for flexure shall meet the AASHTO LRFD Specifications [AASHTO-LRFD 5.7.3.3.2]. Reinforcement designed for flexure also shall be spaced no farther apart than 1.5 times the slab, wall, or effective floor thickness, 18 inches (450 mm) [AASHTO-LRFD 5.10.3.2], or 12 inches (300 mm) for any component more than 18 inches (450 mm) thick.

In slabs, walls, and floors, parallel reinforcement designed for flexure shall be spaced no closer than 6 inches (150 mm) for non-alternating bars or 4.5 inches (115 mm) for alternating bars. In typical cases these minimums are larger than required by the AASHTO guidelines [AASHTO-LRFD 5.10.3.1.1].

For radial placement the reinforcement spacing may be a minimum of 3 inches (75 mm). More information for radial placement is given in the article for transverse reinforcement [BDM 8.2.4.5.4.2].

When the height of fill above the top slab is 2 feet (600 mm) or less, the designer shall provide distribution steel in the bottom of the top slab according to the AASHTO guidelines [AASHTO-LRFD 9.7.3.2]. Maximum spacing of the reinforcement shall not exceed 18 inches (450 mm).

8.2.4.5 Barrels

8.2.4.5.1 Roadway on slab

For reinforced concrete box culverts with no fill, the slab is essentially a bridge deck and requires special detailing as described below.

- The top slab surface shall be finished with macro texture parallel with the centerline of roadway except within 2 feet (600 mm) of the parapet [Iowa DOT SS 2301.03, H, 3]. Use CADD Note E624/M624 [BDM 11.7.2].
- The approach slab shall be tied to the culvert with #5 (#16), Grade 60, Type 316 LN stainless steel deformed bar dowels at 2 feet (600 mm) on center as shown in Figure 8.2.4.5.1. Cost for the dowels is to be incidental to the price for bid item “Reinforcing steel – epoxy coated”. Use CADD Note E634/M634 [BDM 11.7.2].
- The joint between the culvert and approach slab shall be an ‘E’ joint [OD SRP PV-101].
- Depending on construction scheduling it may be necessary for the contractor to protect the edge of the top slab at the approach pavement. In order to require the necessary protection use CADD Note E625/M625 [BDM 11.7.2].
- Provide 2.5 inches (65 mm) cover over the top slab reinforcement by increasing the thickness of the top slab by 0.5 inch (13 mm).
- All reinforcement in the slab and corbel and all wall reinforcement extending into the slab shall be epoxy coated. Vertical wall reinforcement needs to be spliced to allow for variable thickness of the slab. Provide Class C lap lengths for the epoxy coated vertical bars as given in Table 8.2.4.5.1.

Table 8.2.4.5.1. Minimum lap for vertical epoxy coated bars

Bar size (metric)	Class C Lap length, feet-inches (mm)
#4 (#13)	2'-7 (780)
#5 (#16)	3'-3 (975)
#6 (#19)	3'-10 (1170)
#7 (#22)	5'-2 (1460)
#8 (#25)	6'-10 (1920)
#9 (#29)	8'-8 (2430)

Table note:

Lap length is based on a Class C splice with material strengths of f'_c = 4 ksi (28 MPa) and f_y = 60 ksi (420 MPa), an epoxy bar condition, and center-to-center bar spacing of less than 6 inches (150 mm) and/or clear cover of less than 3 inches (75 mm) measured in the direction of the spacing. Lap lengths were determined using multiplied factors of 1.7 and 1.5 that result in an overall factor of 2.55. Higher material strengths may require longer lap lengths.

- Spacing of the #4 (#13) bent corbel reinforcement shall be the same as the spacing of the vertical wall reinforcement so that it can be tied efficiently. Maximum spacing shall be 15 inches (380 mm).
- Add the approach pavement joint detail in Figure 8.2.4.5.1 to the plans.

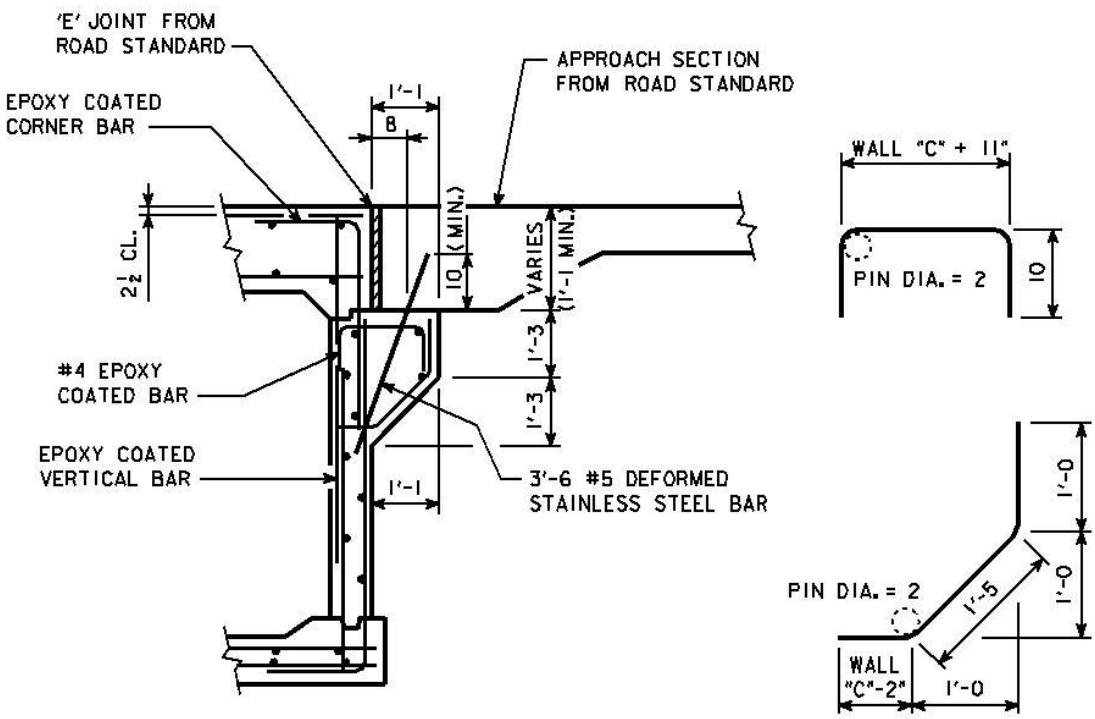

Figure 8.2.4.5.1. Approach pavement joint detail

8.2.4.5.2 Construction joints

8.2.4.5.2.1 Transverse

Whenever possible, construction joints for intermediate culvert barrel sections should be placed at equal intervals and should be a maximum of 38 feet (11.480 m) apart. Because the current single, twin, and triple barrel culvert standard plans are detailed on a repeating 3-foot module it is preferable that the intermediate barrel sections be of a compatible length such as 38 feet, 35 feet, 32 feet, etc. Metric culvert lengths should be specified to the nearest 100 mm.

When the fill height above the culvert is 5 feet (1.520 m) or less, if at all possible, locate culvert joints outside of the pavement boundaries. Uneven settlement of single barrel joints can cause damage in the pavement above. The location of barrel joints is more critical for multiple barrels because wide culverts tend to settle more unevenly than narrow culverts. Fill heights of 6 feet (1.830 m) and more provide better distribution of pavement loads, thereby decreasing uneven settlement and pavement damage.

If a culvert joint must be inside the pavement boundaries, do not place the joint at the centerline of roadway. With the off-center joint, if the pavement were damaged by culvert settlement, one lane could be kept open during repairs.

End barrel sections next to the headwalls should have a minimum length of 10 feet (3.000 m). This minimum length helps with the distribution of settlement and secures the end section in the earth slope. The summation of the lengths of the frost troughs for the headwall and end barrel section should be a maximum of 38 feet (11.480 m). This maximum length is based on the length of the frost trough formwork available to most contractors.

When working with larger skewed culverts, it may not be possible to keep the length of the end barrel sections within the limits specified above. In this case it is desirable to keep the short wall, measured along inside face, a minimum of 5 feet (1.500 m) long from back of parapet to construction joint.

8.2.4.5.2.2 Longitudinal

The standard detail at the top of each culvert wall is a permissible construction joint, with the option of lowering the joint with the engineer's approval.

For situations where water flow may make the construction of a large multiple box culvert difficult, provide a permissible longitudinal construction joint so that the floor can be constructed in two stages, as shown in Figure 8.2.4.5.2.2. Guidelines for locating the joint are as follows.

- Place the construction joint outside the short m7 bars.
- Place the construction joint between the longitudinal bars.

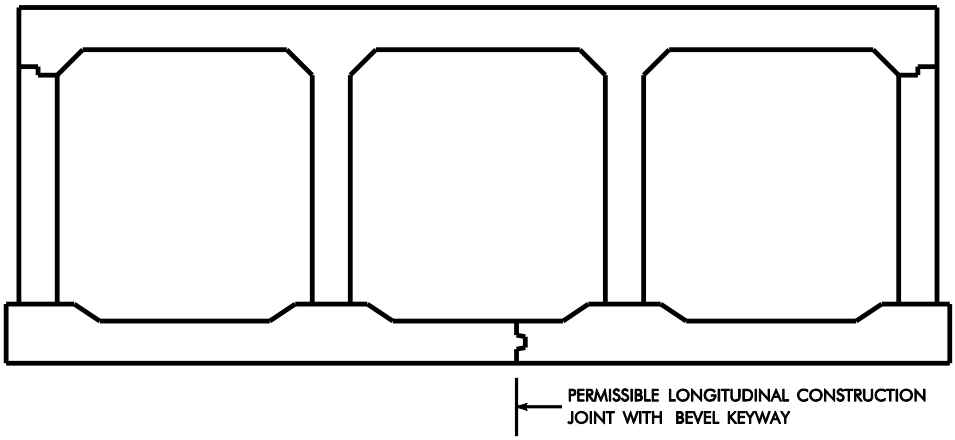

Figure 8.2.4.5.2.2. Permissible Longitudinal Construction Joint

8.2.4.5.3 Bell joints

In cases where large culvert settlements or other significant soil movements may occur, ordinary box culvert joints can open and cause erosion and related distress. A design feature to prevent such problems is a bell joint. The designer shall provide culvert barrel bell joints wherever any of the following conditions occur.

- The Soils Design Section anticipates settlement of 6 inches (150 mm) or greater. If such large settlements occur in the area where the culvert is constructed, the culvert construction joints tend to open up in the floor and walls. This allows the fill to erode through the open joints and cause increased settlement.
- Design fill heights are 35 feet (10.500 m) or more. If embankments with such large fill heights are built on incompressible soil or bedrock, settlement may not be a problem, but some subsidence may occur within the fill itself. This subsidence will cause longitudinal forces to develop and pull the barrel construction joints apart.
- When estimated settlements are not available from the Soils Design Section, the designer should use bell joints for single barrel culverts with 25 feet (7.600 m) or more of fill and for multiple barrel culverts with 15 feet (4.500 m) or more of fill.
- In cases where extensions are being added to an existing box culvert with bell joints, the designer should strongly consider providing bell joints on the extensions as well. Additional information and details for the extension are given in the bell joints article for extensions [BDM 8.2.4.9.3].

If the need for bell joints is uncertain, it is best to use them to ensure against possible culvert joint deterioration.

If bell joints are locked into bedrock they will not rotate and function as designed. Therefore, if bedrock is present in the streambed, the designer should adjust the flowline elevation so that the entire bell joint is above the surface of the rock, or the designer should require the rock to be excavated and backfilled with suitable material. Generally bell joints would not be used in this situation. The designer shall verify any decision with the Soils Design Section.

With culvert settlement, a bell joint will open, thus reducing bearing length within the joint. As a rule of thumb, the designer should provide a minimum bearing length of 9 inches (225 mm). This minimum will allow a maximum opening of 1 inch (25 mm) for a standard 10-inch bell joint [OBS SS CBJ 1-12] 3 inches (75 mm) for a standard 12-inch (300 mm) bell joint [OBS SS CBJ 2-12, TWCBJ 1-12] and 6 inches (150 mm) for a standard 15-inch (375 mm) bell joint [OBS SS CBJ 3-12, TWCBJ 2-12, TRCBJ 1-12, TRCBJ 2-12], as shown in Figure 8.2.4.5.3-1.

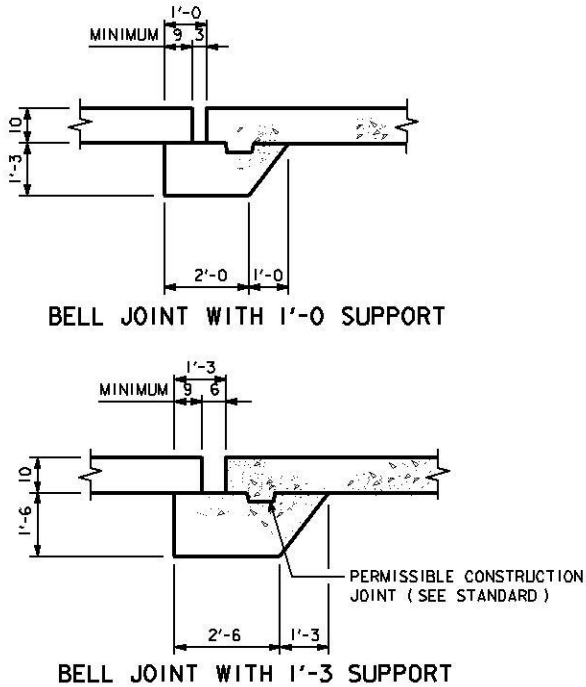

Figure 8.2.4.5.3-1. Allowable bell joint openings with standard details

The designer shall consult with the Assistant Bridge Engineer if bearing at a bell joint will be less than 9 inches (225 mm). It may be necessary also to consult with the Soils Design Section regarding alternatives such as over-excavation, geopiers, or non-standard bell joints.

Longitudinal reinforcing is not permitted through bell joints. The "m1" and “m9” floor bars, in the area of the bell joints, must be shortened on the design plan or by field cutting to prevent them from locking up the bell joint.

The designer should include a detail similar to Figure 8.2.4.5.3-2 in the plans showing the correct orientation of the bell joint with flow and the permissible construction joint to simplify construction [OBS SS CBJ 4-12]. For reference and use on typical reinforced concrete box culvert projects, bell joint details are provided in standard plans [OBS SS CBJ 1-12 to CBJ 3-12].

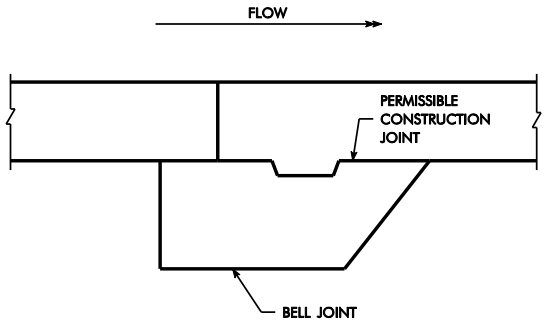

Figure 8.2.4.5.3-2. Typical barrel bell joint with flow orientation

If the top slab, wall, or floor thickness for a specific project changes from the bell joint standard sheets [OBS SS CBJ 1-12 to CBJ 3-12], the designer shall modify the standard. The changes shall reflect the new slab, wall, and floor thicknesses and new concrete quantities. The modified bill of reinforcing steel should reflect the corrected bar lengths and weight (mass), and the bent bar details should be corrected. All information for other culvert sizes should be deleted from the sheet. The designer should replace the standard sheet title block with the one used for the design and should include this modified bell joint sheet as a design sheet in the plans.

When the culvert is designed for varying fill heights, the bell joint details must address the change in floor and slab thickness, but the designer shall not reduce the thickness of the designed culvert section. Figure 5.2.4.5.3-3 shows details for changes in thickness in barrel walls.

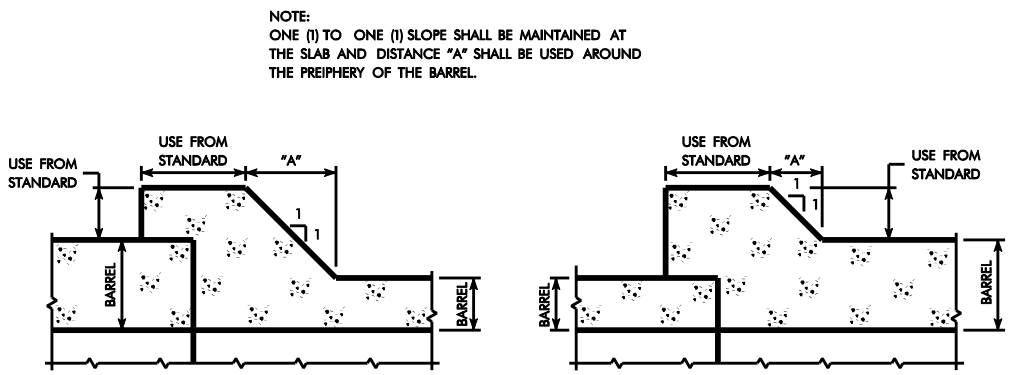

Figure 8.2.4.5.3-3. Barrel bell joint details for change in floor, wall, and slab thickness from thick to thin and from thin to thick

When both the width and height of reinforcing bars in the transverse direction exceed 6 feet (1.830 m) the bent bars will be difficult to ship. Therefore, in those cases, the designer shall provide U-bars and straight bars with laps as shown in Figure 8.2.4.8.1-3 and as sized in Table 8.2.4.8.1 [OBS SS CBJ 1-12 to OBS SS CBJ 3-12].

8.2.4.5.4 Horizontally curved alignments

8.2.4.5.4.1 Layout

For ease of cast-in-place construction on curved alignments, culvert contractors prefer straight segments. The AASHTO publication, *Highway Drainage Guidelines* [BDM 8.1.5.2], notes that bends up to 15 degrees do not affect flow significantly and thus are acceptable when needed. For these reasons the office designs horizontally curved culverts as straight segments with a maximum centerline barrel section length of 38 feet (11.480 m) and with maximum bends of 15 degrees, unless permission is granted for sharper bends.

The following are additional guidelines:

- All bent sections shall have equal lengths between bends. Also, to make detailing and construction easier, the office prefers that the distance between the bend locations and the joint locations be symmetrical for each barrel section as shown in Figure 8.2.4.5.4.1.
- A bend shall be 5, 10, or 15 degrees. Bends greater than 15 degrees are allowed only when approved by the Preliminary Bridge Engineer.
- For barrel spans of 6 feet (1.800 m) or less, the shortest barrel wall shall have a minimum length of 3 feet (900 mm) from the bend, as shown in Figure 8.2.4.5.4.3-1. The minimum length should be increased slightly so that the barrel length at the centerline of the culvert is dimensioned to the nearest whole inch (10 mm) in foot-inch format.
- For barrel spans of 8 feet (2.400 m) or more, the shortest barrel wall shall have a minimum length of 5 feet (1.500 m) from the bend, as shown in Figures 8.2.4.5.4.3-2, 8.2.4.5.4.4-1, and

8.2.4.5.4.4-2. The minimum length should be increased so that the barrel length at the centerline of the culvert is dimensioned to the nearest whole foot (100 mm) in foot-inch format.

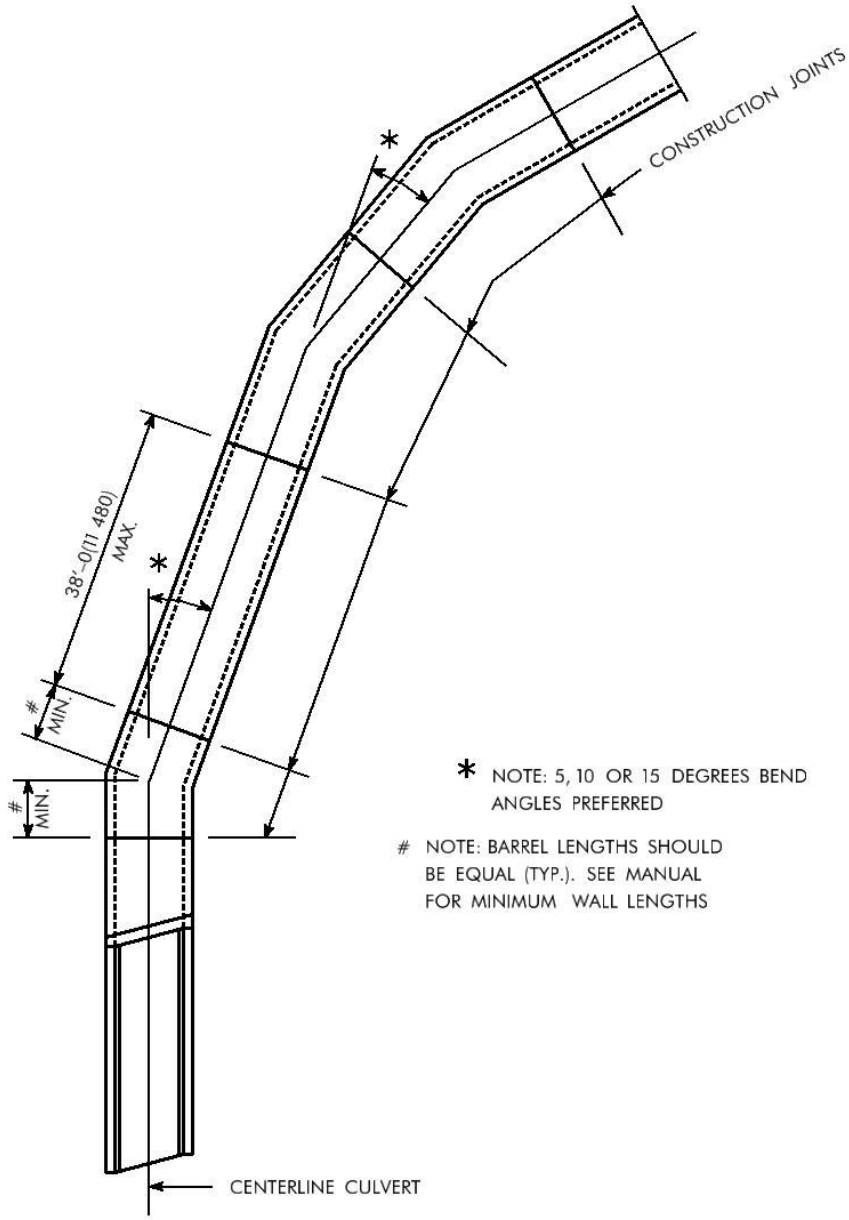

Figure note:

- Bends greater than 15 degrees require the approval of the Preliminary Bridge Engineer.

Figure 8.2.4.5.4.1. Example layout for a straight segment culvert on a horizontally curved alignment

8.2.4.5.4.2 Transverse reinforcement

The office has the following guidelines for detailing transverse reinforcement at culvert bends.

- Maintain normal transverse reinforcing steel patterns to the front face of the shortest barrel wall for each barrel. Add flared bars to maintain design spacing at the wall joints and mid-span of the barrel.
- Whenever possible, keep the bar spacing and length pattern through the bend. Bar spacing should be a minimum of 3 inches (75 mm) center-to-center and a maximum of one-and-one-half times the design bar spacing.
- When the pattern cannot be maintained through the bend, drop the pattern and make the bar lengths as long as possible following the guidelines for minimum and maximum spacing given above.
- For ease of construction, keep the number of bars to a minimum and the reinforcing layout as simple as possible. Draw different bar arrangements to determine the best layout.
- Check to ensure that at maximum bending moment locations, such as midspan for positive bending and above interior wall for negative bending, the spacing of the reinforcing steel does not exceed the spacing required for strength.

The transverse reinforcing layouts for twin barrel culverts in Figures 8.2.4.5.4.2-1 through 8.2.4.5.4.2-4 were developed to minimize the number of variable bars and should be used in detailing the slabs and floors of single and multiple bent barrel sections.

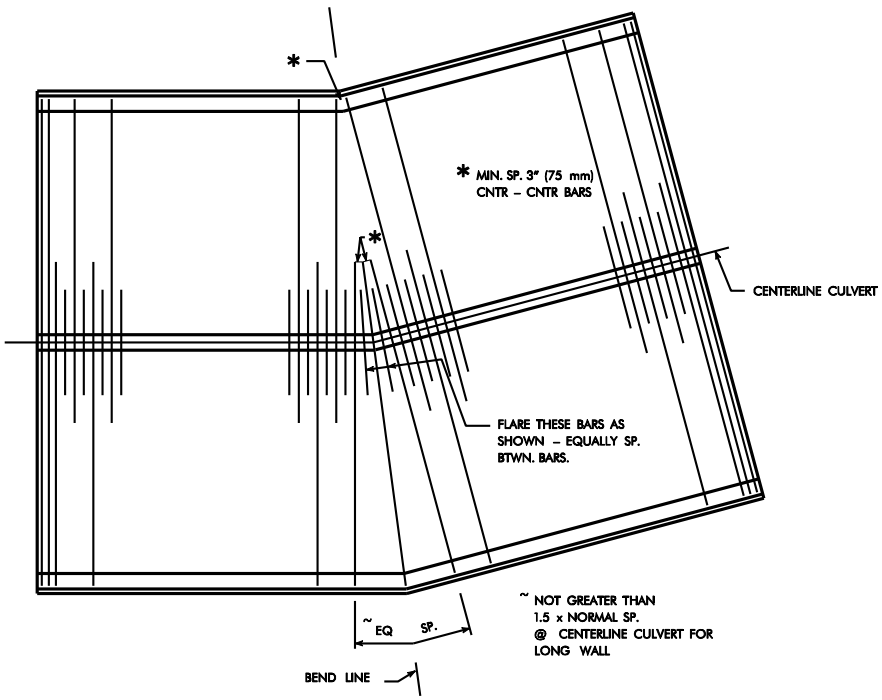

Figure 8.2.4.5.4.2-1. Transverse reinforcing layout for top of slab

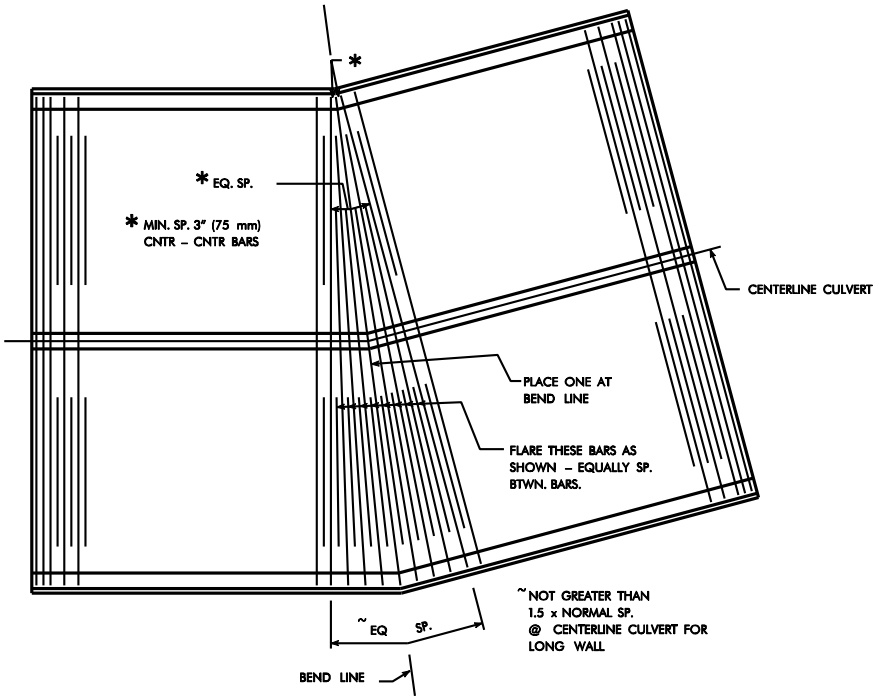

Figure 8.2.4.5.4.2-2. Transverse reinforcing layout for bottom of slab

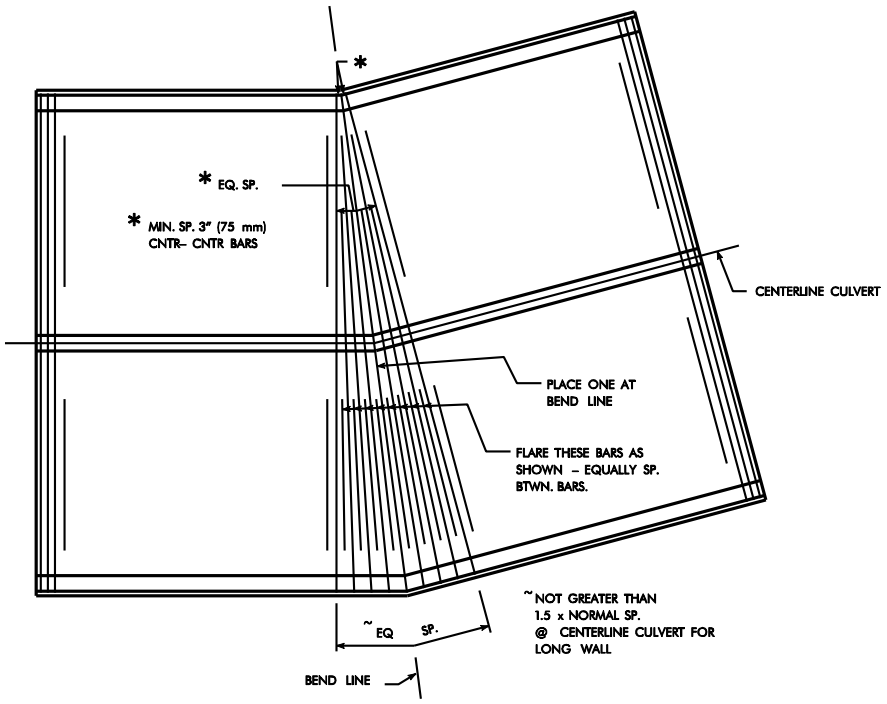

Figure 8.2.4.5.4.2-3. Transverse reinforcing layout for top of floor

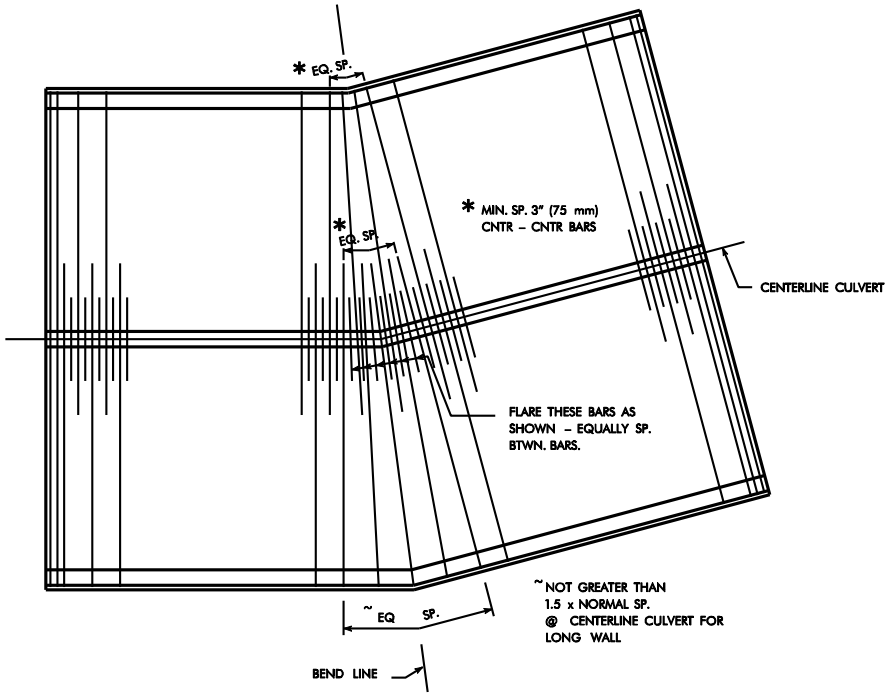

Figure 8.2.4.5.4.2-4. Transverse reinforcing layout for bottom of floor

8.2.4.5.4.3 Longitudinal reinforcement for single barrels

When detailing longitudinal bars for single barrel bends, follow the bar bend layouts shown in Figures 8.2.4.5.4.3-1 and 8.2.4.5.4.3-2. See also the guidelines for multiple barrels [BDM 8.2.4.5.4.4].

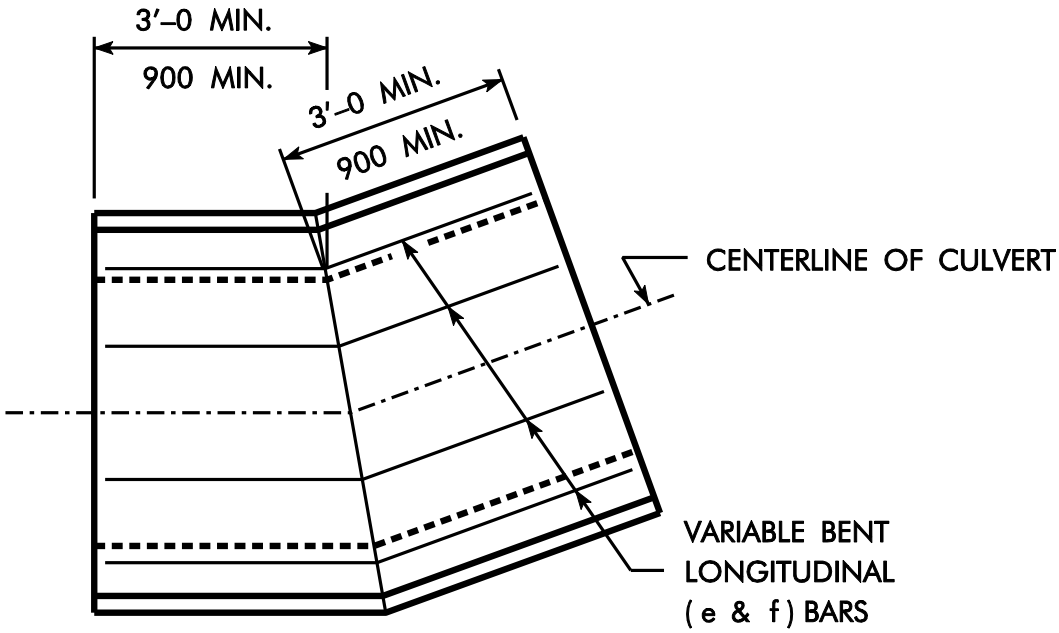

Figure 8.2.4.5.4.3-1. Longitudinal bar bends for 4-foot (1.200-m) to 6-foot (1.800-m) spans

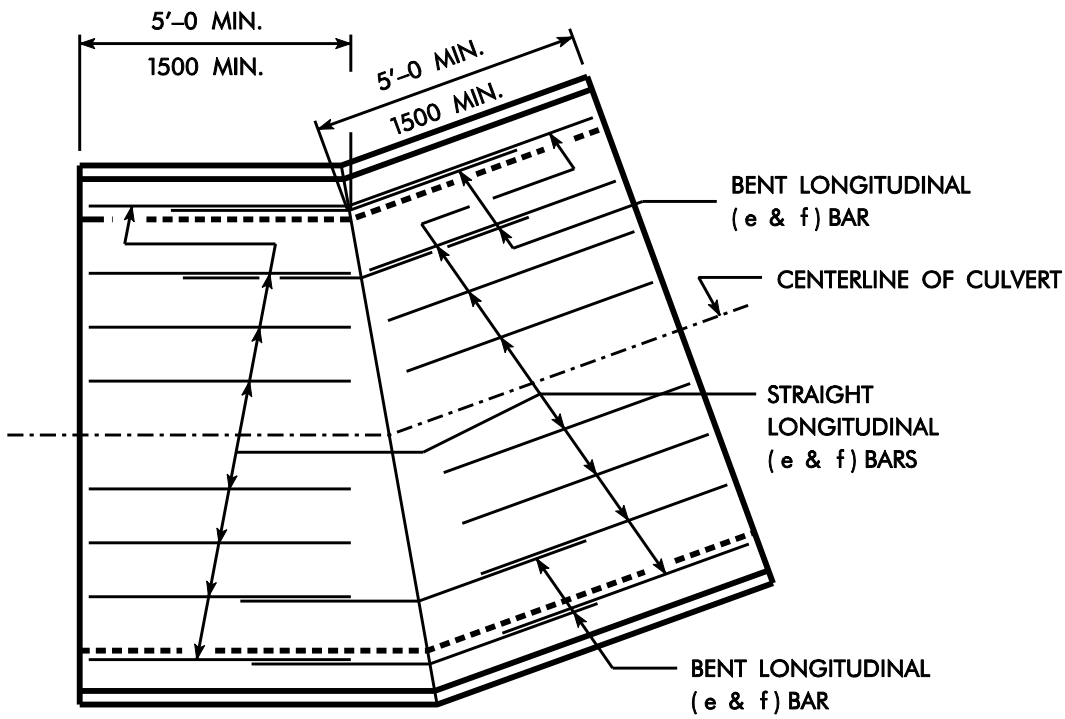

Figure 8.2.4.5.4.3-2. Longitudinal bar bends for 8-foot (2.400-m) to 12-foot (3.600-m) spans

8.2.4.5.4.4 Longitudinal reinforcement for multiple barrels

Longitudinal wall reinforcement for multiple barrel culverts is detailed differently from longitudinal slab and floor reinforcement. The barrel wall horizontal (b) bars are to be made up of single bent bars and are not to be spliced with bent bars. For the bars placed in each face, the bar lengths are determined using the centerline wall length. The horizontal bars in each wall will have a different length and bar designation.

For culvert barrel spans of 6 feet (1.800 m) or less the longitudinal (e & f) bars in the slab and floor should be bent and of variable length.

For culvert barrel spans of 8 feet (2.400 m) or more the longitudinal (e & f) bars in the slab and floor should be straight bars of constant length for each barrel and bent bars with variable lap lengths as shown in Figures 8.2.4.5.4.4-1 and 8.2.4.5.4.4-2. The following are additional guidelines:

- The length for the straight longitudinal (e & f) bars in the slab and floor should allow 2 inches (50 mm) clear at the barrel joint end and extend to where the front face of the short barrel wall bends.
- The bent longitudinal (e & f) bars in the slab and floor are to lap the straight longitudinal bars with the lap shown for Other Bars in Table 8.2.4.5.4.4. If the concrete thickness below the bar exceeds 12 inches (300 mm), use the Top Bar lap from the table. There will be one bent bar length for each of the bar sets: top slab, bottom slab, top floor, and bottom floor reinforcement. (This also will be the case for single barrel culverts.)
- The straight longitudinal bars will change length in each barrel as shown in Figures 8.2.4.5.4.4-1 and 8.2.4.5.4.4-2. The bent longitudinal bars will remain one length for all barrels.

Table 8.2.4.5.4.4. Minimum longitudinal (e & f) bar laps

Bar size	Top Bar Lap [(1), (2)] Feet-inches (mm)	Other Bar Lap [(1), (3)] Feet-inches (mm)
#4 (#13)	1'-6 (445)	1'-1 (320)
#5 (#16)	1'-10 (555)	1'-4 (400)
#6 (#19)	2'-3 (670)	1'-7 (480)

Table notes:

(1) Lap length is based on a Class B splice with material strengths of f'_c = 4 ksi (28 MPa) and f_y = 60 ksi (420 MPa), a black bar condition, center-to-center bar spacing of at least 6 inches (150 mm), and clear cover of at least 3 inches (75 mm) measured in the direction of the spacing. Higher material strengths, epoxy coating, smaller spacing, or less clear cover will require longer lap lengths.

(2) These were determined using multiplied modification factors of 1.4, 1.3, and 0.8 that result in an overall factor of 1.456.

(3) These were determined using multiplied modification factors of 1.3 and 0.8 that result in an overall factor of 1.04.

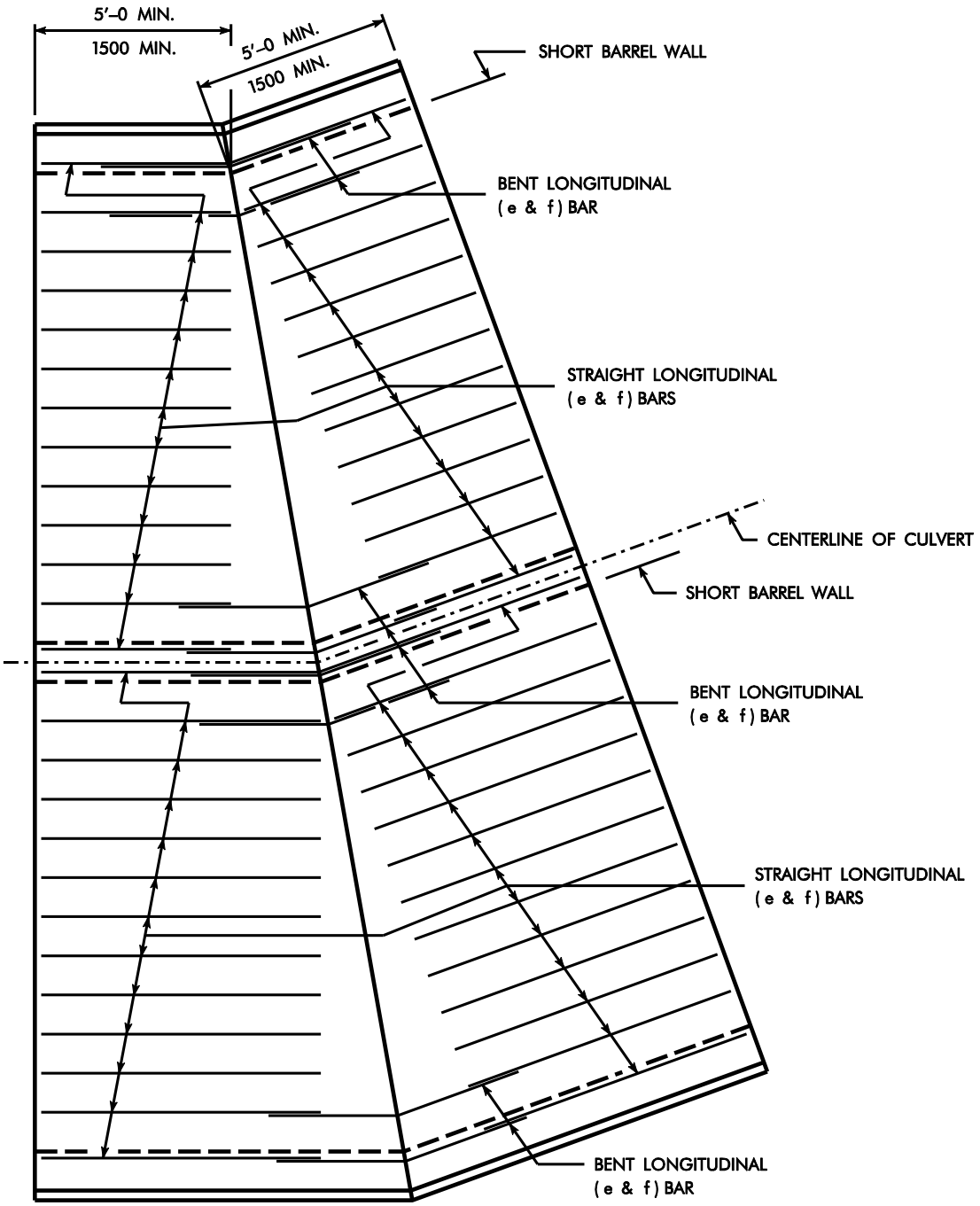

Figure 8.2.4.5.4.4-1. Longitudinal bar bends for 12-foot (3.600-m) span twin culvert

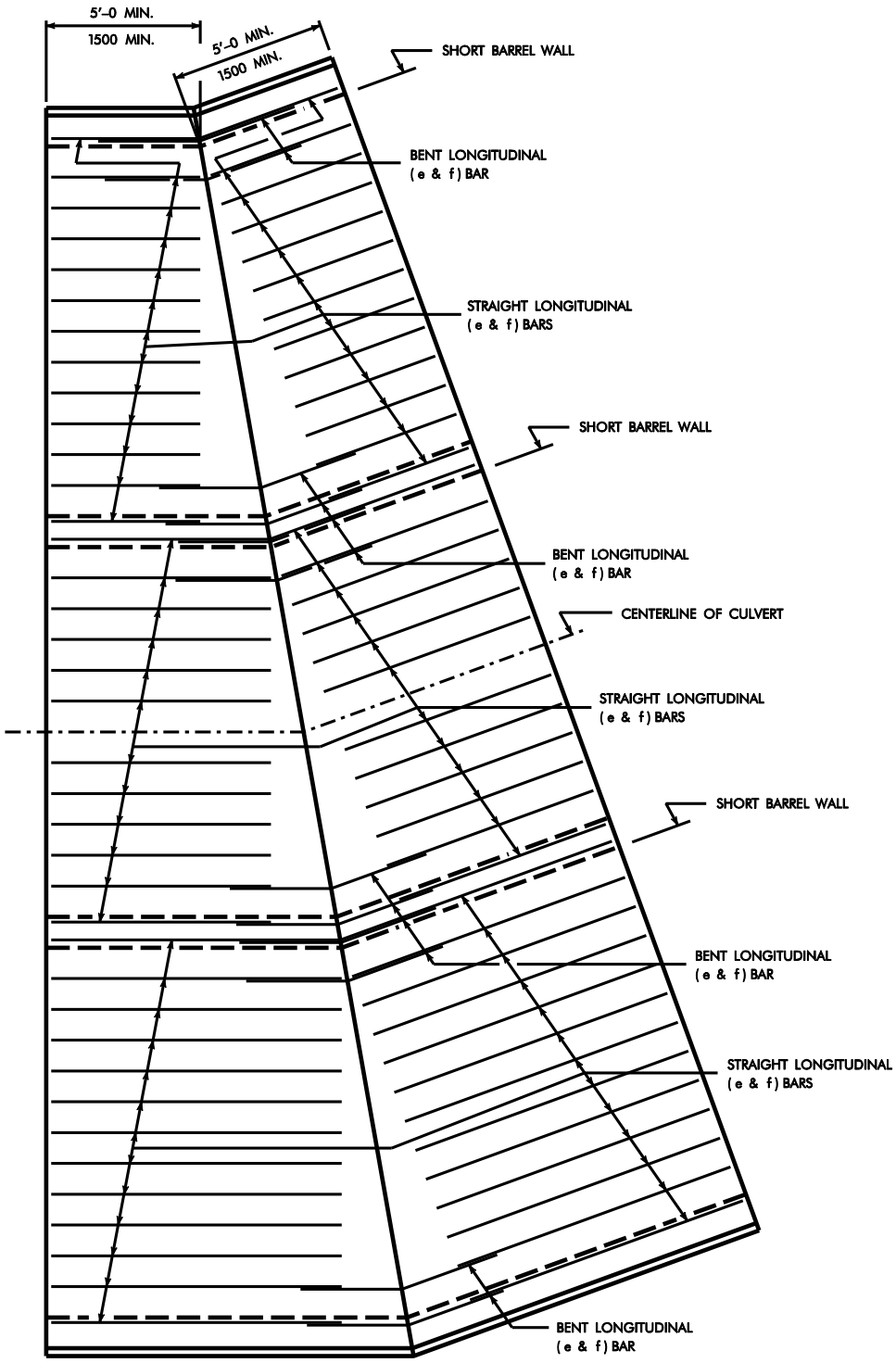

Figure 8.2.4.5.4.4-2. Longitudinal bar bends for 12-foot (3.600-m) span triple culvert

8.2.4.5.5 Wall penetrations

8.2.4.5.5.1 Pipes

As needed, the preliminary designer will designate locations where openings for reinforced concrete pipes (RCPs) are to be provided in the reinforced concrete box culvert walls or top slab. Office policy is for the pipe sections to be cast in the wall or slab during the box culvert construction.

For pipes in walls, give the flow line elevation of the proposed pipe, and reference its location with respect to the back face of the parapet. For pipes in the slab, reference the location with respect to the back face of the parapet and the centerline of the culvert. The end of the pipe shall extend a minimum of 6 inches (150 mm) past the inside face of the culvert wall. The maximum length of pipe to be cast into the wall should be 4 feet (1200 mm). See Figure 8.2.4.5.5.1 for a sample detail.

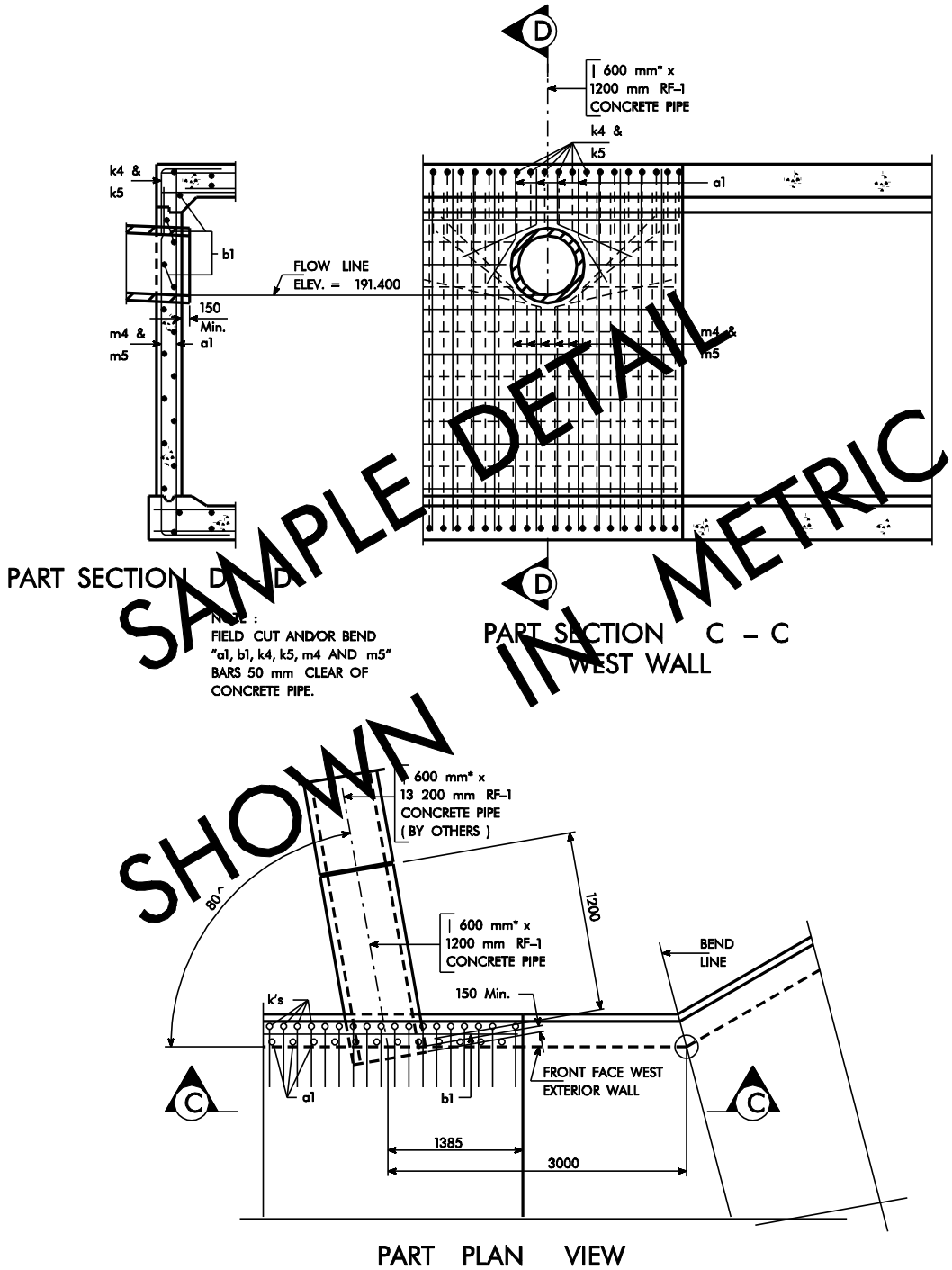

Figure notes:

- For pipes 48 inches (1220 mm) and larger, use reinforcing shown in Figure 8.4.4.8.1.
- Place a note on the plans similar to CADD note E633 or M633 [BDM 11.7.2].

Figure 8.2.4.5.5.1. Sample detail for a concrete pipe through a culvert wall

The portion of the pipe that is cast into the culvert wall or slab shall be incidental to the cost of structural concrete. The item reference list should include the size and length of the pipe.

8.2.4.5.5.2 Weep holes

In cases such as a nearby natural spring, high water table, or use of a drainage blanket where it is advisable to reduce hydraulic pressure on a reinforced concrete box culvert, the Soils Design Section or preliminary designer will recommend that weep holes be placed in exterior walls. The 4-inch (100-mm) diameter~~round or square~~ weep holes normally are placed in pairs, with the bottom hole one foot (300 mm) above the flow line. The top hole is placed one foot (300 mm) above the bottom hole and offset one foot (300 mm), as shown in Figure 8.2.4.5.5.2-1.

Each hole is covered with a rodent screen consisting of a 24-inch square by 1/4 inch (600 mm square by 6 mm) galvanized hardware cloth centered on the weep hole. Normally the culvert contractor is required to place porous backfill over the weep holes, as shown in Figure 8.2.4.5.5.2-2, and also to furnish and place granular backfill material when completing the Class 20 excavation.

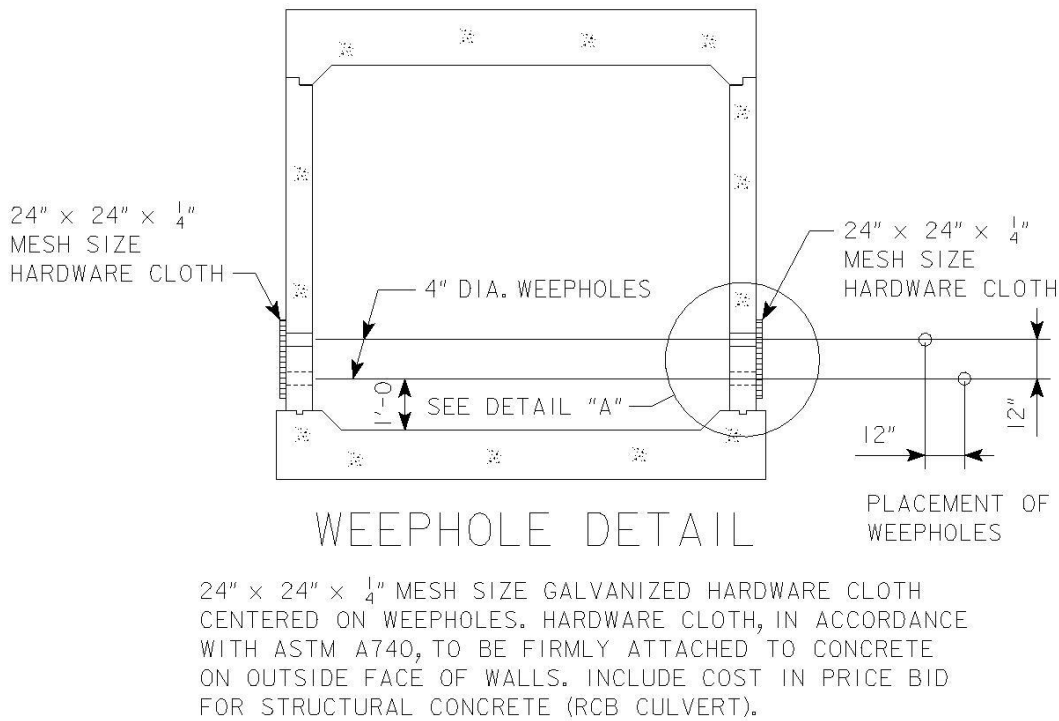

Figure 8.2.4.5.5.2-1. Exterior~~Side~~ wall weep hole detail

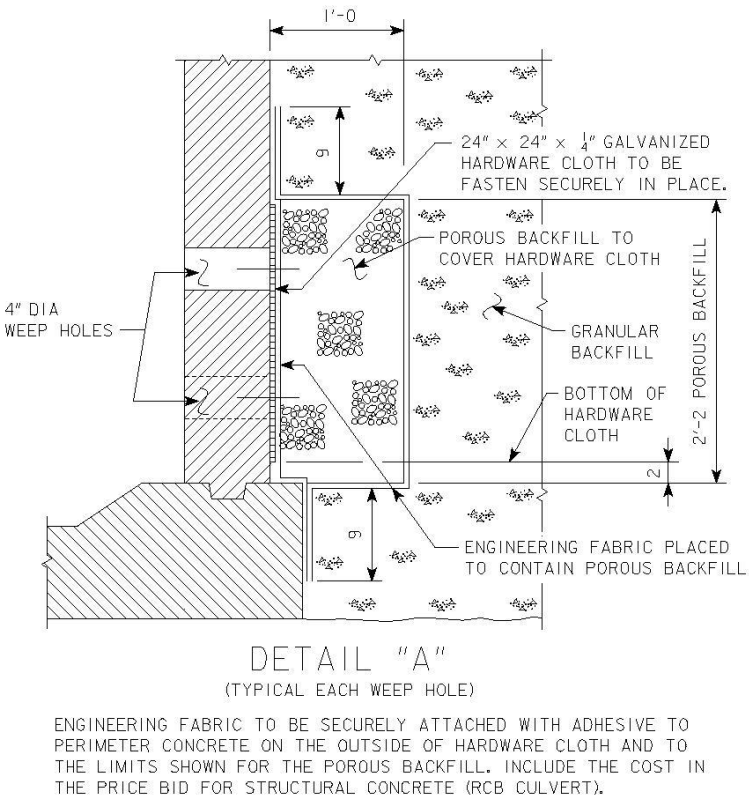

Figure 8.2.4.5.5.2-2. Typical individual weep hole detail

8.2.4.5.6 Settlement and camber

Reinforced concrete box culverts often are placed in embankments that will settle as new loads compress existing soil and/or embankment fill. The Soils Design Section will provide the culvert settlement estimates needed for final design.

If the anticipated settlement is zero, the designer should provide the note “Anticipated Settlement = Negligible” under the longitudinal section along the centerline of the culvert.

If the estimated settlement for a culvert is 6 inches (150 mm) or more, the designer shall camber the culvert and provide bell joints. Settlement is considered to be zero at the toes of the fill slopes and maximum at the roadway shoulder lines. Therefore, the camber should be set as zero at the inlet and outlet flow lines and as the maximum settlement at the shoulder lines, with linear interpolation between any set of two points. The designer should give the flow line elevation at each cambered bell joint and provide a note under the longitudinal section along the centerline of the culvert, “Anticipated Settlement = ___ feet” (or ___ mm”), for the maximum settlement.

8.2.4.6 Headwalls

If the wing thickness is different from the adjacent barrel wall the designer shall provide a tapered transition at least one foot (300 mm) but not more than three feet (900 mm) in length. Transition differences greater than 3 inches shall be at a relatively shallow slope of 1:4 or less. The transition should be in the thinner wall.

8.2.4.7 Inlets

8.2.4.7.1 Trash racks

As necessary for unusual site conditions, the preliminary designer will add a steel pile trash rack to the situation plan for a reinforced concrete box culvert. The trash rack is placed across the streambed upstream from the culvert and is intended to prevent large trees or other large debris from plugging the culvert inlet.

The length of the trash rack is governed by the size of the culvert and the width of the stream. A typical trash rack is made from HP 10 x 42 (HP 250 x 62) piles spaced about 10 feet (3.050 m) apart in a line across the stream. The piles normally are driven to a specified elevation, the tops are prepared by drilling or burning and reaming holes for bolts, and a pile section is then bolted horizontally to the upstream side of each driven pile with four galvanized 7/8 inch (22 mm) diameter high strength bolts, nuts, and washers.

Designers and detailers should check all available soil borings for the elevation of bedrock below the stream bed elevation. The piles must be driven deep enough in soil to develop lateral strength to resist the debris load.

For an example of a typical trash rack see the plans for Montgomery 285 on Iowa Highway 48.

8.2.4.7.2 Debris racks

When necessary, Preliminary Bridge Section will add a debris rack to the inlet end of a culvert. A debris rack is relatively lightweight and intended to prevent plugging of a culvert by ordinary trash and debris. The designer shall contact the Preliminary Bridge Section to discuss design criteria.

The Office of Materials recommends that debris racks be made with smooth ½-inch (13-mm) or 5/8-inch (16-mm) diameter steel bars meeting the requirements of commercial grade, low carbon steel, AASHTO M1020. The designer shall note on the plans that the racks are to be fabricated before galvanizing.

When detailing debris racks the designer should be aware of the size limitations of available galvanizing kettles. The table below gives usable medium and large kettle sizes for galvanizers in Iowa and adjacent states.

Table 8.2.4.7.2. Usable sizes of galvanizing kettles in Iowa and adjacent states[1]

General Kettle Size Category	Number of Kettles Available in 2009	Length, feet (m)	Width, feet (m)	Depth, feet (m)
Medium	2	29.00 (8.839)	5.50 (1.676)	4.00 (1.219)
Large	6	50.00 (15.240)	6.17 (1.880)	7.00 (2.134)

Table note:

(1) The usable sizes were determined from *GalvaSource*, a publication available from the American Galvanizers Association web site: http://www.galvanizeit.org/images/uploads/publicationPDFs/North_American_Galvanizers_Listing.pdf. The usable sizes are the least published sizes for the arbitrary categories in the table less clearances of 1.00 foot (300 mm) on length and depth and 0.50 foot (150 mm) on width.

For an example of a debris rack see the plans for Clayton 483 on US 18.

8.2.4.7.3 Safety grates

When a box culvert inlet or outlet will be in the clear zone and otherwise unprotected, Preliminary Bridge Section in consultation with the Office of Design will add a safety grate. A safety grate is heavier than a debris rack [BDM 8.2.4.7.2] and is intended to prevent serious injury to occupants of an errant vehicle traversing the end of a box culvert.

Safety grate design guidelines originally were developed by the Texas Transportation Institute [BDM 8.1.5.2] and then were included with minor modifications in AASHTO's Roadside Design Guide [BDM

8.1.5.2]. Recent testing of a grate that met the guidelines and NCHRP Report 350, TL-3 standards verified the grate's safety performance on roadside slopes as steep as 3:1 horizontal to vertical [BDM 8.1.5.2]. The Office of Design has developed standard safety grate designs for box culverts [OD SRP RF-29] that meet the Roadside Design Guide guidelines, and the designer should use the standard designs.

In unusual cases when a standard design is not appropriate, the designer shall provide a grate that meets the Roadside Design Guide standards and generally follows the Office of Design's standard details and notes. The grate members should be designed for yield under a traversing 1.8-kip (8.0-kN) load. The pipe members should be fabricated from ASTM A53, Grade B steel pipe [IDOT SS 4153.05]. It is important that the designer note on the plans that the members and brackets are to be fabricated before galvanizing.

8.2.4.7.4 End walls

When necessary to elevate the inlet for a multiple barrel reinforced concrete box culvert, the preliminary designer will add an end wall to the basic culvert headwall configuration. The end wall weir will set the elevation of the upstream flow, and therefore the end wall height shall be determined by the Preliminary Bridge Section.

Figures 8.2.4.7.4-1 and 8.2.4.7.4-2 show typical details for an end wall applied to a standard twin or triple box culvert. For end walls the designer should follow these guidelines:

- The additional quantities for the modification of the interior wall of the headwall are to be included with the end wall quantities.
- The interior wall reinforcing steel from the standard culvert plan is not to be modified. The displaced concrete area from the interior wall is to be subtracted from the end wall concrete quantity.
- The additional vertical hoops shall match bar size with the vertical "c" headwall bars. The additional horizontal bars shall match bar size with "s" bars from the standard flared wing headwall plan.

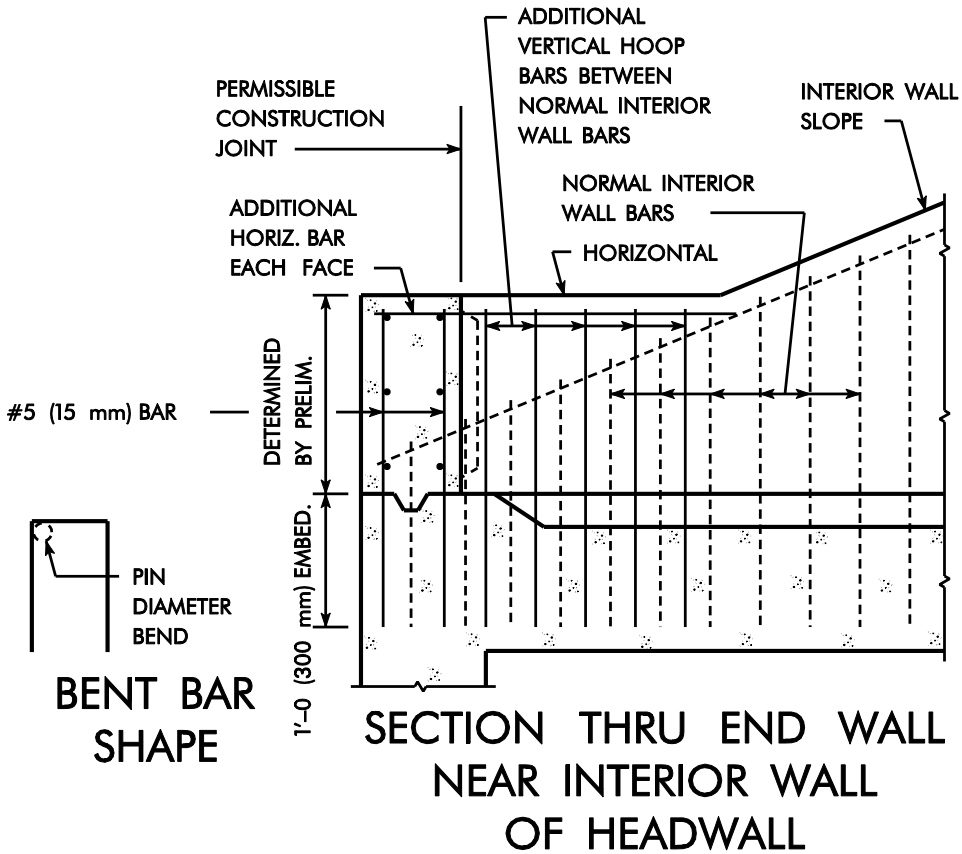

Figure 8.2.4.7.4-1. End wall details for a multiple box culvert

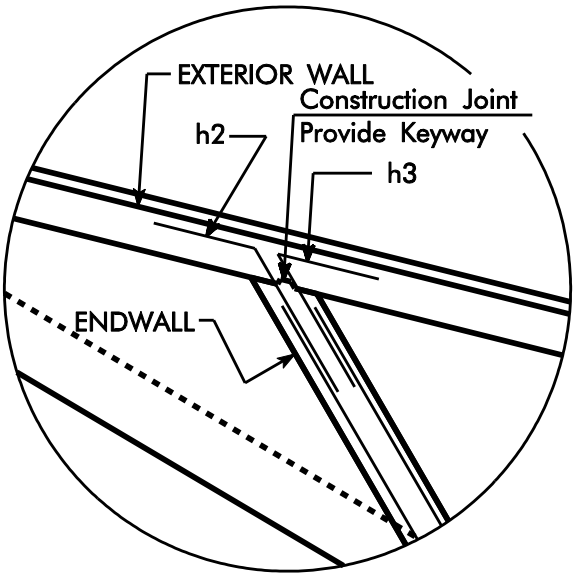

Figure note:

- Exterior wall bar leg is to be tied to exterior headwall steel.

Figure 8.2.4.7.4-2. Detail of end wall to exterior wall connection

8.2.4.7.5 Slope tapered inlets

A slope tapered inlet is intended to reduce construction costs by reducing the size of a culvert barrel and still provide acceptable hydraulic capacity and upstream headwater. The culvert site must have enough elevation difference for the overall culvert design to function properly. Usually the culvert outlet will have a flume and basin to dissipate energy.

Bell joints are placed between the slope tapered inlet and the culvert. For a reinforced concrete box culvert, the designer shall provide 1.50 feet (450 mm) of normal barrel length at the inlet-culvert joint to accommodate placement of the bell joint. See Figure 8.2.4.7.5 for sample slope tapered inlet details.

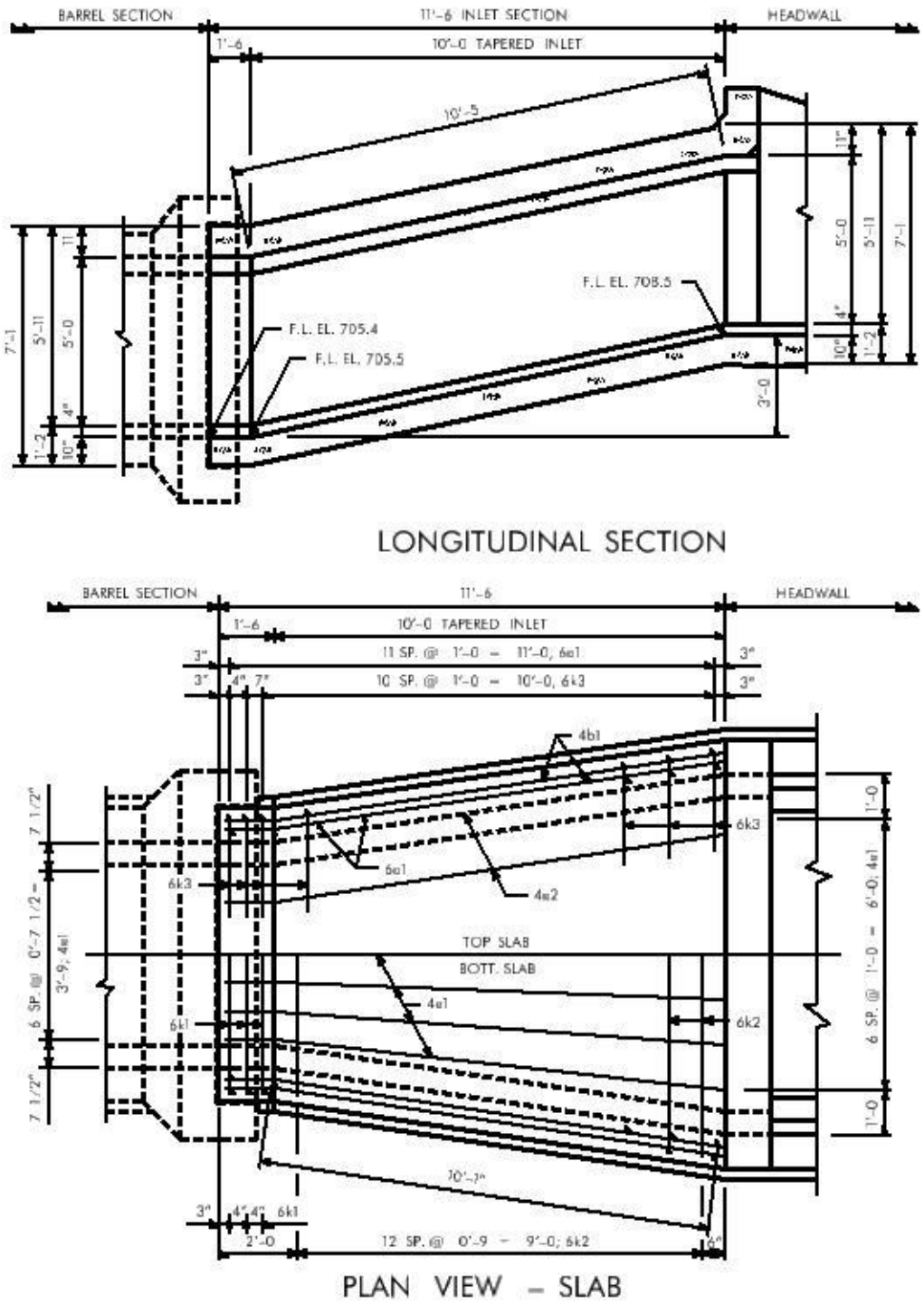

Figure 8.2.4.7.5. Sample reinforced concrete box culvert slope tapered inlet details

8.2.4.7.6 Drop inlets

Reserved.

8.2.4.8 Outlets

8.2.4.8.1 Flumes

For a site with considerable elevation difference the preliminary designer may add a flume to conduct water from the reinforced concrete box culvert outlet down to streambed elevation. Flume length and outlet elevation are dependent on the configuration of the site. The flume length will be determined by the preliminary designer and generally rounded to the nearest one foot (100 mm). Other, calculated flume dimensions determined by the final designer or detailer, however, should be given to the nearest 1/8 inch (5 mm).

The typical flume floor begins at its top with an L3 length that fits a parabolic curve and continues with a straight length to its bottom. Curve equations are given in Figure 8.2.4.8.1-1, and area equations are given in Figure 8.2.4.8.1-2. Standard flume dimensions for 3:1 and 4:1 horizontal to vertical slopes are given on a standard sheet with slightly different notation [OBS SS RCF-02-12].

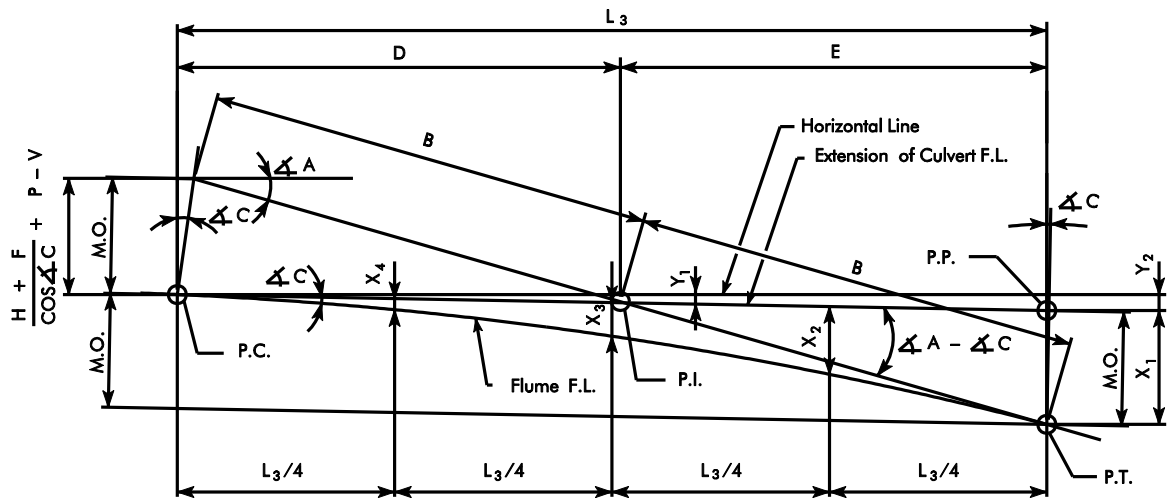

PARABOLIC CURVE

$$M.O. = \left[\frac{H + F}{\cos \measuredangle C} + P - V\right] \frac{\sin \measuredangle (90 \text{ deg} - A)}{\sin \measuredangle (90 \text{ deg} - C + A)}$$

$$B = \frac{M.O.}{\sin \measuredangle (A - C)}$$

$$E = B \cos \measuredangle A$$

$$D = \frac{M.O.}{\tan \measuredangle (A - C)} \cos \measuredangle C$$

$$L_3 = E + D$$

$$X_1 = M.O. \cos \measuredangle C$$

$$X_2 = 9/16\ X_1$$

$$X_3 = 1/4\ X_1$$

$$X_4 = 1/16\ X_1$$

$$Y_1 = \frac{M.O. \sin \measuredangle C}{\tan \measuredangle (A - C)}$$

$$Y_2 = L_3 \tan \measuredangle C$$

H = Height of RCB
P = Depth of Parapet
F = Depth of Frost Trough
V = M (1/COS∡A) (Vertical Height of Chute)
M = 3/4 H

Figure 8.2.4.8.1-1. Variables and equations for a parabolic flume curve

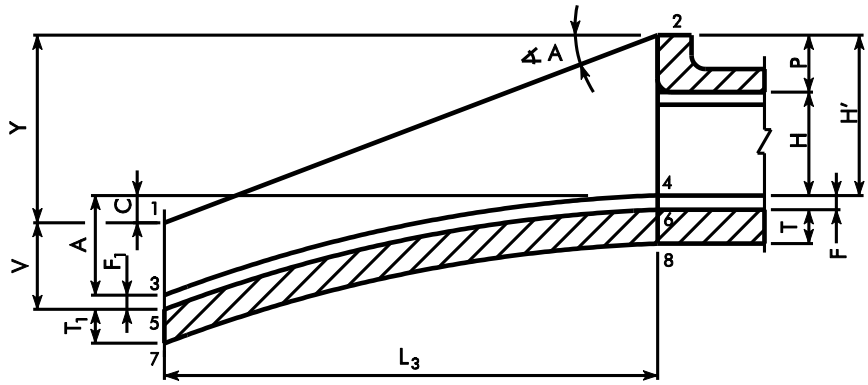

$T_1 = T\ (1 / \cos \measuredangle A)$	AREA 1 = 1-2-4-3, sidewall
$F_1 = F\ (1 / \cos \measuredangle A)$	AREA 2 = 3-4-6-5, floor above frost trough
$V = M\ (1 / \cos \measuredangle A)$	AREA 3 = 5-6-8-7, floor at frost trough
$Y = L_3\ (\tan \measuredangle A)$	AREA 1 = $L_3\ (H' + A/3 + Y/2)$
$C = Y - H'$	AREA 2 = $(L_3 / 3)\ (F_1 + 2F)$
$A = V + C - F_1$	AREA 3 = $(L_3 / 3)\ (T_1 + 2T)$
	AREA = SQ. FT. ONLY

Figure note:

- $L_3 > H'$
- See standard sheet for M dimension [OBS SS RCF-01-12]

Figure 8.2.4.8.1-2. Dimensions and estimated areas for the curved flume floor length

For typical projects the office prefers that the designer use standard flume chute detail sheets for heights of 3 to 12 feet (0.915 to 3.660 m) [OBS SS 1070-1079].

A flume usually is built on an embankment where settlement can be expected. Therefore, office practice is to place a bell joint at the junction of the culvert end barrel section and the flume [OBS SS FBJ-01-12 to FBJ-05-12]. For a flume over 40 feet (12.200 m) in length, the designer also shall provide a bell joint at the mid-point of the flume, located on the straight L_2 length below the L_3 curved length.

Typical flumes have a basin at the bottom, but stub flumes end with a cut-off wall at the bottom.

Bent U-bars placed transverse to a flume, for which the length of the bottom and vertical legs are both greater than 6 feet (1.800 m), are difficult to ship because of the limited width of a truck bed, 8 feet (2.440 m) or less. Therefore, if both the bottom and vertical legs of a bent bar would exceed 6 feet (1.800 m) in length, break the bar into three pieces and lap as shown in Figure 8.2.4.8.1-3.

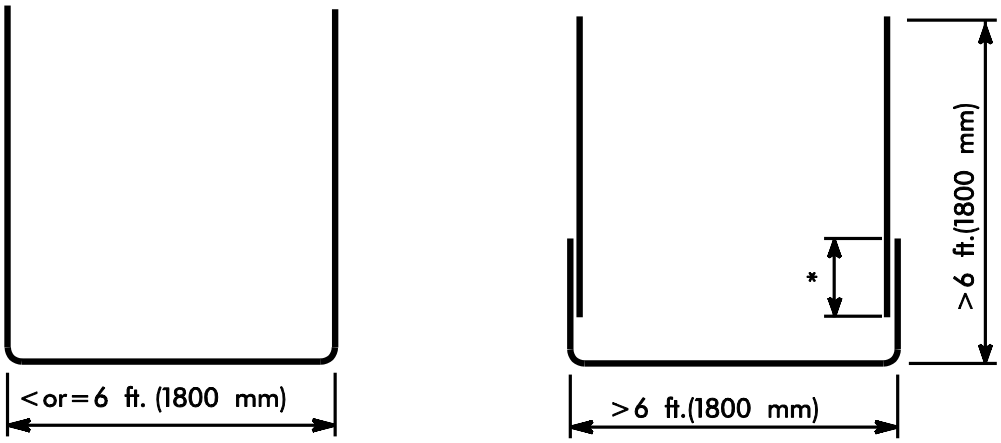

Figure note:

- See Table 8.2.4.8.1 for lap lengths

Figure 8.2.4.8.1-3. Length limits for transverse bent bars

Table 8.2.4.8.1. Lap lengths for transverse bent bars

Bar size	Minimum lap length (1), (2)
#5 (#16)	1'-9 (520 mm)
#6 (#19)	2'-1 (625 mm)
#7 (#22)	2'-7 (780 mm)
#8 (#25)	3'-5 (1.025 m)

Table note:

(1) Lap length is based on a Class C splice with material strengths of f'_c = 4 ksi (28 MPa) and f_y = 60 ksi (420 MPa), a black bar condition, center-to-center bar spacing of at least 6 inches (150 mm), and clear cover of at least 3 inches (75 mm) measured in the direction of the spacing. Higher material strengths, epoxy coating, smaller spacing, or less clear cover will require longer lap lengths.

(2) These lengths were determined using multiplied modification factors of 1.7 and 0.8 that result in an overall factor of 1.36.

8.2.4.8.2 Scour Floors

When appropriate for site conditions the preliminary designer will add a scour floor between the wing walls beyond the usual apron and curtain. See Figure 8.2.4.8.2 for an example.

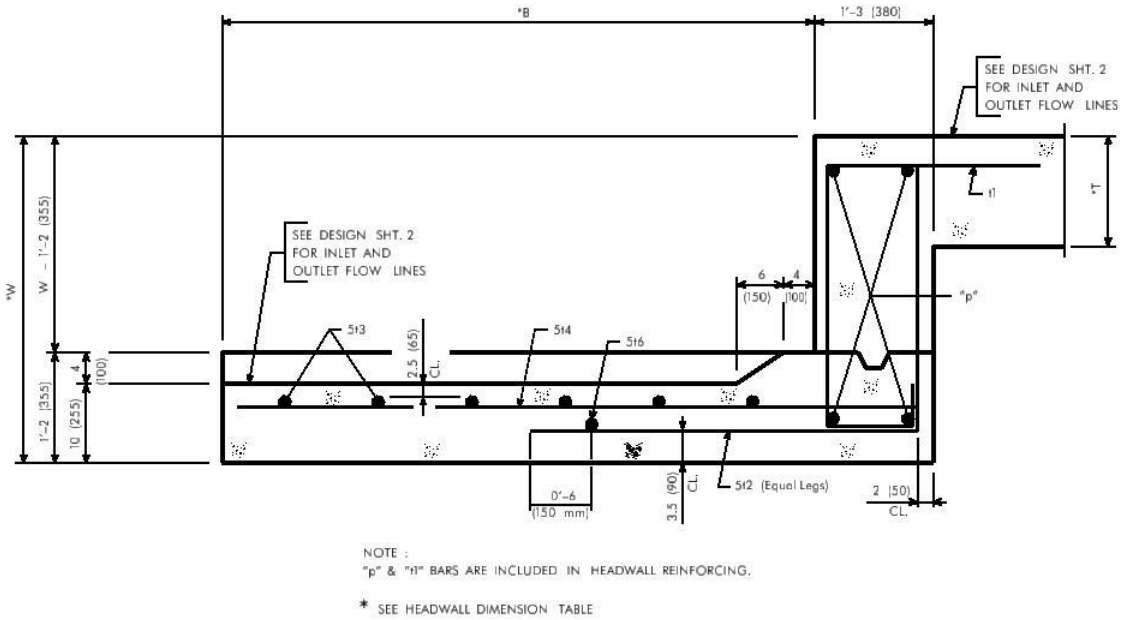

Figure note:

- The headwall dimension table and design sheet 2 would be in the plan set for the culvert and are not given in this manual.
- The scour floor is on the left.

Figure 8.2.4.8.2. Section through curtain wall and scour floor

8.2.4.8.3 Basins

Standard flume basin dimensions and reinforcement are given on standard sheets [OBS SS RCFB-01-12 to RCFB-07-12]. The lengths of the standard basins are based on a 4:1 horizontal to vertical slope, which is hydraulically sufficient based on a review by the Preliminary Bridge Section using methodology established by the Saint Anthony Falls stilling basin.

The preliminary designer normally will set the flume basin floor elevation approximately 5 feet (1500 mm) below the existing streambed. Thus the streambed typically will be one to three feet (300 to 900 mm) below the end of the flume. Detailers should check all available soil borings to be sure there is no bedrock at the elevation of the proposed basin.

8.2.4.9 Extensions

8.2.4.9.1 Connections

In order to initiate a clean break line, removals of culvert ends for culvert extensions require a 2.5-inch (65-mm) deep saw cut on the top slab, both sides of the walls, and top of the floor. Because these saw cuts will sever most reinforcing steel, the existing longitudinal reinforcing will not be incorporated into new work. Dowels, #5 x 2'-6 (#16 x 760 mm), with a minimum embedment of 10 inches (250 mm) are required to connect the culvert extension to the existing culvert slab, walls, and floor. Typical locations of the dowels are given for single barrels in Figure 8.2.4.9.1-1 and for multiple barrels in Figure 8.2.4.9.1-2.

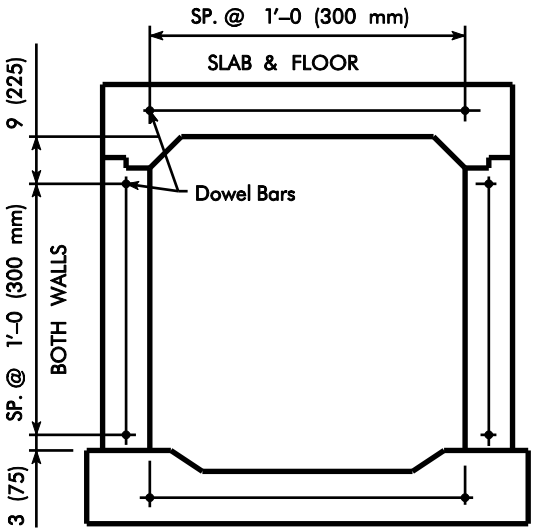

Figure 8.2.4.9.1-1. Cross section at dowels for single barrel extensions

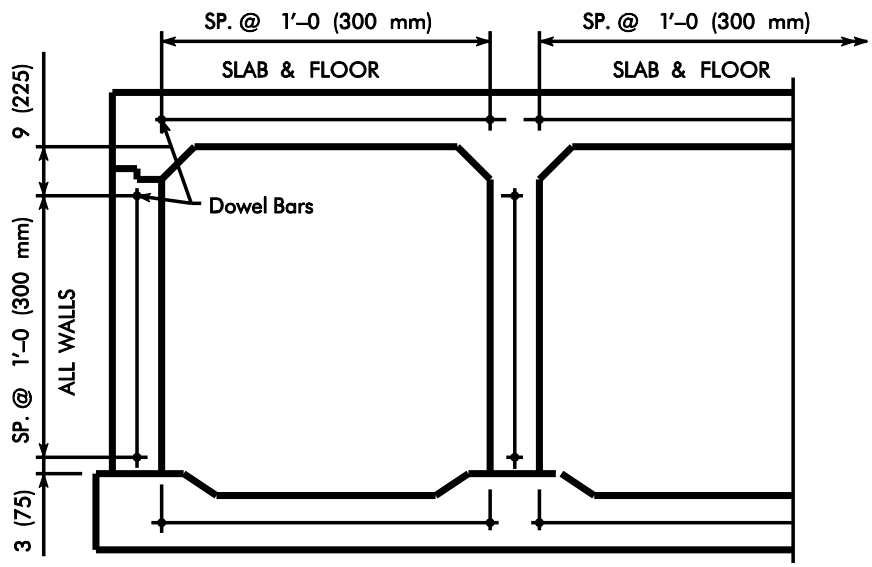

Figure 8.2.4.9.1-2. Cross section at dowels for multiple barrel extensions

The details shown in Figures 8.2.4.9.1-3 through 8.2.4.9.1-5 shall be used for connecting culvert extensions to existing culverts. The flow lines shall match at the joint between the existing culvert and the extension. A section view and plan view similar to those shown below will be required on the plans when transitions are used for the top slab, walls, or floor. The walls should be used to set the transition length, and the same transition length should be used for the slab and floor.

Any dimensional transition required between the existing structure and the extension should be a minimum of 1'-0 (300 mm). For transition differences between existing sections and new sections greater than 2 inches (50 mm), make the transition with a 1:6 slope or shallower. For transitions over 3 feet (900 mm) consult with the supervising Section Leader.

For metric projects the designer shall convert existing English culvert dimensions to metric with a soft conversion.

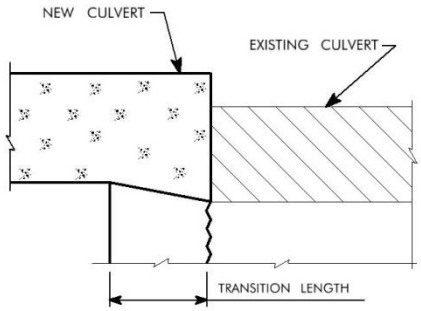

Figure 8.2.4.9.1-3. Section through top slab at extension connection

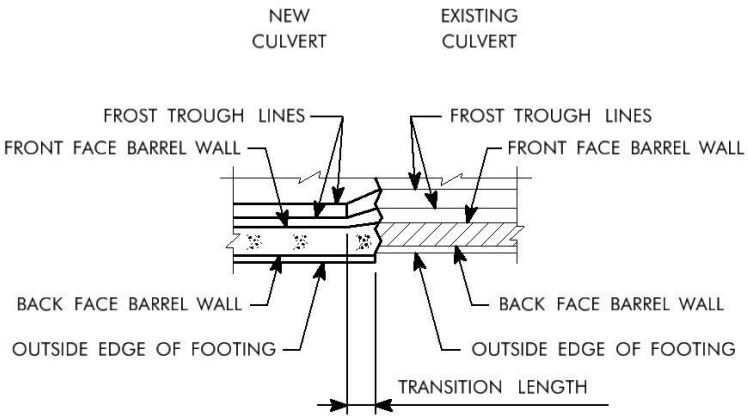

Figure 8.2.4.9.1-4. Plan of frost trough at extension connection to existing frost trough

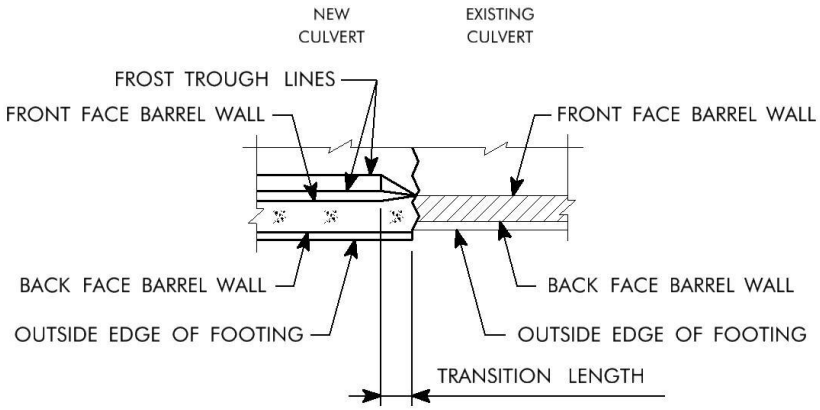

Figure 8.2.4.9.1-5. Plan of frost trough at extension connection to barrel without frost trough

When detailing extension barrel bends adjacent to skewed headwalls, follow the details shown in Figures 8.2.4.9.1-6 and 8.2.4.9.1-7. Use the minimum dimension to the bend, unless the bend occurs some distance away from the headwall, in which case the centerline barrel length shall not exceed 38 feet (11.480 m).

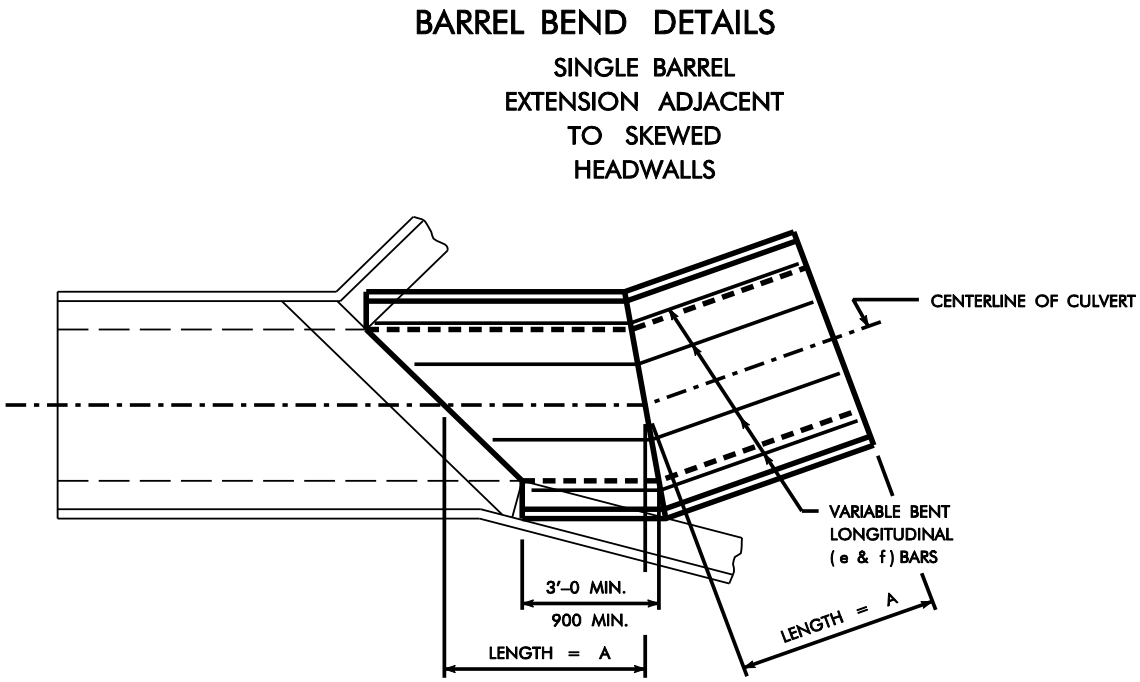

Figure 8.2.4.9.1-6. Barrel bend example for 4-foot (1.200-m) culvert span

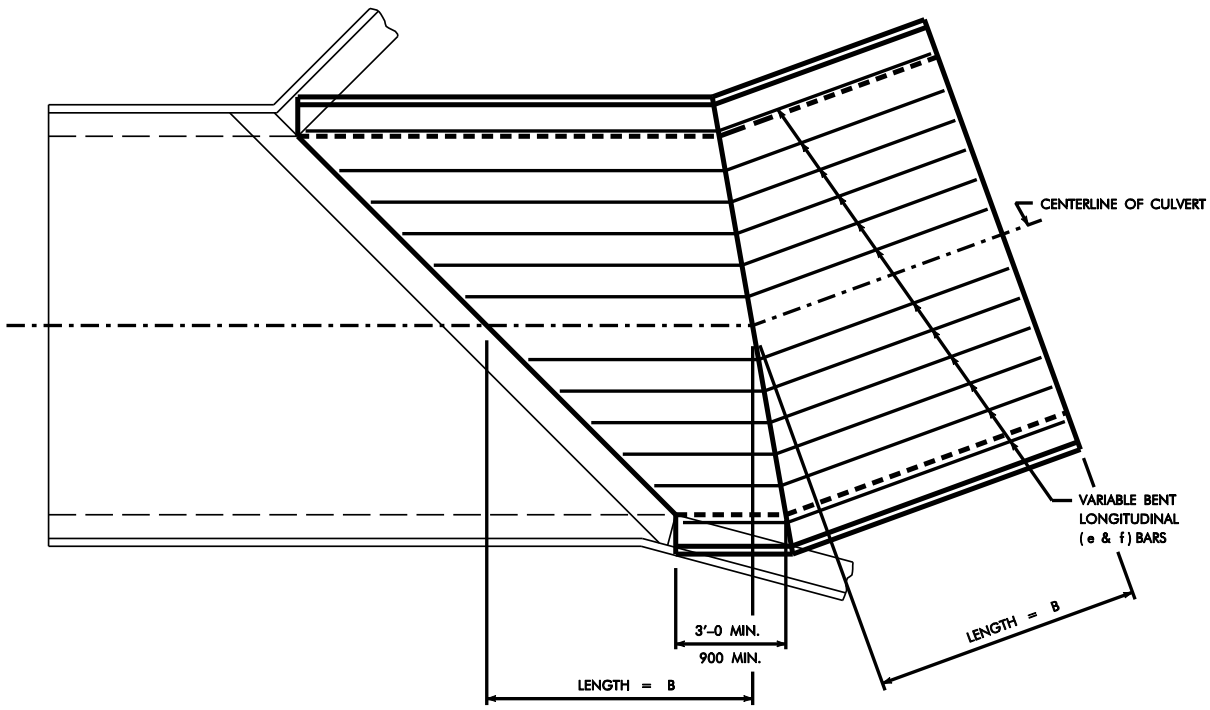

Figure 8.2.4.9.1-7. Barrel bend example for 12-foot (2.400-m) culvert span

At barrel bends, transverse bars shall be flared according to the minimum and maximum spacings specified for barrels on horizontally curved alignments [BDM 8.2.4.5.4.2].

8.2.4.9.2 Skewed reinforcement

For skewed cast-in-place single culvert extensions, the transverse bars shall be placed parallel with the skew angle of the existing parapet and flared as necessary to meet the skew of the new parapet. The designer shall not use this skewed bar placement for twin or triple culvert extensions, as discussed near the end of this article.

Placing the transverse reinforcement at the skew requires that the reinforcement be increased because it will not be parallel with the direction of the span. The increase may be achieved with larger bars and/or closer spacing. Two specific culvert barrel bars need to be adjusted: transverse bars k1 and m1. Also, with certain designs two additional bars will need to be adjusted. These are the k9 and m9 bars at the ends of a culvert section [OBS SS RCB-G2-12], which are used when the horizontal legs of corner bars do not lap across the span of the barrel. These k9 and m9 bars will be identical in bar size to their corresponding k2 and m2 counterparts and need to be adjusted for skewed placement. The adjustment for all of these bars is achieved by multiplying steel areas by the increase factor (1/cos of skew angle), by revising bar sizes and spacings accordingly, and by increasing skewed bar lengths as needed.

The following outlines the process of adjusting the bars for skew placement:

- Determine the area of steel per foot (A_S) for k1, k9, m1, and m9 from either the appropriate standard Culvert Barrel Details sheet (for the extension size and fill) or from CulvertCalc™ IA output for the extension.
- Increase each area of steel by multiplying by the factor (1/cos of skew angle).

- For each increased area, select a bar size and spacing to the nearest conservative half inch. The spacing will be measured and dimensioned along the centerline of the culvert extension and, therefore, the perpendicular bar spacing will be less than the centerline dimension. Preferably the perpendicular spacing should be 6 inches or more to limit splice and development lengths.
- For bars k1, k9, m1, and m9, increase the bar length for the skew by multiplying the length by (1/cos of skew angle).
- See Figures 8.2.4.9.2-1 through 8.2.4.9.2-4 for typical single culvert skewed extension bar placement.

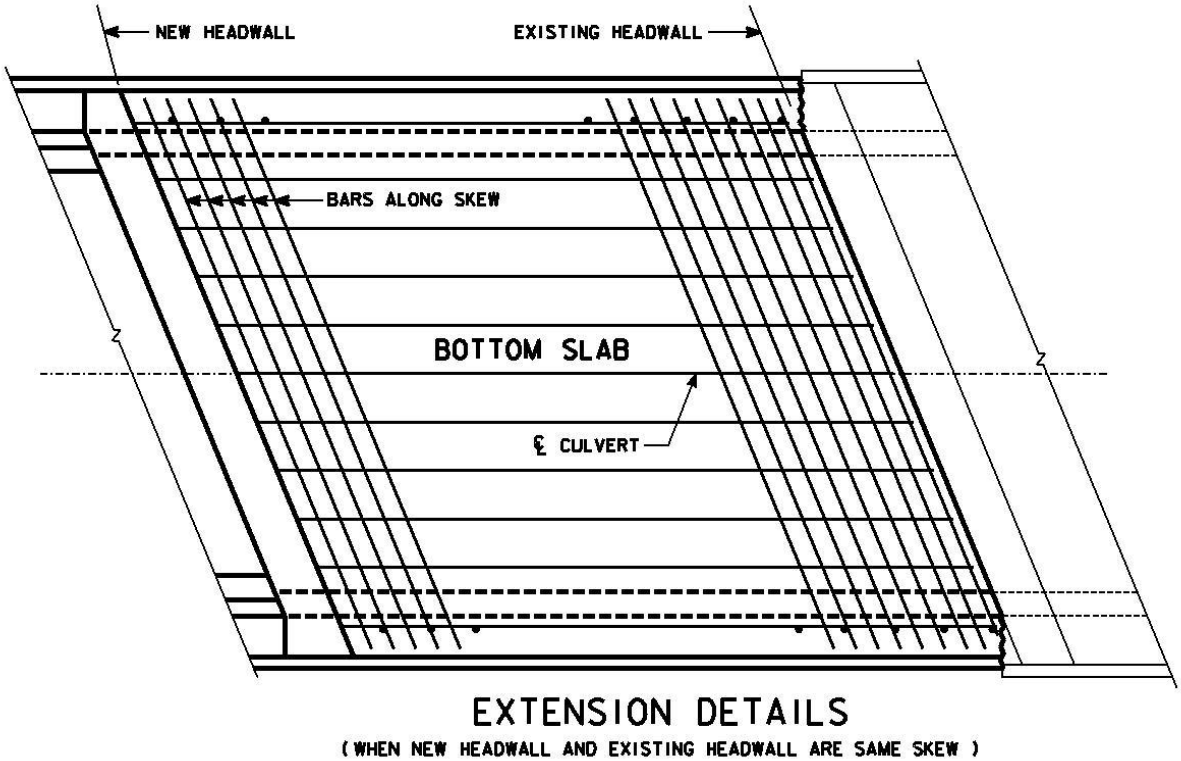

Figure 8.2.4.9.2-1. Bottom of slab skewed k1 bar layout when new headwall and existing headwall are the same skew

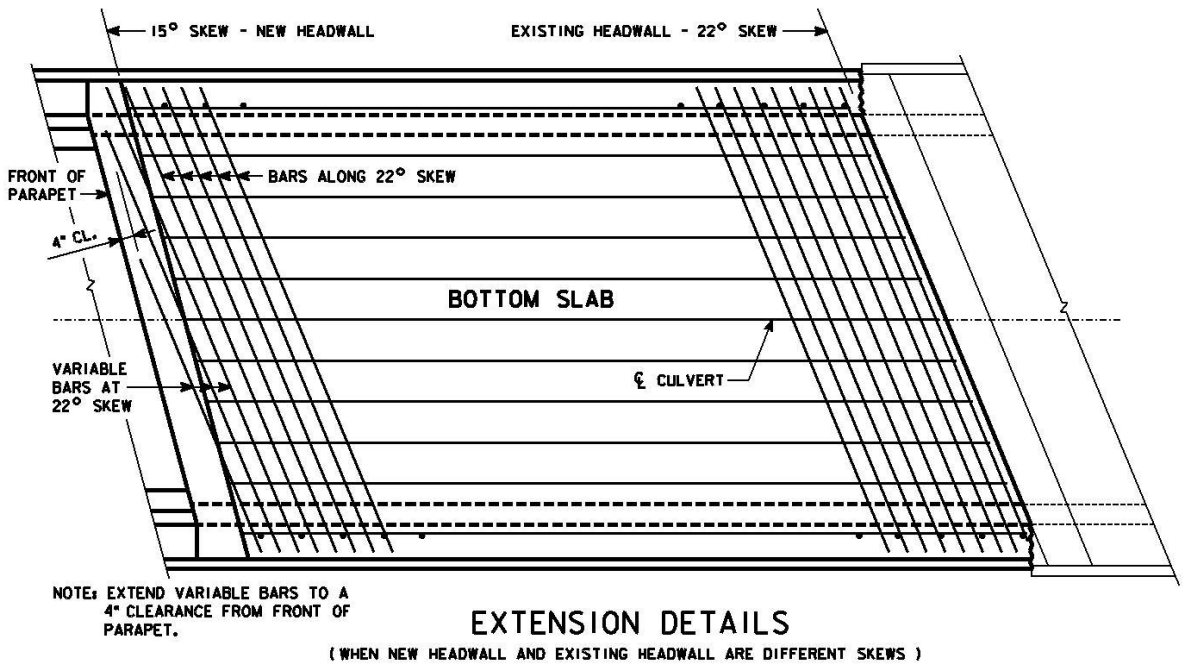

Figure 8.2.4.9.2-2. Bottom of slab skewed k1 bar layout when new headwall and existing headwall have different skews

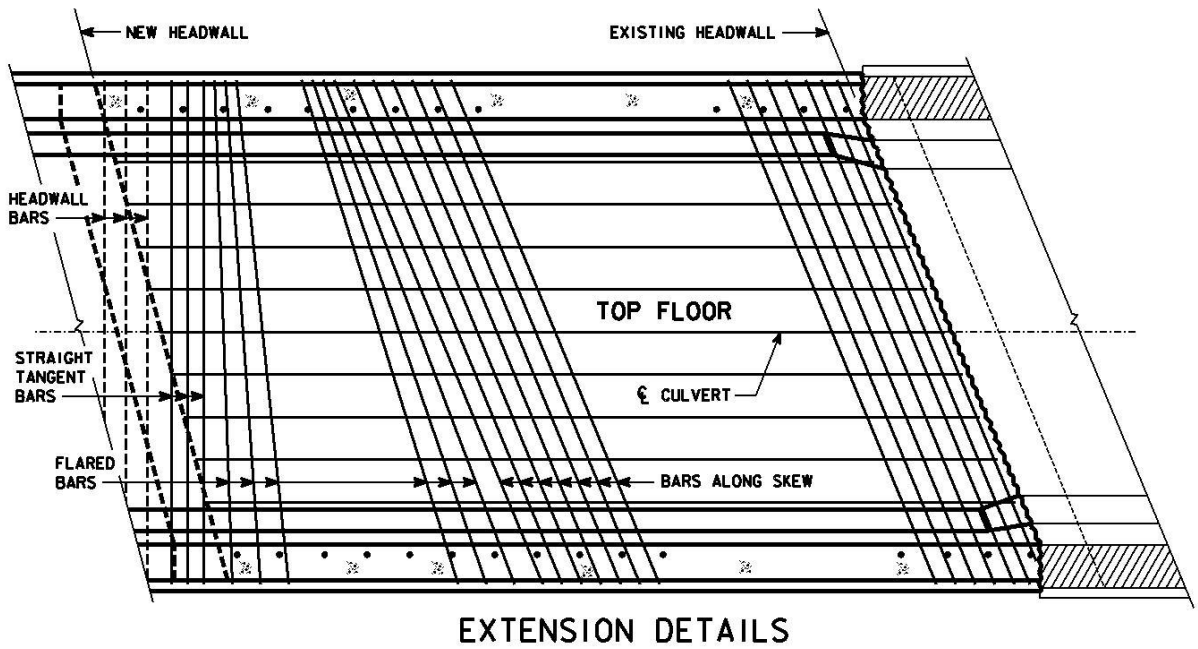

Figure 8.2.4.9.2-3. Top of floor skewed m1 bar layout

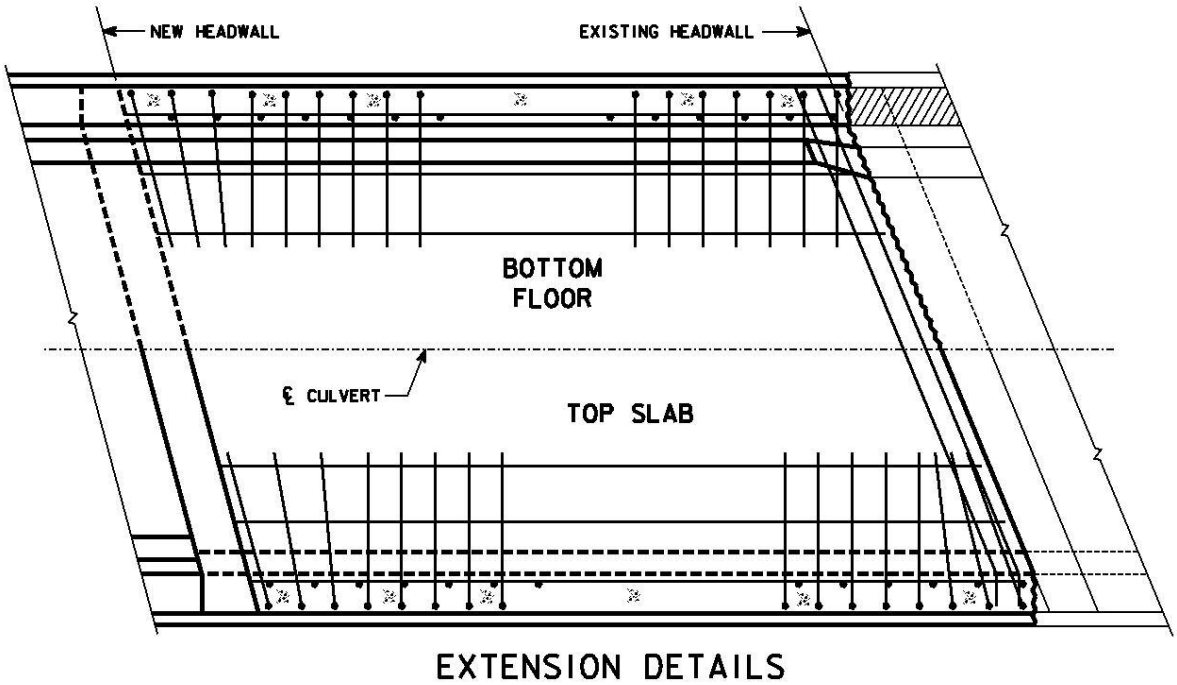

Figure 8.2.4.9.2-4. Bottom of floor and top of slab unskewed k2 and m2 corner bar layout

Skewed twin and triple culvert extensions shall be detailed with transverse and corner reinforcement placed perpendicular to the centerline of the extension as shown in Figure 8.2.4.9.2-5. Placing the reinforcement at the skew is not an option unless approved by the supervising Section Leader.

Twin and triple transverse bars near the existing culvert headwall shall be cut off as shown in Figure 8.2.4.9.2-5. Pairs of additional bars spaced at 4.5 inches (120 mm) shall be provided and placed parallel with the extension connection and located in the top and bottom of the slab and floor to reinforce the edge of the barrel.

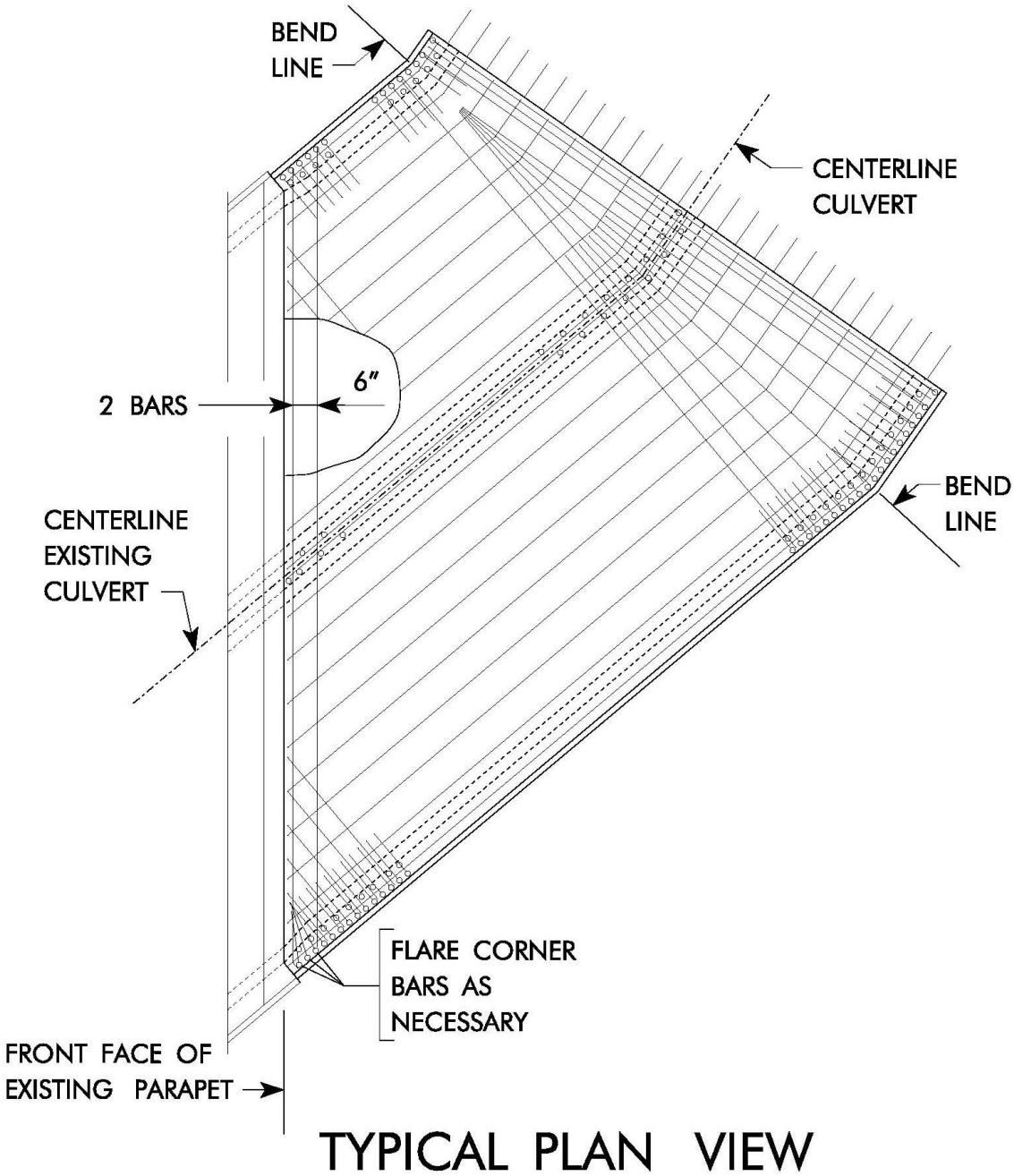

Figure 8.2.4.9.2-5. Reinforcement layout for a skewed twin culvert extension

8.2.4.9.3 Bell joints

When bell joints are to be used with an extension, a minimum of 5 feet (1.500 m) extension along the centerline or 3 feet (900 mm) along the front face of the short wall shall be provided before the bell joint, as shown in Figure 8.2.4.9.3.

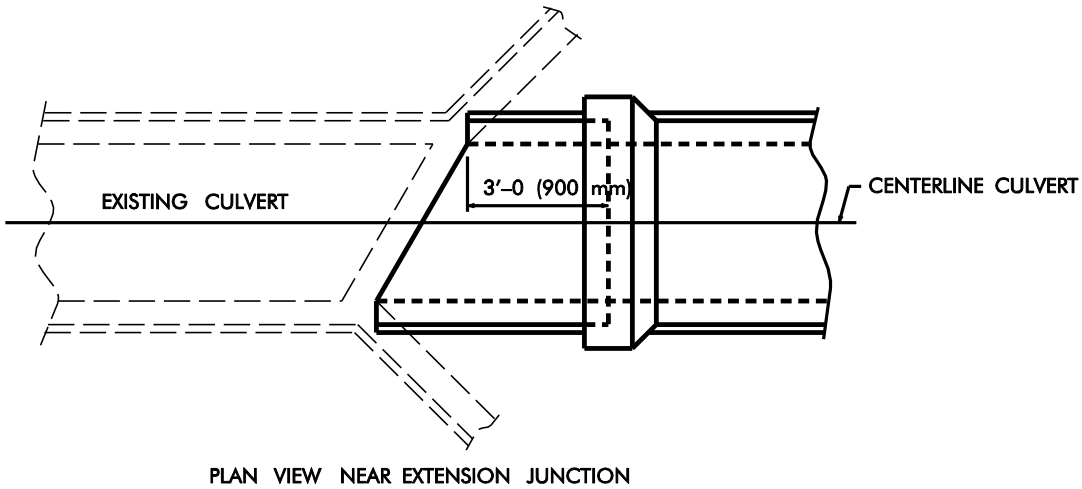

Figure 8.2.4.9.3. Single barrel extension with bell joints

8.2.4.9.4 Backfill

For culvert extensions on roads open to traffic, backfilling to the top of the culvert is to be completed within 14 working days after the curing period has expired [IDOT SS 2402.03, H, 13]. The Office of Design will include the detail “Immediate placement of embankment at culvert extension” [OD RDD 4309] in plans for projects where a culvert extension and road work are to be accomplished at the same time.

When a culvert is to be extended with no simultaneous road work in progress, the detail [OD RDD 4309] must be included with the culvert plans. In this case the Office of Design will provide the embankment detail and all other details and quantities required for incorporation into the bridge office culvert plans.

8.2.4.10 Bridge replacements

In some cases a reinforced concrete box culvert is placed and buried under an existing bridge instead of replacing the bridge. If there is adequate height under the bridge, the space is filled first with flowable backfill and then flowable mortar [OD RDD 4317] or, if there is restricted height, the space is filled entirely with flowable mortar [OD RDD 4318]. In either case the space between the underside of the bridge and top of culvert is backfilled with flowable mortar. For this type of project the culvert contractor needs information about the space between the bridge and culvert. Therefore, the designer shall give on the plans the elevation of the lowest beam (or slab) on the existing structure and the top of slab elevation of the proposed culvert. The difference in elevations shall meet the following criteria:

- For bridges with a beam spacing less than 6 feet (1.800 m), use a minimum clearance of 3 feet (900 mm) between the top of the culvert slab and the bottom of the lowest beam.
- For bridges with a beam spacing 6 feet (1.800 m) or greater, use a minimum clearance of 1 foot (300 mm) between the top of the culvert slab and the bottom of the lowest beam.

Also, the designer shall provide a minimum horizontal clearance of 1.5 feet (450 mm) between existing substructure components and the new culvert as shown in Figure 8.2.4.10-1.

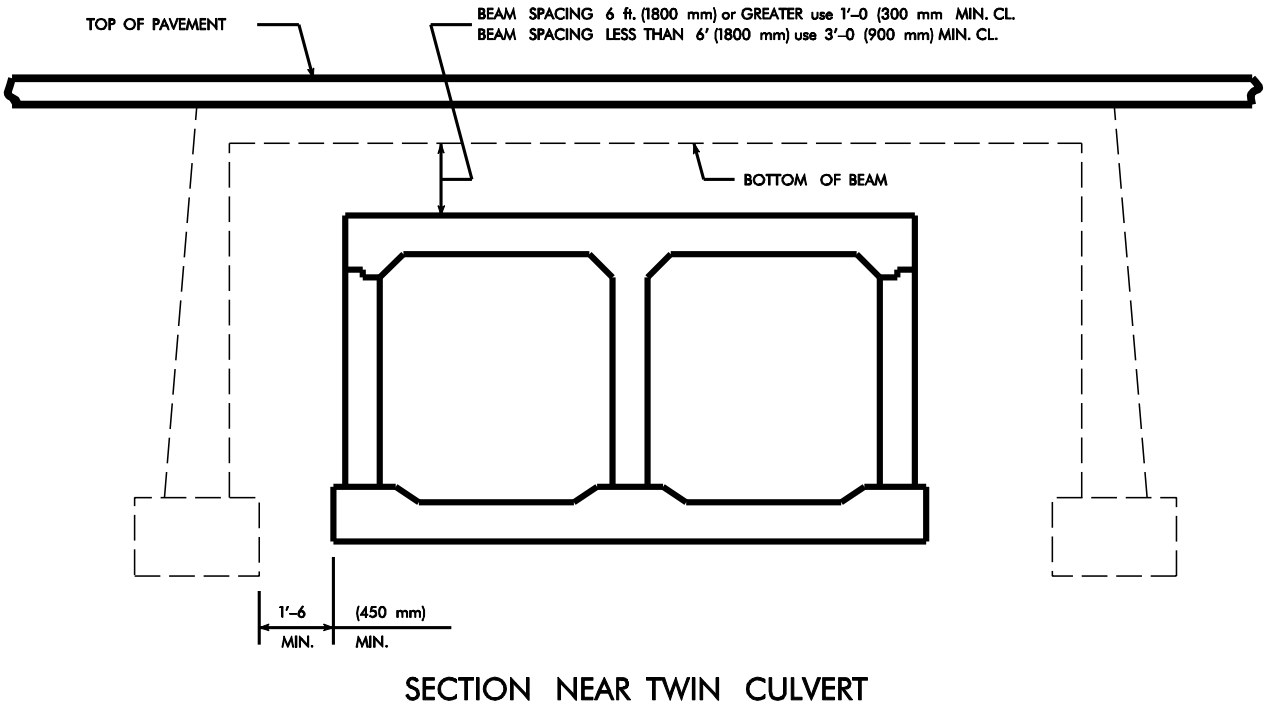

Figure 8.2.4.10-1. Clearances for a culvert backfilled with flowable mortar

If any of the clearances would be less than the minimum shown above, the designer will need to consider other options such as:

- Burying the flowline of a cast-in-place reinforced concrete box culvert,
- Substitution of a precast culvert, or
- Replacement of the bridge.

The designer shall discuss these options with the Preliminary Bridge Section.

For a flowable mortar project, in order to ensure that all the voids under the existing bridge are filled, vent holes will be drilled in the existing bridge deck to facilitate the placement of the mortar. To assist the contractor with this type of project, the designer shall provide a vent hole layout in the culvert plans.

When developing the vent hole layout, use the following guidelines:

- Layout the existing bridge, showing the existing abutment and pier locations and dimensions. In addition, provide the location of the existing beam lines and concrete diaphragms that would restrict the flowable mortar placement.
- Locate any additional existing obstructions that would prevent the flow of mortar near the bottom of the bridge deck.
- Place vent holes along the width of the bridge deck at the same skew angle as the bridge. Along the length of the bridge place holes a minimum of 2 feet (600 mm) and a maximum of 8 feet (2.440 m) away from the abutment. Across the width of the bridge the number of holes depends on beam placement and width of bridge. Place holes a minimum of 2 feet (600 mm) and a maximum of 8 feet (2.440 m) on each side of all beams. Adjacent hole spacing where there is no obstruction between holes shall be a maximum of 16 feet (4.880 m).
- When beams are not present, such as in a continuous concrete slab bridge, the distance from the side of the bridge to the nearest hole shall be a maximum of 8 feet (2.440 m). Adjacent hole spacing where there is no obstruction between holes shall be a maximum of 16 feet (4.880 m).

- Placement of holes along the length of the bridge should depend on existing diaphragm and pier locations and the overall length of the bridge. Locate holes a minimum of 2 feet (600 mm) and a maximum of 8 feet (2.440 m) away from either side of diaphragms and piers. Each possible enclosed or restricted area shall have at least two vent holes. If possible, use a consistent spacing between holes. Adjacent hole spacing where there is no obstruction between holes shall be a maximum of 16 feet (4.880 m).
- When diaphragms are not present, adjacent hole spacing where there is no obstruction between holes shall be a maximum of 16 feet (4.880 m) and a minimum of 10 feet (3.050 m).

Figure 8.2.4.10-2 shows a sample vent hole layout for a skewed bridge.

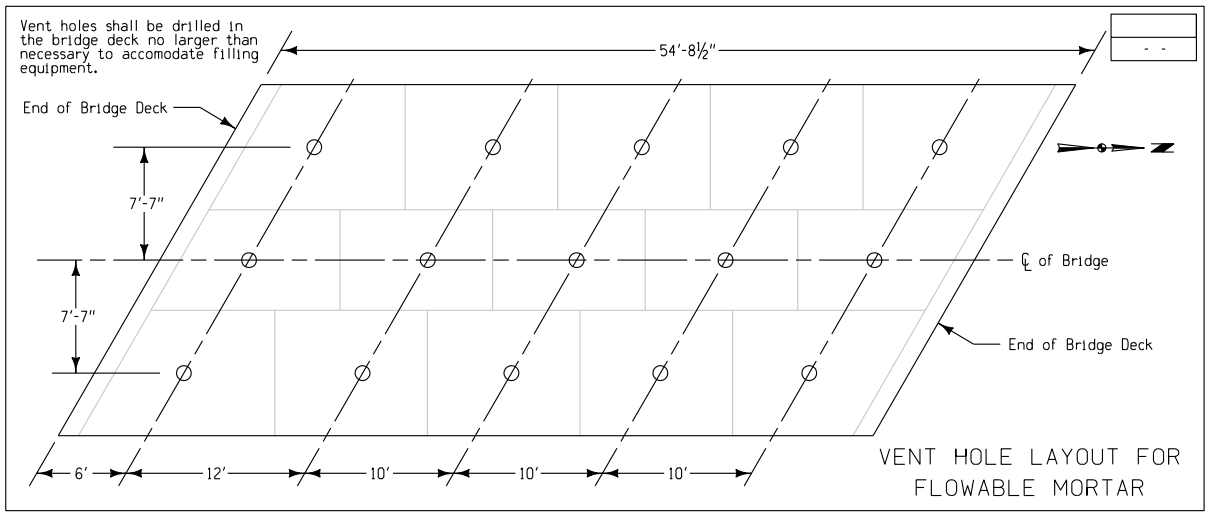

Figure 8.2.4.10-2. Example vent hole layout for a skewed bridge

If the depth of flowable mortar is greater than 5 ft (1.500 m), the designer shall consult with the Soils Design Section for alternatives.

8.2.4.11 Miscellaneous

8.2.4.11.1 Fish baffles or weirs

In some cases the Iowa Department of Natural Resources (Iowa DNR) will require that a reinforced concrete box culvert be detailed for fish passage. Depending on fish characteristics and site conditions, fish passage will require an arrangement of baffles or weirs on the floor of a culvert. The Preliminary Bridge Section will determine the size, spacing, and arrangement, and the designer should follow the guidelines below and use the standard sheets noted:

- Baffles are placed part way across the culvert floor at an angle [OBS SS 1060].
- Weirs are placed completely across culvert openings [OBS SS 1061].
- Baffles or weirs shall not be placed across the culvert joints.
- When baffles or weirs are used, a rock splash basin shall be installed at the outlet end of the culvert as shown in Figure 8.2.4.11.1.

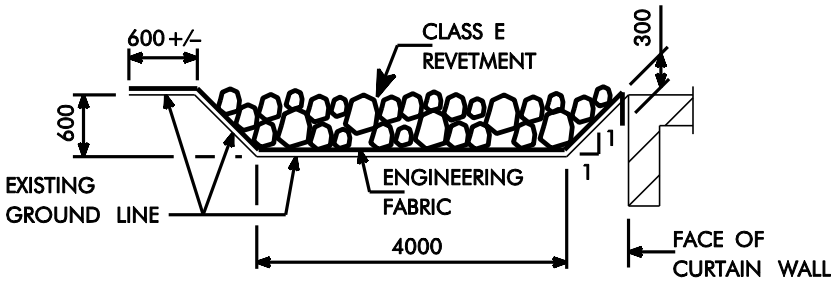

Figure note:

- All dimensions are in millimeters.

Figure 8.2.4.11.1. Rock splash basin at outlet end of culvert

8.2.4.11.2 Drain pipe anchors

In some cases corrugated metal pipe (CMP) or polyethylene pipe (PEP) drainage lines need to be anchored to the tops of wing walls or flumes. For each pipe, the designer shall include in the plans two bars similar to the 5fa fence anchors shown on the “Bill of Reinforcing” on standard flared wing headwall sheets. A detail for a pipe anchor bar is given in Figure 8.2.4.11.2.

The designer also shall require the contractor responsible for furnishing and placing the pipe to furnish and install a ¼-inch (6-mm) diameter galvanized cable over the pipe and clamps to secure the cables.

The designer should indicate on the plans the spacing between the pipe anchor bars and the centerline of the pipe with respect to the front face of the parapet. See Figure 8.2.4.11.2.

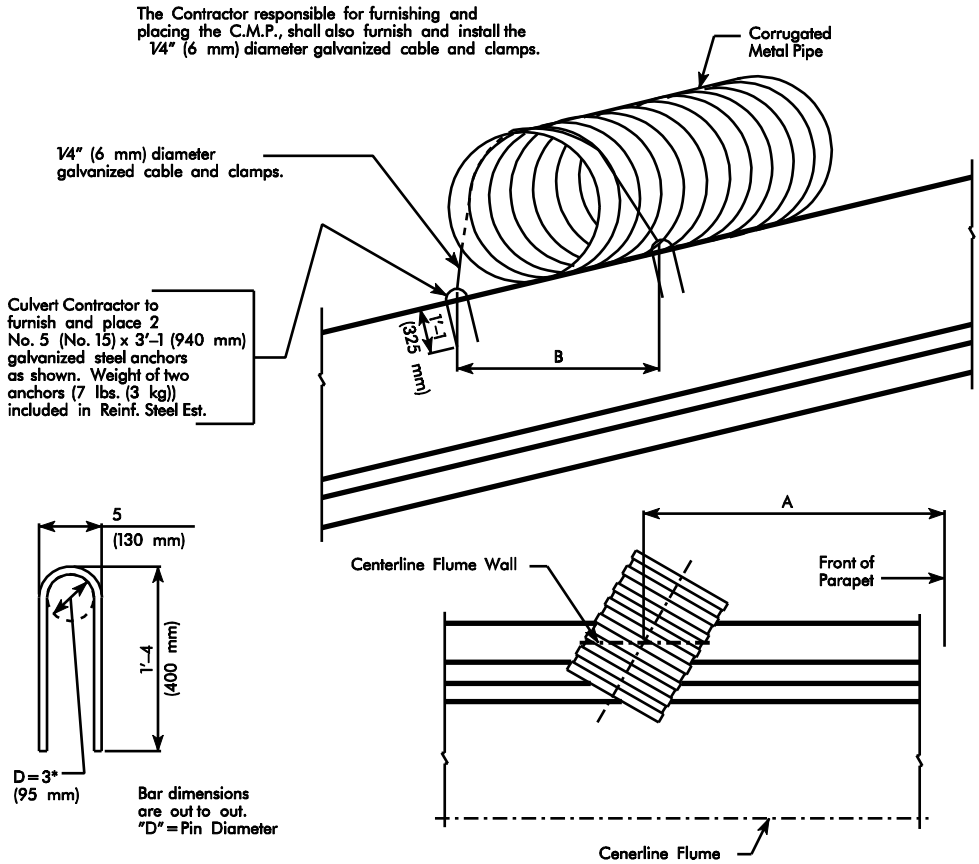

Figure 8.2.4.11.2. CMP anchorage at top of wing wall or flume

8.2.4.11.3 Pipe hand railings

For safety, where pedestrians or bike riders are likely to be near reinforced concrete box culvert inlets or outlets, the preliminary designer will require pipe hand railings at culvert parapets and drop inlets. The pipe hand railings should be detailed with the following considerations:

- Ease of handling and transporting and
- Size of galvanizing tanks [BDM 8.2.4.7.2].

General pipe hand railing details are shown in Figures 8.2.4.11.3-1 to 8.2.4.11.3-3. All posts are to be set vertical. In rural areas the designer should use the horizontal rail spacings shown in Figure 8.2.4.11.3-1 and embed posts one foot (300 mm) into concrete walls. In urban areas the designer should use the horizontal rail spacing shown in Figure 8.4.4.10.1-2 and select the base plate detail so that the hand railing can be replaced easily.

The hand railing sections shall be galvanized after fabrication. Drain holes to facilitate the hot dip galvanizing process shall be shown on the railing shop drawings.

The method of measurement for pipe hand railing is the length from end to end of railing [IDOT SS 2414.05, B].

For drop inlets in rural and urban locations, the railings should be detailed to show the centerline of the top rail to be 3'-6 (1.050 m) above the top of the drop inlet walls, which also should be 3'-10 (1.150 m) above the flowline of the weir. In rural locations the centerline of the bottom rail is to be 1'-9 (525 mm) below the centerline of the top rail. In urban locations the horizontal rails shall be spaced at 7 inches (175 mm) as shown in Figure 8.4.4.10.1-2.

Parapet hand railings for rural locations are detailed the same as for drop inlets, as shown in Figure 8.2.4.11.3-4. However, parapet hand railings for urban locations need to be taller, 4'-8 (1.400 m) as shown in Figure 8.4.4.10.1-2.

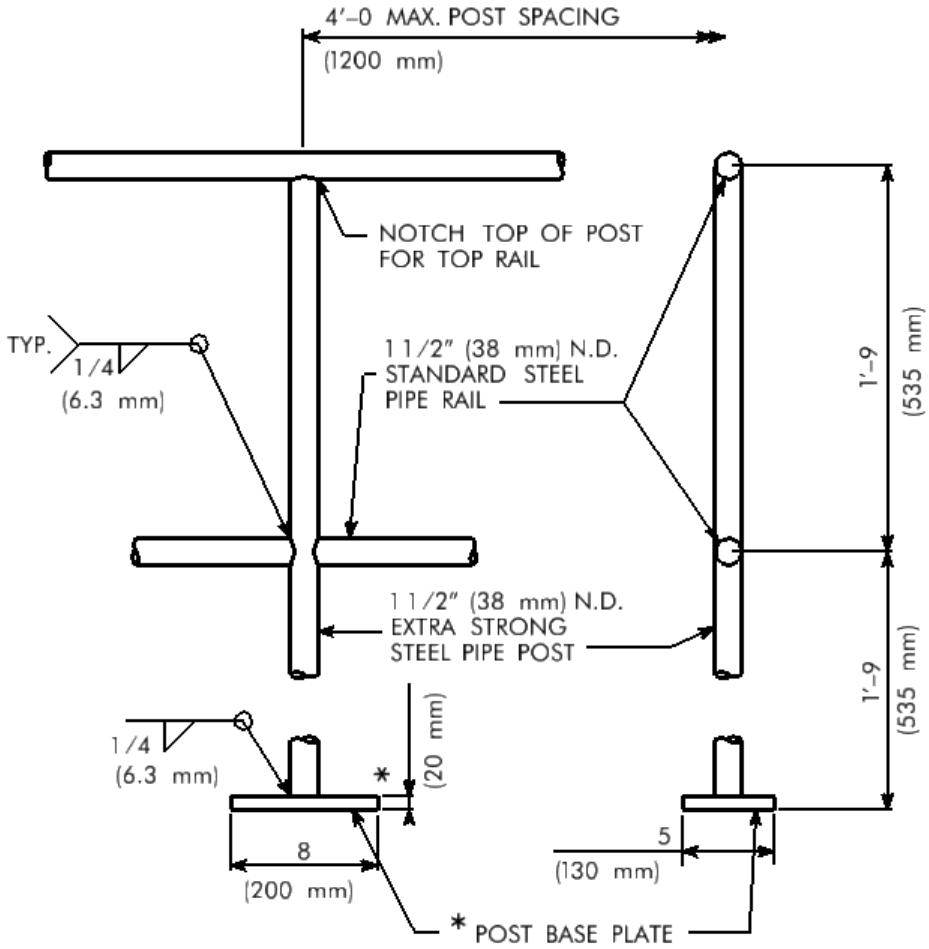

PIPE HANDRAIL DETAILS

* POST BASES ARE TO BE USED IN URBAN AREAS, OTHERWISE EXTEND POST 1'-0 (300 mm) INTO THE WALLS OF THE DROP INLET.

Figure 8.2.4.11.3-1. Typical pipe hand railing details

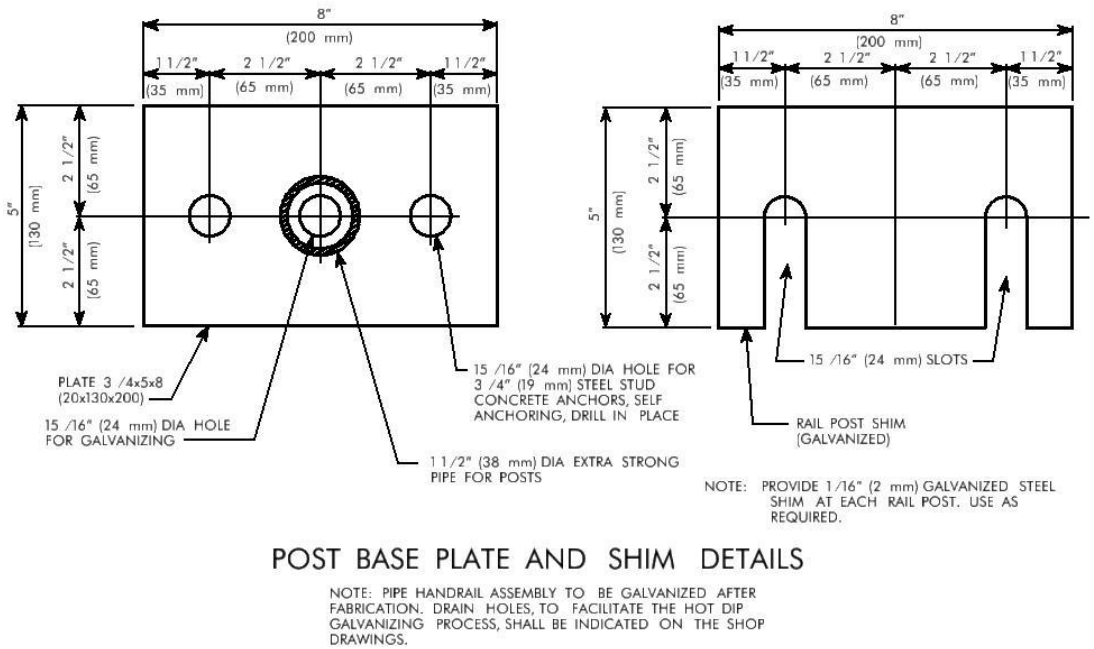

Figure 8.2.4.11.3-2. Typical urban post base plate and shim details

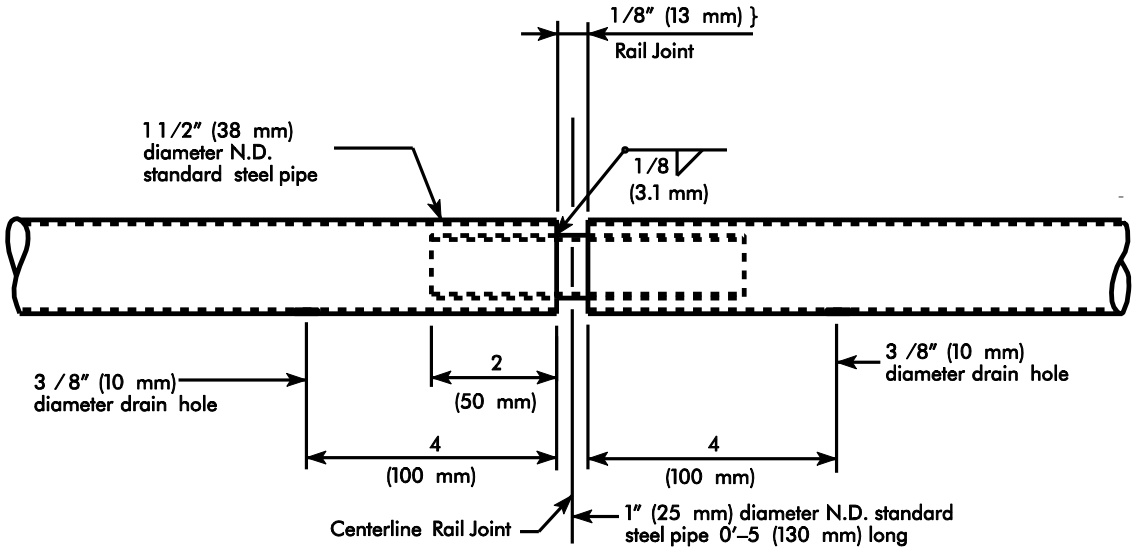

Figure 8.2.4.11.3-3. Typical rail joint detail

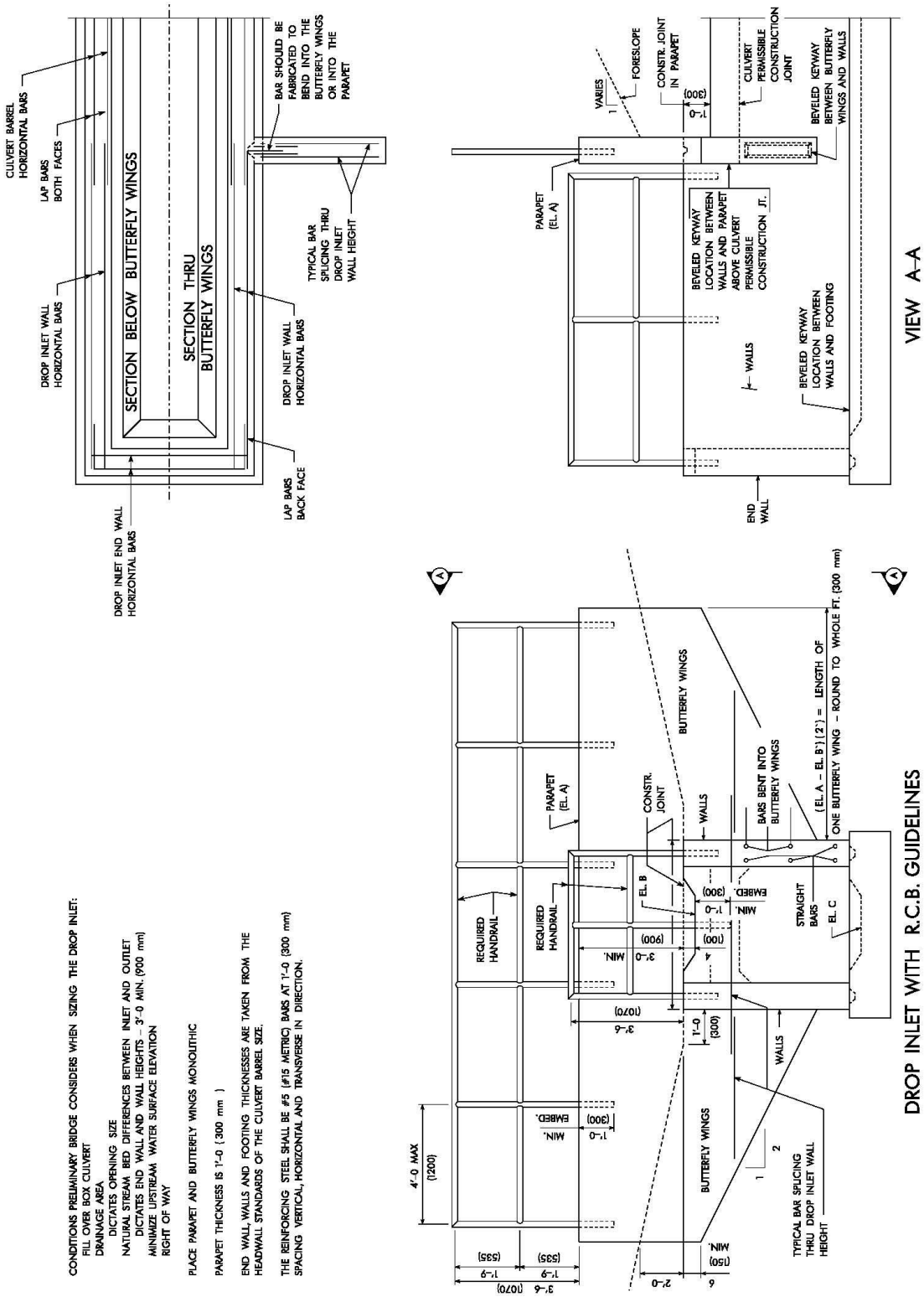

Figure 8.2.4.11.3-4. Rural reinforced concrete box culvert railings

8.3 Precast concrete box

Unless otherwise specified, for primary road projects the office now allows both cast-in-place and precast box culvert alternates under the following project conditions:

- The culvert is an Iowa DOT standard size single box with standard size headwalls at both ends (unless there is an exception for side-by-side boxes on a specific project),
- The span is 6 to12 feet (1.800 to 3.600 m),
- Design earth fill heights are in the range from 2 feet to 25 feet (600 mm to 7.620 m),
- The culvert is not placed directly on bedrock,
- Anticipated culvert settlement is less than 6 inches (150 mm) under these fill heights, and
- There are no conditions requiring bell joints or other details which are available only with cast-in-place box culverts.

Projects meeting these requirements will require the designer to develop plans showing two alternate designs: one for cast-in-place, and one for precast. The designer shall prepare the plans with details and quantities that address both alternates. The Office of Contracts will prepare the bidding documents to allow the contractor to bid on either plan alternate.

For a precast alternate there are three options:

Option A: ASTM C1577 with the end sections and associated details in Iowa DOT Single Precast Reinforced Concrete Box Culvert Standards

- The precast barrel sections shall meet the minimum requirements of ASTM C1577, Table 1.
- Skew shall not exceed 30 degrees.
- The box tie, end section, lintel beam, curtain wall, and embankment protection details shall be taken from Single Precast Reinforced Concrete Box Culvert Standards. General notes, specifications, and design stresses on Sheet PRCB G1-12 also shall apply.
- The contractor shall submit shop drawings for review and documentation, but approval of the drawings is not required.

Option B: Iowa DOT Single Precast Reinforced Concrete Box Culvert Standards

- The precast barrel sections, end sections, and details shall be taken from Single Precast Reinforced Concrete Box Culvert Standards.
- The standards may be used for skews of 45 degrees or less.
- The contractor shall submit shop drawings for review and documentation, but approval of the drawings is not required.

Option C: BOXCAR Version 3.1 designs (or equivalent) with the end sections and associated details in Iowa DOT Single Precast Reinforced Concrete Box Culvert Standards

- The precast barrel sections must be designed with BOXCAR Version 3.1 (or equivalent) and the following conditions:
  - Skew is 45 degrees or less.
  - The live load distribution factor through fill shall be 1.00 (not 1.15).
  - The minimum load factor for horizontal earth pressure shall be 0.90.
  - The maximum reinforcement ratio shall be set to $0.634\rho_b$ to ensure tension controlled sections for flexural design. The maximum reinforcement in the culvert walls shall not exceed 4% of the gross section.
  - Reinforcement clearances shall meet those in Single Precast Reinforced Concrete Box Culvert Standards.
- The box tie, end section, lintel beam, curtain wall, and embankment protection details shall be taken from Single Precast Reinforced Concrete Box Culvert Standards. General notes, specifications, and design stresses on Sheet PRCB G1-12 also shall apply.

- The contractor shall submit shop drawings sealed by a Professional Engineer licensed in the State of Iowa. Approval of the shop drawings by the Office of Bridges and Structures prior to fabrication is required.

The designer may use Option C if barrel details are different from those in the standards or if fill heights exceed those given in ASTM C1577 but do not exceed 25 feet (7.600 m).

For submission of shop drawings the contractor may download and use the precast box culvert submittal sheets available on the Office of Bridges and Structures web page.

The Iowa DOT Single Precast Reinforced Concrete Box Culvert Standards were developed from Minnesota DOT precast concrete box culvert standards, but the Office of Bridges and Structures has chosen to deviate from those standards based on past Iowa practice and other factors. Culvert fabricators that serve both states need to consider the differences carefully.

Following are the plan development guidelines for projects ~~that include cast-in-place and precast alternates.~~ when precast concrete boxes are required or an alternate to cast-in-place culverts. Both the precast and cast-in-place culverts would be considered alternates.

- Preliminary Bridge shall prepare the preliminary design (TS&L) ~~for a cast-in-place culvert.~~ for a precast culvert length when precast is required and cast-in-place is not an option. If the culvert structure is a candidate for either a precast or cast-in-place culvert, Preliminary Bridge will prepare the preliminary design (TS&L) for a cast-in-place culvert length and the final designer is responsible for determining the overall length for the precast culvert.

- If the culvert structure is a candidate for either a precast or cast-in-place culvert, Preliminary Bridge will prepare the preliminary design for the cast-in-place culvert and the final detailer should copy the preliminary TS&L CADD file designed for the cast-in-place culvert and change the Situation Plan/Longitudinal Section to represent the precast culvert alternate, adjusting the length accordingly.

- The final detailer should ~~copy the preliminary cast-in-place TS&L CADD file or V8 model and prepare the Situation Plan/Longitudinal Section for the cast-in-place alternate design.~~ note the following when determining the precast culvert length:

  - The foreslope for a precast culvert should intercept the bottom of the parapet (lintel beam) which would make the overall length longer than the alternate cast-in-place culvert where the foreslope intercepts the top of the parapet. Compare Figure 8.3 below with Figure 8.2.
  - The overall length for the precast culvert should be adjusted so it is a whole foot length (converted to meters) needed to achieve the minimum back to back parapet (lintel beam) length.

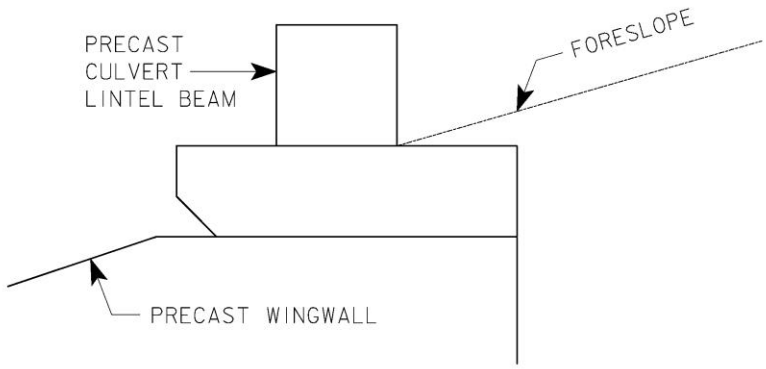

Figure 8.3. Foreslope-Lintel beam intersection diagram

- ~~The final detailer should then copy the Situation Plan/Longitudinal Section for the cast-in-place alternate design and modify the details to show a precast culvert with precast headwalls. The detailer shall modify details as follows:~~
  - ~~Eliminate barrel joints because the number of sections is dependent on the box size and precast supplier.~~
  - ~~Adjust dimensions for back to back of parapet and left and right of center line. For the typical 3.5:1 precast concrete culvert foreslopes, the left and right lengths should be increased by 5.5 feet (1.675 m) divided by the cosine of the skew angle and rounded up to the nearest even foot (converted to meters). This adjustment or a similar adjustment for alternate foreslopes compensates for the difference between the cast-in-place and precast culvert geometry.~~
  - Show Class E revetment around both headwalls as on the standard sheet [OBS SS PEP 1-12].
  - Adjust dimensions for back to back of parapet and left and right of center line from the cast-in-place culvert length to the alternate precast culvert length. For the typical 3.5:1 foreslopes, the left and right lengths of the cast-in-place culvert lengths should be increased by 5.5 feet (1.675 m) divided by the cosine of the skew angle and rounded up to the nearest whole foot (converted to meters). This length adjustment compensates for the difference between the cast-in-place and precast culvert geometry and a similar length adjustment should be used accordingly for different foreslopes.

- The design earth fill height shown on the plans for the cast-in-place alternate should remain the same for the precast alternate.

- The final detailer shall prepare one title sheet with two alternate sets of detail plans, one for the cast-in-place culvert and one for the precast culvert. This will result in two sets of Estimated Quantities with notes on the Index of Sheets table on the title sheet. Cast-in-place and precast culvert details will be as normally shown with referral to the Iowa DOT Single Box Culvert Standards.

- Projects with multiple culvert designs shall include a culvert estimate sheet for each alternate design (precast and cast-in-place). The location of each Estimated Quantity table should be noted in the Index of Sheets on the Title Sheet.

- These are the V8 model naming conventions:

  The cast-in-place naming convention is CCDDDDSC01, CCDDDDSC02P, CCDDDDSC03, etc. The SC represents Sheet Cast-in-place models.

Precast naming convention is CCDDDDSP01, CCDDDDSP02P, CDDDDSP03, etc. The SP represents Sheet Precast model names.

Both cast-in-place and precast V8 models are in the same V8 file because all details are for the same project.

The CC which is County Number and DDDD is Design Number are the same for both cast-in-place and precast plans.

8.3.1 Loads

Design loads for a precast box culvert are generally the same as for a cast-in-place RCB of the same size, span, and height of fill. See the loads articles for reinforced concrete box culverts [BDM 8.2.1].

8.3.2 Load application

Load application for a precast box culvert generally is the same as for a cast-in-place RCB of the same size, span, and height of fill. See the precast Option C conditions [BDM 8.3] and load application articles for reinforced concrete box culverts [BDM 8.2.2].

8.3.3 Analysis and design

Precast concrete box culverts shall be designed structurally by the load and resistance factor design (LRFD) method. The LRFD analysis and design requirements for the ASTM C1577 barrel sections (Option A) are contained in the aforementioned document. The LRFD analysis and design requirements in this section specifically apply to Options B and C. Any designs performed under Option C [BDM 8.3] shall be based on the LRFD design criteria used in the development of the Option B standards. For design conditions that do not fit the available standard designs in Options A or B or if Option C [BDM 8.3] is chosen the office prefers that the precast box culvert producer uses software available from the American Concrete Pipe Association (ACPA): BOXCAR (Box Culvert Analysis and Reinforcing Design) Version 3.1 on which the Option B standards are based. Options A and B generally require no analysis and design.

The minimum floor, slab, and wall thickness for culverts with 6-foot (1.83-m) spans is 8.0 inches (200 mm). For culverts of all other spans, the minimum thicknesses are 8.0 inches (200 mm) for walls, 9.0 inches (225 mm) for the slab, and 10.0 inches (250 mm) for the floor. The maximum desirable thickness for any member of any culvert size is 12.0 inches (300 mm). If this requirement cannot be met when assuming a concrete compressive strength of f'c = 5 ksi (34 MPa) without the addition of shear reinforcing, a concrete compressive strength of f'c = 6 ksi (41 MPa) may be used.

The standard precast designs assume traffic is travelling parallel to the span. This assumption is considered to provide adequate designs for culverts skewed to a maximum of 45 degrees. The standard precast designs may need to be redesigned if skew angles exceed 45 degrees.

When the Soils Design Section or geotechnical consultant does not provide site-specific information the designer should use the following cohesionless soil properties in design.

- Angle of internal friction (φ) 30 degrees
- Unit weight of saturated soil 0.135 kcf (2160 kg/m^3)
- Unit weight of dry soil 0.120 kcf (1920 kg/m^3)
- Unit weight of water 0.0624 kcf (1000 kg/m^3)

In general, the designer should model components of box culverts using typical 12-inch (305-mm) wide strips for analysis and design.

8.3.4 Detailing

Reserved.

8.3.4.1 Extensions

On a case-by-case basis the office allows precast culvert extensions of existing single cast-in-place or precast box culverts. For an extension the contractor has the same three design options as for new precast culverts [BDM 8.3].

Except for the connection between the existing culvert and extension covered by standard sheets [OBS SS 1043P-1045P], precast box culvert extension projects are treated the same as new precast box culvert projects.

8.3.4.2 Miscellaneous

8.3.4.2.1 Fish baffles or weirs

In some cases the Iowa Department of Natural Resources (Iowa DNR) will require that a precast box culvert be detailed for fish passage. Depending on fish characteristics and site conditions, fish passage will require an arrangement of baffles or weirs on the floor of a culvert. The Preliminary Bridge Section will determine the size, spacing, and arrangement, and the designer should follow the guidelines below and use the standard sheets noted:

- Baffles are placed part way across the culvert floor at an angle [OBS SS 1060P].
- Weirs are placed completely across culvert openings [OBS SS 1061P].
- Baffles or weirs shall not be placed across the culvert joints.
- When baffles or weirs are used, a rock splash basin shall be installed at the outlet end of the culvert as shown in Figure 8.2.4.11.1.

8.3.4.2.2 Weep holes

In cases such as a nearby natural spring, high water table, or use of a drainage blanket where it is advisable to reduce hydraulic pressure on a precast concrete box culvert, the Soils Design Section or preliminary designer will recommend that weep holes be placed in exterior walls. The 4-inch (100-mm) diameter weep holes normally are placed in pairs, with the bottom hole one foot (300 mm) above the flow line. The top hole is placed one foot (300 mm) above the bottom hole and offset one foot (300 mm), as shown in Figure 8.3.4.2.2-1.

Each hole is covered with a rodent screen consisting of a 24-inch square by 1/4 inch (600 mm square by 6 mm) galvanized hardware cloth centered on the weep hole. Normally the culvert contractor is required to place porous backfill over the weep holes, as shown in Figure 8.3.4.2.2-2, and also to furnish and place granular backfill material when completing the Class 20 excavation.

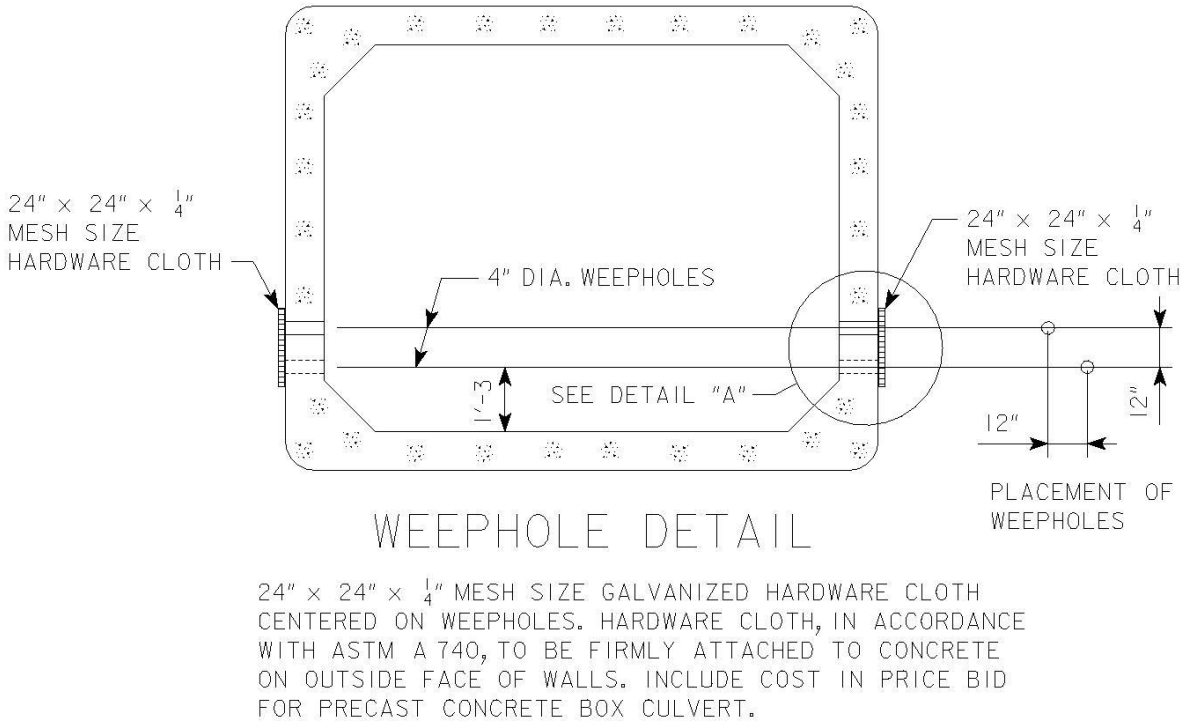

Figure 8.3.4.2.2-1. Exterior wall weep hole detail

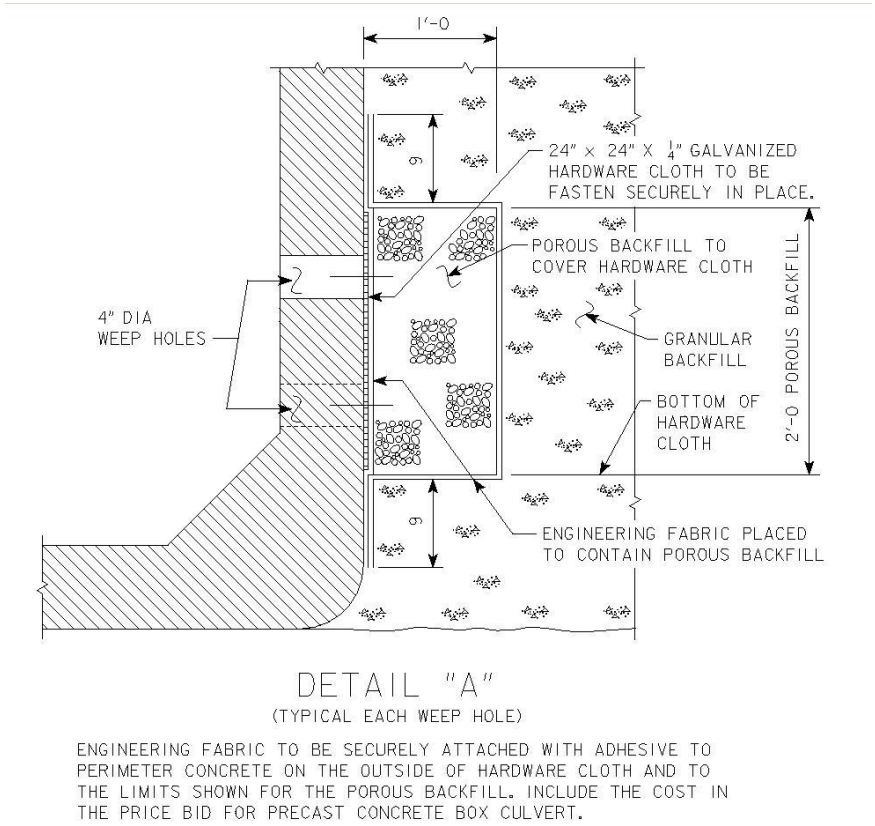

Figure 8.3.4.2.2-2. Typical individual weep hole detail

8.4 Concrete pipe

In general concrete pipe design and detailing is based on the Office of Design's Standard Road Plans (RF series) and Road Design Details (1000 series). Only in unusual cases are pipe culverts custom designed.

8.4.1 Loads

Reserved.

8.4.2 Load application

Reserved.

8.4.3 Analysis and design

Reserved.

8.4.4 Detailing

8.4.4.1 Standard plans

See the Office of Design's Standard Road Plans (RF series) and Road Design Details (1000 series).

8.4.4.2 Software

Reserved.

8.4.4.3 Plan preparation

Reserved.

8.4.4.4 General

Reserved.

8.4.4.5 Pipes

Reserved.

8.4.4.6 Headwalls

Reserved.

8.4.4.7 Inlets

Reserved.

8.4.4.8 Outlets

8.4.4.8.1 Flumes

For a site with considerable elevation difference the preliminary designer may add a flume at a pipe culvert outlet. In general the flume will be similar to a flume for a reinforced concrete box culvert, as indicated in the details in Figure 8.4.4.8.1.

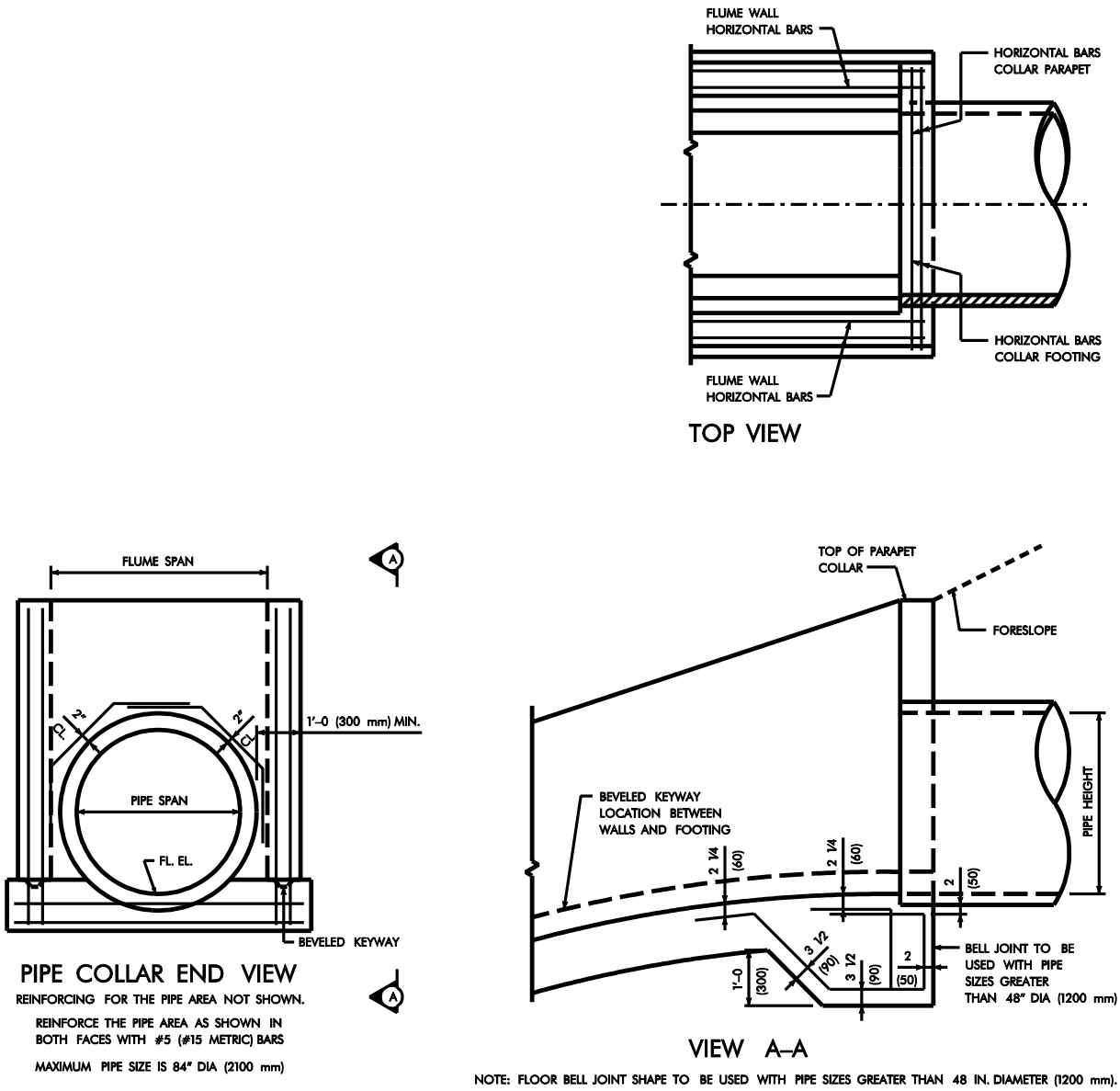

Figure 8.4.4.8.1. Flume details for standard reinforced concrete pipe

So that there is adequate wall thickness around the pipe for the cast-in-place, one-foot (300-mm) thick collar, the designer shall size the flume using Table 8.4.4.8.1.

Table 8.4.4.8.1. Flume size and height for standard reinforced concrete pipe

Reinforced Concrete Pipe Size		Flume Size		Height from flowline to top of parapet	
English (Inches)	Metric (mm)	English (feet x feet)	Metric (mm x mm)	English (ft-in)	Metric (mm)
24	600	3 x 3	900 x 900	5’-4	1600
30	750	4 x 4	1200 x 1200	6’-4	1900
36	900	5 x 3	1500 x 900	5’-4	1600
42	1050	5 x 4	1500 x 1200	6’-4	1900
48	1200	6 x 4	1800 x 1200	6’-4	1900
54	1350	6 x 5	1800 x 1500	7’-4	2200
60	1500	8 x 5	2400 x 1500	7’-4	2200
66	1650	8 x 6	2400 x 1800	8’-4	2500
72	1800	8 x 6	2400 x 1800	8’-4	2500
84	2100	10 x 8	3000 x 2400	10’-4	3100

For skewed pipe culvert alignments 30° and greater with an embankment slope of 3:1, the slope of the top of the flume wall should be set at 4:1 to accommodate the skew.

8.4.4.9 Extensions

Reserved.

8.4.4.10 Miscellaneous

Reserved.

8.4.4.10.1 Pipe hand railings

For safety, where pedestrians or bicyclists are likely to be near pipe culvert inlets or outlets, the preliminary designer will require pipe hand railings at culvert parapets and drop inlets. The pipe hand railings should be detailed with the following considerations:

- Ease of handling and transporting and
- Size of galvanizing tanks [BDM 8.2.4.7.2].

General pipe hand railing details are shown in Figures 8.2.4.11.3-1 to 8.2.4.11.3-3. All posts are to be set vertical. In rural areas the designer should use the horizontal rail spacings shown in Figure 8.4.4.10.1-1 and embed posts one foot (300 mm) into concrete walls. In urban areas the designer should use the horizontal rail spacing shown in Figure 8.4.4.10.1-2 and select the base plate detail so that the hand railing can be replaced easily.

The hand railing sections shall be galvanized after fabrication. Drain holes to facilitate the hot dip galvanizing process shall be shown on the railing shop drawings.

The method of measurement for pipe hand railing is the length from end to end of railing [IDOT SS 2414.05, B].

For drop inlets in rural and urban locations, the railings should be detailed to show that the centerline of the top rail to be 3'-6 (1.050 m) above the top of the drop inlet walls, which also should be 3'-10 (1.150 m) above the flowline of the weir. In rural locations the centerline of the bottom rail is to be 1'-9 (525 mm) below the centerline of the top rail. In urban locations the horizontal rails shall be spaced at 7 inches (175 mm) as shown in Figure 8.4.4.10.1-2.

Parapet hand railings for rural locations are detailed the same as for drop inlets, as shown in Figure 8.4.4.10.1-1. However, parapet hand railings for urban locations need to be taller, 4’-8 (1.400 m) as shown in Figure 8.4.4.10.1-2.

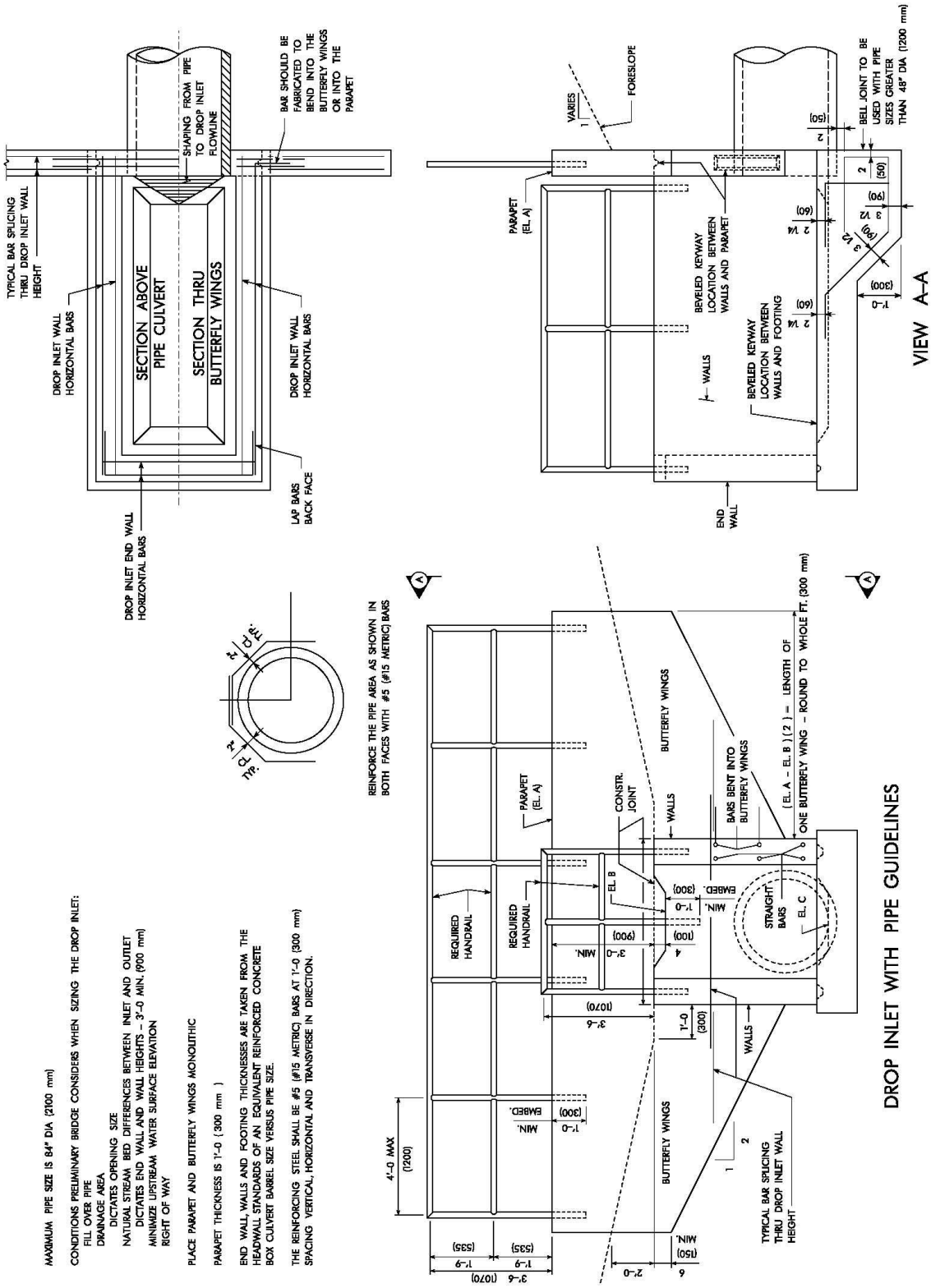

Figure 8.4.4.10.1-1. Rural pipe culvert railings

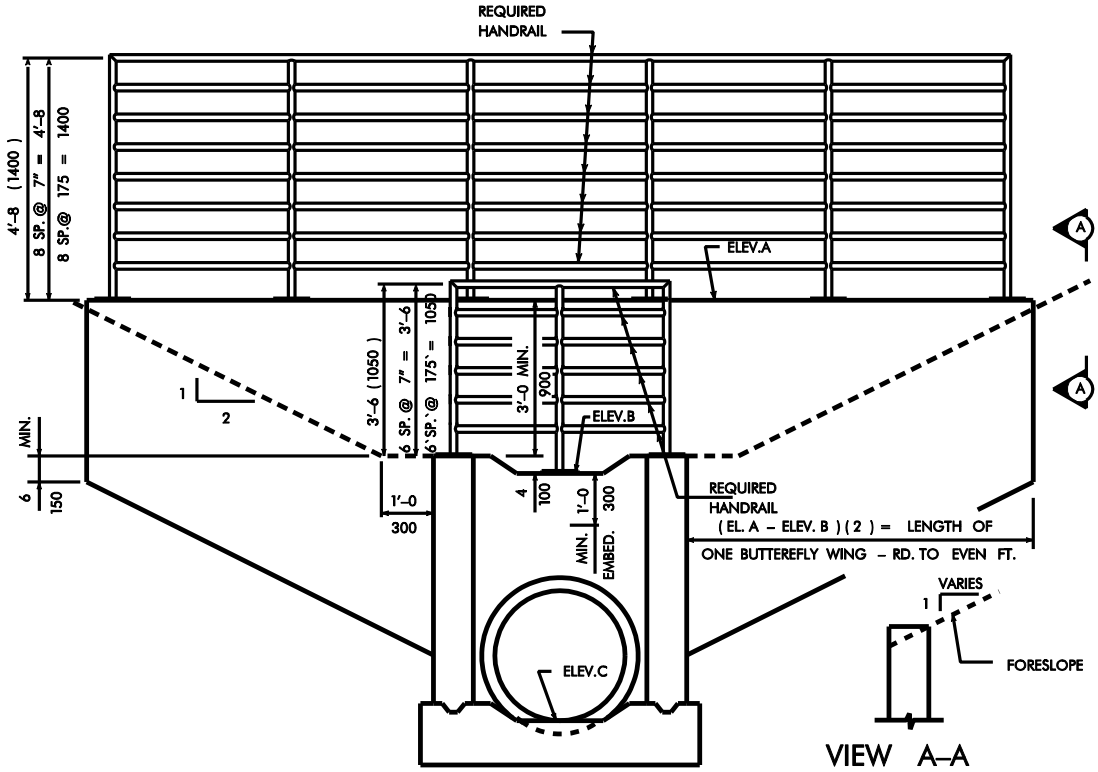

Figure 8.4.4.10.1-2. Urban pipe culvert railings