Precast Box Culvert Standards

Barrel and End Section Design Methodology

January 2017

Developed For:

Iowa Department of Transportation

Developed By:

Foth

Foth Infrastructure & Environment, LLC

Table of Contents

1 Definitions 1
2 Abbreviations 1
3 Background 1
4 Material Properties and Constants 2
5 Box Culvert Geometry 2
5.1 Box Sizes 2
5.2 Fill Height 3
5.3 Member Thicknesses 3
5.4 Haunch 3
5.5 Skew 3
6 Loads for Barrel Design 3
6.1 Load Factor and Load Modifier Summary 3
6.2 Dead Load – Self-Weight (DC) 4
6.3 Dead Load – Additional Dead Loads (DW) 4
6.4 Vertical Earth Pressure (EV) 4
6.5 Horizontal Earth Pressure (EH_{Min} and EH_{Add}) 4
6.6 Water Pressure (WA) 5
6.7 Live Load Surcharge (LS) 5
6.8 Live Load (LL+IM) 5
6.9 Load Cases and Combinations 6
7 Structural Analysis of Barrels 7
8 Barrel Design 8
8.1 Resistance Factors 8
8.2 Reinforcing Layout 8
8.3 Critical Sections 9
8.4 Reinforcing Wire Diameter and Maximum Spacing 10
8.5 Strength-Level Flexural Reinforcing Requirements 11
8.6 Crack Control Requirement 11
8.7 Minimum Reinforcing Requirements 11
8.8 Maximum Reinforcing Requirements 12
8.9 Shear Capacity 12
8.10 Development of Welded Wire Reinforcing 12

9 Adjustments to BOXCAR Default Settings for Barrel Design 13
10 Loads for End Section Design 14
10.1 Load Factors and Load Modifiers 14
10.2 Dead Load – Self-Weight (DC) 14
10.3 Dead Load – Additional Dead Loads (DW) 14
10.4 Vertical Earth Pressure (EV) 14
10.5 Horizontal Earth Pressure (EH_{Min} and EH_{Add}) 14
10.6 Water Pressure (WA) 14
10.7 Live Load Surcharge (LS) 14
10.8 Live load (LL+IM) 14
10.9 Load Combinations 15
10.10 Comparison to CIP Headwall Standards 16
11 Structural Analysis of End Sections 17
11.1 Design Model for AH Steel In Walls 17
11.2 Design Model for AH Steel in Floor 17
11.3 Design Model for As3 Steel in Floor 17
11.4 Design Model Steel on Inside Face of Wall 17
11.5 Design Model for Ab Steel in the Slab of Type 1 End Sections 18
11.6 Design Model for A_t Steel in the Slab of Type 1 End Sections 18
11.7 Parapet and Lintel Beam Design Model 18
12 End Section Design 18
12.1 Resistance Factors 18
12.2 Type 3 Reinforcing Layout 18
12.3 Type 1 Reinforcing Layout 19
12.4 Critical Sections 20
12.5 Reinforcing Wire Diameter and Maximum Spacing 20
12.6 Strength-Level Flexural Reinforcing Requirements 20
12.7 Crack Control Requirement 20
12.8 Minimum Reinforcing Requirements 21
12.9 Maximum Reinforcing Requirements 21
12.10 Shear Capacity 21

1 Definitions

Slab – The top horizontal member of the culvert

Floor – The bottom horizontal member of the culvert

2 Abbreviations

AASHTO – American Association of State Highway and Transportation Officials

ASTM – American Society for Testing and Materials

CIP – Cast In Place

Iowa DOT – Iowa Department of Transportation

LRFD – Load and Resistance Factor Design

MnDOT – Minnesota Department of Transportation

MCFT – Modified Compression Field Theory

RCB – Reinforced Concrete Box

3 Background

Before the development and release of the precast box culvert standards in 2012, the Iowa DOT allowed precast concrete box culverts as an alternate bid to CIP RCB culverts in certain limited situations, namely, for standard size single box culverts with standard size parallel wing headwalls at both ends and fill heights ranging from 2 ft. to less than 20 ft. Use of precast culverts was further limited to situations when settlement was expected to be less than 6 in. The use of precast culverts outside of the established departmental limits was approved on a case-by-case basis. Substitution of a precast box culvert was not allowed in situations where bell joints were required or installations where culverts are founded directly on bedrock.

Prior to the development of standardized designs, the Iowa DOT required the precast manufacturers to either provide barrel sections that conformed to ASTM C1433-08 Standard Specification for Precast Reinforced Concrete Monolithic Box Sections for Culverts, Storm Drains, and Sewers or have the barrel sections designed by a licensed Professional Engineer. The majority of these designs were performed using BOXCAR, a commercial software application developed specifically for the design of precast box culvert barrels and marketed through the American Concrete Pipe Association. The Iowa DOT required design calculations and shop drawings be submitted for review and approval prior to manufacturing the barrel sections.

In May 2012, the Iowa DOT initiated the development of precast box culvert standards in accordance with the AASHTO LRFD Bridge Design Specifications, 5th Edition, with Interims through 2010 (AASHTO LRFD). These standards, released in January 2013, are limited to single cell barrels and closely follow the format of the MnDOT precast box culvert standards. This document details the design process used for the development of the precast box culvert

designs. Differences in design methodology relevant to the MnDOT standards and the Iowa DOT CIP standards are also noted in this document. Design exceptions to AASHTO LRFD and ASTM C1577-11a Standard Specification for Precast Reinforced Concrete Monolithic Box Section for Culverts, Storm Drains, and Sewers Designed According to AASHTO LRFD will also be noted.

The barrels were designed using BOXCAR with additional calculations for development length and maximum reinforcing checks. End sections were designed using custom-developed Mathcad sheets and were designed to be compatible with both the Iowa DOT standard barrels and barrels conforming to ASTM C1577-11a.

4 Material Properties and Constants

Material properties and related constants are presented in Table 4-1.

Table 4-1 Material Properties

Concrete	f'_c = 5 ksi (see Note 1)
Welded Wire Fabric	f_y = 65 ksi
Reinforcing Steel	f_y = 60 ksi
Reinforced Concrete Density	0.150 kcf
Soil Fill Density	0.120 kcf
Soil Fill Friction Angle (ϕ)	30°
Water Density	0.0624 kcf
Typical Clear Cover	2 in.

Note 1:
Concrete strength may be increased to 6 ksi when needed to keep member thicknesses to 12 in. or less and to eliminate shear reinforcing.

5 Box Culvert Geometry

5.1 Box Sizes

The list of precast single box sizes (span x height) provided below correspond with the box sizes developed for the CIP single box culvert standards, with spans less than 6 ft. being excluded.

6x3, 6x4, 6x5, 6x6, 6x7, 6x8
8x4, 8x5, 8x6, 8x7, 8x8, 8x9, 8x10
10x4, 10x5, 10x6, 10x7, 10x8, 10x9, 10x10, 10x11, 10x12
12x4, 12x5, 12x6, 12x7, 12x8, 12x9, 12x10, 12x11, 12x12

5.2 Fill Height

Standard designs are provided for fill heights between 2 ft. and 25 ft. These fill heights generally follow the MnDOT precast box culvert standards except the MnDOT standards provided designs for less than 2 ft. of fill and also limit the fill height for the 12 ft. spans to 22 ft.

5.3 Member Thicknesses

The minimum floor, slab, and wall thickness for culverts with 6 ft. spans is 8.0 in. For culverts of all other spans, the minimum thicknesses are 8.0 in. for walls, 9.0 in. for the slab, and 10.0 in. for the floor. The maximum desirable thickness for any member of any culvert size is 12.0 in. If this requirement cannot be met when assuming a concrete compressive strength of f'_c = 5 ksi without the addition of shear reinforcing, a concrete compressive strength of f'_c = 6 ksi may be used.

5.4 Haunch

A haunch with dimensions of 12 in. in both the horizontal and vertical direction is used for all box sizes. This practice is consistent with the MnDOT precast box culvert standards.

5.5 Skew

The standard precast designs assume traffic is travelling parallel to the span. This assumption is considered to provide adequate designs for culverts skewed to a maximum of 45 degrees. The standard precast designs may need to be redesigned if skew angles exceed 45 degrees. Article X1.2 of ASTM C1577-11a states a separate analysis is required when the skew angle exceeds 30 degrees and the fill depth is 5 ft. or less.

6 Loads for Barrel Design

6.1 Load Factor and Load Modifier Summary

The load factors in Table 6-1 were selected from the AASHTO LRFD Tables 3.4.1-1 and 3.4.1-2. Refer to Section 8.5 for an explanation of the differing moment and shear and thrust load factors for the Strength I load combinations. According to AASHTO LRFD Art. 12.5.4, buried structures are considered non-redundant for earth fills at the strength limit state and therefore a load modifier value of η = 1.05 is applied to the Earth Horizontal and Earth Vertical loads. A load modifier value of η = 1.0 is used for all other loads. These load modifiers are consistent with AASHTO LRFD Art. 1.3.3 through 1.3.5. Load modifiers are used by BOXCAR to increase the earth loads when they contribute to the maximum force effect and the reciprocal of the load modifier is used by BOXCAR to decrease the earth loads when they do not contribute to the maximum force effect. Load modifiers were used to only increase the earth loads in the CIP box culvert designs.

Table 6-1 Load Factors (γ)

		Load Combination		
		Strength I		Service I
Load		Moment and Shear	Thrust	All Forces
DC	Max.	1.25	0.00	1.00
	Min.	0.90	0.00	
EV	Max.	1.30	0.00	1.00
	Min.	0.90	0.00	
EH	Max.	1.35	0.00	1.00
	Min.	0.90	0.00	
LL+IM	---	1.75	0.00	1.00
LS	---	1.75	0.00	1.00
WA	---	1.00	0.00	1.00

6.2 Dead Load – Self-Weight (DC)

This load accounts for the self-weight of the concrete box culvert based on a unit weight of 0.150 kcf. This load includes the slab, walls, and haunches. The self-weight of the floor is assumed to be directly resisted by the soil and therefore is not included.

BOXCAR applies the weight of the upper haunches and half of the wall weight as a point load at the top of the walls. For the CIP box culvert designs, the weight of the haunches was distributed across the slab and the weight of the walls was applied to the walls as a distributed vertical load.

6.3 Dead Load – Additional Dead Loads (DW)

No DW loads are included in the culvert design since BOXCAR does not account for the pavement weight separately from the earth fill over the culvert. The fill depth measurement used by BOXCAR includes the pavement thickness so only the difference in pavement and soil densities over the pavement thickness is actually neglected by BOXCAR. In the CIP box culvert designs, the pavement was treated as a surcharge load and the fill depth used in the calculations was measured from the underside of the pavement.

6.4 Vertical Earth Pressure (EV)

This load accounts for the fill weight and is based on fill depth, measured from the top of the roadway to the top of the culvert, and the soil unit weight. A soil-interaction factor is applied based on the provisions of AASHTO LRFD Art. 12.11.2.2 assuming an embankment installation condition. The “Embankment/Compacted” option in BOXCAR is utilized for the standard precast designs.

6.5 Horizontal Earth Pressure (EH_{Min} and EH_{Add})

This load accounts for the maximum and minimum horizontal earth pressure as described in AASHTO LRFD Art. 3.11.5.1 and Art. 3.11.7. The earth pressure assumes an at-rest condition and is calculated using an assumed angle of internal friction of 30 degrees. Minimum horizontal earth pressure is 50% of the overall earth pressure and is included in all load cases. The

additional earth pressure is the remaining 50% of the overall earth pressure and is added to the minimum earth pressure for load cases maximizing inward horizontal loads.

6.6 Water Pressure (WA)

This load accounts for water pressure pushing outward on the walls due to water inside the culvert. Water pressure is applied in load combinations minimizing horizontal inward forces. BOXCAR also adds a small downward distributed load to the floor resulting from the difference of the water weight and the resulting soil pressure distributed over the width of the culvert. The floor load was neglected in the CIP box culvert designs.

6.7 Live Load Surcharge (LS)

In BOXCAR, the live load surcharge is referred to as “Approaching Vehicle Load”. This inward horizontal pressure is applied to the walls of the box culvert and is calculated according to AASHTO LRFD Art. 3.11.6.4. An equivalent fill height is calculated by interpolation from AASHTO LRFD Table 3.11.6.4-1. The “abutment height” used to determine the pressure at the top of the wall is taken as the fill depth. For pressure at the bottom of the wall, the “abutment height” is taken as the fill depth plus the overall height of the box culvert. For “abutment heights” less than 5 ft., the equivalent fill height is taken as 4 ft.

The pressure exerted on the walls is calculated using AASHTO LRFD Eq. 3.11.6.4-1. In this equation, BOXCAR assumes a k-value of 0.33, which most closely aligns with an “active” soil condition for granular backfill. The CIP box culvert designs utilized a k-value of 0.5, which is consistent with the “at-rest” soil condition utilized for the horizontal earth pressure (EH) load case. Additionally, the resulting pressure distribution on the walls used by BOXCAR varies linearly from a maximum at the top of the walls to a minimum at the bottom. For the CIP box culvert designs, the pressure was uniform over the full height of the walls and was based on an “abutment height” measured from the roadway surface to the bottom of the floor.

6.8 Live Load (LL+IM)

Vertical live load consists of the HL-93 design truck and design tandem as defined in AASHTO LRFD Art. 3.6.1.2. BOXCAR utilizes a one-lane loaded condition and applies a 1.2 multiple presence factor as directed by AASHTO LRFD Table 3.6.1.1.2-1. It can be shown that the one lane condition governs or provides nearly the same soil pressures as multiple lane conditions for span lengths typical to single cell box culverts. The CIP box culvert designs utilized one-, two-, and three-lane loaded conditions with applicable multiple presence factors and also were checked to ensure the SU8 rating truck did not control the design.

For fill heights 2.0 ft. or greater, wheel loads are uniformly distributed over a rectangular area in accordance with AASHTO LRFD Art. 3.6.1.2.6. The length and width dimensions of the rectangular area are the tire patch dimensions increased by the product of the fill depth and live load distribution factor (LLDF). Where such areas overlap, the total load is uniformly distributed over the entire area. As specified in AASHTO LRFD Art. 3.6.1.2.5, the tire patch length (parallel to the span) is assumed to be 10 in. and the width is assumed to be 20 in. By default, BOXCAR uses 1.15 for the LLDF. The standard precast designs are based on a LLDF of 1.00 per direction from the Iowa DOT. This practice is consistent with the CIP box culvert designs. Both the MnDOT standards and ASTM C1577-11a use a LLDF of 1.15.

As specified in AASHTO LRFD Art. 3.6.1.2.6, live loads may be neglected when the fill depth is greater than 8 ft. and exceeds the length of the span. BOXCAR applies live load for all designs regardless of fill depth. This approach is considered acceptable since the effect of live loads on fill depths greater than 8 ft. is relatively small. The CIP box culvert designs neglected live load as allowed by AASHTO LRFD.

For fill heights less than 2.0 ft., the axle load is typically distributed perpendicular to the span as a line load. This condition is not applicable to the standard precast designs since the minimum fill height was 2.0 ft.

Both the design truck and design tandem are stepped across the box culvert by BOXCAR in a series of predefined load positions. These positions dictate the location of the "reference axle", which in the case of the design truck is the middle axle, and in the case of the design tandem, is the leading axle. The "reference axle" is positioned at the following locations:

- Position 1 – Centered over the left wall
- Position 2 – Distance d_e right of the inside face of the left wall
- Position 6 – Center of Span
- Position 3 through 5 – Quarter points between Position 2 to Position 6
- Position 7 through 11 – Position 1 through 5 mirrored about the center of the span

Once Position 3 through 5 are defined, BOXCAR determines which position is closest to a distance d_e from the toe of the haunch, and redefines this position to be at distance d_e from the toe of the haunch.

For the CIP box culvert designs, the design truck and design tandem were stepped across the culvert at intervals not exceeding 1.0 ft., starting with the front axle over the left wall and ending with the rear axle over the right wall. This approach provides a live load envelope similar to the approach utilized by BOXCAR.

Dynamic load allowance (IM) was calculated and applied based on the provisions of AASHTO LRFD Art. 3.6.2.2.

The soil pressure developed on the floor due to live load is modeled as a linearly varying distributed load by BOXCAR. When the live load eccentricity is less than 1/6th of the floor width, the soil pressure is distributed over the entire width of the floor. When the live load eccentricity exceeds 1/6th of the floor width, the soil pressure assumes a triangular pattern over a portion of the floor, with no soil pressure acting on the remaining portion of the floor width. By contrast, the CIP box culvert standard designs assumed negative pressure could develop on the floor with the entire floor width subjected to either positive or negative pressure.

6.9 Load Cases and Combinations

The following three (3) load cases are utilized for the standard precast designs for both the AASHTO LFRD Strength I and Service I load combinations.

- *Case A – Maximize Vertical Forces/ Maximize Horizontal Forces*

Maximize vertical and horizontal forces acting inward by applying maximum load factors and modifiers to DC, DW, EV, and EH_{Min} and EH_{Add}. Include all loads except WA.

- *Case B – Maximize Vertical Forces / Minimize Horizontal Forces*
  Maximize vertical forces by applying maximum load factors and modifiers to DC and EV and including LL+IM. Minimize horizontal forces acting inward by applying minimum load factors and modifiers to EH_{Min}, including WA, and neglect EH_{Add} and LS.

- *Case C – Minimize Vertical Forces / Maximize Horizontal Forces*
  Minimize vertical forces by applying minimum load factors and modifiers to DC, EV and neglecting LL+IM. Maximize horizontal forces acting inward by applying maximum load factors and modifiers to EH_{Min} and EH_{Add}, including LS and neglecting WA.

Using the load factor and modifier values presented in Table 6-1, the general equations of each load case are as follows:

- Strength I - Case A
  $Q = 1.25 \cdot DC + 1.365 \cdot EV + 1.418 \cdot EH_{Min} + 1.418 \cdot EH_{Add} + 1.75 \cdot (LL + IM) + 1.75 \cdot LS$

- Strength I - Case B
  $Q = 1.25 \cdot DC + 1.365 \cdot EV + 0.857 \cdot EH_{Min} + 1.75 \cdot (LL + IM) + 1.00 \cdot WA$

- Strength I - Case C
  $Q = 0.90 \cdot DC + 0.857 \cdot EV + 1.418 \cdot EH_{Min} + 1.418 \cdot EH_{Add} + 1.75 \cdot LS$

- Service I - Case A
  $Q = 1.0 \cdot DC + 1.0 \cdot EV + 1.0 \cdot EH_{Min} + 1.0 \cdot EH_{Add} + 1.0 \cdot (LL + IM) + 1.0 \cdot LS$

- Service I - Case B
  $Q = 1.0 \cdot DC + 1.0 \cdot EV + 1.0 \cdot EH_{Min} + 1.0 \cdot (LL + IM) + 1.0 \cdot WA$

- Service I - Case C
  $Q = 1.0 \cdot DC + 1.0 \cdot EV + 1.0 \cdot EH_{Min} + 1.0 \cdot EH_{Add} + 1.0 \cdot LS$

Note the Strength I equations are relevant for only the moment and shear forces. Thrust at the strength-level was neglected for the standard precast designs.

7 Structural Analysis of Barrels

A 1.0 ft. wide strip of the culvert is modeled as a plane frame model with beam elements representing the slab, floor, and walls. Elements are taken along the centerline of each member and cross-sectional properties are derived from the member thickness and 12 in. The model is supported at one of the lower corners by a pinned support, restricting movement in the x- and y-directions, and a roller support in the opposite lower corner, restricting the movement in the y-direction only.

BOXCAR accounts for the increased stiffness of the haunches in the internal structural model. The haunch stiffening effect was ignored in the development of the CIP box culvert designs.

BOXCAR generally accounts for distributed loads applied beyond the centerline of the members by adding a point load to the node equal to the product of the distributed load magnitude at the node and half of the adjacent member thickness. For instance, for the EV load, a downward acting point load equal to the product of the distributed load acting on the slab and half of the wall thickness is applied to each end of the slab. The point loads are neglected though when determining the resulting soil pressure on the floor. Vertical point loads are not applied to the ends of the floor since these loads would be directly resisted by the supports. The CIP box culvert designs generally neglected any loads applied beyond the centerlines of the members.

BOXCAR considers moments that produce tension on the inside face of the walls, slab, and floor as positive moments and compressive axial forces are considered as positive thrusts. This sign convention will be used in this document when discussing moments and thrusts.

The haunch has a corner stiffening effect that is accounted for in the structural model used by BOXCAR. This stiffening effect results in higher moments in the box corners and lower moments at midspan of the members when compared to a model where the stiffening effect is neglected. The relative change in moment magnitude is reduced as the span and height of the barrel is increased. The stiffening effect was neglected for the CIP standard box culvert designs.

8 Barrel Design

8.1 Resistance Factors

Resistance factors for precast box culverts are specified in AASHTO Table 12.5.5-1 and equal 1.0 for flexure and 0.9 for shear. These values are slightly higher than the values presented in the same table for CIP box culverts and used in the development of the CIP box culvert designs (0.9 for flexure and 0.85 for shear).

8.2 Reinforcing Layout

Precast box culverts are generally reinforced with welded wire fabric composed of varying wire sizes and spacings. BOXCAR provides the required area of reinforcing on a per foot basis at various locations in the culvert. The naming convention used by BOXCAR to label the reinforcing at various locations follows the convention used by ASTM C1577-11a and are described as follows:

- As1 – The area of steel As1 is located in the outside face of the walls and continues into the outside face of the slab and floor. This reinforcing resists negative moments in the walls, slab, and floor and terminates in the slab and floor when it is no longer required for flexural strength.

- As2 – The area of steel As2 is located on the inside face of the slab and resists positive moments in the slab.

- As3 – The area of steel As3 is located on the inside face of the floor and resists positive moments in the floor.

- As4 – The area of steel As4 is located on the inside face of the walls and resists positive moments in the walls.

- As5 and As6 – These areas of steel As5 and As6 are the longitudinal reinforcing located in the outside and inside faces respectively. For fill heights 2 ft. or greater, these areas need to only satisfy minimum reinforcing requirements.

- As7 – The area of steel As7 is located near the center of the outside face of the slab and laps with the As1 steel. Since negative moments quickly dissipate inward from the corners, the As7 steel is typically controlled by minimum reinforcing requirements.

- As8 – The area of steel As8 is located near the center of the outside face of the floor and laps with the As1 steel. Since negative moments quickly dissipate inward from the corners, the As8 steel is typically controlled by minimum reinforcing requirements.

The precast box culvert standards also require reinforcing to be placed in the haunches. The nominal haunch reinforcing consists of #3 transverse bars spaced at 12 in. on center. A diagram showing the locations of the various reinforcing designations as well as the variable dimension designations used in the precast box culvert standards is presented in Figure 8-1.

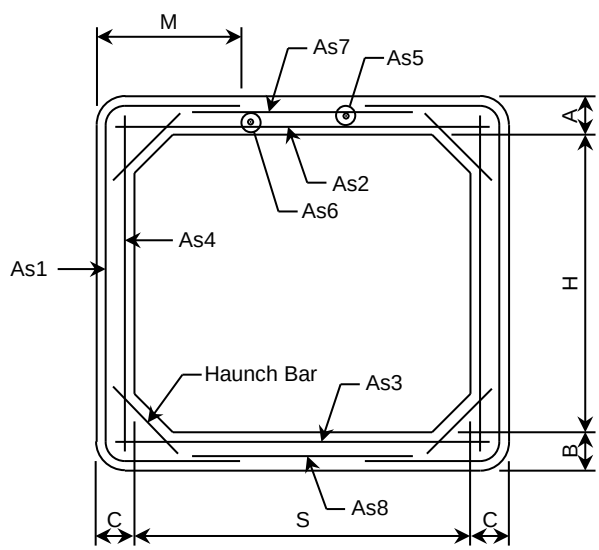

Figure 8-1 Typical Barrel Cross Section

8.3 Critical Sections

BOXCAR determines the required reinforcing area and checks shear capacity at a number of critical sections. The required areas of reinforcing are typically controlled by a few significant critical sections. For the A_{s1} reinforcing, the controlling critical sections are typically located at

the toe of the haunch in the slabs, floor, and walls. Sections at the inside faces of these members are also evaluated by including the haunch depth in the structural section. For the remaining areas of reinforcing, the controlling critical sections are typically at or near the midspan of each member.

Controlling critical sections for shear capacity are typically located a distance d from the toe of the haunches. BOXCAR assumes the distance d is equal to d_e, the effective depth for a flexural design. This is a slight deviation from AASHTO LRFD Art. 5.8.3.2 which requires the critical section be taken at a distance d_v from the support (toe of the haunch). The dimension d_v is defined in AASHTO LRFD Art. 5.8.2.9 and can be smaller than d_e. When d_v is less than d_e, the critical section used to evaluate shear capacity in BOXCAR is slightly farther from the member end than required by AASHTO LRFD. This leads to slightly smaller shear forces used to evaluate shear capacity. The basis for the approach used by BOXCAR likely is related to the fact that BOXCAR places a live load axle at the shear critical section and d_v cannot be accurately calculated until after the required flexural reinforcing is calculated. While not technically accurate, the approach used by BOXCAR is considered acceptable since the difference in critical section location is relatively small.

8.4 Reinforcing Wire Diameter and Maximum Spacing

BOXCAR allows the reinforcing wire diameter and maximum spacing to be assigned by the user. The wire diameter is used in effective depth calculations and the maximum spacing is used to determine the reinforcing area required to satisfy crack control provisions. These values must be assumed since the actual wire diameters and spacings are determined by the precast manufacturer. Based on MnDOT studies, the maximum anticipated primary wire size is a W23, which has a diameter of 0.541 in., and it was assumed the transversed tie wire area will be 40% of the primary wire area. It was also assumed a maximum of two layers of reinforcing may be used. Thus, the maximum effective wire diameter is 1.4 in. Minimum wire spacing is 2 in., and thus the assumed maximum reinforcing area per foot is approximately 2.75 in^2. To provide for some optimization of the design, MnDOT varied the effective wire diameter with the required reinforcing area. These values are presented in Table 8-1.

Table 8-1 Effective Wire Diameter

Area of Steel (A_s)	Effective Diameter
$< 1.44\ in^2$	1.0 in.
$1.44\ in^2 < A_s < 2.00\ in^2$	1.2 in.
$2.00\ in^2 < A_s < 2.75\ in^2$	1.4 in.

An iterative design approach is required to utilize the varying wire diameters. Initial designs are run using the smallest effective diameter. If the required reinforcing area is higher than the corresponding area provided in Table 8-1, the effective wire diameter is increased to correlate with the required reinforcing area. The design is repeated until the required reinforcing area is within the range for the effective wire diameter used in the design.

The maximum wire spacing is assumed to be 4 in.

8.5 Strength-Level Flexural Reinforcing Requirements

The area of reinforcing required to satisfy the strength limit state is determined by BOXCAR using AASHTO LRFD Eq. 12.10.4.2.4a-1 from the section pertaining to reinforced concrete pipe culverts. This equation is a function of both the factored moment and factored thrust and directly provides the required area of reinforcing needed to resist both moment and thrust.

BOXCAR allows the user to assign strength-level load factors specific to the thrust forces. By default, BOXCAR uses a load factor of 1.0 for the thrust forces. In AASHTO LRFD Eq. 12.10.4.2.4a-1, an increase in the thrust force results in a decrease in required reinforcing area. By using a lower load factor on the thrust force, the contribution of the thrust effect on the section capacity is reduced. The MnDOT standards conservatively ignored the thrust load at strength-level by assigning a value of 0 to the strength-level thrust load factors. The Iowa DOT has adopted this practice for the development of their standard precast designs.

When the thrust force terms are removed from AASHTO LRFD Eq. 12.10.4.2.4a-1, this equation can be algebraically reconfigured to match the conventional reinforced concrete beam equations presented in AASHTO LRFD Art. 5.7.3. Therefore, the design methodology for the slab and floor is consistent with the design of these elements in the CIP box culvert standards. The design of the walls differs though in that the CIP box culvert standard walls were designed as eccentrically loaded columns whereas the precast box culvert standard walls are designed as beams with no axial load.

8.6 Crack Control Requirement

BOXCAR determines the reinforcing area required to satisfy the crack control provisions presented in AASHTO LRFD Art. 5.7.3.4. BOXCAR uses AASHTO LRFD Eq. C12.11.3-1 to determine the service-level reinforcing stress based on the service-level moment and thrust present at the section being investigated. By default, BOXCAR limits the service-level reinforcing stress to 100% of the yield stress. The MnDOT standards limited the service-level reinforcing stress to 60% of the yield stress, which correlates with the limit assigned by Art. 8.16.8.4 of the AASHTO Standard Specifications. The Iowa DOT standard precast designs adopted the 60% limit used on the MnDOT standards. No limit on service load stress was imposed on the CIP box culvert standard designs. The contribution of thrust is accounted for in the crack control calculations for the MnDOT standards and the Iowa DOT precast and CIP box culvert standards.

BOXCAR assumes a Class 2 exposure factor, which correlates with a severe exposure condition. A Class 2 exposure factor was used in the MnDOT standards. Similarly, the Iowa DOT precast box culvert standards also use a Class 2 exposure factor. The CIP box culvert standards use a Class 1 exposure factor except for slabs in 0 ft. fill situations. The exposure class used in the ASTM C1577-11a is not explicitly stated in the standards, but is assumed to be Class 1.

8.7 Minimum Reinforcing Requirements

BOXCAR provides a minimum transverse reinforcing area of 0.2% of the gross concrete area, as required by AASHTO LRFD Art. 12.11.4.3.2. A minimum amount of longitudinal reinforcing is not required per AASHTO LRFD Art. 12.11.4.3.2 since the precast segment lengths are

assumed to be less than 16 ft. However, consistent with the MnDOT standards, the minimum amount of longitudinal reinforcing in both the inner and outer reinforcing mats is set at 0.06 in.^{2}/ft. This area is calculated from AASHTO LRFD Eq. 5.10.8-1 assuming the maximum member thickness, 12 in. The CIP box culvert standards refer to AASHTO LRFD Art. 12.11.4.3.1 when calculating minimum reinforcing requirements.

8.8 Maximum Reinforcing Requirements

BOXCAR limits the maximum reinforcing area according to AASHTO LRFD Eq. 12.10.4.2.4c-2. Although this equation relates to reinforced concrete pipe, it can be shown through algebraic manipulation that this equation limits the reinforcing area to 75% of the balanced steel ratio (ρ_b), which is the limit used in the MnDOT standards. Reinforcing area for the standard precast designs was further limited by the Iowa DOT to ensure the section would remain "tension-controlled", as described in AASHTO LRFD Art. 5.5.4.2.1. It can be shown that limiting the reinforcing area to 63.4% of ρ_b satisfies the minimum strain limit of 0.005 per AASHTO LRFD C5.5.4.2.1-1. The Iowa DOT also limited the total transverse reinforcing in the walls to 4% of the gross area to be consistent with the CIP box culvert designs.

8.9 Shear Capacity

Shear capacity for the slab and floor differs depending on whether the fill depth is greater than or less than 2 ft. Since the minimum fill depth provided in the standard precast designs is 2 ft., the shear capacity of the slab and floor were calculated using AASHTO LRFD Eq. 5.14.5.3-1. Both the simplified procedure and general procedure described in AASHTO LRFD Art. 5.8.3.4.1 and Art. 5.8.3.4.2, respectively, were used in determining the shear capacity for the walls. In the general procedure, BOXCAR assumes a maximum aggregate size of 0.75 in. Also, the contribution of the thrust was neglected for the general procedure. The procedure providing the largest β factor was used in AASHTO LRFD Eq. 5.8.3.3-3 to ultimately determine the wall shear capacity.

The standard precast designs limit the maximum member thickness to 12 in. and do not include shear reinforcing. Thus, the member thicknesses were increased from the minimum thicknesses when the concrete shear capacity was inadequate. If the 12 in. member thickness limit was reached, the concrete strength was increased to 6 ksi.

8.10 Development of Welded Wire Reinforcing

BOXCAR does not calculate the development length for the As1 reinforcement or the lap length for the As1 and As7/8 reinforcement and thus additional hand calculations were necessary to determine the necessary embedment of the As1 reinforcement into the slab and floor, henceforth referred to the "M" dimension.

The "M" dimension is composed of several lengths, as shown in Figure 8-2. These lengths are as follows:

- Length "1" is provided by BOXCAR and is determined by the location where the As1 reinforcing is no longer required and moment in the slab and floor can be resisted by the As7 and As8 reinforcing, respectively. The greater of these distances is used to calculate the "M" dimension, which will be applied to the reinforcement in both members.

- Length “2” is added to correct for internal rounding procedures used by BOXCAR and is set equal to 6 in.
- Length “3” is taken as the greater of the calculated development length of the As1 reinforcing or the calculated lap length of the As7/8 reinforcing. Hand calculations use AASHTO LRFD Eq. 5.11.2.5.2 to determine the development length of the As1 reinforcing. This equation is for plain wire fabric and provides a conservative length when deformed wire fabric is used by the fabricator. The maximum allowed wire spacing, 4 in., is used with the As1 area to determine the individual wire area term, A_w, in AASHTO LRFD Eq. 5.11.2.5.2. Lap length for the As7/8 reinforcing is calculated per AASHTO LRFD Art. 5.11.6.2, which again relates to plain wire fabric and provides a conservative length when deformed wire fabric is used. The maximum allowed cross wire spacing, 8 in., is used for the lap length calculations.
- The design clear cover, 2 in.

A minimum “M” dimension is based on the MnDOT standards and is taken as 32 in. for the 6 ft. spans and 34 in. for all other spans.

The overall length of the As7/8 reinforcing is determined by subtracting two times the sum of Length “1”, Length “2”, and the 2 in. design clear cover from the overall width of the barrel section.

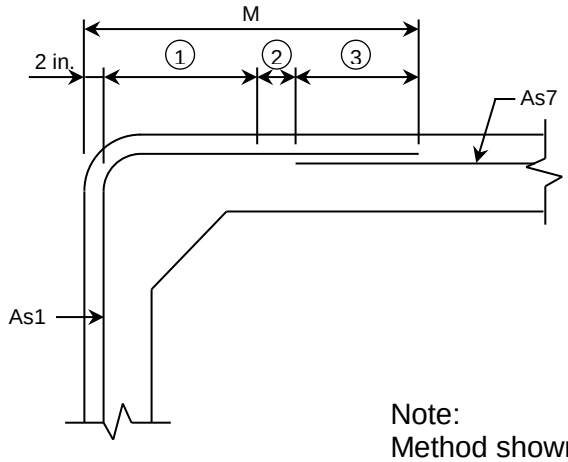

① As1 extension provided by BOXCAR

② 6 in.

③ Greater of development length for As1 or the lap splice length for As7

Note:
Method shown also applies to As1 and As8 lap length in floor.

Figure 8-2 Composition of Dimension "M"

9 Adjustments to BOXCAR Default Settings for Barrel Design

The standard precast designs are based on the following adjustments to the BOXCAR default settings:

- Set “Axial Thrust Load Factor” value on Page 2 to “0”
- On page 2, initially set all “Diameter” values to “1.0 in”
- Set all “Clear Concrete Cover” dimensions of Page 3 to “2 in.”
- Change Total Service Stress Limit on Page 3 from 100 to 60.

- Set “Live Load Distribution Factor (LLDF)” on Page 4 to “User Specified” with a value of “1.0”
- Set “Fluid Unit Weight” on Page 4 to 62.4 pcf

10 Loads for End Section Design

Loads placed on the end sections are generally consistent with the barrel design loads presented in Chapter 6, and will be further discussed in the following sections.

10.1 Load Factors and Load Modifiers

The load factors and load modifiers for the end section wall and floor design adhere to the barrel design load factors and modifiers presented in Section 6.1. Live load placement on the parapet is considered an extreme event by the Iowa DOT and utilizes a live load factor of 1.0. The DC load factor for the parapet design is 1.25, per AASHTO LRFD Table 3.4.1-2.

10.2 Dead Load – Self-Weight (DC)

The self-weight of the parapet is accounted for in the design of the parapet. Soil pressure acting on the floor due to self-weight of the walls and haunch is included in the floor design. The crack-control check in the walls accounts for the self-weight of the walls. For dead load calculations, the haunch is assumed to be 12 inches tall and 12 inches wide.

10.3 Dead Load – Additional Dead Loads (DW)

No additional dead loads are applied to the end sections.

10.4 Vertical Earth Pressure (EV)

Vertical earth pressure acting on the lintel beam is accounted for in the Type 1 slab design and Type 3 lintel beam design. Vertical earth pressure does not influence the end section wall or floor design.

10.5 Horizontal Earth Pressure (EH_{Min} and EH_{Add})

Horizontal earth pressure acting on the end section walls is identical to the horizontal earth pressure placed on the barrels and is described in Section 6.5.

10.6 Water Pressure (WA)

Water pressure acting on the end section walls and floor is accounted for in a manner identical to the barrel design as presented in Section 6.6.

10.7 Live Load Surcharge (LS)

The end sections are assumed to be beyond the live load surcharge zone of influence and thus no live load surcharge is applied to the end sections.

10.8 Live load (LL+IM)

Live load is placed on the culvert end sections to account for an extreme event condition. Based on Iowa DOT guidelines, the live load consists of a single 16 kip wheel load and a multiple presence factor of 1.2. Dynamic load allowance is taken as 0.33. The wheel load is placed at midspan for design of the flexural reinforcing and at a distance d_v from the inside face of the wall for verification of shear capacity.

10.9 Load Combinations

Load combinations are specific to each element of the end section and are configured to create a maximum force effect in that element. These combinations are defined below.

- *Case A - Design of AH Steel in Walls*
  The AH reinforcing steel is flexural reinforcing in the outside face of the walls. To maximize the moments inducing tension in this steel, horizontal earth pressure on the walls is maximized by applying both EH_{Min} and EH_{Add} and the WA load is neglected. The DC loads are also applied. This load combination is also used to design the reinforcing steel on the inside face of the walls by assuming the wall acts as a propped cantilever at the barrel connection.

- *Case B - Design of AH Steel in Floor*
  The AH reinforcing steel is also the flexural reinforcing in the bottom of the floor. To maximize the moments inducing tension in this steel, horizontal earth pressure on the walls is maximized by applying both EH_{Min} and EH_{Add} and the WA load is neglected. The DC loads inducing soil pressure on the floor are minimized.

- *Case C – Design of As3 Steel in Floor*
  The As3 reinforcing steel is the flexural reinforcing in the top of the floor. To maximize the moments inducing tension in this steel, the horizontal earth pressure on the walls is minimized by only applying EH_{Min}, and the WA load is applied. The DC loads inducing soil pressure on the floor are maximized.

- *Case D – Parapet, Lintel, A_t, and A_b Design*
  As previously discussed, LL+IM is applied to the parapet of both end section types, the lintel beam for the Type 3 end section, and the slab for the Type 1 end section in an extreme event condition. The DC and EV loads for the parapet are also included in this load combination.

Using the load factor and modifier values presented in Table 6-1, the general equations of each load case are as follows:

- Strength I - Case A
  $Q = 1.25 \cdot DC + 1.418 \cdot EH_{Min} + 1.418 \cdot EH_{Add}$

- Strength I - Case B
  $Q = 0.90 \cdot DC + 1.418 \cdot EH_{Min} + 1.418 \cdot EH_{Add}$

- Strength I - Case C
  $Q = 1.25 \cdot DC + 0.857 \cdot EH_{Min} + 1.00 \cdot WA$

- Strength I - Case D
  $Q = 1.25 \cdot DC + 1.00 \cdot (LL + IM)$

- Service I - Case A
  $Q = 1.0 \cdot DC + 1.0 \cdot EH_{Min} + 1.0 \cdot EH_{Add}$

- Service I - Case B
  $Q = 1.0 \cdot DC + 1.0 \cdot EH_{Min} + 1.0 \cdot EH_{Add}$

- Service I - Case C
  $Q = 1.0 \cdot DC + 1.0 \cdot EH_{Min} + 1.0 \cdot WA$

- Service I - Case D
  $Q = 1.25 \cdot DC + 1.30 \cdot EV + 1.0 \cdot (LL + IM)$

Note the Strength I equations are relevant for only the moment and shear forces. Thrust at the strength-level was neglected for the standard end section designs.

10.10 Comparison to CIP Headwall Standards

The component loads and load combinations selected for design of the precast end sections are consistent with the precast barrel design methodology but differ from the component loads and load combinations used for the development CIP parallel wing headwalls (PWHs). In general, the PWHs designs applied hydrostatic pressure on the outside of the headwall assuming a saturated soil condition and neglected hydrostatic pressure acting on the inside of the headwall. The four (4) load combinations used in the design of the PWHs are presented below:

- Load Combination 1 assumed minimal dry soil (γ = 0.120 pcf) pressure on the walls and maximum DC loads. This combination was intended to maximize tension in the top of the floor.
- Load Combination 2 assumed minimal saturated soil (γ = 0.135 pcf) pressure on the walls, maximum DC loads, and hydrostatic pressure outside the headwall. The effective unit weight of the soil was used and the hydrostatic pressure acted inward on the walls and upward on the floor. This combination was also intended to maximize tension in the top of the floor.
- Load Combination 3 assumed maximum saturated soil pressure on the walls and minimum DC loads. This combination was intended to maximize tension in the bottom of the floor.
- Load Combination 4 assumed maximum saturated soil pressure on the walls, maximum DC loads, and hydrostatic pressure outside the headwall. This combination was intended to maximize tension on the inside face of the walls when the walls were modeled as a propped cantilever and outside face when the walls were modeled as free cantilevers.

Including hydrostatic pressure on the outside of the headwalls but not on inside of the headwall would represent a rapid drawdown of flood waters that had remained at flood stage long enough to raise the water table to near the top of the barrel. While using this load combination in the precast headwall standards would have resulted in higher AH steel areas, it was deemed unnecessary since this case is not specified by AASHTO LRFD for the barrel design and the

likelihood of this condition developing is very small. Joints between precast end section segments also tend to facilitate drainage of water in the fill material thus further reducing the likelihood of hydrostatic pressure developing on the outside of the headwalls. Additionally, the AH steel areas determined from the load cases presented in Section 10.9 correlated with the areas presented in the MnDOT precast end section details.

11 Structural Analysis of End Sections

The structural analysis methods vary with each element in the end section and are presented in detail in the following sections. Haunch dimensions for determining the critical section location are consistent with the haunch dimensions provided in ASTM C1577-11a since these dimensions are typically smaller than the standard 12 inch haunch used in the Iowa DOT and MnDOT standards. This approach leads to a conservative design for the end sections mated with Iowa DOT and MnDOT standard barrels.

11.1 Design Model for AH Steel In Walls

The Type 3 end section walls are modeled as a cantilever with the fixed base located at the toe of the haunch. The second precast segment from the end of the barrel is considered the critical segment for the design of the AH steel in the walls for both the first and second precast segments since the first precast segment is assumed to function as a propped cantilever. The design height of the wall is conservatively taken as the maximum segment height. The wall is modeled as a 12 in. wide strip. The AH steel in the walls and floors of the first segment of a Type 1 end section is taken from the design of a Type 3 section of equivalent height.

11.2 Design Model for AH Steel in Floor

In a manner consistent with the barrel design, the end section is assumed to have pinned supports located at the bottom of each wall. Similar to the model presented in Section 11.1, the second precast segment from the end of the barrel is considered as the critical segment for design of the AH steel in the floor for both the first and second precast segments and the design wall height is taken as the maximum segment height. The wall and floor are modeled as 12 in. wide strips. As stated in Section 11.1, the AH steel in the walls and floors of the first segment of a Type 1 end section is taken from the design of a Type 3 section of equivalent height.

11.3 Design Model for As3 Steel in Floor

The model for the As3 reinforcing steel in the floor is identical to the model presented in Section 11.2.

11.4 Design Model Steel on Inside Face of Wall

To generate moments that cause tension in the inside face reinforcing, the wall is modeled as a propped cantilever with a pin support at the top of the wall and a fixed support at the centerline of the floor. This model only applies to the first precast segment from the end of the barrel. Wall height is taken as the rise of the connecting barrel. The wall is modeled as a 12 in. wide strip. This method applies to design of inside face reinforcing for both Type 1 and Type 3 end sections.

11.5 Design Model for Ab Steel in the Slab of Type 1 End Sections

For the design of tension reinforcing for the bottom face of the slab portion of Type 1 end sections, the slab is assumed to act as a simple span. The slab directly supports the dead load of the parapet and the vertical earth load. The live load described in Section 10.8 is distributed proportionally between the slab section and the parapet based on each member's moment of inertia.

11.6 Design Model for A_t Steel in the Slab of Type 1 End Sections

For the design of tension reinforcing for the top face of the slab portion of Type 1 end sections, the slab is assumed to act as a span fixed at both ends. The slab is assumed to directly support the dead load of the parapet, the vertical earth load, and a portion of the live load as described in Section 11.5.

11.7 Parapet and Lintel Beam Design Model

The parapet and lintel beams are designed as a simply supported beam with supports located at the centerline of the walls. The models used for Type 1 and Type 3 parapet design are described below:

- The dead load of the parapet is assumed to be directly supported by the end section slab. As stated in Section 11.5, the live load is distributed between the parapet and the end section slab proportionally based on each member's moment of inertia.
- Parapets of Type 3 end sections at 0° skew are designed to carry the dead load of both the parapet and the lintel beam, the total vertical earth load, and the total live load.
- For skewed Type 3 end sections, the 2'-6 wide portion of non-skewed lintel beam is designed for the moment caused by 50% of the total lintel beam dead load and vertical earth load, with the span taken perpendicular to the barrel centerline. The lintel beam is also designed for the moment generated by 100% of the live load distributed across the 2'-6 beam width. The parapet of a skewed Type 3 end section is designed for the moment from the parapet dead load, as well as moment caused by the remaining 50% of lintel beam dead load and vertical earth load. The live load for the Type 3 parapet is applied to the parapet, with the span taken along the skew.

12 End Section Design

12.1 Resistance Factors

Resistance factors for the end section design are identical to the resistance factors used for the barrel design as presented in Section 8.1.

12.2 Type 3 Reinforcing Layout

Similar to the barrels, the Type 3 end sections are designed for welded wire fabric reinforcing. The naming convention for reinforcing in various sections follows the convention used in the existing Iowa DOT precast end sections and is defined as follows:

- AH – The area of steel AH is located in the outside face of the walls and the bottom face of the floor.

- As3 – The area of steel As3 is located in the top face of the floor.

- As4 - The area of steel As4 is located on the inside face of the walls.

Similar to the barrel sections, the end section haunch reinforcing consists of #3 transverse bars spaced at 12 in. on center. A diagram showing the locations of the various reinforcing designations for the Type 3 precast end section standards is presented in Figure 12-1.

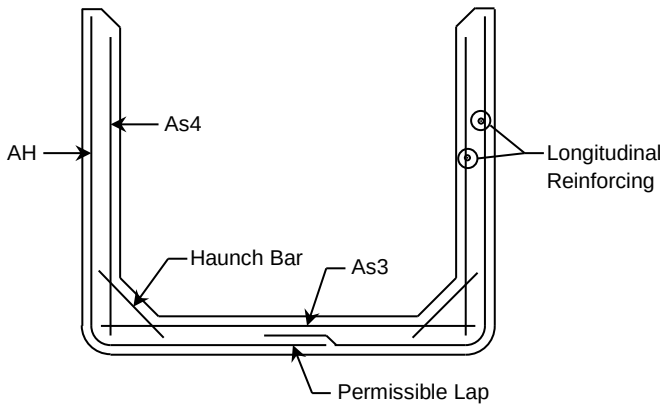

Figure 12-1 Type 3 End Section Reinforcing Layout

12.3 Type 1 Reinforcing Layout

The Type 1 end sections are designed for welded wire fabric reinforcing. The reinforcing for the walls and floor of the first two feet of the precast segment adjacent to the barrel is taken from the design of a Type 3 end section of equivalent height. The remaining sections of a Type 1 end section are identical to that of an equivalent Type 3 end section. The reinforcing for the slab and top half of the walls of a Type 1 end section are defined as follows:

- A_t – Area of steel A_t is located on the outside face of the slab, and continues into the outside face of the walls.

- A_b – Area of steel A_b is located on the inside face of the slab.

- AH, As3, and As4 – These areas of steel are similar to the Type 3 end section areas and are described in Section 12.2.

A diagram showing the locations of the various reinforcing designations for the first two feet of Type 1 precast end section adjacent to the barrel is presented in Figure 12-2 Type 1 End Section Reinforcing Layout.

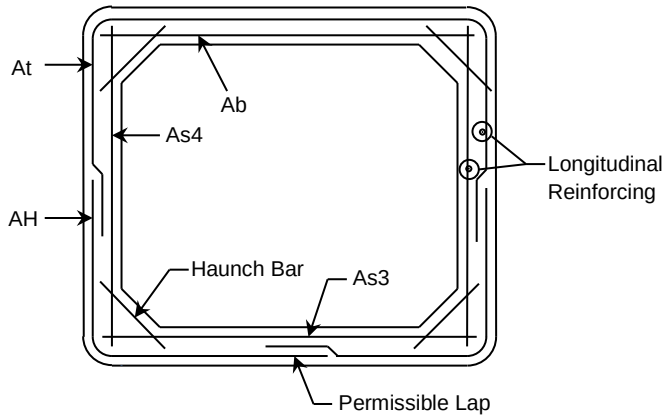

Figure 12-2 Type 1 End Section Reinforcing Layout

12.4 Critical Sections

Critical sections for flexural design are located at the toe of the haunch in the floor and wall for the AH reinforcing and at midspan of the floor for the As3 reinforcing. For the reinforcing on the inside face of the wall, the critical section is located at the point of maximum moment. The critical sections for A_t reinforcing are located at the toe of the haunches and the critical section for A_b reinforcing is located at midspan of the slab. Critical sections for shear capacity are a distance d_v from the toe of the haunch in the floor, walls, and slab.

12.5 Reinforcing Wire Diameter and Maximum Spacing

Assumptions for effective reinforcing diameter are identical to the assumptions applied for the barrel designs and are described in Section 8.4. The maximum assumed wire spacing is also consistent with the barrel design and is assumed to be 4 in.

12.6 Strength-Level Flexural Reinforcing Requirements

The area of reinforcing required to satisfy the strength limit state is determined using AASHTO LRFD Eq. 5.7.3.2.2-1 whereas the barrels were designed using AASHTO LRFD Eq. 12.10.4.2.4a-1. While these two equations appear very different, once the thrust force term is removed from the latter equation, it can be algebraically reconfigured to match the former equation. Hence, the strength-level flexural design requirements for the end sections are identical to the barrel designs.

12.7 Crack Control Requirement

Similar to the barrel designs, the end section designs determine the minimum reinforcing area required to satisfy the crack control per AASHTO LRFD Art. 5.7.3.4 using the Class 2 exposure factor and 60% steel stress limit.

12.8 Minimum Reinforcing Requirements

Minimum transverse reinforcing for the end section designs is 0.2% of the gross concrete area, as required by AASHTO LRFD Art. 12.11.4.3.2. Minimum longitudinal reinforcing is set at 0.06 in.^{2}/ft. following the same methodology used for the barrel designs as discussed in Section 8.7.

12.9 Maximum Reinforcing Requirements

Maximum reinforcing for the end section designs is limited to 63.4% of ρ_b to ensure the section remains “tension-controlled”. The same limit was applied to the barrel designs and the basis of this limit is described in Section 8.8.

12.10 Shear Capacity

Shear capacity for the end section walls and floor is calculated per the simplified procedure presented in AASHTO LRFD Art. 5.8.3.4.1. In the case of the end sections, adequate results are provided by the simplified procedure and thus the more complex general procedure was not employed in the end section design.