TABLE OF CONTENTS ~ PIERS

6.6 Piers
- 6.6.1 General
  - 6.6.1.1 Policy overview
    - 6.6.1.1.1 Frame pier
    - 6.6.1.1.2 T-pier
    - 6.6.1.1.3 Pile bent
    - 6.6.1.1.4 Diaphragm pier
  - 6.6.1.2 Design information
  - 6.6.1.3 Definitions
  - 6.6.1.4 Abbreviations and notation
  - 6.6.1.5 References
- 6.6.2 Loads
  - 6.6.2.1 Dead
  - 6.6.2.2 Live
  - 6.6.2.3 Dynamic load allowance
  - 6.6.2.4 Centrifugal force
  - 6.6.2.5 Braking force
  - 6.6.2.6 Vehicular collision force
  - 6.6.2.7 Water
  - 6.6.2.8 Wind
    - 6.6.2.8.1 Horizontal pressure on superstructure
    - 6.6.2.8.2 Horizontal pressure on substructure
    - 6.6.2.8.3 Vehicles on superstructure
    - 6.6.2.8.4 Vertical pressure on superstructure
  - 6.6.2.9 Ice
  - 6.6.2.10 Earthquake
  - 6.6.2.11 Earth pressure
  - 6.6.2.12 Uniform temperature
    - 6.6.2.12.1 General
    - 6.6.2.12.2 Design temperature changes
    - 6.6.2.12.3 Out-of-plane forces
    - 6.6.2.12.4 Unbalanced forces
      - 6.6.2.12.4.1 Bridges with integral abutments
      - 6.6.2.12.4.2 Bridges with stub abutments
    - 6.6.2.12.5 Skewed pier forces
    - 6.6.2.12.6 In-plane forces
  - 6.6.2.13 Temperature gradient
  - 6.6.2.14 Shrinkage
  - 6.6.2.15 Creep
  - 6.6.2.16 Locked-in force
  - 6.6.2.17 Settlement
  - 6.6.2.18 Friction
    - 6.6.2.18.1 Out-of-plane forces
    - 6.6.2.18.2 Unbalanced forces
      - 6.6.2.18.2.1 Bridges with integral abutments
      - 6.6.2.18.2.2 Bridges with stub abutments
    - 6.6.2.18.3 Skewed pier forces
  - 6.6.2.19 Vessel collision
- 6.6.3 Load application to structure
  - 6.6.3.1 Load modifier
  - 6.6.3.2 Limit states
  - 6.6.3.3 Longitudinal and transverse forces transmitted through bearings
    - 6.6.3.3.1 Elastomeric bearings
    - 6.6.3.3.2 Fixed bearings and keyed-in concrete diaphragms

6.6.3.3.3 Friction-acting bearings
6.6.3.4 Longitudinal and transverse forces for non-skewed piers
6.6.3.5 Parallel and perpendicular forces for skewed piers
6.6.4 Pier components and details
6.6.4.1 Frame piers and T-piers
6.6.4.1.1 Pier cap
6.6.4.1.1.1 Analysis and design
6.6.4.1.1.2 Detailing
6.6.4.1.2 Pier column
6.6.4.1.2.1 Analysis and design
6.6.4.1.2.2 Detailing
6.6.4.1.3 Pier footing
6.6.4.1.3.1 Analysis and design
6.6.4.1.3.2 Detailing
6.6.4.1.4 Seal coat
6.6.4.1.4.1 Analysis and design
6.6.4.1.4.2 Detailing
6.6.4.2 Pile bents and diaphragm piers
6.6.4.2.1 Analysis and design
6.6.4.2.1.1 Steel H-piles
6.6.4.2.1.2 Prestressed concrete piles
6.6.4.2.1.3 Concrete-filled steel pipe piles
6.6.4.2.2 Detailing

6.6 Piers

6.6.1 General

This series of articles on pier design is based on the AASHTO LRFD Specifications. The series replaces three previous Office of Bridges and Structures documents: *Design Criteria for Piers 1979*, *Design Criteria for Piers (Metric Version) 1996,* and the previous Bridge Design Manual piers section based on the AASHTO Standard Specifications.

6.6.1.1 Policy overview

For typical pretensioned prestressed concrete beam (PPCB) or continuous welded plate girder (CWPG) road overpasses without special aesthetic requirements, the office usually selects frame piers because of low construction cost. For PPCB or CWPG bridges over streams and rivers, the office prefers T-piers to minimize potential damage from floating debris and flooding. T-piers also are the preferred choice for conditions where vehicle or railway collision or aesthetics are a design issue. Pile bents are the usual choice for short span continuous concrete slab (CCS), PPCB, or rolled steel beam (RSB) bridges.

For typical superstructure to pier connections the office prefers an integral diaphragm or low profile fixed bearings, provided that a fixed connection will not subject a pier to excessive longitudinal forces. If longitudinal forces from a fixed connection are excessive the designer has the option of using expansion bearings, preferably steel reinforced elastomeric bearings.

Longitudinal forces on the superstructure—braking, wind, wind on vehicles, and thermal—are distributed to piers based on a set of rules depending on type of pier bearing or type of abutment. The longitudinal thermal movement applied to a pier is used in design of the pier with consideration of the stiffness of the bearings and pier columns. In most cases the office considers a pier column base to be fixed, however, the designer may use spring connections representing footing rotations for a column requiring more detailed analysis.

The majority of Iowa pier foundations are supported on piles. If bedrock is close to the surface, spread footings for piers may be notched into the rock layer. Drilled shafts may be an option on some sites.

Any footings subject to potential frost heave are required to have a bottom elevation a minimum of 4 feet (1.220 m) below ground line. For pier foundations in stream or river channels the office requires the designer to set the bottom of the footing a minimum of 6 feet (1.800 m) below streambed elevation, to consider scour, and to check unsupported pile length [BDM 6.6.4.1.3.1].

Early removal of pier cap formwork allows the contractor to reuse the same forms on multiple piers in a reduced time frame. As such, office policy requires designers to check if the pier cap formwork for typical frame and T-piers can be removed when the concrete strength of the pier cap reaches 2.50 ksi. Pile bent, V-pier, abutment and other types of caps need not be considered. CADD Notes E735A and E735B shall be included on the pier sheets, as needed, in plan sets involving frame and T-piers. In general, designers shall not modify the pier design to accommodate early formwork removal. Exterior loads, such as superstructure beam load, will only be applied to the pier cap in accordance with IDOT SS 2403.03, N. Additional details with respect to the load combinations and design checks required are given in BDM 6.6.4.1.1.1.

Selection criteria for pier type include the following:

- Roadway, railway, and waterway conditions;
- Subsurface conditions;
- Span length;
- Unsupported pier height;
- Vehicle or railway collision protection;
- Environmental conditions; and
- Aesthetics.

Standard office pier types are described and illustrated in the articles that follow. Special corridor projects and signature bridges often have variations of the standard types or entirely unique pier designs.

For analysis and design of frame piers and T-piers the office generally utilizes RC-Pier software supplemented with office-developed spreadsheets where needed for determination of loads. Special pier shapes and loads may be analyzed with STAAD software.

6.6.1.1.1 Frame pier [AASHTO-LRFD 3.6.5]

A frame (pedestal) pier, as illustrated in Figure 6.6.1.1.1, has a lower construction cost than a T-pier. Thus frame piers are the usual selection for:

- Road overpasses if columns are not required to be designed for the vehicular collision force [BDM 6.6.2.6 and AASHTO-LRFD 3.6.5],
- Railroad overpasses if columns are not required to be designed for the vehicular collision force [BDM 6.6.2.6 and AASHTO-LRFD 3.6.5], and
- Stream or river crossings if piers are not placed in the waterway channel and debris or ice is not a concern.

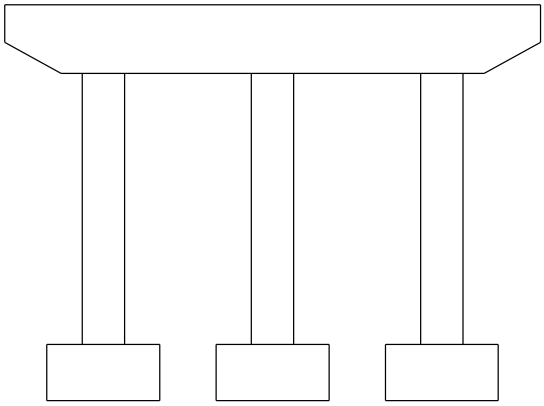

Figure note:

- See text below for dimension guidelines.
- The designer has the choice of constant depth cantilevers or tapered cantilevers.

Figure 6.6.1.1.1. Frame pier with typical cap, columns, and footings

Minimum column spacing should be 16 feet (4.877 m). Typical round column diameters are 30 inches (762 mm), 36 inches (914 mm), 42 inches (1067 mm), and 48 inches (1219 mm). Typically pier cap widths are a minimum of 3 inches (76 mm) wider than column diameter. In most cases dual bridges placed edge to edge should have separate frame piers.

For frame piers the office considers constant depth cantilevers the preferred choice for typical bridges. For bridges requiring aesthetic details the cap cantilevers may be shaped on a case-by-case basis.

Office policy is to design the tapered or constant depth cantilevers at the ends of the frame pier cap using conservative dead and live load assumptions [BDM 6.6.2.1, 6.6.2.2, Table 5.4.1.4.1.1].

6.6.1.1.2 T-pier [AASHTO-LRFD 3.6.5]

Although T-piers (hammerhead piers) have a higher construction cost than frame piers, they have several advantages over frame piers and are substituted for frame piers when any of the following conditions apply:

- The pier is within 30 feet (9.140 m) of a roadway and needs to be designed for the vehicular collision force CT [BDM 6.6.2.6 and AASHTO-LRFD 3.6.5].
- The pier is within 25 feet (7.620 m) of a railway track and needs to be designed with heavy construction [BDM 6.6.2.6 and AASHTO-LRFD C3.6.5.1]. See Article 2.1.5, “Pier Protection,” in American Railway Engineering and Maintenance-of-Way Association (AREMA), *Manual for Railway Engineering* [BDM 6.6.1.5].
- Stream or river crossings have ice or driftwood flows that are expected to cause lateral loading of the bridge piers. The preliminary guideline is to use T-piers for larger streams, where the drainage area for the bridge exceeds 50 square miles (130 square km), an area large enough to have considerable ice and debris flow.

The designer should choose approximate proportions for the length of pier cap cantilevers and column width as in Figure 6.6.1.1.2. Columns for T-piers shall be at least 30 inches (762 mm) thick to allow access for workers during construction. Columns with rounded ends should have widths the same as typical round column diameters [BDM 6.6.1.1.1]. Typically pier cap widths should be a minimum of 3 inches (76 mm) wider than column thickness.

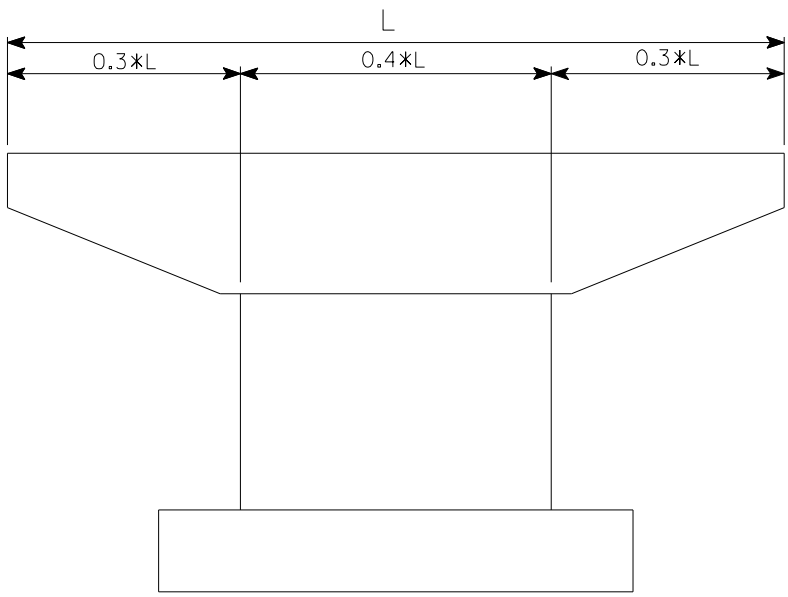

Figure note:

(1) These are approximate dimensions only; the designer should make adjustments as needed for a specific bridge.

Figure 6.6.1.1.2. T-pier with typical pier cap and footing

Office policy is to design the tapered cantilevers at the ends of the T-pier cap using conservative dead and live load assumptions [BDM 6.6.2.1, 6.6.2.2, Table 5.4.1.4.1.1].

6.6.1.1.3 Pile bent

Pile bents (P10L bents) are the usual selection for low-level, short-span CCS, PPCB, or RSB bridges. End piles are battered at a 1 horizontal to 12 vertical slope as shown in Figure 6.6.1.1.3-1.

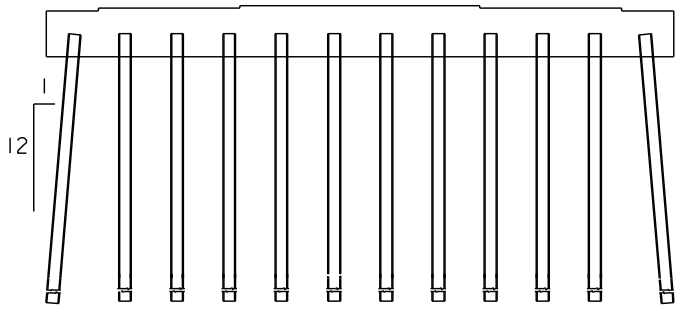

Figure 6.6.1.1.3-1. Pile bent with individual or individually encased piles

Superstructure spans exceeding 100 feet (30.480 m) usually will require pile bents with excessive numbers of piles, and for longer spans T-piers or frame piers are a better choice. For stream and river crossings, pile bents usually are appropriate for smaller streams with drainage areas less than 50 square miles (130 square km).

Piles may be encased steel H-pile shapes, prestressed concrete, or concrete-filled steel pipe.

For stream or river crossings with ice or driftwood flows that are expected to cause lateral loading of the bridge piers, the pile bent shall be fully encased as shown in Figure 6.6.1.1.3-2. Conditions that may cause lateral loading for smaller streams with drainage areas less than 50 square miles (130 square km) include urban areas with large paved areas and steep waterway channels that may cause flash flooding.

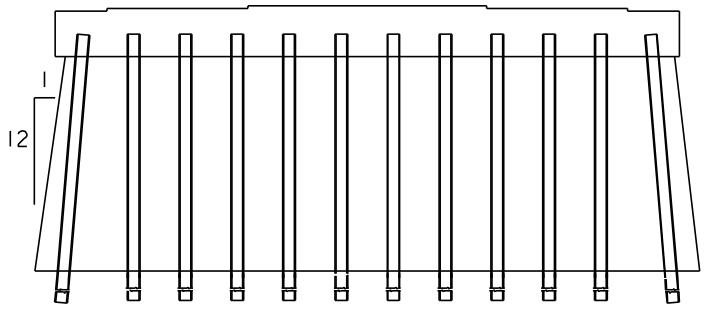

Figure 6.6.1.1.3-2. Pile bent with fully encased piles

Where encasement is required for individual piles or for the entire bent the encasement is to extend below streambed elevation as required in the detailing article of this section (BDM 6.6.4.2.2).

6.6.1.1.4 Diaphragm pier

Solid concrete diaphragm piers (wall piers) are the preferred choice for low-level, short-span slab or PPCB bridges where bedrock is near the surface and it is impractical to drive piles. Diaphragm piers have lower construction costs than T-piers.

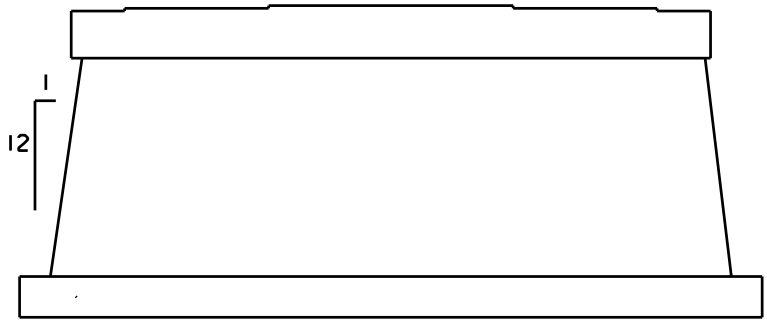

Figure 6.6.1.1.4. Diaphragm pier

The pier wall is tapered at a 1 horizontal to 12 vertical slope to serve as an icebreaker. The footing is notched into rock as required in the spread footings article (BDM 6.4.4, 6.4.5).

6.6.1.2 Design information

The “Report of Bridge Soundings” provided for each bridge site by the Soils Design Section contains recommendations for foundation type and also contains the soil logs needed for design. The majority of Iowa pier foundations are placed on piles that derive support from friction and end bearing. Design of piles is required to be in accordance with the pile section [BDM 6.2].

For horizontally curved bridges the designer will need the roadway design speed for the bridge in order to determine centrifugal force. If the design speed is not provided with other bridge design criteria the designer shall select an appropriate design speed from the Office of Design’s *Design Manual*, Article 1C-1 and confirm the value with the supervising Section Leader.

6.6.1.3 Definitions [AASHTO-LRFD 3.3.2]

Average low water is the elevation given on the type, size, and location plan (TS&L) or, if the elevation is not given, average low water shall be the elevation one foot (300 mm) above average stream bed elevation.

Average span length (ASL) is the average length of the two spans adjacent to a pier. See Figure 6.6.1.3.

Bridge length (BL) for structural design is the length from centerline of abutment bearing to centerline of abutment bearing. See Figure 6.6.1.3. In some situations, the bridge length may be taken as the length from expansion joint to expansion joint.

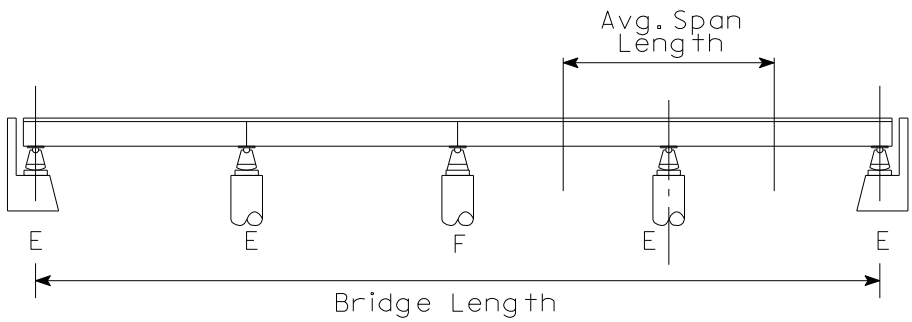

Figure 6.6.1.3. Length definitions

Section Leader is the supervisor of the Office of Bridges and Structures preliminary bridge section, final design section, or consultant coordination section.

Substructure is any construction below the bearing seats or, in the absence of bearings, below the soffit of the superstructure.

6.6.1.4 Abbreviations and notation [AASHTO-LRFD 3.3.2, C3.4.1, 3.10.4.2]

A, area of ice floe [BDM 6.6.2.9]; bearing area of an elastomeric pad [BDM 6.6.2.12.3]
A_s, peak seismic ground acceleration coefficient modified by short-period site factor [AASHTO-LRFD 3.10.4.2]
ASL, average span length
BL, bridge length
BR, braking force
CCS, continuous concrete slab
CE, centrifugal force
CR, creep
CT, vehicular collision force
CV, vessel collision force
CWPG, continuous welded plate girder
d, distance from extreme compression fiber to centroid of tension reinforcement
DC1, non-composite dead load of structural components and nonstructural attachments such as girders, deck, haunches, diaphragms, and cross frames [AASHTO-LRFD 3.3.2].
DC2, composite dead load of structural components and nonstructural attachments such as barrier rails and sidewalks, curbs, and medians that are not part of the initial deck pour [AASHTO-LRFD 3.3.2].
DD, downdrag
DW, dead load of wearing surfaces and utilities [AASHTO-LRFD 3.3.2].
E, a pier with a steel reinforced elastomeric expansion bearing [BDM 6.6.2.12.4.1, 6.6.2.12.4.2]
E_c, modulus of elasticity of concrete
E_p, modulus of elasticity of the piles
EH, horizontal earth pressure

EL, locked-in force effects from construction processes and secondary forces from post-tensioning
EQ, earthquake
ES, earth surcharge load
EV, vertical pressure from dead load of earth
F, a pier with a fixed bearing or keyed-in diaphragm [BDM 6.6.2.12.4.1, 6.6.2.12.4.2, 6.6.2.18.2.2]
$\mathbf{F_B}$, friction force for a sliding bronze plate bearing
$\mathbf{F_E}$, friction force for a steel reinforced elastomeric bearing
$\mathbf{F_R}$, friction force for a rocker bearing
FR, friction load on a pier caused by unbalanced forces from sliding bronze plate or rocker bearings
G, shear modulus of elastomer
h, distance from top of footing to top of cap
I, an integral abutment [BDM 6.6.2.12.4.1]
$\mathbf{I_c}$, moment of inertia of the pier column or columns with respect to longitudinal axis of the pier cap
IC, ice load
IM, dynamic load allowance
$\mathbf{I_p}$, moment of inertia of the entire pile group supporting the footing or footings
J, rotational stiffness of the entire pile group supporting the footing or footings for the pier
k, reduction in load intensity for multiple lane loading [BDM 6.6.2.4]; effective length factor for compression members [BDM 6.6.5.1.2.2]
$\mathbf{K_1}$**,** reduction coefficient for ice load
ℓ_u, unsupported length of compression member [BDM 6.6.4.1.2.1]
LL, vehicular live load, HL-93
$\mathbf{L_p}$, effective pile length
LS, live load surcharge
n, number of lines of beams or girders
N, number of lanes likely to become one directional during service life of the bridge
$\mathbf{N_{60}}$ **or** $\mathbf{N_{60}}$**-value**, standard penetration test number of blows per foot (300 mm) corrected to a hammer efficiency of 60%. N_{60} also may be given as **SPT** $\mathbf{N_{60}}$**-value.** The Iowa DOT is in the process of changing specifications and determining hammer calibrations so that N_{60} values will be reported. Until N_{60} values are available the designer may follow past practice and use uncorrected N-values. See the commentary discussion [BDM C6.2.1.4].
P, dead load of the superstructure
P10L, designation for the LRFD pile bent standard [OBS SS P10L], which replaces the P10A pile bent standard
PL, pedestrian live load
PPCB, pretensioned prestressed concrete beam
$\mathbf{Q_{25}}$, 25-year stream flow
r, radius of pier nose [BDM 6.6.2.9]; radius of the rocker pin [BDM 6.6.2.18.1]; radius of gyration [BDM 6.6.4.1.2.1]
R, radius of the rocker [BDM 6.6.2.18.1]
RSB, rolled steel beam
$\mathbf{S_{D1}}$**,** horizontal response spectral acceleration coefficient at 1.0-sec. period modified by long-period site factor [AASHTO-LRFD 3.10.4.2]
SE, settlement
SH, shrinkage
t, total elastomer thickness (without steel laminates) [BDM 6.6.2.12.3]
T, thermal force
TG, temperature gradient
TS&L, type, size, and location
TU, uniform temperature load
w, width of pier stem or diameter of circular pier shaft at level of ice action
WA, water load
WL, wind on live load
WS, wind load on structure
γ_{EQ}**,** load factor for live load applied simultaneously with seismic loads [AASHTO-LRFD C3.4.1]

Δ, longitudinal superstructure movement at top of pier; with subscript, a flexibility of a bearing or substructure component

μ, coefficient of friction between sliding parts in a bronze plate bearing

6.6.1.5 References

American Association of State Highway and Transportation Officials (AASHTO). *The Manual for Bridge Evaluation*. Washington: AASHTO, 2008.

American Railway Engineering and Maintenance-of-Way Association (AREMA). *Manual for Railway Engineering—1994 Edition*. Landover: AREMA, 1994.

American Society of Civil Engineers. *Minimum Design Loads for Buildings and Other Structures, ASCE 7-88*. New York: American Society of Civil Engineers, 1990.

CSA International. *Canadian Highway Bridge Design Code, CAN/CSA-S6-00 and Commentary on CAN/CSA-S6-00, Canadian Highway Bridge Design Code.* Toronto: CSA International, 2000.

Dirks, Kermit and Patrick Kam. *Foundation Soils Information Chart, Pile Foundation*. Ames: Iowa Department of Transportation, Office of Road Design, January 1989/September 1994. (a.k.a. **Blue Book**) Generally with the move to LRFD, the ASD-based Blue Book is out-of-date, and its contents have been revised and moved to the BDM. The Blue Book is available from the Soils Design Section of the Office of Design.

Haynes, F.D. "Bridge Pier Design for Ice Forces," *Ice Engineering Information Exchange Bulletin (Cold Regions Research and Engineering Laboratory)*, No. 12, December 1995.

Office of Design. *Design Manual*. Ames: Iowa Department of Transportation, 2009. (Available on the Internet at: http://www.iowadot.gov/design/dmanual/manual.html?reload)

6.6.2 Loads [AASHTO-LRFD Section 3]

Applying AASHTO loads [AASHTO-LRFD Section 3] to bridge piers requires that the designer determine numerous loads on the superstructure and substructure, consider the overall behavior of the bridge structure including bearings, and then apply combinations of loads to the piers at several limit states. This article [BDM 6.6.2] gives the policies for determination of the loads, and the following article [BDM 6.6.3] gives the applicable limit state load combinations and considerations for applying the loads to account for behavior of the overall bridge structure.

Unless otherwise noted within this series of articles, the parallel and perpendicular directions are with respect to the pier cap which, for zero skew, will be transverse and longitudinal with respect to the bridge.

6.6.2.1 Dead [AASHTO-LRFD 3.5.1]

The office classifies dead load as follows.

- DC1 is noncomposite dead load including beams or girders, deck, haunches, diaphragms, and cross frames.
- DC2 is composite dead load including barrier rails and sidewalks, curbs, and medians that are not part of the initial deck pour.
- DW is composite dead load of wearing surfaces and utilities.

Unit weight of concrete shall be taken at 0.150 kcf regardless of concrete strength.

The deck weight that is part of DC1 shall be distributed to each beam or girder assuming the slab between beams or girders is simply supported and all of the deck weight of an overhang is distributed to the exterior beam or girder.

For design of the pier cap cantilever, the entire weight of the railings, which are part of DC2, shall be applied to the exterior beams in PPCB and RSB bridges and to the exterior girders in CWPG bridges. This policy is intended to produce a conservative design for the pier cap cantilever.

For design of the pier and its foundation, however, the weight of railings shall be distributed as for beams, girders, and bearings [BDM 5.4.1.2.1, 5.5.2.2.1, 5.7.2.1]. For superstructures with roadway widths no greater than 44 feet (13.200 m) the weight of railings shall be distributed equally to all beams or girders. For superstructures with roadway widths greater than 44 feet (13.200 m) each railing along the deck edge shall be distributed one-half to the exterior beam or girder, one-quarter to the first interior beam or girder, and one-quarter to the second interior beam or girder.

Raised sidewalk and other heavy DC2 loading on the exterior beam or on the overhanging slab may be partially distributed to interior beams at the discretion of the supervising Section Leader.

For a typical CCS, PPCB, CWPG, or RSB bridge the office requires a future wearing surface load of 0.020 ksf (960 Pa), which is part of the DW load. The future wearing surface shall be distributed equally to all beams in PPCB and RSB bridges and equally to all girders in CWPG bridges.

For design of piers in PPCB, CWPG, and RSB bridges the designer shall apply DC2 and DW assuming continuity of beams and girders, except at expansion joints [BDM Table 5.4.1.4.1.1, 5.5.2.4.1.1].

For pile bents the weight of the encasement, whether for individual piles or for a pier wall, shall be included in the dead load for the pile bent design.

For ordinary Iowa soils assume a unit weight of 0.120 kcf (1920 kg/m^3) when computing downward pressure due to earth fill above footings (EV). Under high water conditions scour may remove the soil load above footings, and the potential loss of load shall be considered in design.

Unit weights for materials not covered above may be taken from the AASHTO-LRFD Specifications [AASHTO-LRFD Table 3.5.1-1].

6.6.2.2 Live [AASHTO-LRFD 3.6.1.1, 3.6.1.2, C3.6.1.2.1, 3.6.1.3, C3.6.1.3.1, 3.6.1.6]

The number of design lanes shall be determined according to the AASHTO-LRFD Specifications [AASHTO-LRFD 3.6.1.1.1].

Unless special requirements govern the design, vehicular live load (LL) for piers shall be HL-93 [AASHTO-LRFD 3.6.1.2]. It shall be applied as discussed in the AASHTO LRFD Specifications [AASHTO-LRFD 3.6.1.3].

In unusual situations identified by the Chief Structural Engineer, where a bridge will experience a high percentage of truck traffic, accumulation of trucks due to traffic flow control, or special industrial loads, the designer will need to consider additional loading as discussed in the AASHTO LRFD Specifications commentary [AASHTO-LRFD C3.6.1.2.1, C3.6.1.3.1]. In these situations the designer shall consult with the Chief Structural Engineer.

For determining live loading on a pier, the 10-foot wide (3.048 m) HL-93 lane load may be placed anywhere within a design traffic lane as indicated in Figure 6.6.2.2. The wheel loads for the HL-93 truck or tandem then will be two feet (600 mm) inside the lane boundaries. The live load shall be arranged within design traffic lanes so as to produce the beam or girder reactions required for maximum forces and moments in the pier.

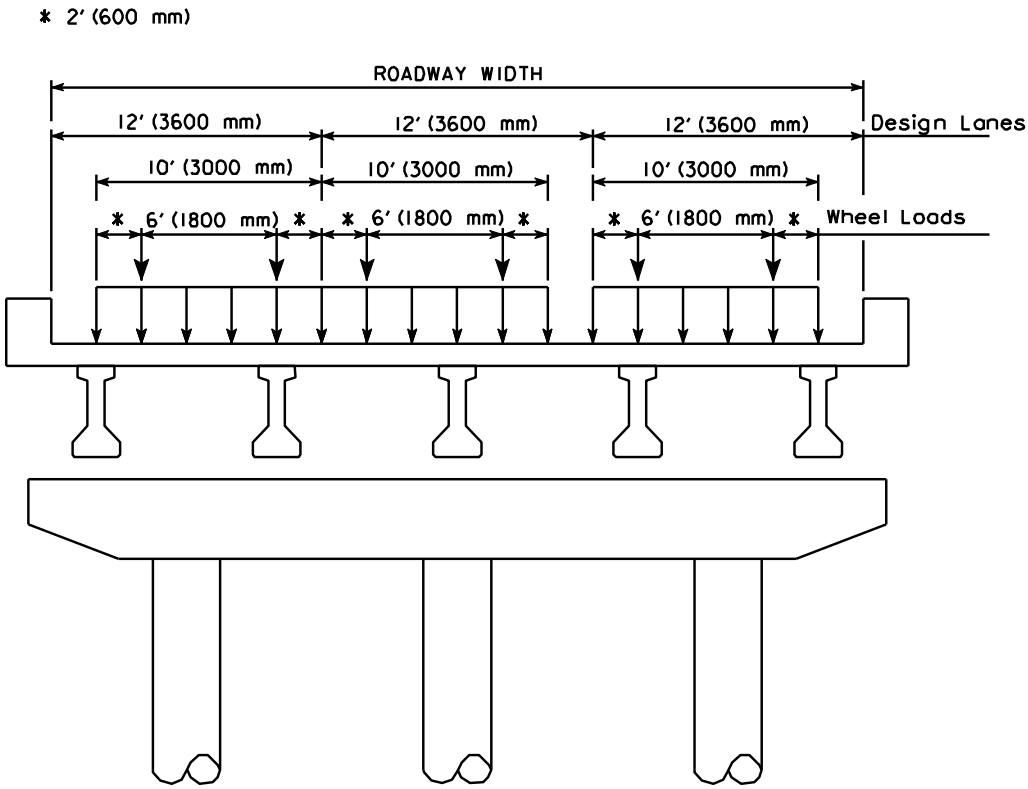

Figure 6.6.2.2. Placement of lane and truck loads within lane boundaries

For design of piles, footings, columns, frames, and pier caps (except as noted below) the live load shall be distributed to each interior beam or girder with the assumption that the slab between members is simply supported. The live load shall be distributed to the exterior beam or girder with the assumption that all of the live load on the slab overhang is transferred to the exterior member.

Where applicable, modification of load intensity due to multiple presence of live load shall be considered [AASHTO-LRFD 3.6.1.1.2].

When designing the cantilever portion of a pier cap containing only one beam or girder (as illustrated in Figure 6.6.2.2), the designer shall use a conservative load to determine moments and shears. This load only is used to analyze the moment and shear in the cantilever portion of the cap. It is not used to load the frame or to analyze other portions of the cap, column, or footing. This load is determined for PPCB bridges with the shear distribution factor given in the PPCB live load article [BDM 5.4.1.2.2] and for CWPG bridges with the shear distribution factor given in the CWPG live load article [BDM 5.5.2.2.2]. For skewed bridges the designer shall include the shear increase [AASHTO-LRFD 4.6.2.2.3c]. If the cantilevered pier cap supports two or more beams or girders, the designer shall use the distribution noted above for design of the cap cantilever.

Sidewalk and other live loads shall be added to the vehicular live load when applicable. A pedestrian live load (PL) of 0.075 ksf (3.60 kPa) shall be applied to all sidewalks wider than 2.0 feet (610 mm) [AASHTO-LRFD 3.6.1.6] and considered simultaneously with the vehicular live loads.

For design of piers in PPCB, CWPG, and RSB bridges the designer shall apply the live load assuming continuity of beams and girders, except at expansion joints [BDM Table 5.4.1.4.1.1, 5.5.2.4.1.1].

6.6.2.3 Dynamic load allowance [AASHTO-LRFD 3.6.2.1]

The dynamic load allowance (IM) shall be applied to truck or tandem loads in accordance with the AASHTO LRFD Specifications [AASHTO-LRFD 3.6.2.1].

The IM shall be applied to the design of the following pier components:

- The portion of a pier above the footing; and
- Piles in a pile bent, including the portion of the piles below ground line.

The IM shall not be applied to the design of the following pier components:

- Frame pier and T-pier footings and piles, including piles subject to scour; and
- Drilled shafts below footings.

For a column integral with a drilled shaft the designer may choose to exclude or, as a conservative design simplification, may choose to include the IM on the drilled shaft below ground.

6.6.2.4 Centrifugal force [AASHTO-LRFD 3.6.3]

For a curved bridge the designer shall apply centrifugal force (CE) in any load combination that includes HL-93 live load and should not apply that live load without centrifugal force. Centrifugal force shall be determined according to the AASHTO-LRFD Specifications [AASHTO-LRFD 3.6.3] with the exceptions discussed below.

Design speed shall be taken as listed for the appropriate highway classification in Article 1C-1 of the Office of Design's *Design Manual* unless otherwise given in specific bridge design criteria prepared by the preliminary design section or consultant coordination section. Depending on the highway classification the design manual gives design speeds from 70 mph (110 km/h) to 30 mph (50 km/h).

The number of lanes loaded for CE shall be tied to the number of lanes loaded for live load. Each bridge pier shall resist the total CE force. The force shall not be distributed among the piers.

The supervising Section Leader has the final authority for determining whether or not to apply centrifugal force for unusual bridge configurations.

6.6.2.5 Braking force [AASHTO-LRFD 3.6.4]

The braking force (BR) shall be determined according to the AASHTO-LRFD Specifications [AASHTO-LRFD 3.6.4] except that the number of lanes used to determine the total force shall be the number of lanes likely to become one directional during service life of the bridge. For a standard-width bridge designed for two-way traffic with a total of three design lanes, take the number of lanes as two, assuming a truck passing another truck on the bridge. For wider bridges designed for two-way traffic with more than three design lanes, it is overly conservative to apply the BR to all lanes. Consult with the supervising Section Leader for the number of lanes in which to apply the BR.

For bridges with any type of friction acting bearings the BR shall be distributed only to the piers and abutments with fixed or elastomeric bearings. For bridges without rocker, bronze plate, or other friction-acting bearings the BR shall be distributed to piers and abutments based on average span length as illustrated in Figure 6.6.2.4.

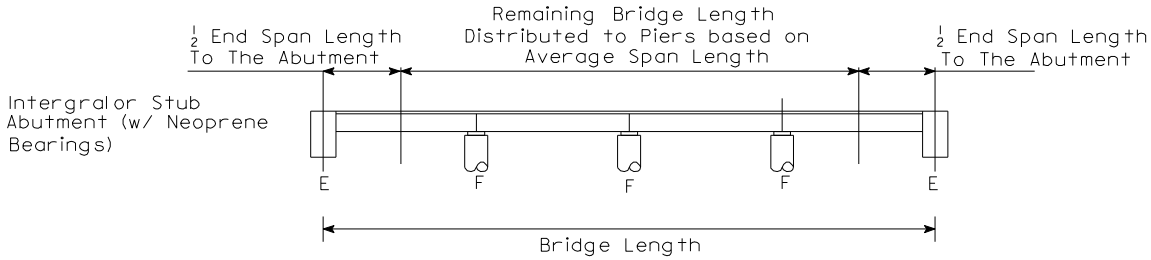

Figure 6.6.2.4. Distribution of BR for bridges without friction-acting bearings

For bridges with lengths between expansion joints greater than 1000 feet (305 m) the designer shall review the BR with the Chief Structural Engineer. It may be advisable to increase the BR by adding trucks when computing the force.

For skewed piers the application of BR at 6 feet (1.800 m) above the deck will create a moment parallel with the pier cap. The designer may apply the moment by means of vertical forces applied at beam or girder bearings.

6.6.2.6 Vehicular collision force [AASHTO-LRFD 3.6.5]

As a matter of general policy where there is sufficient space, the office will locate piers outside the clear zone of the roadway and more than 25 feet (7.620 m) from a railway. Clear zones for roadways at many locations are equal to or greater than 30 feet (9.144 m). Design for vehicular collision force (roadway) or the use of heavy construction (railway) is not required for piers located outside 30 feet (9.144 m) for roadway structures and 25 feet (7.620 m) for railway structures.

If a pier needs to be located within 25 feet (7.620 m) of a railway then the use of heavy construction, as defined in the AREMA *Manual for Railway Engineering*, is required.

If a pier needs to be located within 30 feet (9.144 m) of a roadway the designer shall investigate an exemption as described in the AASHTO LRFD Specifications Commentary [AASHTO-LRFD C3.6.5.1]. The designer shall consult with the supervising Section Leader and the Assistant Bridge Engineer regarding the exemption. In addition to the AASHTO exemption, in urban areas with low traffic speeds the Assistant Bridge Engineer may grant an exemption on a case-by-case basis. Consideration shall be given to the traffic control devices present along the route.

A pier within 30 feet (9.144 m) of a roadway that does not have an exemption either shall be designed for the 600-kip (2670 kN) vehicular collision force (CT) or shall be provided with ~~an embankment or barrier that meets~~one of the following from the AASHTO LRFD Specifications [AASHTO-LRFD 3.6.5.1].

- An embankment;
- A structurally independent, crashworthy ground-mounted 54 inch (1370 mm) high barrier, located within 10.0 feet (3.050 m) from the component being protected; or
- A 42 inch (1065 mm) high barrier located at more than 10.0 feet (3.050 m) from the component being protected.

~~For the collision force the designer typically will have three pier options for resisting the force:~~

- ~~Frame pier with crash strut,~~
- ~~T-pier, or~~
- ~~Wall pier, which may be part of an aesthetic design.~~

~~The designer should consider the options carefully because the frame pier with crash strut may be uneconomical if the columns are relatively short or the pier is relatively narrow. The designer should discuss difficult cases with the supervising Section Leader.~~

Investigations in the office have indicated that providing structural resistance in the pier usually will be a better and more economical option than providing an embankment or barrier, except where a median barrier, meeting the requirements above, will be provided as part of the highway design. In urban areas where a median barrier is necessary, ~~the barrier can be increased in height and capacity as needed and routed around the pier so that the vehicular collision force need not be applied.~~ the office prefers using a 54 inch (1370 mm) high barrier routed around and directly adjacent to the pier in order to limit intrusion into the shoulder. In such cases the pier shall be designed for the collision force since the barrier is not structurally independent.

In some cases the Office of Design may plan for safety cables or rails to prevent vehicles from impacting a bridge pier. However, the cables or rails do not satisfy the LRFD pier protection requirement [AASHTO-LRFD 3.6.5.1] since their function is primarily passenger safety. The designer should consult with the Office of Design to determine whether the cables or rails may be replaced with a crashworthy barrier, or if additional pier protection measures are required.

When piers must be designed for the vehicular collision force the office prefers the following pier types in the order in which they are listed:

- T-pier or wall pier
- Frame pier without a crash wall, or
- Frame pier with a crash wall with approval of Assistant Bridge Engineer.

T-piers and wall piers within 30 feet (9.144 m) of a roadway which meet the heavy construction requirements as defined in the AREMA *Manual for Railway Engineering* are deemed to meet the 600 kip (2670 kN) collision force requirements in AASHTO and no further design of the pier is required with respect to collision. The heavy construction requirements for these pier types are as follows:

- Cross-sectional area equal to or greater than 30 square feet (2.800 square meters),
- Minimum pier thickness of 2.5 feet (0.760 m), and
- Larger pier dimension shall be parallel to the roadway.

Frame piers without a crash wall are deemed to meet the 600 kip (2670 kN) collision force requirements in AASHTO and no further design of the pier is required with respect to collision when the following stipulations are met:

- Three or more columns connected by a continuous pier cap;
- Minimum column diameters of 4.0 feet (1.220 m);
- Vertical reinforcement for the columns shall be the greater of what is required by design (not including the Extreme Event II loading) or a minimum of 1.0% of the gross concrete section; and
- Grade 60 (Grade 420) shear reinforcement consisting of a minimum #5 (#15) tie bar which is continuously wound (spiral) with a maximum vertical pitch of 4 inches (100 mm). Individual ties shall not be substituted.

~~If a pier needs to be located within 25 feet (7.620 m) of a railway the designer shall provide the pier with heavy construction as defined in the AREMA *Manual for Railway Engineering*. The designer also shall check with the Preliminary Bridge Section regarding any additional requirements for the specific railroad under the bridge because the railroad may have requirements beyond those in the AREMA Manual [BDM 3.2.4].~~

When making decisions regarding any of the options discussed above, the designer shall consider aesthetics, maintenance, and cost as those factors apply to the specific bridge pier.

6.6.2.7 Water [AASHTO-LRFD 3.4.1, 3.7]

The preliminary bridge section or preliminary design consultant will set stream and river design conditions for use in determining water loads. However, not all of the information listed below will be given on the preliminary design plan (type, size, and location, commonly called the TS&L) in every case, and the designer should consult the referenced articles or preliminary bridge designer as needed.

- Design high water elevation will be given on the longitudinal section on the TS&L. Design high water is intended to be used for determining loads at the service and strength limit states.
- Design ice elevation [BDM 6.6.2.9] is intended to be used for determining ice loads at the extreme event limit state.
- Average low water [BDM 6.6.1.3], if given on the TS&L, will be listed in the hydraulic data. Average low water is intended to be used for determining loads at the service and strength limit states.

The preliminary bridge section or preliminary design consultant also will set the scour elevations for the design and check floods [BDM 6.6.4.1.3.1] and list the elevations in the hydraulic data, but these elevations are used to check piles [BDM 6.6.4.1.3.1], not to determine water loads.

The buoyancy load shall be consistent with the water level from which the stream and ice flow pressures are determined. For computing the buoyancy of soil under water, assume that the soil volume is one-third void. The buoyancy of submerged soil thus will be about 0.042 kcf (667 kg/m^3), two-thirds of the density of water.

The TS&L will report average stream velocity (or bridge velocity) for the design high water flood event, and this velocity should be used to determine loads at the strength and service limit states.

For piers nominally parallel with stream flow in streams with low average velocities, 0 to 5 ft/sec (0 to 1.5 m/sec), stream flow pressures (WA) may be neglected. However, if there is any skew between the pier and stream flow, the designer shall determine the longitudinal and lateral pressures as described below.

For piers located in streams with average velocities greater than 5 ft/sec (1.5 m/sec), both longitudinal and lateral stream flow pressures (WA) shall be determined according to the AASHTO LRFD Specifications [AASHTO-LRFD 3.7.3]. Computed longitudinal pressure shall be based on the drag coefficient for debris lodged against the pier [AASHTO-LRFD Table 3.7.3.1-1]. Computed lateral pressure shall be based on the drag coefficient for the actual pier skew angle with respect to stream flow [AASHTO-LRFD 3.7.3.2].

The designer shall apply in separate load combinations the stream flow force for design high water at its appropriate elevation and the force for average low water at its elevation.

If the design flood inundates part of or all of the superstructure the designer shall check a special extreme event load case. The load case shall include both vertical and lateral loads on the piles under check flood conditions. The designer will need to obtain an estimate of the check flood velocity from the preliminary designer. Because this condition is unusual the designer shall consult with the supervising Section Leader.

6.6.2.8 Wind [AASHTO-LRFD 3.4.1, 3.8]

AASHTO LRFD Specifications require that lateral wind pressures and forces be applied to exposed areas of the superstructure, to exposed areas of the substructure, and to vehicles on the superstructure. In addition, in the Strength III limit state, an upward force is to be applied to the underside of the deck when the wind skew angle is 0 degrees with respect to the superstructure. Although the upward force also is indicated for the Service IV limit state [AASHTO-LRFD Table 3.4.1-1] typical bridges do not have the prestressed concrete columns for which the limit state applies. In addition to the basic wind loads described in this article, see the load application article [BDM 6.6.3] for application of these loads to the entire bridge structure.

For Iowa wind loads, in general the office determines wind loads using the following conditions:

- V_B = 100 mph (161 km/h) [AASHTO-LRFD 3.8.1.1]
- V_{30} = 80 mph (129 km/h) from the basic wind speed map in ASCE 7-88 [BDM 6.6.1.5]
- Upstream surface condition is open country.

For typical Iowa bridges wind load seldom controls pier design, and for those bridges the office uses conservative uniform wind pressures applied to the superstructure and substructure. When piers are relatively tall or the structure has an unusual configuration, the designer will need to adjust the pressures. If analysis indicates that the conservative wind pressures control pier design, the designer shall consult with the supervising Section Leader.

6.6.2.8.1 Horizontal pressure on superstructure [AASHTO-LRFD 3.8.1, 3.8.2]

Both transverse (WS_t) and longitudinal (WS_l) wind forces (with respect to the superstructure) shall be applied to each pier based on wind area for the pier's average span length (ASL).

WS = (Wind Area Per Unit Length) (ASL) (Design Wind Pressure)

Where:

Wind Area Per Unit Length = the sum of the projected railing, deck, and exterior beam or girder area per unit length as indicated in Figure 6.6.2.8.1. Units are ft^2/ft (mm^2/mm).

ASL = the average span length in feet (mm).

Design Wind Pressures for transverse and longitudinal loads should be taken as the base wind pressures in the AASHTO-LRFD Specifications [AASHTO-LRFD Tables 3.8.1.2.1-1 and 3.8.1.2.2-1] for superstructure top-of-railing elevations up to 100 feet (30.480 m) above ground or water. For typical bridges with spans not exceeding 155 feet (47.240 m) and top-of-railing elevations not exceeding 100 feet (30.480 m) the designer may use a simplified wind load of 0.050 ksf (2.39 kPa) in the transverse direction applied simultaneously with 0.012 ksf (0.575 kPa) in the longitudinal direction rather than multiple skewed wind load cases [AASHTO-LRFD 3.8.1.2.2].

Note that at an elevation of 100 feet (30.480 m) with assumptions of V_{30} = 80 mph (129 km/h), open country, and no skew angle, the lateral load pressure for beams or girders computes as 0.050 ksf (2.39 kPa). Therefore, above 100 feet (30.480 m) the design wind pressures shall be adjusted upward based on the computed design wind velocity, V_{DZ} [AASHTO-LRFD 3.8.1.1 and 3.8.2.1.2.1].

Both WS_t and WS_l shall be applied simultaneously at the center of gravity of the exposed area as shown in Figure 6.6.2.8.1, except as modified in load application articles [BDM Tables 6.6.3.4 and 6.6.3.5].

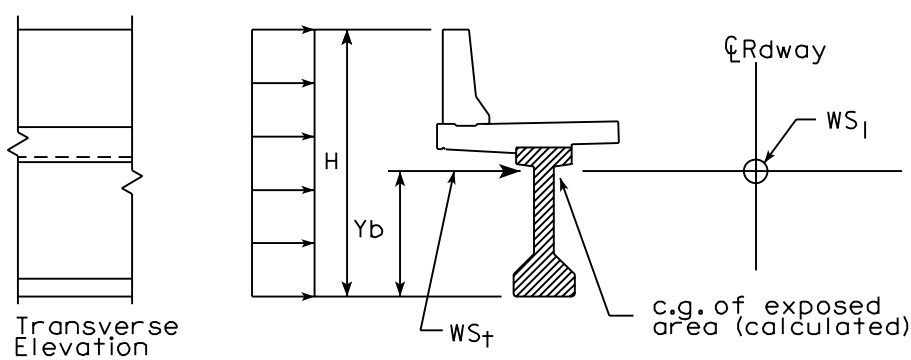

Figure 6.6.2.8.1. Application of wind load to superstructure

For bridges with friction-acting expansion bearings [BDM 6.6.3.3.3], the WS_l based on ASL shall be distributed according to the rules in a subsequent article [BDM Table 6.6.3.4].

6.6.2.8.2 Horizontal pressure on substructure [AASHTO-LRFD 3.8.1, 3.8.2]

Both transverse (WS_t) and longitudinal (WS_l) wind forces (with respect to the superstructure) on the substructure shall be determined and applied as required in the AASHTO LRFD Specifications [AASHTO-LRFD 3.8.1.2.3].

The assumed base wind pressure of 0.040 ksf (1.92 kPa) shall be applied to piers when the top-of-railing height for the bridge does not exceed 100 feet (30.480 m) above ground or water. The 0.040 ksf (1.92 kPa) is approximately the average pressure that would be computed from 0 to 100 feet (0 to 30.480 m). If the top-of-railing elevation is above 100 feet (30.480 m) the design wind pressure shall be adjusted for appropriate heights based on the computed design wind velocity, V_{DZ} [AASHTO-LRFD 3.8.1.1 and 3.8.2.1.2.1].

For typical bridges with spans not exceeding 155 feet (47.240 m) and top-of-railing elevations not exceeding 100 feet (30.480 m) the designer may simplify the wind loading by applying 0.040 ksf (1.92 kPa) simultaneously in the longitudinal and transverse directions rather than multiple skewed wind load cases.

6.6.2.8.3 Vehicles on superstructure [AASHTO-LRFD 3.8.1.3]

Both transverse (WL_t) and longitudinal (WL_l) wind forces (with respect to the superstructure) on vehicles shall be determined as required in the AASHTO-LRFD Specifications [AASHTO-LRFD 3.8.1.3]. For usual girder and slab bridges, wind forces on live load are based on components applied over the pier's average span length (ASL), except as modified to account for unusual features of the bridge structure [BDM 6.6.3].

$$WL = (\text{Component})\ (\text{ASL})$$

Where:

Normal or parallel component in klf (kN/m) shall be taken from AASHTO-LRFD Table 3.8.1.3-1. WL is not adjusted for V_{30} or elevation of bridge deck.

ASL = average span length in feet (mm).

Both WL_t and WL_l shall be applied simultaneously at 6 feet (1800 mm) above the roadway surface, except as modified in load application articles [BDM Tables 6.6.3.4 and 6.6.3.5].

For typical bridges with spans not exceeding 155 feet (47.240 m) the designer may use a simplified wind load of 0.100 klf (1.46 kN/m) in the transverse direction applied simultaneously with 0.040 klf (0.584 kN/m) in the longitudinal direction rather than multiple skewed wind load cases [AASHTO-LRFD 3.8.1.3].

For bridges with friction-acting expansion bearings [BDM 6.6.3.3.3], the WL_l based on ASL shall be distributed according to the rules in a subsequent article [BDM Table 6.6.3.4].

6.6.2.8.4 Vertical pressure on superstructure [AASHTO-LRFD 3.8.2]

To check overturning of all piers, an upward vertical wind pressure of 0.020 ksf (0.960 kPa) shall be applied to the underside of the superstructure as described in the AASHTO-LRFD Specifications [AASHTO-LRFD 3.8.2]. For typical bridges the pressure is applied only in the Strength III load combination when the wind skew angle with respect to the superstructure is zero degrees. The designer shall check the structure both with and without the vertical load.

6.6.2.9 Ice [AASHTO-LRFD 3.9]

All Iowa bridges subject to ice conditions shall be designed for ice loads (IC). Ice loads always are considered for larger streams and rivers when the drainage area is 50 square miles (130 square kilometers) or greater. Ice loads may be considered for smaller streams depending on history and site conditions.

Effective ice strength shall be taken as 24.0 ksf (1150 kPa) [AASHTO-LRFD 3.9.2.1].

Design ice thickness for all Iowa streams and rivers except the Mississippi and Missouri Rivers shall be selected from Table 6.6.2.9 based on the Iowa DOT District.

Table 6.6.2.9. Design ice thickness by Iowa DOT District

District	Thickness, inches (mm)
5	15 (380)
1, 4, 6	17 (430)
2, 3	19 (480)

The ice thicknesses for Mississippi and Missouri River bridges are special cases that need to be investigated as recommended by the Chief Structural Engineer.

Ice crushing and flexing forces for piers in Iowa streams and rivers shall be determined in accordance with the AASHTO-LRFD Specifications [AASHTO-LRFD 3.9.2].

For small streams the designer may consider reduction of the stream or river ice load for a bridge less than 300 feet (91.400 m) long [AASHTO-LRFD 3.9.2.3]. Bridge length is a conservative assumption for stream width. The reduction factor K_1 shall be interpolated from the commentary table [AASHTO-LRFD Table C3.9.2.3-1] based on A/r^2 (A = area of ice floe, r = radius of pier nose). The designer may estimate area of ice floe as a circular area with diameter equal to the larger of two-thirds of the opening between the pier and abutment, or between piers.

The designer should note that the AASHTO-LRFD Specifications require forces both parallel with and perpendicular to the pier shaft [AASHTO-LRFD 3.9.2.4]. Unless the preliminary bridge plan (type, size and location, commonly called the TS&L) clearly shows a skew between pier and stream or river flow, the designer may assume the pier parallel to flow condition [AASHTO-LRFD 3.9.2.4.1]. The designer also may assume the friction angle, θ_f [AASHTO-LRFD 3.9.2.4.1], to be 6 degrees unless more precise information is available.

For pier shafts skewed to stream flow the total force on the pier will be determined based on projected pier width [AASHTO-LRFD 3.9.2.4.2]. The projected width will increase the ice load and, if the load seems excessive, the designer should investigate a circular pier shaft or other pier alternatives.

Unless elevation of ice is specified on the TS&L, the ice load shall be applied for the Extreme Event II load combination midway between design high water and average low water elevation.

For bridges over lakes, static ice pressure (lake ice) [AASHTO-LRFD 3.9.3] shall be considered. Some guidance is available in “Bridge Pier Design for Ice Forces” [BDM 6.6.1.5]. The designer shall consult with the supervising Section Leader for the value to be used in design.

6.6.2.10 Earthquake [AASHTO-LRFD C3.4.1, 3.10.3.1, 3.10.4.2, 3.10.6, 3.10.9.2, 4.7.4.1, 4.7.4.4]

Based on the acceleration coefficient S_{D1} [AASHTO-LRFD 3.10.4.2] for Site Class A though E [AASHTO-LRFD 3.10.3.1], all of Iowa shall be classified as Seismic Zone 1 [AASHTO-LRFD 3.10.6] for design of typical bridges. For unusual cases where the site is classified as Site Class F, and for Missouri River and Mississippi River bridges the designer shall determine the Seismic Zone based on the specific site characteristics.

Bridges in Seismic Zone 1 need not be analyzed for seismic forces (EQ) [AASHTO-LRFD 4.7.4.1]. However, connections that attach the superstructure to a pier so as to restrain relative movement shall be designed for horizontal connection forces. The acceleration coefficient A_S [AASHTO-LRFD 3.10.4.2] will vary below and above 0.05 in Iowa, generally below in northern Iowa and above in southern Iowa. Therefore the horizontal design connection force in restrained directions shall be taken as either 0.15 (if $A_s < 0.05$) or 0.25 (if $A_s \geq 0.05$) times the vertical reaction due to the tributary permanent load [AASHTO-

LRFD 3.10.9.2]. The office neglects any live load in determining the connection force, consistent with γ_{EQ} = 0.0 [AASHTO-LRFD C3.4.1].

For a pier at a deck expansion joint the designer shall provide the minimum bridge seat width for the expansion bearings [AASHTO-LRFD 4.7.4.4].

6.6.2.11 Earth pressure [AASHTO-LRFD 3.11]

For two-span bridges with integral abutments, unbalanced passive soil pressure shall be considered along with thermal force [BDM Table 6.6.2.12.4.1].

6.6.2.12 Uniform temperature [AASHTO-LRFD 3.4.1, 3.12.2]

Application of loads caused by temperature change to piers involves consideration of the entire bridge structure—superstructure, bearings, piers, abutments, and foundations. Under the AASHTO Standard Specifications, pier loads caused by thermal expansion or contraction of the superstructure were placed in a single category but, under the AASHTO LRFD Specifications, there are two load categories that apply depending on type of bearing: uniform temperature (TU) and friction (FR), each with different load factors. Considering temperature and friction, as well as creep (CR) and shrinkage (SH), the office intends to use the gross moment of inertia for pier force computations.

The uniform temperature (TU) load category relates to steel reinforced elastomeric bearings, fixed bearings, and keyed diaphragms. For uniform temperature the strength limit state load factors are 0.50/1.20, and the service limit state load factors are 1.00/1.20. In each case the first, smaller factor is intended to be applied to forces, and the second, larger factor is intended to be applied to deformations [AASHTO-LRFD 3.4.1].

The friction (FR) category [BDM 6.6.2.18] relates to friction-acting bearings such as sliding plates and rockers. At the strength, extreme event, and service limit states the load factor is to be taken as 1.00 [AASHTO-LRFD 3.4.1].

In cases where the bridge has both steel reinforced bearing pads and sliding bronze plate or rocker bearings the controlling pier forces from temperature and friction may not be obvious due to the difference in load factors. The designer should start with the friction forces, conservatively assuming a load factor of 1.00. After iterations to determine the controlling force combinations the designer shall consult with the supervising Section Leader.

In-plane pier thermal forces also fall under the uniform temperature category [BDM 6.6.2.12.6].

6.6.2.12.1 General [AASHTO-LRFD 3.4.1]

Pier thermal forces develop as temperatures fluctuate and cause changes in length of the superstructure. Those length changes are transmitted partially or fully through the bearings and keyed-in diaphragms to the tops of piers. Longitudinal superstructure movements applied to the tops of non-skewed piers cause longitudinal forces as piers resist the movements, and longitudinal movements applied to skewed piers cause forces both perpendicular to and parallel with the piers.

Forces applied to piers will vary depending on the following factors:

- Location of pier with respect to temperature movement,
- Symmetry or lack of symmetry in spans,
- Variation in column heights and cross sections,
- Skew of piers with respect to superstructure,
- Type of bearing, which will result in either uniform temperature (TU) or friction (FR) forces, and
- Amount of foundation fixity.

The designer shall consider all of these factors as they apply to the overall bridge structure.

Office policy is to use fixed bearings or keyed-in diaphragms at piers wherever practical and cost effective. In order to reduce calculated thermal forces on fixed piers the designer may consider the following reductions, where applicable.

- Pier column bases may be considered partially fixed when founded on piles. The degree of fixity depends on the moment of inertia of the pile group, pile type, and pile length [BDM 6.6.2.12.3]. Partial fixity will reduce rotational stiffness of the column base, thus reducing thermal forces in the pier. This partial fixity assumption does not apply to piers founded on rock and will have little effect if piles are short.
- For skewed T-piers supporting PPCB superstructures with plain neoprene bearing pads, the designer may reduce horizontal deflection computed for the pier's strong axis by 1/16 inch (2 mm). For the typical keyed-in diaphragm detail and large thermal forces with respect to the pier's strong axis, the neoprene pads and ~~compressible~~ resilient joint filler will permit some movement in the pier keyway. The office therefore permits the reduction in horizontal deflection and associated reduction in thermal force.

Because of the 0.5 LRFD load factor for uniform temperature (TU) forces in concrete substructures, which results in a reduction from design under the AASHTO Standard Specifications, LRFD thermal forces on typical piers are likely to be smaller than those applied under service load design. However, if fixed bearings cause excessive pier forces, or if fixed bearing pier designs are uneconomical, the designer may use expansion bearings. Because the typical bridge has either integral abutments assumed to be similar to expansion bearings for thermal movements or stub abutments with expansion bearings, at least one of the pier bearings shall be fixed, unless an exception is approved by the supervising Section Leader.

For steel substructures the TU load factor is 1.0. See the discussion regarding TU load factors in the AASHTO LRFD Specifications [AASHTO-LRFD 3.4.1].

For typical bridges, in lieu of a special analysis, the designer may use the criteria in the articles that follow and in the load application article [BDM 6.6.3]. However, conditions such as highly irregular span lengths, large variations in pier heights or stiffnesses, skews greater than 30 degrees, unusually large deck widths, unusual bearings or combinations of bearings, and unusual pier types will require special analysis and consultation with the supervising Section Leader.

6.6.2.12.2 Design temperature changes [AASHTO-LRFD 3.12.2]

Based on experience, the office uses the design temperature ranges and thermal coefficients for cold climate in Table 6.6.2.12.2 rather than Procedure A or B in the AASHTO LRFD Specifications [AASHTO-LRFD 3.12.2]. No bearing setting factors are required for pier design.

Table 6.6.2.12.2. Design temperature ranges and thermal coefficient

Type of Superstructure	Design Temperature Range	Thermal Coefficient
Steel	75°F each way from 50°F, 150°F temperature range (42°C each way from 10°C, 84°C temperature range)	0.0000065 /°F (0.000012 /°C)
Concrete	50°each way from 50°F, 100°F temperature range (28°C each way from 10°C, 56°C temperature range)	0.0000060 /°F (0.000011 /°C)

When determining in-plane thermal forces for reinforced concrete frame piers, use the concrete temperature range and thermal coefficient in the table above.

6.6.2.12.3 Out-of-plane forces [AASHTO-LRFD 14.7.6.2]

The thermal force (TU) for a non-skewed pier is based on the amount of longitudinal temperature movement in the superstructure at the pier. The design movement for a specific pier shall be determined from the overall arrangement of piers, spans, abutments, and bearings for the bridge, and the pier force shall be determined considering the movement and the additional rules for unbalanced forces in the next article [BDM 6.6.2.12.4].

Pier design software generally will use the stiffness method to determine pier thermal forces but, for hand computations, the thermal force applied to a pier can be determined by the flexibility method as outlined below. The longitudinal temperature movement in the superstructure is equated to the sum of applicable flexibilities of the bearing, pier, and pile foundation. Flexibilities that do not apply or that the designer chooses to neglect are taken as zero.

$$\Delta = \Delta_1 + \Delta_2 + \Delta_3$$

Where:

Δ = longitudinal superstructure movement at top of the pier
Δ_1 = shear flexibility of the elastomeric bearing pads
Δ_2 = bending flexibility of the pier column(s)
Δ_3 = rotational flexibility of the piling group(s) below the pier footing(s)

Figure 6.6.2.12.3-1 illustrates the superstructure movement and flexibilities for two expansion piers with elastomeric bearings and founded on piles.

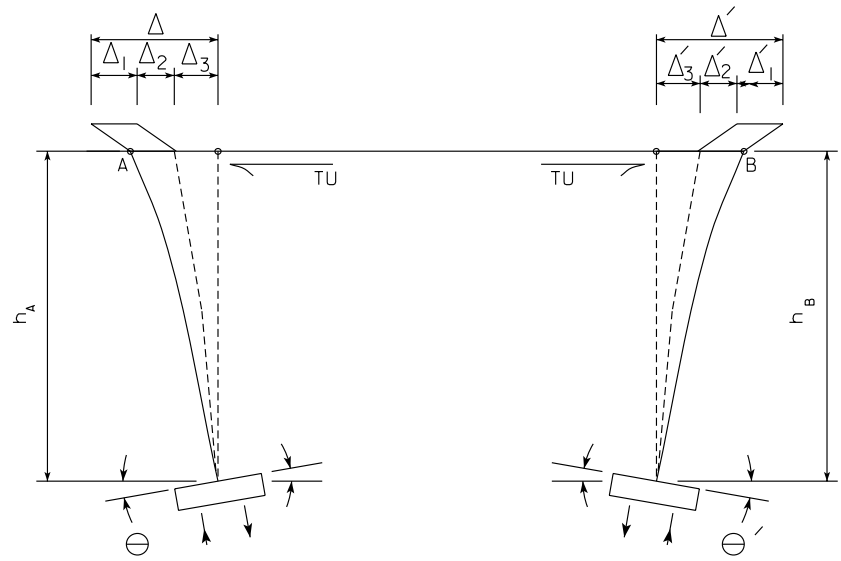

Figure 6.6.2.12.3-1. Expansion piers with steel reinforced elastomeric bearings and pile foundations loaded with opposing superstructure movements

The shear flexibility applies only to expansion piers with steel reinforced elastomeric bearings and is determined as follows.

$$\Delta_1 = \frac{(TU)t}{nAG}$$

Where:

TU = thermal force, k (N)
t = total elastomer thickness (without steel laminates), in (mm)
n = number of steel reinforced elastomeric bearings on the pier. For pretensioned prestressed concrete beams there typically are two bearings per beam line, but for continuous welded plate girders there typically is only one bearing per beam line.
A = bearing area of an elastomeric bearing, in^2 (mm^2)
G = shear modulus for the elastomer, ksi (MPa). Because the office specifies elastomer by durometer, the value selected for G shall be the maximum for the specified durometer as listed in Table 6.6.2.12.3-1 [AASHTO-LRFD 14.7.6.2].

Table 6.6.2.12.3-1. Maximum shear moduli for elastomer specified by durometer

Durometer	Maximum shear modulus, G ksi (MPa)
50	0.130 (0.90)
60	0.200 (1.38)

The bending flexibility applies to all piers and is determined as follows.

$$\Delta_2 = \frac{(TU)h^3}{3E_c I_c}$$

Where:

TU = thermal force, k (N)
h = distance from top of footing to top of cap, in (mm)
E_c = modulus of elasticity of concrete, ksi (MPa)
I_c = moment of inertia of the pier column or columns with respect to the longitudinal axis of the pier cap, in^4 (mm^4)

The piling group rotational flexibility applies only to piers supported on piles and is determined as follows.

$$\Delta_3 = \frac{(TU)h^2}{J}$$

Where:

TU = thermal force, k (N)
h = distance from top of footing to top of cap, in (mm)
J = rotational stiffness of the entire pile group supporting the footing or footings for the pier, and
J = $E_p I_p / L_p$
E_p = modulus of elasticity of the piles, ksi (MPa)
I_p = moment of inertia of the entire pile group supporting the footing or footings, in^4 (mm^4)
L_p = effective pile length, in (mm). For friction piles, such as wood or steel piles not driven to bedrock, use 50% of the actual length. For end bearing piles, such as steel piles driven to bedrock, use 75% of the actual length.

Applicability of the different flexibilities, as well as friction forces, is summarized in Table 6.6.2.12.3-2.

Table 6.6.2.12.3-2 Thermal force flexibilities and friction forces for PPCB, CWPG, and RSB superstructures

Pier Bearing Type	Foundation Type	Flexibility for Thermal Force (TU)			Friction Force (FR)
		Bearing Pad Shear	Column Bending	Footing Rotation	
Fixed	Spread footing on rock		Δ_2		
Fixed	Footing on piles		Δ_2	Δ_3	
Expansion, elastomeric	Spread footing on rock	Δ_1	Δ_2		FR_E (1)
Expansion, elastomeric	Footing on piles	Δ_1	Δ_2	Δ_3	FR_E (1)
Expansion, sliding plate	Footing on piles or spread footing on rock				FR_B (2)
Expansion, rocker	Footing on piles or spread footing on rock				FR_R (2)

Table notes:

(1) Steel reinforced elastomeric bearings shall be designed not to slip [BDM 5.7.4.2.1]. The friction force will not control analysis of the pier.

(2) These friction forces for sliding plate and rocker bearings are defined in a subsequent article [BDM 6.6.2.18.1].

6.6.2.12.4 Unbalanced forces

Unbalanced thermal forces (TU) will result if there is lack of symmetry in span lengths, bearing properties, pier types, and/or superstructure materials along the length of the bridge. (Unbalanced friction forces (FR), which are similar to unbalanced thermal forces (TU), are illustrated in BDM Figure 6.6.2.18.2.2.) If both thermal (TU) and friction (FR) forces are present the designer shall determine the imbalance considering factored forces.

Office policy is to apply some reasonable thermal or friction force to a pier in all cases, even if symmetry would indicate that the force is zero. Guidelines for the thermal force (TU) are given in the following two subarticles, and guidelines for the friction force are given in a subsequent article [BDM 6.6.2.18.2.2].

6.6.2.12.4.1 Bridges with integral abutments

For bridges with integral abutments and piers with fixed or elastomeric expansion bearings, consider thermal forces caused by all of the following rules that are applicable, and select the largest force for each pier:

(a) Thermal force if expansion occurs from a pier with fixed bearings or a central location among piers with fixed bearings
(b) Thermal force based on the force experienced by an adjacent pier
(c) Unbalanced thermal forces considering all expansion bearings in the structure
(d) Special forces for two-span bridges

Table 6.6.2.12.4.1 lists the office policies for typical two- to four-span integral abutment bridges that do not have large variations in pier stiffness. To determine the thermal forces at the piers for a support configuration not listed in the table or for bridges with more than four spans, the designer shall apply rules (a) through (d) and consider any large variations in pier stiffness.

Table 6.6.2.12.4.1. Thermal forces for piers in bridges with integral abutments, fixed bearings, and elastomeric expansion bearings

No. of Spans	Support Configuration(1), Pier Bearing Type	Rule(s): Use the maximum of the forces listed for the number of spans, support configuration, and bearing type.(2)
2	Fixed, I-**F**-I	(d): Larger of the following: thermal force based on 25% of longer adjacent span length or 5% of larger passive soil resistance at an abutment(3)
2	Expansion, I-**E**-I(4)	(d): Thermal force based on shear deflection of the expansion bearings for 25% of the longer adjacent span length(5)
3	Fixed, I-**F**-**F**-I	(a): Thermal force based on 50% of center span length
3	Fixed, I-E-**F**-I	(b): Thermal force based on shear deflection of the expansion bearings on the adjacent pier. (Expansion length for calculating thermal force shall be the center span length.)(5)
3	Expansion, I-**E**-F-I	(a): Thermal force based on shear deflection of the expansion bearings on the pier. (Expansion length for calculating thermal force shall be the center span length.)(5)
4	Fixed, I-E-**F**-E-I	(b): Thermal force based on shear deflection of the expansion bearings adjacent to the longer interior span length. (Expansion length for calculating thermal force shall be the longer interior span length.)(5) (6)
4	Expansion, I-**E**-F-**E**-I	(a): Thermal force based on shear deflection of the expansion bearings on the pier. (Expansion length for calculating thermal force shall be the adjacent interior span length.)(5)
4	Fixed, I-F-**F**-F-I	(b): Thermal force based on longer adjacent interior span length
4	Fixed, I-**F**-F-**F**-I	(a): Thermal force based on adjacent interior span length

Table notes:

(1) I indicates an integral abutment, E indicates a pier with steel reinforced elastomeric expansion bearings, F indicates a pier with fixed bearings or a keyed-in diaphragm, and an underline indicates the pier for which the thermal forces apply.
(2) Steel reinforced elastomeric bearings shall be designed not to slip [BDM 5.7.4.2.1].
(3) For this two-span condition, consider the passive soil resistance to be a thermal force (TU). Use typical berm soil properties to determine the passive pressure [BDM 5.6.2.1.2]. For more than two spans the usual thermal forces will provide sufficient design values, and the passive pressure force need not be considered in typical structures.
(4) Office policy is to provide at least one fixed pier per bridge. This bearing arrangement violates the policy and must be approved by the supervising Section Leader.
(5) Consider flexibilities of bearings, pier column(s), and pier footing(s) as applicable.
(6) Rule (c) also applies but obviously will result in a much smaller force in this case.

6.6.2.12.4.2 Bridges with stub abutments

For bridges with stub abutments and piers with fixed or elastomeric expansion bearings, consider thermal forces caused by all of the following rules that are applicable, and select the largest force for each pier:

(a) Thermal force if expansion occurs from a pier with fixed bearings or a central location among piers with fixed bearings
(b) Thermal force based on the force experienced by an adjacent pier
(c) Unbalanced thermal force considering all expansion bearings in the structure
(d) Special forces for two-span bridges

Table 6.6.2.12.4.2 lists the office policies for typical two- to four-span stub abutment bridges that do not have large variations in pier stiffness. To determine the thermal forces at the piers for a support configuration not listed in the table or for bridges with more than four spans, the designer shall apply rules (a) through (d) and consider any large variations in pier stiffness.

Table 6.6.2.12.4.2. Thermal forces for piers in bridges with stub abutments, fixed bearings, and elastomeric expansion bearings

No. of Spans	Support Configuration(1), Pier Bearing Type	Rule(s): Use the maximum of the forces listed for the number of spans, support configuration, and bearing type.(2)
2	Fixed, E-**F**-E	(c): Unbalanced thermal force based on shear deflection of all expansion bearings in the structure or (d): Thermal force based on 50% of longer adjacent span length or 50% of equal adjacent span lengths
3	Fixed, E-**F**-**F**-E	(a): Thermal force based on 50% of center span length
3	Fixed, E-E-**F**-E	(b): Thermal force based on shear deflection of expansion bearings on the adjacent pier. (Expansion length for calculating thermal force shall be the center span length.)(3) or (c): Unbalanced thermal force based on shear deflection of all expansion bearings in the structure
3	Expansion, E-**E**-F-E	(a): Thermal force based on shear deflection of expansion bearings on the pier. (Expansion length for calculating thermal force shall be the center span length.)(3)
4	Fixed, E-E-**F**-E-E	(b): Thermal force based on shear deflection of the expansion bearings on the pier adjacent to the longer interior span length. (Expansion length for calculating thermal force shall be the longer interior span length.)(3) or (c): Unbalanced thermal force based on shear deflection of all expansion bearings in the structure
4	Expansion, E-**E**-F-**E**-E	(a): Thermal force based on shear deflection of the expansion bearings on the pier. (Expansion length for calculating thermal force shall be the adjacent interior span length.)(3)
4	Fixed, E-F-**F**-F-E	(b): Thermal force based on the longer adjacent interior span length
4	Fixed, E-**F**-F-**F**-E	(a): Thermal force based on adjacent interior span length

Table notes:

(1) E indicates a stub abutment or a pier with steel reinforced elastomeric expansion bearings, F indicates a pier with fixed bearings or a keyed-in diaphragm, and an underline indicates the pier for which the thermal forces apply.
(2) Steel reinforced elastomeric bearings shall be designed not to slip [BDM 5.7.4.2.1].
(3) Consider flexibilities of bearings, pier column(s), and pier footing(s) as applicable.

6.6.2.12.5 Skewed pier forces

For skewed piers, longitudinal movement of the superstructure causes thermal forces (TU) both perpendicular to the pier (out-of-plane) and parallel with the pier (in-plane). With hand computations forces applied to a skewed pier are determined from perpendicular and parallel components of the longitudinal movement, as illustrated in Figure 6.6.2.12.5.

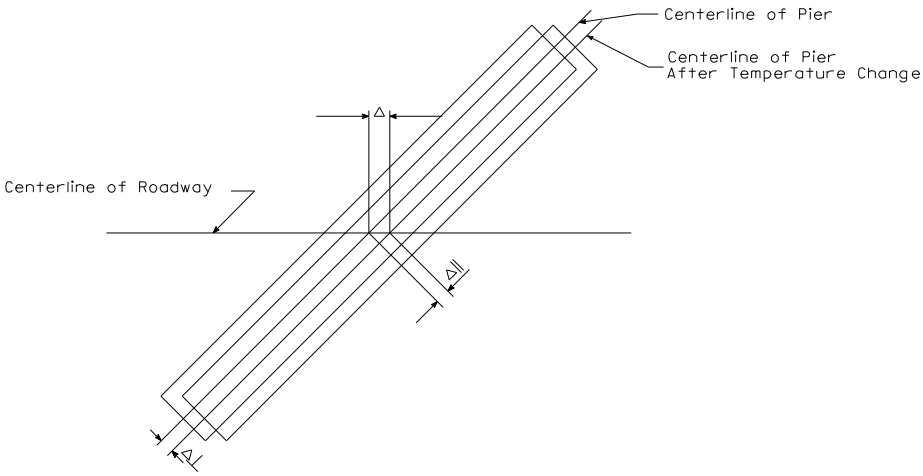

Figure 6.6.2.12.5. Perpendicular and parallel components of superstructure movement

The perpendicular movement determines the out-of-plane thermal force as outlined in [BDM 6.6.2.12.3]. The parallel movement is used in a similar way, except that for frame piers the column bending flexibility is replaced by the frame flexibility.

6.6.2.12.6 In-plane forces

Frame (pedestal) piers shall be designed for in-plane thermal forces within frame members. Thermal coefficient and temperature rise and fall (without setting factor) shall be taken from the design temperature change article [BDM Table 6.6.2.12.2].

6.6.2.13 Temperature gradient [AASHTO-LRFD C3.12.3]

For typical CCS, PPCB, CWPG, and RSB bridges the designer need not consider temperature gradient (TG) [AASHTO-LRFD C3.12.3].

6.6.2.14 Shrinkage [AASHTO-LRFD 3.4.1]

Concrete frame (pedestal) piers of usual and special configuration shall be designed for in-plane shrinkage forces within frame members (SH). For normal weight concrete the shrinkage coefficient shall be 0.0002 and shall be applied with the gross moments of inertia of frame members. Beyond this 28-day amount, shrinkage need not be considered for typical piers because creep will partially mitigate long-term shrinkage effects.

Under normal construction practice, shrinkage along the length of Iowa standard pretensioned prestressed concrete beams (PPCB) is small because most of the shrinkage takes place before the beams are placed in a bridge. Although shrinkage of the deck shall not be neglected for determining width of expansion joints, shrinkage of the deck may be neglected for pier design because the shrinkage will take place slowly and can be accommodated by creep. However, the designer should be alert to unusual situations when significant longitudinal shrinkage in beams or decks will take place after beam placement.

6.6.2.15 Creep

For typical new bridges the designer need not consider longitudinal effects of creep (CR).

6.6.2.16 Locked-in force

Locked-in force effects (EL) generally are not a concern for typical new bridges. However, on widening and staged construction projects the designer shall consider locked-in effects for differential creep and shrinkage between old and new members.

6.6.2.17 Settlement

For typical bridges supported on friction and/or end bearing piles designed with the geotechnical resistance charts [BDM 6.2.7] or supported on spread footings on rock, the designer need not consider loads caused by settlement (SE) unless advised to do so by the Soils Design Section.

6.6.2.18 Friction

Longitudinal forces caused by bronze sliding plate, Teflon (PTFE) sliding plate, and rocker bearings shall be considered friction forces (FR).

6.6.2.18.1 Out-of-plane forces

Although the office no longer specifies sliding plate bearings for ordinary new construction, sliding lubricated bronze plate bearings may be used on widening and rehabilitation projects and where steel reinforced elastomeric bearings cannot be used. For details see the standard sheet [OBS SS 4541]. The friction force for sliding bearings is computed as follows.

$$FR_B = \mu\,(DC1 + DC2 + DW)$$

Where:

FR_B = friction force for a sliding bronze plate bearing, k (N)
μ = coefficient of friction between sliding parts in the bearing. For a lubricated bronze plate bearing, take μ as 0.10.
DC1 = Noncomposite dead load of structural components [BDM 6.6.1.4]
DC2 = Composite dead load of structural components [BDM 6.6.1.4]
DW = Dead load of wearing surface and utilities [BDM 6.6.1.4]

Although the office no longer specifies rocker bearings for new construction, rockers may be used on widening and rehabilitation projects and where steel reinforced elastomeric bearings cannot be used. The friction force for a rocker is computed as follows.

$$FR_R = 0.25P\left(\frac{r}{R}\right)$$

Where:

FR_R = friction force for a rocker bearing, k (N), indicated as T in Figure 6.6.2.18.1
P = dead load of the superstructure, including DC1, DC2, and DW, k (N)
r = radius of the rocker pin, in (mm)
R = radius of the rocker, in (mm)

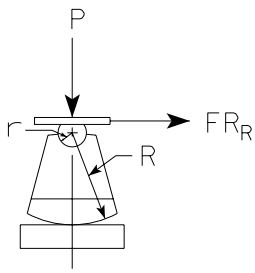

Figure 6.6.2.18.1. Rocker bearing details

6.6.2.18.2 Unbalanced forces

Unbalanced friction forces (FR) will result if there is lack of symmetry in loading and bearing properties along the length of the bridge, as illustrated in Figure 6.6.2.18.2.2.

Office policy is to apply some reasonable friction or thermal force to a pier in all cases, even if symmetry would indicate that the force is zero. Guidelines are given below.

6.6.2.18.2.1 Bridges with integral abutments

Reserved

6.6.2.18.2.2 Bridges with stub abutments

For bridges with stub abutments and piers with fixed or friction-acting expansion bearings, compare factored friction (FR) and factored thermal forces (TU) caused by all of the following rules that are applicable, and select the largest force for each pier:

(a) Thermal force if expansion occurs from a pier with fixed bearings or a central location among piers with fixed bearings
(b) Thermal force based on the force experienced by an adjacent pier
(c) Unbalanced friction force considering friction forces for all expansion bearings in the structure (as in Figure 6.6.2.18.2.2)
(d) Special forces for two-span bridges

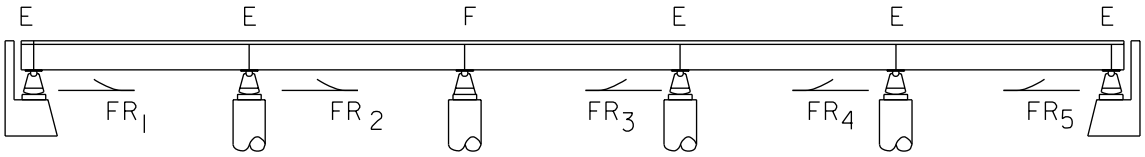

$$\text{Unbalanced Friction Force} = (FR_1 + FR_2) - (FR_3 + FR_4 + FR_5)$$

Figure 6.6.2.18.2.2. Unbalanced friction force at the fixed pier resulting from forces at friction-acting expansion bearings

Table 6.6.2.18.2.2 lists the office policies for typical two- to four-span stub abutment bridges that do not have large variations in pier stiffness. To determine the friction and thermal forces at the piers for a support configuration not listed in the table or for bridges with more than four spans, the designer shall apply rules (a) through (d) and consider any large variations in pier stiffness.

Table 6.6.2.18.2.2. Friction and thermal forces for piers in bridges with stub abutments, fixed bearings, and friction-acting expansion bearings

No. of Spans	Support Configuration(1), Pier Bearing Type	Rule(s): Use the maximum of the forces listed for the number of spans, support configuration, and bearing type.
2	Fixed, R-**F**-R	(c): Unbalanced friction force based on friction forces for all expansion bearings in the structure (2) or (d): Thermal force based on 50% of longer adjacent span length or 50% of equal adjacent span lengths (2)
3	Fixed, R-**F**-**F**-R	(a): Thermal force based on 50% of center span length
3	Fixed, R-R-**F**-R	(b): Friction force for expansion bearings on pier adjacent to center span or (c): Unbalanced friction force based on friction forces for all expansion bearings in the structure
3	Expansion, R-**R**-F-R	(a): Friction force for expansion bearings on the pier
4	Fixed, R-R-**F**-R-R	(b): Larger friction force for expansion bearings on either pier adjacent to the center pier or (c): Unbalanced friction force based on friction forces for all expansion bearings in the structure
4	Expansion, R-**R**-F-**R**-R	(a): Friction force for expansion bearings on the pier
4	Fixed, R-F-**F**-F-R	(b): Thermal force based on the longer adjacent interior span length
4	Fixed, R-**F**-F-**F**-R	(a): Thermal force based on adjacent interior span length

Table notes:

(1) R indicates a stub abutment or a pier with rockers or other friction-acting expansion bearings, F indicates a pier with fixed bearings or a keyed-in diaphragm, and an underline indicates the pier for which the friction or thermal forces apply.

(2) The load factor for these two forces will not be the same. When comparing forces to determine the larger, apply the appropriate load factors. For a skewed pier, compare the factored forces parallel with and perpendicular to the pier cap.

6.6.2.18.3 Skewed pier forces

For expansion piers utilizing bronze sliding plates or steel rockers, the longitudinal friction force (FR) simply is resolved into perpendicular and parallel force components to be applied to the pier.

If the thermal force (TU) controls, apply components of the thermal movement as for a bridge without friction-acting bearings [BDM 6.6.2.12.5].

6.6.2.19 Vessel collision

The vessel collision load, CV, need not be applied to piers in typical Iowa streams. For piers in navigable waterways the designer shall consult with the supervising Section Leader.

6.6.3 Load application to structure

6.6.3.1 Load modifier [AASHTO-LRFD 1.3.2, 3.4.1]

Load factors shall be adjusted by the load modifier, which accounts for ductility, redundancy, and operational importance [AASHTO-LRFD 1.3.2, 3.4.1]. For typical bridges the load modifier shall be taken as 1.0.

6.6.3.2 Limit states [AASHTO-LRFD 3.4.1, 3.4.2]

For a typical pier, the designer shall consider the following load combinations, as applicable [AASHTO-LRFD 3.4.1].

- Strength I, superstructure with vehicles but without wind
- Strength III, superstructure with wind exceeding 55 mph (89 kph)
- Strength IV, superstructure with high dead to live load ratio
- Strength V, superstructure with vehicles and wind at 55 mph (89 kph)
- Extreme Event II, superstructure with reduced vehicles and vehicular collision, ice, or hydraulic events
- Service I, superstructure with vehicles and wind at 55 mph (89 kph)

The Strength IV load combination generally will not be critical except in very large structures or during construction stages. Fatigue need not be investigated for typical reinforced concrete piers or pile bents.

The Service I load combination is intended for deflection, settlement, crack control, and other service-related design. It is not intended for strength design of components of a pier or pier foundations.

Except for unusual situations, such as eccentric loads during staged construction, the designer need not investigate construction load combinations [AASHTO-LRFD 3.4.2].

6.6.3.3 Longitudinal and transverse forces transmitted through bearings

All of the loads applied to the superstructure are transmitted to piers through bearings, bearing guides, anchor bolts, and full-depth keyed-in diaphragms. In addition to vertical loads, the bearings and keyed-in diaphragms transmit BR, $WS_{superstructure\ l}$, WL_l, TU, and FR longitudinal loads and CE, $WS_{superstructure\ t}$, and WL_t transverse loads. How much longitudinal load is transmitted depends on the bearing type--friction-acting bearing, elastomeric bearing, fixed bearing, or keyed-in diaphragm.

6.6.3.3.1 Elastomeric bearings

For the instantaneous loads BR, $WS_{superstructure\ l}$, and WL_l the office assumes that a steel reinforced elastomeric expansion bearing will fully transmit the loads without significant shear deformation or slip. The office assumes that the bearing can transmit longitudinal forces for its pier's average span length but cannot transmit additional longitudinal forces from other bearings.

For load combinations at the strength or service limit state the thermal load, TU, develops based on shear deformation in the bearing for the amount of longitudinal thermal movement in the superstructure. The bearing shall be designed with sufficient friction anchorage or other restraint to prevent slip [BDM 5.7.4.2.1]. Therefore, the bearing will transmit to the pier a thermal force based on the shear deflection in the bearing.

Although a steel-reinforced elastomeric bearing usually is assumed to fully transmit all superstructure transverse forces, the designer should investigate the transverse capacity of the bearing and its anchorage for large transverse loads and other unusual situations.

6.6.3.3.2 Fixed bearings and keyed-in concrete diaphragms

A fixed bearing or keyed-in concrete diaphragm connection is intended to fully transmit all thermal and non-thermal longitudinal and transverse forces from the superstructure to the pier. The fixed bearing or keyed-in diaphragm will transmit longitudinal forces from its pier's average span length plus any additional longitudinal forces that cannot be transmitted by friction-acting bearings.

6.6.3.3.3 Friction-acting bearings

A friction-acting bearing, such as a rocker or sliding bronze plate, cannot transmit more longitudinal force than the friction force that causes the bearing to move. Any amount of force above the friction force therefore must be distributed to fixed bearings in the bridge. In any strength or service limit state load

combination, thermal movement of the superstructure will cause a friction-acting bearing to reach the friction force and, therefore, all non-thermal longitudinal forces in those load combinations must be distributed to fixed bearings in the bridge.

For the extreme event limit state, friction loads are included, but temperature loads are not. The designer should assume that some movement has activated friction forces and analyze the structure accordingly.

Although a friction-acting bearing usually is assumed to fully transmit all transverse forces to the pier, the designer should investigate the transverse capacity of the bearing and its anchorage for large transverse loads and other unusual situations.

6.6.3.4 Longitudinal and transverse forces for non-skewed piers [AASHTO-LRFD 3.8.2]

Longitudinal forces transmitted from the superstructure shall be applied to non-skewed piers based on the type and capacity of bearings as follows.

- **Pier with elastomeric expansion bearings:** Determine the thermal shear force considering the rules for bridges with integral or stub abutments [BDM 6.6.2.12.4.1, 6.6.2.12.4.2], and apply the shear force to the pier. Also apply the non-thermal longitudinal force to the pier.
- **Pier with fixed bearing or keyed-in diaphragm:** Determine the thermal shear force considering the rules for bridges with integral or stub abutments [BDM 6.6.2.12.4.1, 6.6.2.12.4.2, 6.6.2.18.2.2], and apply the shear force to the pier. Also apply the non-thermal longitudinal force to the pier plus any force distributions from piers with friction-acting bearings.
- **Pier with friction-acting expansion bearings:** Because any longitudinal thermal movement of the superstructure will cause the friction force in the bearing, apply the friction force to the pier. Distribute the entire non-frictional longitudinal force equally to other piers with fixed bearings or keyed-in diaphragms.

Applicable longitudinal forces $WS_{substructure\ l}$, WA_l, and IC_l applied directly to a pier shall be determined according to the load articles [BDM 6.6.2.8.2, 6.6.2.7, and 6.6.2.9].

Transverse wind forces from the superstructure, $WS_{superstructure\ t}$ and WL_t, shall be determined for the average span length of the pier. Applicable transverse forces $WS_{substructure\ t}$, WA_t, and IC_t applied directly to a pier shall be determined according to the load articles [BDM 6.6.2.8.2, 6.6.2.7, and 6.6.2.9].

Transverse and longitudinal forces shall be applied to a pier at the elevations given in Table 6.6.3.4. Transverse forces applied above the bridge seat cause overturning moments usually transmitted through varying upward and downward forces on bearings across the pier cap. Longitudinal forces applied above the bearings usually do not transmit moments through bearings and therefore those forces are moved downward to the bridge seat for purposes of pier design.

Table 6.6.3.4. Elevations for application of transverse and longitudinal forces

Force(1)	**Elevation for Force Parallel with Pier Cap (Transverse to Bridge)**	**Elevation for Force Perpendicular to Pier Cap (Longitudinal with Bridge)**
BR	N/A	Bridge seat or elevation of transfer element in a fixed bearing(2)
CE	6 feet (1800 mm) above roadway	N/A
CT	4 feet (1200 mm) above ground	4 feet (1200 mm) above ground
FR	N/A	Elevation of sliding surface or rocker pin or elevation of transfer element in a fixed bearing(2)
IC	Average of high and low water elevations	Average of high and low water elevations
TU	N/A	Bridge seat or elevation of transfer element in a fixed bearing(2)
WA	Center of gravity of pier area exposed to stream flow	Center of gravity of pier area exposed to stream flow
WL	6 feet (1800 mm) above roadway	Bridge seat or elevation of transfer element in a fixed bearing(2)
WS Substructure	Center of gravity of pier area exposed to wind	Center of gravity of pier area exposed to wind
WS(3) Superstructure	Center of gravity of superstructure area exposed to wind	Bridge seat or elevation of transfer element in a fixed bearing(2)

Table notes:

(1) See the abbreviations and notations article [BDM 6.6.1.4].

(2) For a pier with expansion bearings or a keyed-in diaphragm, use the elevation of the bridge seat. For a low profile fixed bearing use the elevation of the contact surface of the curved sole plate. For a fixed shoe bearing use 12 inches (300 mm) above the bridge seat, the approximate elevation of the bearing pin.

(3) There also is a vertical load on the superstructure [AASHTO-LRFD 3.8.2]. See Figure 6.6.3.4.

Forces in strength or service limit states that would be applied to a non-skewed, fixed pier with a full-depth keyed-in diaphragm are shown in Figure 6.6.3.4. In the transverse direction, the CE, WS_t, and WL_t loads are applied at different elevations above the bridge seat because the full-depth diaphragm over the width of the bridge will transmit moments to the pier. In the longitudinal direction, however, the rotation of the full-depth diaphragm at the bridge seat prevents any transmission of moments, and the forces are applied at the bridge seat.

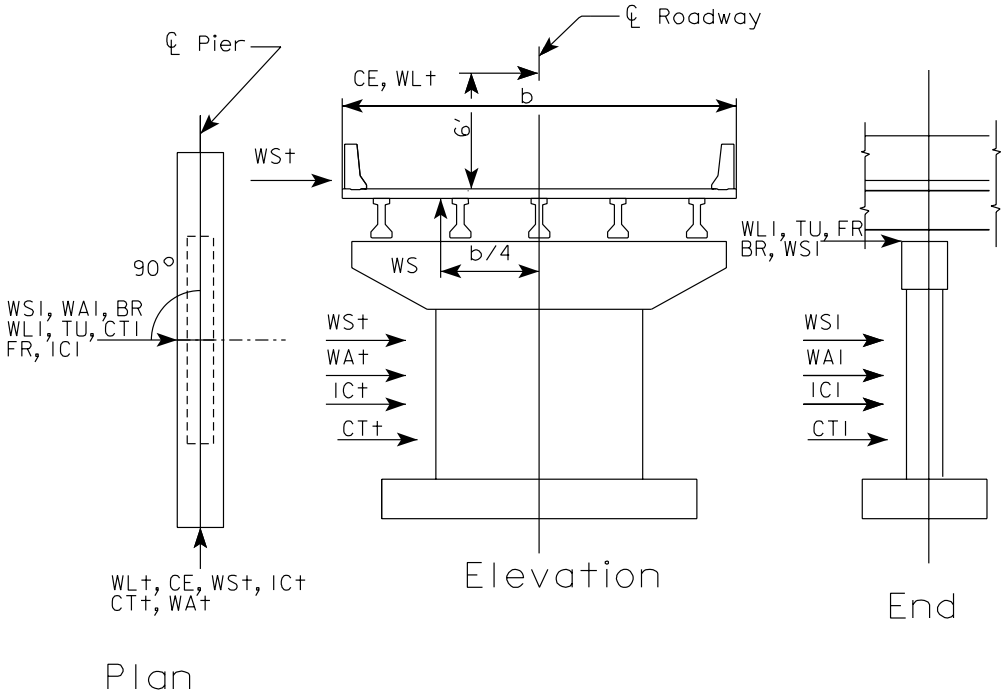

Figure notes:

- See the AASHTO LRFD Specifications for limit states and load factors. Not all forces will be applied in each limit state.
- Refer to Table 6.6.3.4 for more information on elevations of lateral forces.

Figure 6.6.3.4. Elevations for application of transverse and longitudinal forces

6.6.3.5 Parallel and perpendicular forces for skewed piers [AASHTO-LRFD 3.8.2]

For a skewed pier, longitudinal and transverse forces transmitted from the superstructure shall be determined according to the article above [BDM 6.6.3.4]. The direction of longitudinal forces shall be arranged with transverse forces from the superstructure and forces applied directly to the pier ($WS_{substructure}$, WA, and IC) so as to produce maximum resultants parallel with and perpendicular to the pier cap. Each of the two resultants will require a separate load case. Figure 6.6.3.5-1 shows the force directions for a load case that produces the maximum resultant perpendicular to a skewed pier. Reversing the transverse forces would produce the maximum resultant parallel with the pier. Note however that CE and some WA and IC forces will have single directions and should not be reversed.

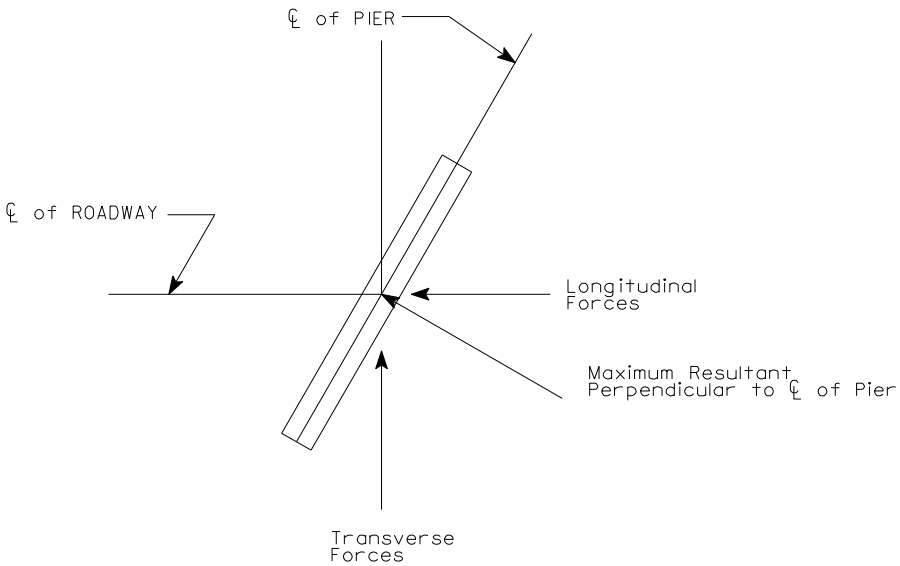

Figure 6.6.3.5-1. Force arrangement for maximum resultant perpendicular to skewed pier

In determining the specific forces to be applied to the pier the designer will need to take the longitudinal and transverse forces for each applicable horizontal superstructure load (BR, CE, $WS_{superstructure}$, WL, TU, and FR) in turn and compute parallel and perpendicular components with respect to the pier. Also, if the pier is not aligned with stream flow the designer will need to compute parallel and perpendicular components for WA and IC.

The components shall be applied at the elevations given in Table 6.6.3.5. Transverse components applied above the bridge seat cause overturning moments usually transmitted through varying downward and upward loads on bearings across the pier cap. Longitudinal components applied above the bearings usually do not transmit moments through bearings and therefore those forces are moved downward to the bridge seat for purposes of pier design.

Table 6.6.3.5. Elevations for application of parallel and perpendicular components

Force(1)	Elevation for Force Parallel with Pier Cap	Elevation for Force Perpendicular to Pier Cap
BR	6 feet (1800 mm) above roadway	Bridge seat or elevation of transfer element in a fixed bearing(2)
CE	6 feet (1800 mm) above roadway	Bridge seat or elevation of transfer element in a fixed bearing(2)
CT	4 feet (1200 mm) above ground	4 feet (1200 mm) above ground
FR	Elevation of sliding surface or rocker pin or elevation of transfer element in a fixed bearing(2)	Elevation of sliding surface or rocker pin or elevation of transfer element in a fixed bearing(2)
IC	Average of high and low water elevations	Average of high and low water elevations
TU	Bridge seat or elevation of transfer element in a fixed bearing(2)	Bridge seat or elevation of transfer element in a fixed bearing(2)
WA	Center of gravity of water pressure on the pier area exposed to stream flow	Center of gravity of water pressure on the pier area exposed to stream flow
WL	6 feet (1800 mm) above roadway	Bridge seat or elevation of transfer element in a fixed bearing(2)
WS Substructure	Center of gravity of pier area exposed to wind	Center of gravity of pier area exposed to wind
WS(3) Superstructure	Center of gravity of superstructure area exposed to wind	Bridge seat or elevation of transfer element in a fixed bearing(2)

Table notes:

(1) See the abbreviations and notations article [BDM 6.6.1.4].

(2) For a pier with expansion bearings or a keyed-in diaphragm, use the elevation of the bridge seat. For a low profile fixed bearing use the elevation of the contact surface of the curved sole plate. For a fixed shoe bearing use 12 inches (300 mm) above bridge seat, the approximate elevation of the bearing pin.

(3) There also is a vertical load on the superstructure [AASHTO-LRFD 3.8.2]. See Figure 6.6.3.5-2.

Forces in a strength limit state that would be applied to a skewed, fixed pier with a full-depth keyed-in diaphragm are shown in Figure 6.6.3.5-2.

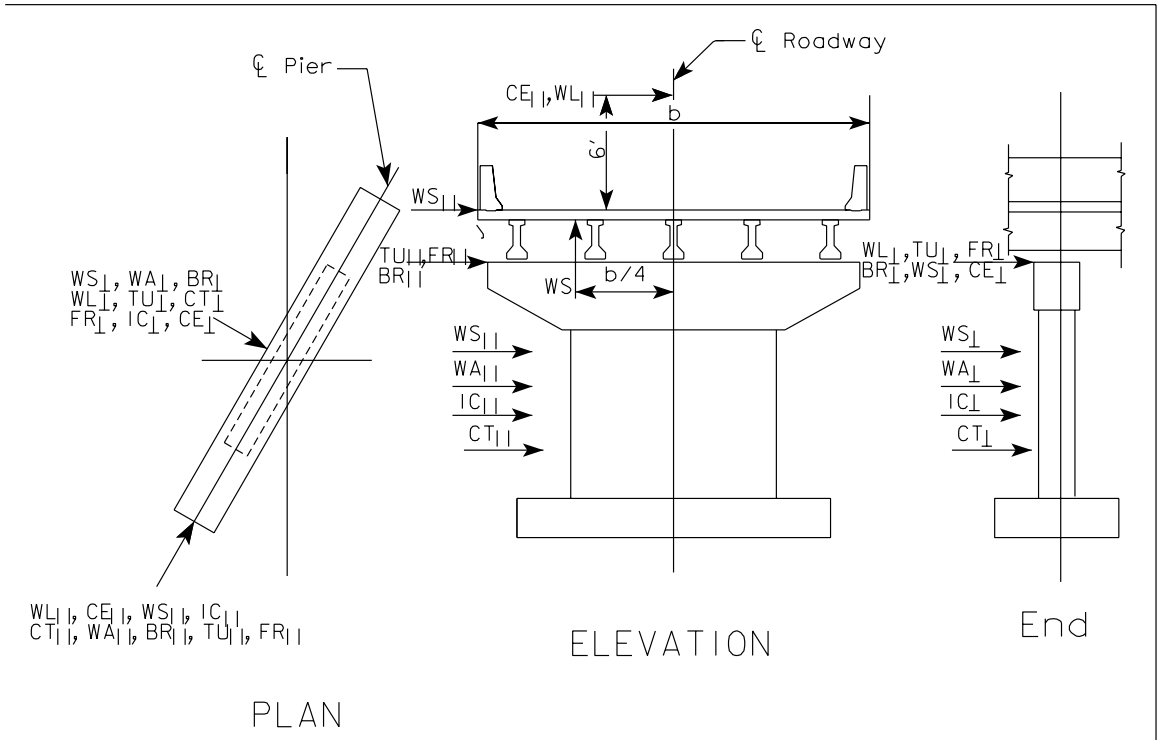

Figure notes:

- See the AASHTO LRFD Specifications for limit states and load factors. Not all forces will be applied in each limit state.
- $BR_{\parallel}$ is to be applied 6 feet above the deck (not as shown).
- Refer to Table 6.6.3.5 for more information on elevations of lateral forces.

Figure 6.6.3.5-2. Elevations for application of parallel and perpendicular components

6.6.4 Pier components and details

6.6.4.1 Frame piers and T-piers

Generally frame piers and T-piers have similar components. Each pier type typically has a cap with cantilever ends, one or more supporting columns, and a footing under each column. In most cases each footing is supported on piles, but footings also may be placed directly on rock or on drilled shafts. Frame piers will differ from T-piers when supported on drilled shafts; columns will be extensions of the drilled shafts. Also, if a frame pier, designed for the vehicular collision force (CT), ~~a frame pier typically will~~ needs a crash strut then it will typically be detailed as shown in Figure 6.6.4.1.

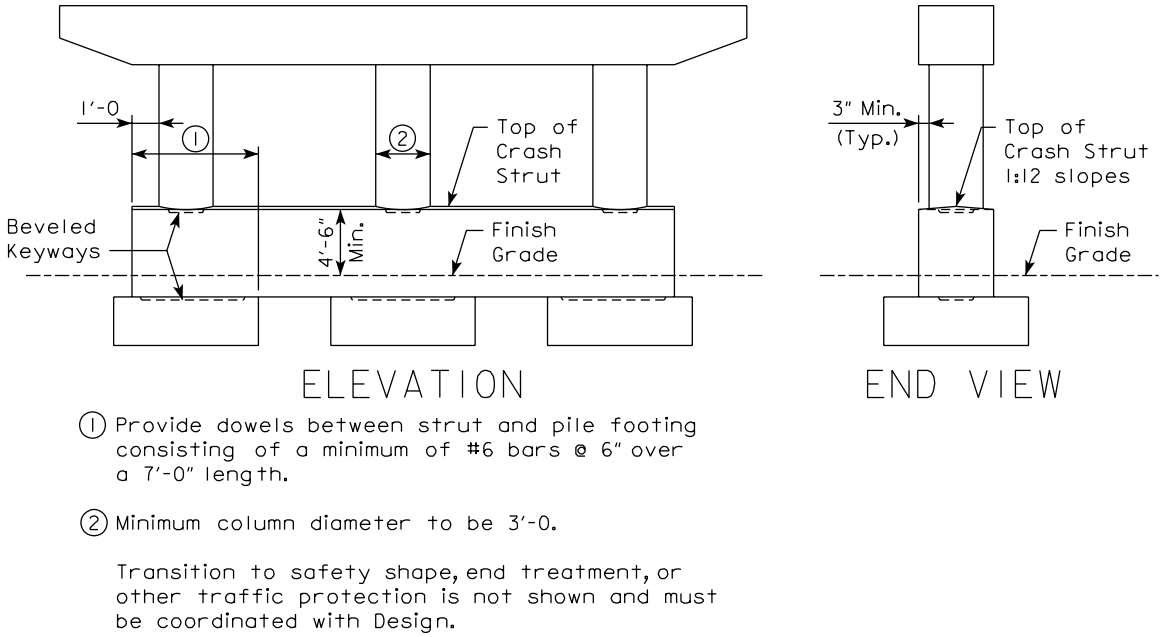

Figure 6.6.4.1. Frame pier with crash strut

The designer should model a pier with gross section properties for all components. In cases where a column is supported by a single drilled shaft the modeling will need to account for the stiffness of the shaft.

For modeling typical pier cap and column structures on footings, the designer should assume fixity at tops of footings. For footing analysis and design the designer should create a second structural model, conservatively assuming the pier columns extend to bottoms of footings. If a column moment is magnified more than 25% at the column bottom, the column magnification factor shall be applied to the moment on the footing.

Superstructure loads that cause overturning effects may be distributed solely through the exterior beams or girders with equal and opposite vertical forces.

For design conditions for which the pier cap depth or footing depth becomes excessive, the designer may specify an increased concrete strength of 5 ksi (35 MPa) at 28 days for all components of a pier. The increased strength requires the approval of the supervising Section Leader and confirmation of the availability of 5 ksi (35 MPa) concrete from the appropriate District Materials Engineer. The 5 ksi (35 MPa) strength requirement shall be noted on the project plans in the following locations:

- Structural concrete bid item on the project general notes and quantities sheet,
- General notes on the project general notes and quantities sheet, and
- Pier notes on the pier details sheet.

For pier components where epoxy coated reinforcing is required, the designer shall specify the epoxy coating and shall not substitute a corrosion inhibitor. Although the use of corrosion inhibitor was permitted in the past, it may have undesirable effects on aggregates and other admixtures and, therefore, the option no longer is acceptable.

In the articles that follow for pier cap, pier column, and pier footing, the analysis and design article gives guidelines for component choices and dimensions, for design method, and for shear and moment. The detailing article gives requirements related to drawing conventions, step dimensions, reinforcing, and finish treatment.

6.6.4.1.1 Pier cap

6.6.4.1.1.1 Analysis and design [AASHTO-LRFD 5.6.3.1, 5.8.3.2, 5.8.3.5, 5.8.3.6, 5.10.8, C5.11.1.2.1, C5.11.1.2.2]

The load and resistance factor design method shall be used for design of pier caps. T-pier cantilevers typically fit the classification of deep beams and thus should be designed by the strut and tie method [AASHTO-LRFD 5.6.3.1] however, until the office has more experience with strut and tie, T-pier cantilevers should be designed by the sectional method. Other portions of typical pier caps also should be designed by the sectional method. The preferred sectional shear design method is the Simplified Procedure for Nonprestressed Sections (Method 1) [AASHTO-LRFD 5.8.3.4.1]. Other sectional shear design procedures may be considered at sections where they produce a more conservative result.

With the sectional method the designer shall provide additional longitudinal reinforcement as required for shear [AASHTO-LRFD 5.8.3.5]. This requirement for additional longitudinal reinforcement substitutes for other reinforcement checks at end supports, points of inflection, and cutoffs in tension zones in the AASHTO Standard Specifications [AASHTO-LRFD C5.11.1.2.1, C5.11.1.2.2]. Typical T-pier and frame pier caps will not need the additional longitudinal reinforcement for two reasons: office policy to carry the maximum longitudinal reinforcement through the entire cap without cutoff and the exception below.

The exception to the requirement for additional longitudinal reinforcement for shear applies “where the reaction force or the load introduces direct compression into the flexural compression face of the member.” The exception applies for direct loading [AASHTO LRFD Figure C5.8.3.5-2] and direct supports not at simple beam ends. For a T-pier cap the exception applies at the support ends of the cantilevers, and for a frame pier cap the exception applies at exterior columns with cantilevers, at interior columns, and at beam bearings at which there is maximum moment (shear changes sign). At these locations the designer need only provide the area of longitudinal reinforcement required for moment. However, the designer is cautioned to be aware of unusual cap designs that warrant additional longitudinal reinforcement at other locations along the pier cap.

Overall dimensions of the cap shall be selected to provide adequate space for beam bearings and anchor bolts, to provide structural capacity, to provide reinforcing anchorage, and to provide for construction operations.

Pier cap heights should be limited to fit the overall dimensions of the substructure components. As a general rule cap heights for T-piers should be limited to 6.0 to 7.5 feet (1.800 to 2.300 m), and cap heights for frame piers should be limited to 3.5 to 5.5 feet (1.100 to 1.680 m).

The cap shall extend horizontally beyond the centerline of the exterior beam a minimum of 2 feet (600 mm) increased by the secant (1/cosine) of the pier skew angle, as indicated in Figure 6.6.4.1.1.1-1. The extension also shall be sufficient to provide at least a 6-bar-diameter length beyond the bearing area of the exterior beam and to provide length for development of top reinforcing steel from the effective face of the column. The overall cap length should be given to the next larger 6-inch (150-mm) increment.

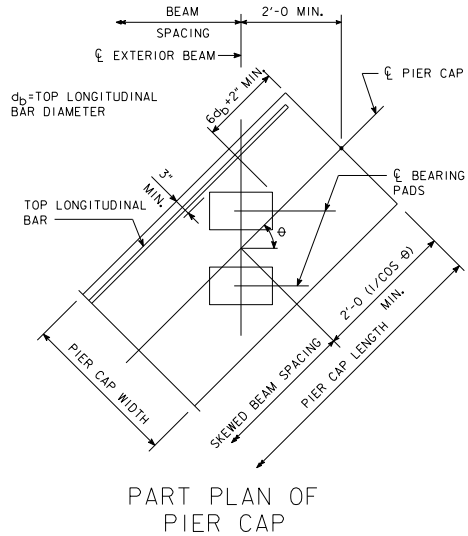

Figure 6.6.4.1.1.1-1. Plan of skewed pier cap end

The cap width shall provide at least 3 inches (75 mm) from each bearing area to the nearest cap edge and at least 6 inches (150 mm) from the center of each anchor bolt to the nearest edge. Office policy is to have at least one fixed pier in the bridge [BDM 6.6.2.7.1], but if there is no fixed pier in the bridge, the clearance to the cap edge shall be increased by 1 to 2 inches (25 to 50 mm) to provide for resetting of bearings.

To aid in avoiding interference between cap and column steel, the cap width should be at least 3 inches (80 mm) greater than the thickness of the supporting columns.

For aesthetic reasons in frame piers the preferred maximum cap depth is the bridge beam depth. Minimum cap depth shall be determined for structural capacity in moment and shear, and the depth should be increased only as necessary for construction and aesthetic considerations.

Pier cap dimensions for the largest dead load, live load, and dynamic load allowance should be used for all piers in a bridge, unless the loads vary significantly from pier to pier.

The critical section for pier cap cantilever moment shall account for shape of the column as indicated in Figure 6.6.4.1.1.1-2. Although the figure shows the column for a T-pier, the same rules apply to the columns in a frame pier.

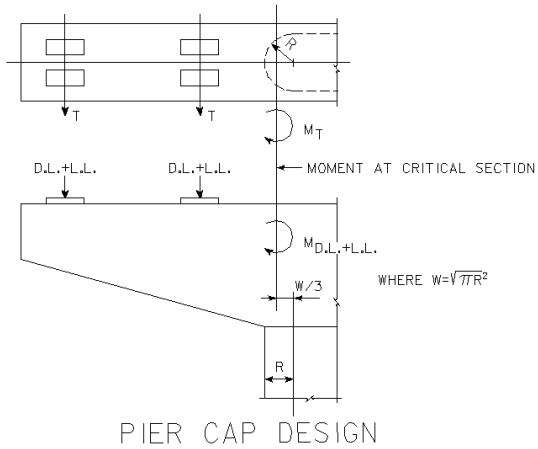

Figure 6.6.4.1.1.1-2. Critical section for pier cap cantilever moment

For T-piers that do not have a keyed-in diaphragm, thermal forces applied through bearings will cause a cantilever moment in the horizontal plane (M_T in Figure 6.6.4.1.1.1-2). The thermal moment in the horizontal plane shall be applied along with moments in the vertical plane.

When using the sectional design model for shear, the designer shall select the critical section using the guidelines in the AASHTO LRFD Specifications [AASHTO-LRFD 5.8.3.2].

Typical frame and T-pier caps are not subjected to significant amounts of torsion, and for typical caps the designer need not design for torsion. For non-typical situations, such as piers located under superstructure expansion joints between unbalanced spans, the designer shall check torsion and shall provide reinforcement for both torsion and shear as required [AASHTO-LRFD 5.8.3.6].

The preferred maximum pier cap stirrup size is #5 (#15), with a minimum spacing of 6 inches (150 mm) for double stirrups. For frame piers, to limit the cap depth, the designer may decrease stirrup spacing to 4 inches (100 mm) for short distances, up to 2 feet (600 mm).

For longer span PPCB bridges with high shear in a pier cap the designer should consider the following options to minimize cap depth and yet provide adequate shear capacity.

- Increase stirrup bar size from #5 (#15) to #6 (#20).
- Consider additional single hooked bar stirrups, but not triple stirrups.
- For T-piers, consider widening the column to eliminate the interior beam reaction on the cantilever.
- Consider widening the cap.
- Consider higher strength concrete.

To control temperature and shrinkage cracking the office requires a maximum stirrup spacing of 12 inches (300 mm) [AASHTO-LRFD 5.10.8]. At locations where only minimum reinforcement is required, such as in a T-pier cap above the column, the designer may use single loop stirrups to provide reinforcement at each face of the pier cap.

If the pier cap length needs to extend beyond the edge of the bridge deck in order to develop the cantilever reinforcing, the designer should hook the cantilever bars to limit the length of the cantilever. In general, however, the office prefers not to hook the cantilever bars.

If at any cross section along a pier cap, the smaller of the width or depth exceeds 4 feet (1.219 m) the cap shall be considered mass concrete, and the designer shall consult with the supervising Section Leader or

the Assistant Bridge Engineer regarding mass concrete notes to be placed on the plans for controlling and monitoring concrete mix temperatures. Regardless of cap thickness the designer shall provide shrinkage and temperature reinforcement as required by the AASHTO LRFD Specifications [AASHTO-LRFD 5.10.8].

Early removal of pier cap formwork allows the contractor to reuse the same forms on multiple piers in a reduced time frame. As such, office policy requires designers to check if the pier cap formwork for typical frame and T-piers can be removed when the concrete strength of the pier cap reaches 2.50 ksi. At a minimum, the loads applied to the pier shall include pier self-weight (DC) and wind on the substructure (WS). Frame piers shall also include in-plane temperature (TU) and shrinkage (SH) forces. Water (WA), ice (IC), vehicle collision (CT) and other load types generally need not be considered. Exterior loads, such as superstructure beam load, are not applied to the pier until the pier concrete reaches its full 28 day strength [IDOT SS 2403.03, N]. At a minimum, the Strength III and Service I limit states shall be investigated for early formwork removal according to the following load combinations:

- Strength III: 1.5*DC + 1.4*WS + 1.0*TU + 1.0*SH
- Service I: 1.0*DC + 0.3*WS + 1.0*TU + 1.0*SH

Particularly for frame piers, designers shall base the pier analysis on the gross moment of inertia and the different elastic moduli of the concrete members. Note that TU and SH loads generate axial forces in the frame pier cap in addition to moments and shears. In general, designers shall not modify the pier design to accommodate early formwork removal. CADD Notes E735A and E735B shall be included on the pier sheets, as needed, in plan sets involving frame and T-piers.

6.6.4.1.1.2 Detailing [AASHTO-LRFD 5.10.3]

Chamfer strips of ¾ inches (20 mm) are required for edges of typical pier caps [IDOT SS 2403.03, B, 5, f].

On drawings, show pier caps looking up-station. Give step elevations to the nearest hundredth of a foot (1 mm), and use these elevations to determine step dimensions. See Figure 6.6.4.1.1.2-1 for the typical step and dimension conventions. In cases where elevations and step dimensions do not fit conveniently on the pier cap drawing, place them in a table.

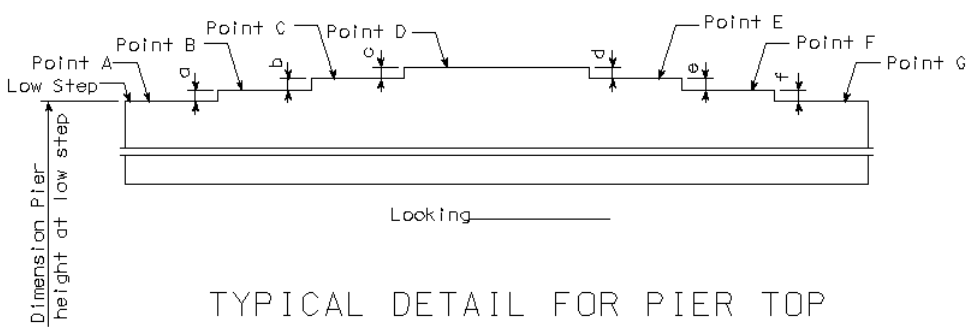

Figure note:
Identify pier top.

Figure 6.6.4.1.1.2-1. Pier cap step elevations

If the difference in bearing seat elevations, Point A to Point G, is greater than 1.5 feet (450 mm) the designer should consider sloping the bottom of the pier cap.

If the step elevation for the next beam bearing is greater than 1¾ inches (50 mm), additional step reinforcing shall be provided as shown in Figure 6.6.4.1.1.2-2.

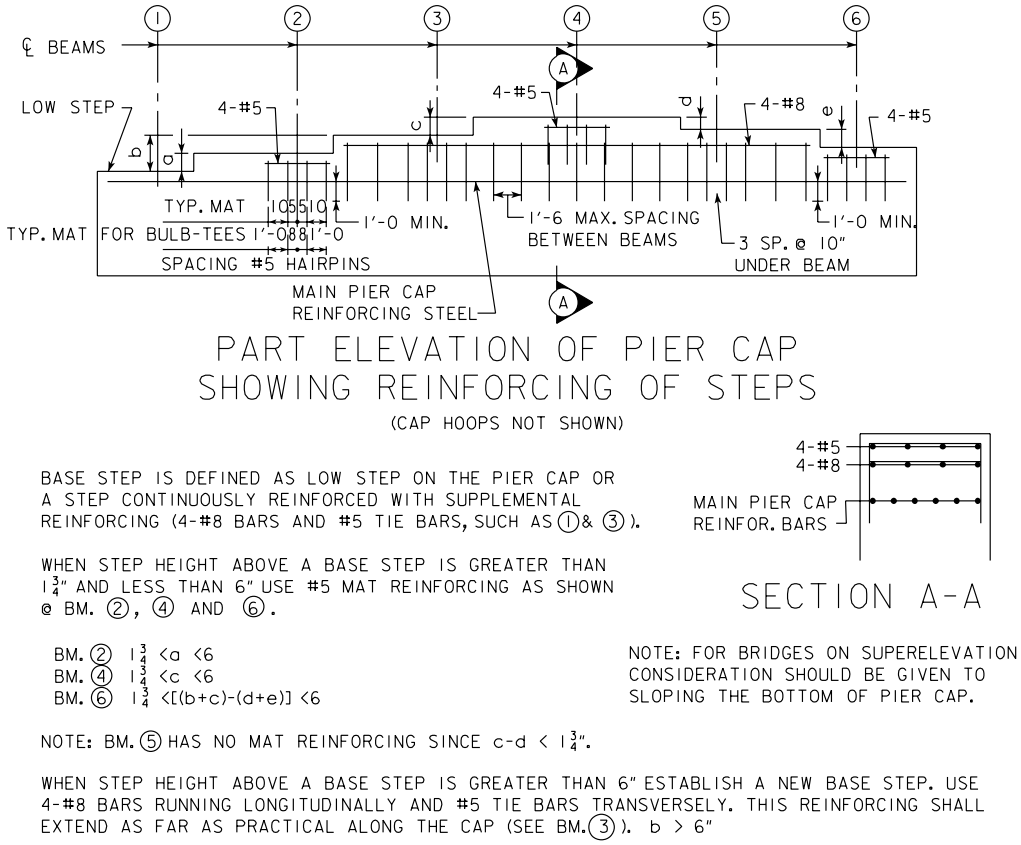

BASE STEP IS DEFINED AS LOW STEP ON THE PIER CAP OR A STEP CONTINUOUSLY REINFORCED WITH SUPPLEMENTAL REINFORCING (4-#8 BARS AND #5 TIE BARS, SUCH AS ① & ③).

WHEN STEP HEIGHT ABOVE A BASE STEP IS GREATER THAN $1\frac{3}{4}$" AND LESS THAN 6" USE #5 MAT REINFORCING AS SHOWN @ BM. ②, ④ AND ⑥.

BM. ② $1\frac{3}{4} < a < 6$
BM. ④ $1\frac{3}{4} < c < 6$
BM. ⑥ $1\frac{3}{4} < [(b+c)-(d+e)] < 6$

NOTE: FOR BRIDGES ON SUPERELEVATION CONSIDERATION SHOULD BE GIVEN TO SLOPING THE BOTTOM OF PIER CAP.

NOTE: BM. ⑤ HAS NO MAT REINFORCING SINCE $c-d < 1\frac{3}{4}$".

WHEN STEP HEIGHT ABOVE A BASE STEP IS GREATER THAN 6" ESTABLISH A NEW BASE STEP. USE 4-#8 BARS RUNNING LONGITUDINALLY AND #5 TIE BARS TRANSVERSELY. THIS REINFORCING SHALL EXTEND AS FAR AS PRACTICAL ALONG THE CAP (SEE BM. ③). $b > 6$"

Figure 6.6.4.1.1.2-2. Step reinforcing for pier caps

Pier cap step locations from beam centerlines are illustrated for fixed piers and expansion piers in Figure 6.6.4.1.1.2-3. Pier cap steps for expansion piers are located midway between beam lines in order to ensure pier diaphragms will not conflict with the step.

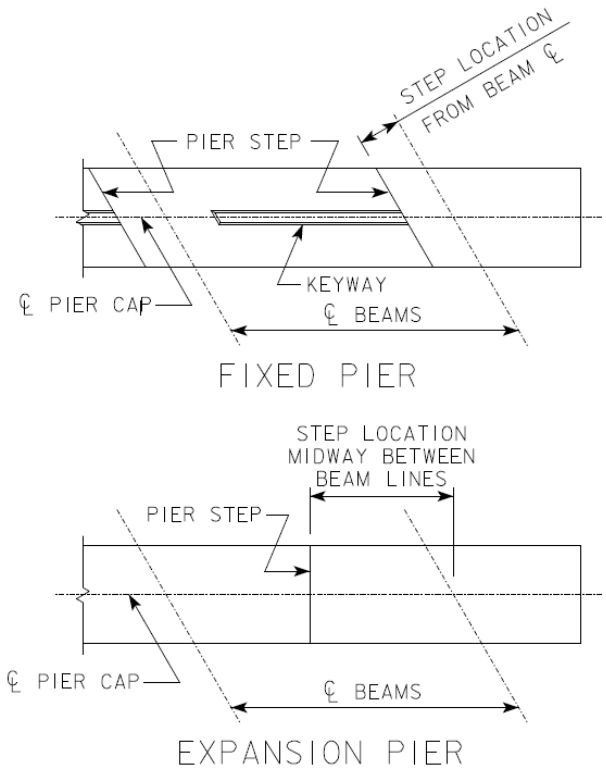

Figure 6.6.4.1.1.2-3. Pier cap step locations

The top of an aesthetic cap often is not stepped, and changes in elevation of bearings are achieved with pedestals. The following are guidelines for reinforcing typical pier pedestals.

- Minimum pedestal height at low step shall be 4 inches (102 mm).
- For pedestals from 4 inches (100 mm) to less than 10 inches (250 mm) in height, use 5m1 and 5n1 bars. See Figure 6.6.4.1.1.2-4.
- For pedestals from 10 inches (250) to less than 18 inches (460 mm) in height, provide a single tie along with the 5m1 and 5n1 bars. See Figure 6.6.4.1.1.2-4.
- For pedestals from 18 inches (460 mm) to 24 inches (610 mm) in height, provide two ties along with the 5m1 and 5n1 bars. See Figure 6.6.4.1.1.2-4.
- Maximum pedestal height shall be 24 inches (610 mm) without special approval from the supervising Section Leader.
- A horizontal construction joint and keyway are required between the pier cap and pedestal.
- Minimum bearing edge distance should meet the same guidelines as for pier caps [BDM Figure 6.6.4.1.1.1-1].
- The preferred set back from the pier cap vertical face is 4 inches (100 mm) with a minimum set back of 2 inches (50 mm).
- If possible the pedestals shall be square, but rectangular shapes may be required for skewed piers.
- The vertical pedestal bars shall be embedded into the cap a minimum of 12 inches (300 mm) past the main cap reinforcing steel and shall be tied and in place prior to the cap concrete placement.
- For fixed bearings the anchor bolts should extend into the cap concrete a minimum of 12 inches (300 mm) for 1¼ inch (32 mm) diameter anchor bolts and 15 inches (380 mm) for 1½ inch (38 mm) diameter anchor bolts.

- For expansion bearings, the anchor bolts do not need to extend into the pier cap and may end in the pedestal concrete; however if guides are used to prevent lateral movement of beams or girders, the anchor bolts for the guides shall meet the same embedment requirements as for fixed bearings in the bullet above.

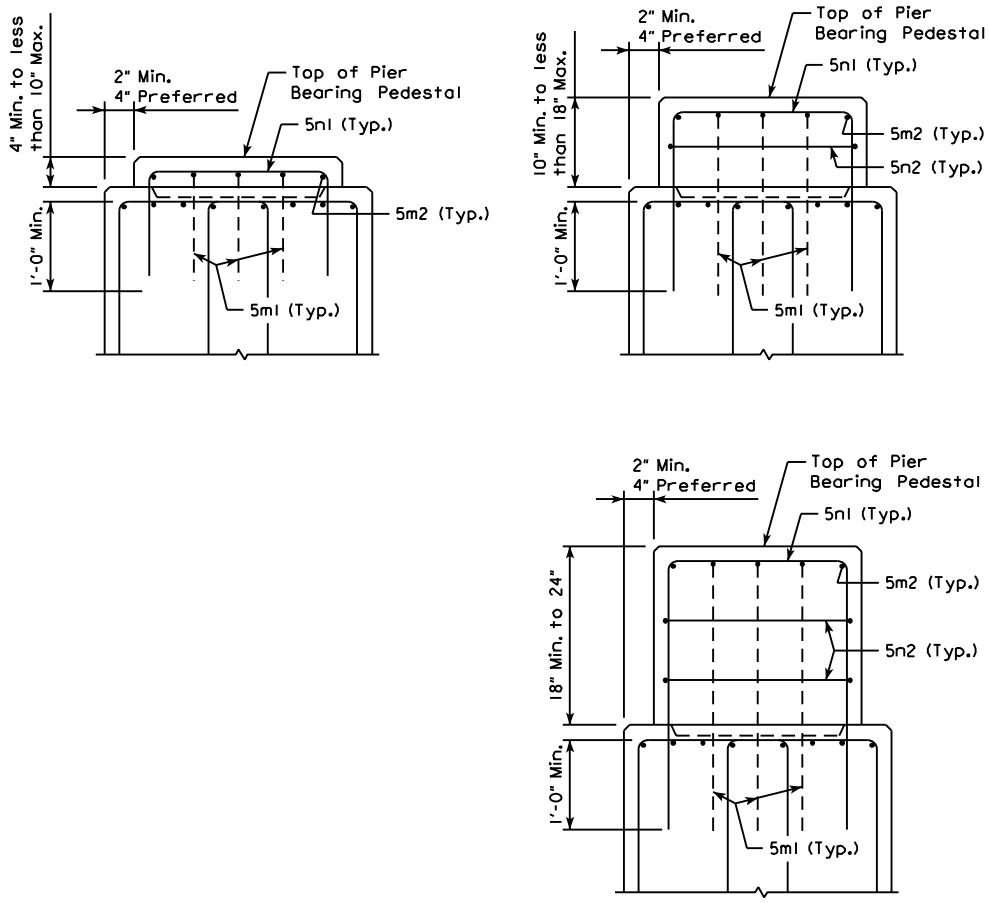

Figure 6.6.4.1.1.2-4. Pier pedestal elevation views for three height ranges

For longitudinal reinforcing bars in pier caps, the preferred minimum clear spacing is 2½ inches (65 mm), between unspliced or spliced bars, but the spacing shall be not less than required by the AASHTO LRFD Specifications [AASHTO-LRFD 5.10.3]. For the usual concrete placement by tremie, provide a 5-inch (125-mm) clear space between center bars of top layers of reinforcing, as shown in Figure 6.6.4.1.1.2-5.

If it is necessary to splice longitudinal bars, allow for the lap splice when determining bar spacing. Consider horizontal and vertical lap splices to achieve the best bar arrangement.

Because of limited space on staged construction projects there may not be adequate length for lap splices of pier cap reinforcement. In cases where lap splices cannot be used the designer shall use coil tie assemblies or mechanical splice assemblies and note the special requirement on the plans.

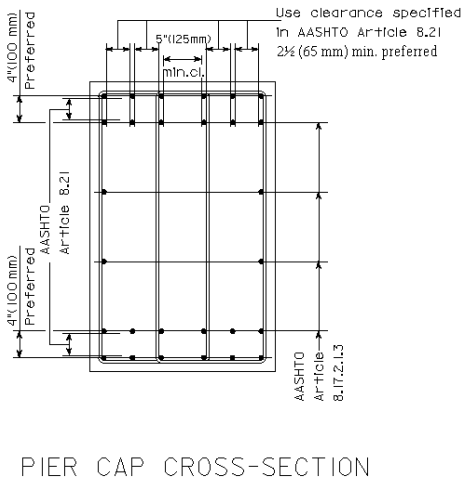

Figure note:

The top bar clearance note should read: Use clearance specified in AASHTO LRFD Article 5.10.3.

Figure 6.6.4.1.1.2-5. Pier cap reinforcing

For stirrup anchorage a longitudinal bar shall be placed in each corner of a pier cap. The office prefers that reinforcing bars placed for moment be placed full length in the cap, without cutoffs. To avoid splices the designer may specify bar lengths to 60 feet (18.300 m).

For detailing pier reinforcing on plans, label the reinforcing in alphabetical order from top to bottom as given in Table 6.6.4.1.1.2.

Table 6.6.4.1.1.2. Pier reinforcing steel designation

Location	Designation
Cap, top and sides	a
Cap, bottom	b
Cap, shear	c
Column, vertical and dowels	d
Column, ties	e
Footing, top	f
Footing, bottom	g
Cap, beam bearing	m & n

If an expansion joint is located above a pier cap, the pier cap concrete shall be sealed to reduce deicer damage, and pier cap reinforcing shall be epoxy coated. The additional requirements shall be noted on the plans.

6.6.4.1.2 Pier column

6.6.4.1.2.1 Analysis and design [AASHTO-LRFD 4.6.2.5, 5.7.4.2, 5.7.4.3, 5.10.8]

Pier columns shall be designed by the load and resistance factor design method.

For analyzing a typical pier and for designing the cap and columns the designer may use a structural model in which the columns are fixed at the tops of the footings. With this model the designer may choose to include pile flexibility.

For frame piers the preferred round column diameters are 30 inches (760 mm), 36 inches (910 mm), 42 inches (1060 mm), and 48 inches (1210 mm). Column spacing should be a minimum of 16 feet (4.880 m), and the designer should attempt to use only three columns for 40 to 44 foot (12.000 to 13.400 m) wide bridges. Column lengths should be equal, unless more than 3 feet (1 m) of additional depth of excavation is required between the shallowest and deepest footing. If excessive excavation may be required the designer shall discuss the situation with the supervising Section Leader.

For T-piers the preferred column shape is rectangular with rounded ends. Columns for T-piers shall be at least 30 inches (760 mm) thick to allow access for workers during construction. Columns with rounded ends should have thicknesses the same as typical round column diameters.

For frame pier columns the designer shall provide the minimum reinforcing required by the AASHTO LRFD Specifications [AASHTO-LRFD Equation 5.7.4.2-3], without reduction in column cross section.

For T-pier columns in Seismic Zone 1 the designer may reduce reinforcing based on an effective cross section [AASHTO-LRFD 5.7.4.2]. The effective cross section area shall be a minimum of 50% of the actual cross section area, and the reinforcement shall be the larger of 1% of the effective cross section or the amount from Equation 5.7.4.2-3 for the effective cross section. Both the effective cross section and the actual cross section must be capable of resisting all LRFD load combinations.

For typical bridges the designer should consider pier columns to be unbraced. Thus the effective length factor, K, will be 2.1 for T-pier columns about each axis, 2.1 for frame pier columns about the axis parallel with the cap, and 1.2 for frame pier columns about the axis perpendicular to the cap [AASHTO-LRFD 4.6.2.5]. When determining column heights for typical bridge piers the designer should assume columns fixed at tops of footings.

To avoid the requirement for a second-order (P-delta) analysis the designer needs to limit the maximum slenderness ratio, $K\ell_u/r$, to 100 [AASHTO-LRFD 5.7.4.3]. However, often when the slenderness ratio exceeds 70 the moment magnifier becomes large enough that a second-order analysis is advisable. To reduce slenderness, secondary effects, and special analysis the designer should discuss the following options with the supervising Section Leader.

(1) Increase the column width.
(2) Substitute a single round column for the pier column(s).
(3) Use a combination of a thicker pier wall and larger columns on top of the wall.

In cases where a column has a large lateral load, such as ~~the vehicular collision force CT or~~ the temperature and shrinkage force in a wide pier, the designer shall check column shear, shear transfer at the top and bottom of the column, and lateral capacity of the foundation. The column will need to have sufficient transverse reinforcement to meet both shear stirrup requirements and column tie requirements. In most cases the designer should consider the need for stirrups in the column first and then add ties if stirrups are too widely spaced. If the transverse reinforcement varies over the column height the designer should not use a continuously wound tie (spiral).

If at any cross section along a pier column, the smaller of the width or depth exceeds 4 feet (1.219 m) the column shall be considered mass concrete, and the designer shall consult with the supervising Section Leader or the Assistant Bridge Engineer regarding mass concrete notes to be placed on the plans for controlling and monitoring concrete mix temperatures. Regardless of column thickness the designer shall provide shrinkage and temperature reinforcement as required by the AASHTO LRFD Specifications [AASHTO-LRFD 5.10.8].

6.6.4.1.2.2 Detailing [AASHTO-LRFD 5.11.2.2.1, 5.11.2.2.2]

If piers are located in either of the following locations, pier column reinforcement shall be epoxy coated:

- Under an expansion joint or
- Within 25 feet (7.620 m) of the edge of the traveled roadway, regardless of roadway type or traffic speed.

Use of corrosion inhibitor in pier columns is not permissible.

When detailing horizontal construction joints such as the joint between column and footing, the designer shall assume the ends of vertical bars rest on the construction joint and determine the bar lengths accordingly.

In most cases the keyway dimensions given on plans should be based on the nominal size of a piece of dimension lumber. If it is necessary to specify an actual size for a keyway, the plan dimensions shall be noted as actual size.

The office prefers that frame pier columns be designed as tied columns but detailed with spirals that have turns spaced at 12 inches (300 mm) and an alternate to substitute ties at 12 inches (300 mm). Spirals and ties shall be #4 (#13) or larger. An extra 1½ turns of the spiral shall be used at the top and bottom. At a spiral splice location, the splice length shall be the Class B splice length required for the bar size, minimum cover, top bar condition, and coating condition given in Table 6.6.4.1.2.2. To hold the spiral in position, four angles, L 7/8 x 7/8 x 1/8 (L 22 x 22 x 3) shall be provided at equal spacing around the column.

Under bent bar details, the tie alternate to the spiral shall be given. The tie size shall match the spiral bar size. The tie lap shall be the Class B splice length required for the bar size, minimum cover, top bar condition, and coating condition given in Table 6.6.4.1.2.2.

Table 6.6.4.1.2.2. Splice length for column spirals and ties

Spiral or Tie Bar Size	Minimum Concrete Cover Inches (mm)	Uncoated Bar Splice Length, Inches (mm)	Epoxy-coated Bar Splice Length, Inches (mm)
#4 (#13)	1.5 (40 mm)	18 (445)	21 (535)
#5 (#16)	1.875 (50 mm) (1)	22 (560)	27 (670)

Table note:

(1) The larger than usually required cover is necessary to reduce splice lengths shown in the table.

The tie lap shall be rotated 90 degrees from one tie to the next as indicated in Figure 6.6.4.1.2.2-1.

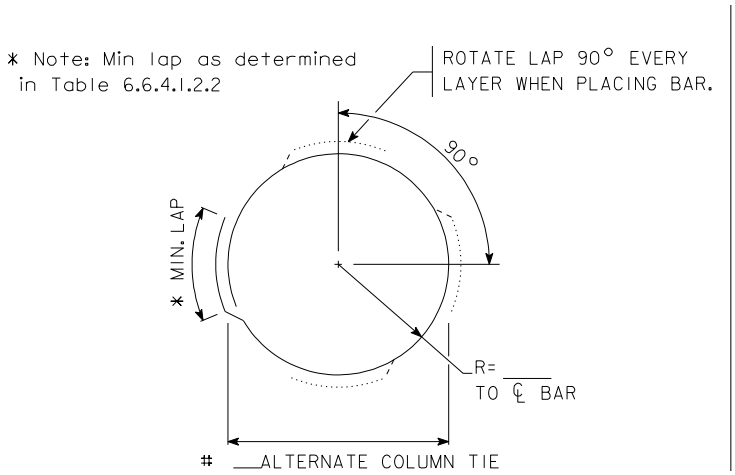

Figure 6.6.4.1.2.2-1. Alternate column tie detail

The end portions of T-pier columns shall be reinforced as shown in Figure 6.6.4.1.2.2-2.

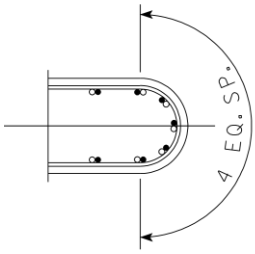

Figure 6.6.4.1.2.2-2. End reinforcing for T-pier columns

In frame piers, the designer may have difficulty achieving sufficient tension development length in the pier cap for large closely spaced epoxy-coated bars extended from the column. In that case the preferred option is to use a reduced development length based on the fraction of area of steel required at the column-pier cap joint divided by the area of steel provided [AASHTO-LRFD 5.11.2.2.2]. At the reduced development length the column bars should terminate 2 inches (50 mm) below the main reinforcing in the top of the pier cap, and the bars shall meet the AASHTO-required compression development length without reduction [AASHTO-LRFD 5.11.2.2.1].

The designer should consider the usual construction process of pre-tying the cap steel and placing this cage as a unit. Any hooked column bars that conflict with the pre-tied cage will disrupt placing of the cage and possibly disrupt placement of concrete in the column by tremie. If hooks are required, a minimum opening of 12 inches (300 mm) shall be provided in the center of the column for a tremie, and the designer should consider 180-degree hooks to increase the opening size. However, the designer should try the reduced development length alternative described above before attempting to use hooked column bars.

6.6.4.1.3 Pier footing

6.6.4.1.3.1 Analysis and design [AASHTO-LRFD 2.6.4.4.2, 5.6.3.1, 5.8.3.4, 5.10.8, 5.11.2.1, 5.13.3.6.3, 6.9.3, 10.5.5.2.1, 10.5.5.3.2]

Pier footings shall be designed by the load and resistance factor method. For typical footings the designer need not use the strut and tie method [AASHTO-LRFD 5.6.3.1].

For analyzing a typical pier foundation and for designing footing and piles the designer may use a structural model in which the pier columns are fixed at the bottom of the footing; however, temperature loads should be based on column fixity at the top of the footing. With this model the designer may choose to include pile flexibility.

The bottom elevation of all footings subject to potential frost heave shall be a minimum of 4 feet (1200 mm) below ground line.

The bottom elevation of a T-pier footing placed in a stream, river, or lake shall be set at a minimum of 6 feet (1.800 m) below the channel elevation.

Typical footing thickness is 3.5 to 4 feet (1.000 to 1.250 m). The designer should limit footing thickness to 5 feet (1.520 m) because of the cracking potential due to heat of hydration in thick footings defined as mass concrete. If the footing thickness needs to be greater than 5 feet (1.520 m) the designer shall provide shrinkage and temperature reinforcement for mass concrete on sides and top of the footing [AASHTO-LRFD 5.10.8] and consult with the supervising Section Leader or Assistant Bridge Engineer

regarding mass concrete notes to be placed on the plans for controlling and monitoring concrete mix temperatures.

Piles subject to scour shall be designed and checked for stability. The Preliminary Bridge Section or preliminary design consultant will provide two scour elevations, design and check, in the hydraulic data on the type, size, and location (TS&L) plan. The analysis that will be required for the two scour conditions is as follows. Note that dynamic load allowance should not be included in the factored loads for the scour checks [BDM 6.2.2.1].

- Pile geotechnical resistance (bearing) at design scour: The designer shall check the factored compression or tension load on a pile at the strength limit state against the factored geotechnical resistance, neglecting any load from the soil scoured away and neglecting all pile friction bearing resistance above the design scour elevation [AASHTO-LRFD 2.6.4.4.2, 10.5.5.2.1]. Nominal unit geotechnical resistances shall be taken from the geotechnical resistance charts [BDM Table 6.2.7-1 and Table 6.2.7-2], and the resistance factor, φ, for compression or tension shall be taken from the appropriate table [BDM Table 6.2.9-1 and Table 6.2.9-2].

- Pile geotechnical resistance (bearing) at check scour: The designer shall check the factored load (γ = 1.0) on a pile at the extreme event limit state against the factored geotechnical resistance, neglecting any load from the soil scoured away and neglecting all friction bearing resistance above the check scour elevation [AASHTO-LRFD 2.6.4.4.2, 10.5.5.3.2]. Nominal unit geotechnical resistances shall be taken from the geotechnical resistance charts [BDM Table 6.2.7-1 and Table 6.2.7-2], and the resistance factor, φ, shall be taken as 1.00 for compression. For tension resistance the resistance factor, φ, shall be taken as 0.80.

- Pile structural resistance at design and check scour: The designer shall check the maximum slenderness ratio of an H-pile in compression for design scour and for check scour against the values in Table 6.6.4.1.3.1-1. The pile length shall be taken as the distance along the pile from an assumed hinge at the bottom of footing to an assumed inflection point 4 feet (1.200 m) below the scour elevation. The effective length factor, K, may be taken as 1.0.

  Structural Resistance Level 4 is not included in the tables below and requires the designer to perform an in-depth structural analysis and design.

  Table 6.6.4.1.3.1-1. Maximum slenderness ratios for axially loaded, Grade 50 H-piles at design scour and check scour

Scour condition	Structural Resistance Level	Maximum slenderness ratio, KL/r [1]
Design	1 or 2	80
Design	3	48
Check	1 or 2	120
Check	3	120

Table note:

(1) Both the HP 12x53 (HP 310x79) and HP 14x73 (HP 360x108) shapes are slender-element sections, meaning that flanges will buckle locally before the member buckles. The slender-element condition for the 14-inch (360-mm) shape has been considered to reduce the maximum slenderness values in the table.

If the slenderness limits in the table above are applied to the available groups of H-piles, the maximum unsupported lengths are as shown in Table 6.6.4.1.3.1-2.

Table 6.6.4.1.3.1-2. Maximum unsupported lengths for axially loaded, Grade 50 H-piles (bottom of footing to 4 feet (1.200 m) below scour elevation)

Pile group	**Unsupported length for pile at Structural Resistance Level – 1 or 2, feet (m)**		**Unsupported length for pile at Structural Resistance Level – 3, feet (m)**	
	Design scour	**Check scour**	**Design scour**	**Check scour**
HP 10 (HP 250)	16.0 (4.890)	24.1 (7.340)	9.6 (2.930)	24.1 (7.340)
HP 12 (HP 310)	19.0 (5.810)	28.6 (8.710)	11.4 (3.480)	28.6 (8.710)
HP 14 (HP 360)	23.2 (7.090)	34.9 (10.630)	13.9 (4.250)	34.9 (10.630)

Table note:

(1) These lengths supersede those given in previous methods memos.

An example of scour analysis and design for an H-pile is given in LRFD Pile Design Examples ~ 2013.

If the design flood inundates part or the entire superstructure the designer shall check a combined vertical and lateral load condition on pier piles at the extreme event limit state as described in the water loads article [BDM 6.6.2.7].

To laterally stabilize pier footings, perimeter piles should be battered at a 1 horizontal to 4 vertical slope provided that there is no interference with site utilities or existing or new pile footings. The batter may be reduced to 1 to 6 to avoid interference. If piles for an adjacent interior column and exterior column footing will interfere at 1 to 6, it is preferable to batter the piles for the exterior footing. Corner piles should be battered in the direction of the bisector of adjacent footing edges. The battered pile pattern for each frame pier column footing or for a T-pier footing should be symmetrical.

For pier footings with reinforcing placed directly above H-pile, pipe pile, or timber pile heads, plans shall include a note requiring that all battered piles be trimmed to a horizontal line to aid in placement of reinforcement. Prestressed concrete piles should not be trimmed.

The pile group supporting a pier footing shall be checked for lateral loading. Each vertical pile may be assumed to have shear resistance, and each battered pile may be assumed to have shear resistance plus the horizontal component of the axial resistance. See the pile resistance guidelines for steel H-piles [BDM 6.2.6.1] and for timber piles [BDM 6.2.6.3].

For design of footings on piles, the loads include axial force from the column, weight of soil above the footing, footing weight, and buoyant effects, if applicable. In addition to axial force there will be a moment about each footing axis. If the column moment is magnified greater than 25% at the column bottom the column magnification factor moment shall be applied to the moment on the footing. The column moments cause variable loads on the piles, and the office uses the pile loads differently but conservatively for each footing design condition.

The designer shall check a pile subject to uplift for adequate anchorage in the footing and adequate friction resistance in the soil. Guidelines for resistances and resistance factors are given for steel H-piles in the pile section of this manual [BDM 6.2.6.1].

Whenever any pile is subject to uplift, top reinforcement is required in the footing. The maximum pile uplift load shall be assumed to be the load for all exterior piles. For each axis the bending moment for design of top reinforcement shall be determined considering only the exterior piles.

Steel in the bottom of a footing is determined with respect to bending at the strength limit state (M_u) about each footing axis. The maximum factored load on any pile (P_u) shall be used as the load on all piles for computing the factored design moment for each axis. If the reinforcement is placed in the usual location above piles, the cracking moment shall be determined for a footing depth of d plus 2 inches (50 mm). If the reinforcement is placed within 6 inches (150 mm) of the bottom of the footing, the cracking moment shall be determined for the full footing depth.

For checking distribution of reinforcement in the bottom of a footing for crack control the designer shall use the controlling service limit state moment and the Class 1 exposure factor [AASHTO-LRFD 5.7.3.4]. If the reinforcement is placed in the usual location above piles, the concrete cover thickness, d_c, measured from the extreme tension fiber to the center of the flexural reinforcement shall be taken as 2 inches (50 mm) for checking distribution of reinforcement. If the reinforcement is placed within 6 inches (150 mm) of the bottom of the footing, d_c shall be determined based on actual location.

The tension development increase factor for top bars [AASHTO-LRFD 5.11.2.1.2] shall be used for bottom reinforcing whenever there is more than 12 inches (300 mm) of concrete placed below the reinforcing. The designer may use hooks if necessary to provide the necessary tension development, but preferred options are smaller bars or additional reinforcing [AASHTO-LRFD 5.11.2.1.3].

Typically the bottom reinforcing mat should be placed 1 inch (25 mm) clear above the tops of piles. Placing the bottom reinforcing mat below the tops of the piles, at 6 inches (150 mm) clear from the bottom of the footing, is an acceptable option only if piles are widely spaced at 5 feet (1.520 m) or more in the footing and soil conditions are such that piles are unlikely to be misplaced.

For punching shear design, the pile load shall be taken as P_u/N (where P_u is the maximum total factored axial load on the footing at the strength limit state and N is the number of piles). The shear resistance shall be determined from the AASHTO LRFD Specifications [AASHTO-LRFD 5.13.3.6.3].

For beam shear design with the sectional design model, the pile load shall be taken as the factored axial resistance of a pile (φP_n), not the factored axial load (P_u). This policy is deliberately conservative because pile loads beyond the critical section for shear will be larger than average. Ordinarily the designer should determine the concrete shear resistance by the sectional design model Method 1 [AASHTO-LRFD 5.8.3.4.1] where the method is applicable. However, the designer shall use Method 2 [AASHTO-LRFD 5.8.3.4.2] if required and may use Method 2 if it provides a significant advantage in minimizing footing thickness.

In usual rectangular footings with piles centered at least 1.5 feet (460 mm) from all footing edges, corner piles are the only piles that need to be checked individually for punching shear and beam shear. At Structural Resistance Level – 2 (SRL-2) the minimum footing depth for a HP 10x42 pile is 32 inches (813 mm) and for a HP 10x57 pile is 36 inches (914 mm). The designer shall investigate shear for any different or unusual conditions such as non-rectangular footings, piles designed to SRL-3 and SRL-4, larger piles, or piles spaced closer to edges than 1.5 feet (460 mm).

6.6.4.1.3.2 Detailing [AASHTO-LRFD 5.13.3.5]

Reinforcing in the top of a footing for resisting uplift forces shall be uniformly distributed across the footing.

For the reinforcing mat in the bottom of the footing, provide 1 inch (25 mm) clear cover above the piles so that the reinforcement can be placed without conflict with the piles.

Reinforcement in the bottom of a T-pier footing shall be uniformly distributed in each direction. Reinforcement in the bottom of other rectangular pier footings shall be uniformly distributed in the longitudinal direction but distributed according to band width in the short direction [AASHTO-LRFD 5.13.3.5].

When detailing the footing to column dowels, limit the length of reinforcing bar extending above the footing to a maximum of 15 feet (4.500 m). Larger bar extensions cause unnecessary difficulty during construction.

6.6.4.1.4 Seal coat

Office policy is to require that pier footings be placed under dry conditions. For most Iowa creeks, streams, and rivers a pier footing can be placed inside a cofferdam with ordinary dewatering equipment.

For large Iowa rivers where the soil at and below the footing excavation is predominantly sand, the bottom of the sheet pile cofferdam may be difficult to seal, or the length of sheet pile required to seal the cofferdam may be too long to be economical. In these situations a concrete seal coat, as illustrated in Figure 6.6.4.1.4, can be used to construct the footing under dry conditions.

A seal coat may also be required on sites where underlying soft rock is porous.

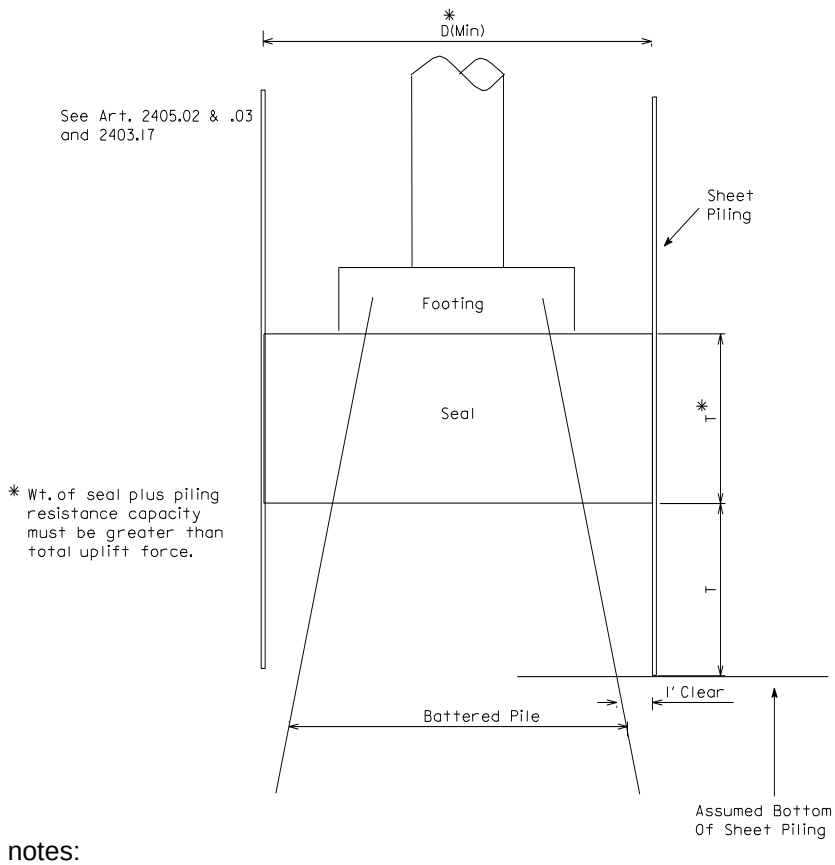

Figure notes:

- In Iowa Department of Transportation *Standard Specifications for Highway and Bridge Construction, Series 2012,* the articles cited in the figure are renumbered 2405.03, A; 2405.03, B; and 2403.03, L.
- Provide at least 3 feet (1.000 m) on all sides between the footing and cofferdam.

Figure 6.6.4.1.4. Seal coat inside cofferdam

Because under normal contracting procedures it is difficult to manage projects that may require seal coats, the office has developed a lump-sum “Excavate and Dewater” bid item. Goals of the item are the following:

- To provide a method of bidding that is fair to the contractor,
- To allow the designer to specify the conditions necessary to ensure the structural integrity of the bridge (cofferdam size, elevation, and length), and
- To eliminate as much negotiating as possible to reduce work orders and paperwork required by field personnel to complete the project.

For sites where a cofferdam is required to construct a footing and the permeability of the soil is in question, the designer shall consult with the supervising Section Leader and the Soils Design Section before designing a seal coat or using the “Excavate and Dewater” bid item.

Although the bridge designer is required to design a seal coat in order to check structural feasibility and adequacy, during construction the contractor is responsible for all aspects of the design of the cofferdam and seal, including sliding, overturning, bursting, shear, bearing capacity, and settlement.

6.6.4.1.4.1 Analysis and design

The following are guidelines for design of a seal coat.

- The minimum seal coat thickness shall be 3 feet (1.000 m).
- The maximum seal coat thickness for typical river conditions should be 6 feet (2.000 m). The supervising Section Leader may approve a greater thickness.
- When determining the size of the cofferdam, provide one foot (300 mm) between the edge of the footing piles and the sheet pile cofferdam [BDM Figure 6.6.4.1.4]. Also, provide at least 3 feet (1.000 m) on all sides between the footing and cofferdam [IDOT SS 2405.03, A, 4].
- Request 25-year stream flow information (Q_{25}) from the Preliminary Bridge Section. Base the elevation of the top of the cofferdam and the thickness of the seal coat on Q_{25}, unless a smaller flow is approved by the supervising Section Leader.
- Check the seal coat at the service limit state. Compare the factored hydraulic load with the factored seal coat weight plus the smaller of (1) the factored bond resistance between piles and seal coat or (2) the factored friction resistance between piles and soil.
- Apply a load factor of 1.1 to the hydraulic load.
- Apply a resistance factor of 1.0 to the seal coat weight.
- Apply a resistance factor of 1.0 to the bond resistance computed from a 0.010 ksi (69 kPa) nominal bond resistance between pile surface area and seal coat. Do not add resistance for pile batter. Do not consider any bond resistance between seal coat and steel sheet piles.
- Apply a resistance factor of 0.5 to friction resistance between pile and soil [BDM 6.2.7]. Do not add resistance for pile batter.
- At the service limit state, the nominal flexural tension resistance in the seal coat shall be 0.250 ksi (1.72 MPa). Checks with load and resistance factors of 1.0 should include uplift on the cantilevered seal coat beyond the pile group and any other condition that causes significant flexural stress. The Iowa DOT standard specifications provide safety by requiring a minimum flexural strength of 0.500 ksi (3.45 MPa) in test beams before the cofferdam can be dewatered [IDOT SS 2405.03, B, 2].
- Because of the uncertainty associated with the seal coat, the pier shall be designed for both situations--with or without the seal coat.
- Include the weight of the seal coat in the DC1 load for the footing piles.

6.6.4.1.4.2 Detailing

For a project with the “Excavate and Dewater” bid item, seal coat details shall be provided on the plans. Also, standard note E832 (M832) [BDM 13.8.2] shall be placed on the pier sheet.

Excavation quantities are not considered in the usual manner when the “Excavate and Dewater” lump-sum bid item is used. Both Class 20 and Class 21 excavation along with the cost of cofferdams, seal coats, pumps, and all other required equipment are included in the lump-sum bid item [OBS SS 2405.05, D]. Therefore, the usual “Class 20” bid item, “Class 21” bid item and the ”Excavation Classification Line” are not required.

6.6.4.2 Pile bents and diaphragm piers

The LRFD guidelines given below shall be used with the LRFD trestle pile bent standard sheet [OBS SS P10L].

6.6.4.2.1 Analysis and design [AASHTO-LRFD 3.6.5, 5.7.4.4, 6.9.5]

Although the designer has the option of a full structural analysis considering loads, moments, temperature movements, and moment magnification for a pile bent, for typical bridges the designer should use the

simplified method for axial load as discussed below. An example for the simplified method and a pile bent constructed with H-piles is given in the commentary [BDM C6.6.4.2.1.1].

The simplified method applies for J-series, H-series, and RS-series bridges and for other similar CCS, PPCB, and rolled steel beam (RSB) bridges if the following conditions are met.

- The bridge length does not exceed 250 feet (76.200 m) for CCS and PPCB bridges, and 350 feet (106.700 m) for RSB bridges.
- The roadway width does not exceed 44 feet (13.411 m).
- The bridge is jointless, with integral abutments and without deck expansion joints.
- All pile bents are fixed without expansion bearings.
- The bridge is straight, without horizontal curvature.
- Stream flow is limited based on office criteria [BDM 6.6.1.1.3].
- The vehicular collision force (CT) does not apply [AASHTO-LRFD 3.6.5].
- Pile bent skew does not exceed 45 degrees.
- The factored temperature movement for half of the full design temperature range [BDM Table 6.6.2.12.2] along the centerline of roadway does not exceed 0.25 inch (6 mm) for CCS and PPCB bridges and 0.45 inch (11 mm) for RSB bridges at a pile bent.
- Maximum cap height is 3 feet (914 mm) for 10-inch and 12-inch (250-mm and 310-mm) piles and 3.5 feet (1.070 m) for 14-inch (360-mm) and larger piles. Step heights do not exceed 1.0 foot (300 mm).
- Piles are embedded 1.0 foot (300 mm) into a monolithic cap or 1.5 feet (450 mm) into a non-monolithic cap.
- Center-to-center pile spacing is not less than the larger of 2.50 feet (762 mm) or 2.5 times the pile size [AASHTO-LRFD 10.7.1.2].
- Pile heights above ground in a pile bent are relatively constant, with maximum ground slope of 1:10 along the bent.

For the simplified method the designer needs to check the following three design conditions at the strength limit state for the sum of the factored dead load, factored live load, and factored dynamic load allowance.

- Structural capacity of the piles above ground: The designer shall check this axial compression capacity at the strength limit state using the guidelines and tables for specific pile types in subarticles below and, if applicable, with consideration of design scour for the H-dimension. It is intended that prestressed concrete piles and concrete-filled steel pipe piles of the same size have equivalent heights, soil penetrations, and resistances. The nominal resistances in Tables 6.6.4.2.1.2 and 6.6.4.2.1.3 result in the same factored resistances when the appropriate phi-factors are applied.
- Structural capacity of the piles in the ground: For steel H-piles the designer shall check this capacity at Structural Resistance Level -1 at the strength limit state using the guidelines in the pile section [BDM 6.2]. For prestressed concrete or steel pipe piles the designer shall check this capacity at the strength limit state using the AASHTO LRFD Specifications [AASHTO-LRFD 5.7.4.4, 6.9.5].
- Geotechnical capacity of the piles: The designer shall use the LRFD procedures at the strength limit state given in the pile section [BDM 6.2] and, if applicable, consider design scour by neglecting any friction bearing above the scour line. Driving resistance given on plans shall include the driving resistance in the scourable soil layers.

For a full structural analysis the designer needs to check the same three conditions, but the structural capacity of the piles above ground needs to be analyzed with a model that considers geotechnical characteristics of the site, the pile bent, and the bridge superstructure.

The weight of concrete encasement for an individual steel H-pile shall be included in the load to the pile, and the weight of full pile bent encasement shall be included in the load to the pile group. The dynamic load allowance (IM) shall be applied to piles above ground and, as a conservative simplification, on the portion of the piles below ground.

Although there often is more than one option for pile type, prestressed concrete and steel pipe piles should not be used in soils with relatively high blow counts. The office has limited recent experience with these pile types in pile bents and, therefore, can only offer the following advice, which also is given in the geotechnical resistance charts [BDM 6.2.7]. The designer should avoid using prestressed concrete piles in any soil with consistent blow counts above 30 to 35 or steel pipe piles in any soil with consistent blow counts above 40. If there is any question about the use of prestressed concrete or steel pipe piles the designer shall consult with the Soils Design Section and Office of Construction.

Driving points may be needed for piles in some soil conditions. The designer shall verify the need for driving points with the Soils Design Section.

For continuous concrete slab (CCS) bridges a monolithic cap is the preferred detail for a pile bent or diaphragm pier. In unusual situations in which the piles or substructure may be overstressed by thermal and shrinkage forces, the designer may use a non-monolithic cap. Typical situations that may require a non-monolithic cap are the following:

- A pile bent that has large variations in pile length,
- A fully encased, skewed pile bent, and
- A longer than usual bridge with more than three spans.

A non-monolithic cap also may be required for:

- Diaphragm piers in skewed bridges, and
- Diaphragm piers keyed into rock.

For pile bents, pile cap reinforcing shall be checked assuming limited damage to piles under two conditions: (1) end pile removed with cap as a cantilever, and (2) interior pile removed with cap as restrained beam. For these checks the load factor for HL-93 live load and dynamic load allowance shall be taken as 1.35.

The following guidelines apply to fully encased pile bents.

- To provide for minor misalignment of piles the encasement shall have a minimum thickness of 22 inches (560 mm) for HP-10 (HP-250) piles, a minimum thickness of 24 inches (610 mm) for HP-12 (HP-310) piles, and a minimum thickness of 26 inches (660 mm) for HP-14 (HP-360) piles.
- The minimum distance from centerline of battered end piles to edge of encasement shall be 18 inches (460 mm).
- When the designer chooses a non-monolithic cap due to movements due to temperature, shrinkage, and skew, the encased pile bent shall have a pier cap keyed to the bottom of the reinforced concrete slab.
- For skewed non-monolithic caps, the ends of beveled keyways should be lined with 1-inch (25-mm) thick strips of ~~preformed~~ resilient joint filler to allow for movement of the superstructure along the skew.

6.6.4.2.1.1 Steel H-piles

Based on a revised general study of the pile bent design conditions for J-series CCS bridges and H-series PPCB bridges [See the Commentary Appendix for Technical Documents, “Pile bents with steel H-piles.”] and additional study of RS-series rolled steel beam (RSB) bridges, the height and nominal resistance values in Table 6.6.4.2.1.1 were determined for the simplified method check of the pile bent above ground. The values in the table for steel H-piles are based on the following conditions.

- Pile webs are parallel with centerline of cap.
- Piles are embedded 1.0 feet (300 mm) into a monolithic cap or 1.5 feet (450 mm) into a non-monolithic cap. Piles are assumed to be partially fixed in both directions at the bottom of a monolithic cap for CCS bridges and fixed in both directions at the bottom of a non-monolithic cap. However, even though piles are assumed to be fixed at a non-monolithic cap, because of compressible material at the top of the cap in the joint with the CCS and PPCB superstructure, a non-monolithic cap is assumed to be partially fixed out-of-plane where it meets the

superstructure. For RSB bridges, the top of a non-monolithic cap is assumed to be pinned out-of-plane and fixed in-plane.

- Individual pile encasement extends 3 feet (1.000 m) below ground or stream bed [BDM 6.6.4.2.2]. when design scour extends below stream bed, the additional depth shall be considered when comparing pile height with the maximum permissible height (H) in Table 6.6.4.2.1.1.
- HP-10 (HP-250) piles are assumed fixed at a depth of 6 feet (1.829 m), HP-12 (HP-310) piles at 7 feet (2.134 m), and HP-14 (HP-360) piles at 8 feet (2.438 m). Soil has a minimum standard penetration test N_{60}-value of 3 if clay or 5 if sand.
- Individual pile encasement reduces compression buckling length during construction but is nonstructural in service.

Table 6.6.4.2.1.1. Permissible height (H), minimum soil penetration, and nominal axial resistance for selected Grade 50 H-piles in pile bents

H-pile section	Maximum height, H (1), feet (m)		Recommended minimum height, H (2), feet (m)	Minimum soil penetration (3) feet (m)	Nominal Resistance, P_n (4) kips (kN)
	Monolithic cap	Non-monolithic cap			
HP 10x42 (HP 250x62)	19 (5.791)	15 (4.572)	7 (2.134)	18 (5.486)	154 (685)
HP 10x57 (HP 250x85)	19 (5.791)	16 (4.877)	7 (2.134)	18 (5.486)	208 (925)
HP 12x53 (HP 310x79)	23 (7.010)	20 (6.096)	9 (2.743)	21 (6.401)	192 (854)
HP 14x73 (HP 360x108)	28 (8.534)	25 (7.620)	13 (3.962)	24 (7.315)	265 (1178)
HP 14x89 (HP 360x132)	29 (8.839)	26 (7.925)	13 (3.962)	24 (7.315)	324 (1441)

Table notes:

(1) H is defined as the height from underside of pile bent cap to ground line or stream bed (with design scour, if applicable) [BDM 6.6.4.2.2].
(2) As the pile becomes shorter it becomes stiffer and attracts more moment but has greater axial capacity. Consult with the supervising Section Leader before using a lesser height.
(3) This distance from ground line or stream bed to bottom of pile is required for the pile to have a point of fixity. If the pile has less embedment it may fail by “fence-post” action.
(4) These nominal resistances are intended to be used with φ_c = 0.70. They were calculated at Structural Resistance Level - 1 (SRL-1) from 1.45*6 ksi*A/0.7, which simplifies to 12.43*A (and then were converted to metric).

An example of structural design for a pile bent constructed with H-piles and design by the simplified method is given in the commentary for this article [BDM C6.6.4.2.1.1]. Two complete pile bent examples for concrete-filled pipe pile and prestressed concrete piles are given in LRFD Pile Design Examples ~ 2013.

6.6.4.2.1.2 Prestressed concrete piles

Based on a general study of the pile bent design conditions for J-series CCS bridges and H-series PPCB bridges [See the Commentary Appendix for Technical Documents, “Pile bents with prestressed concrete piles.”], the height and nominal resistance values in Table 6.6.4.2.1.2 were determined for the simplified

method check of the pile bent above ground. The values in the table for prestressed concrete piles are based on the following conditions.

- Piles are rotated to the bent skew so that two opposite faces of the pile are parallel with the cap.
- Piles are embedded 1.0 feet (300 mm) into a monolithic cap or 1.5 feet (450 mm) into a non-monolithic cap. Piles are assumed to be partially fixed in both directions at the bottom of a monolithic cap for CCS bridges and fixed in both directions at a the bottom of a non-monolithic cap. However, even though piles are assumed to be fixed at a non-monolithic cap, because of compressible material at the top of the cap in the joint with the CCS and PPCB superstructure, a non-monolithic cap is assumed to be partially fixed out-of-plane where it meets the superstructure.For RSB bridges, the top of a non-monolithic cap is assumed to be pinned out-of-plane and fixed in-plane.
- When design scour extends below stream bed, the additional depth shall be considered when comparing pile height with the maximum permissible height (H) in Table 6.6.4.2.1.1.

Table 6.6.4.2.1.2. Permissible height (H), minimum soil penetration, and nominal axial resistance for prestressed concrete piles in pile bents

Square pile size, inches (mm)	Maximum height, H, feet (m) (1)	Recommended minimum height, H, feet, (m) (1), (2)	Minimum soil penetration feet (m) (3)	Nominal axial resistance, P_n kips (kN) (4)	
14 (356)	18 (5.486)	7 (2.134)	24 (7.315)	127 (564)	
16 (406)	22 (6.706)	7 (2.134)	27 (8.230)	146 (649)	

Table notes:

(1) H is defined as the height from underside of pile bent cap to ground line or stream bed (with design scour, if applicable), depending on the ground feature at the pile bent.
(2) As the pile becomes shorter it becomes stiffer and attracts more moment but has greater axial capacity. Consult with the supervising Section Leader before using a lesser height.
(3) This distance from ground line or stream bed to bottom of pile is required for the pile to have a point of fixity. If the pile has less embedment it may fail by “fence-post” action.
(4) These nominal resistances are intended to be used with $\varphi_c = 0.75$.

6.6.4.2.1.3 Concrete-filled steel pipe piles

Based on a general study of the pile bent design conditions for J-series CCS bridges and H-series PPCB bridges [See the Commentary Appendix for Technical Documents, “Pile bents with concrete-filled steel pipe piles.”], the height and nominal resistance values in Table 6.6.4.2.1.3 were determined for the simplified method check of the pile bent above ground. The values in the table for concrete-filled pipe piles are based on the following conditions.

- Piles are embedded 1.0 feet (300 mm) into a monolithic cap or 1.5 feet (450 mm) into a non-monolithic cap. Piles are assumed to partially fixed in both directions at the bottom of a monolithic cap for CCS bridges and fixed in both directions at the bottom of a non-monolithic cap. However, even though piles are assumed to be fixed at a non-monolithic cap, because of compressible material at the top of the cap in the joint with the CCS and PPCB superstructure, a non-monolithic cap is assumed to be partially fixed out-of-plane where it meets the superstructure. For RSB bridges, the top of a non-monolithic cap is assumed to be pinned out-of-plane and fixed in-plane.
- When design scour extends below stream bed, the additional depth shall be considered when comparing pile height with the maximum permissible height (H) in Table 6.6.4.2.1.1.

Table 6.6.4.2.1.3. Permissible height (H), minimum soil penetration, and nominal resistance for concrete-filled steel pipe piles in pile bents

Pipe diameter inches (mm) (1)	Maximum height, H, feet (m) (2)	Recommended minimum height, H, feet, (m) (2), (3)	Minimum soil penetration feet (m) (4)	Nominal axial resistance, P_n kips (kN) (5)	
14 (356)	18 (5.486)	7 (2.134)	24 (7.315)	119 (529)	
16 (406)	22 (6.706)	7 (2.134)	27 (8.230)	137 (609)	

Table notes:

(1) Minimum wall thicknesses are Grade 2-0.219 inch and Grade 3-0.203 inch for 14-inch piles and Grade 2-0.230 inch and Grade 3-0.230 inch for 16-inch piles.
(2) H is defined as the height from underside of pile bent cap to ground line or stream bed (with design scour, if applicable), depending on the ground feature at the pile bent.
(3) As the pile becomes shorter it becomes stiffer and attracts more moment but has greater axial capacity. Consult with the supervising Section Leader before using a lesser height.
(4) This distance from ground line or stream bed to bottom of pile is required for the pile to have a point of fixity. If the pile has less embedment it may fail by “fence-post” action.
(5) These nominal resistances are intended to be used with $\varphi_c = 0.80$.

6.6.4.2.2 Detailing

Cap steel detailed on standard sheets [OBS SS P10L] shall be used wherever pile head embedment is less than 1.5 feet (460 mm). The cap steel detailing in the J-series and H-series standard bridge plans illustrates how the steel is to be placed.

Where encasement is required for individual piles or for an entire bent the encasement shall extend as follows:

- If the bridge does not cross a stream, the encasement shall extend 3 feet (1.000 m) below ground elevation at the bent.
- If the bridge crosses a stream, the encasement shall extend 3 feet (1.000 m) below stream bed elevation unless the extension is not practical. The additional extension is intended to account for channel migration and degradation even if the bent is not in the stream. If the extension exceeds 6 feet (2.000 m) below ground at the bent the extension may not be practical, and the designer shall discuss the extension with the supervising Section Leader.