TABLE OF CONTENTS ~ ABUTMENTS

6.5 Abutments
6.5.1 General
6.5.1.1 Policy overview
6.5.1.1.1 Integral
6.5.1.1.2 Stub
6.5.1.2 Design information
6.5.1.3 Definitions
6.5.1.4 Abbreviations and notation
6.5.1.5 References
6.5.2 Loads
6.5.2.1 Dead
6.5.2.2 Live
6.5.2.3 Dynamic load allowance
6.5.2.4 Centrifugal
6.5.2.5 Braking force
6.5.2.6 Earth pressure
6.5.2.7 Live load surcharge
6.5.2.8 Earthquake
6.5.3 Load application
6.5.3.1 Limit states
6.5.3.2 Integral abutments
6.5.3.3 Stub abutments
6.5.4 Abutment analysis, design, and detailing
6.5.4.1 Integral abutments
6.5.4.1.1 Analysis and design
6.5.4.1.2 Detailing
6.5.4.2 Stub abutments
6.5.4.2.1 Analysis and design
6.5.4.2.2 Detailing
6.5.4.3 Wing walls
6.5.4.3.1 Analysis and design
6.5.4.3.2 Detailing

6.5 Abutments

6.5.1 General

Abutments for typical Iowa bridges are founded on piles driven to bearing in soil or rock, on drilled shafts, or on footings notched into rock. In addition to this series of articles, the designer should review information for the applicable foundation type: piles [BDM 6.2], drilled shafts [BDM 6.3], or spread footings [BDM 6.4]. The designer also should review the pier section [BDM 6.6] for load policies that affect abutments.

6.5.1.1 Policy overview

Abutments generally serve three purposes: to provide support for the bridge superstructure, to retain the road embankment, and to provide support for the end of the approach pavement. For support of typical superstructures the office selects between two types of abutments: integral and stub. Integral abutments with jointless bridge decks are preferred wherever feasible.

Integral abutments are placed on vertical piles with sufficient flexibility so that the superstructure can contract with shrinkage and expand or contract with changes in temperature. Stub abutments placed on

piles, drilled shafts, or footings on rock are relatively fixed in position, and superstructure movements must be accommodated with expansion bearings at the abutments and joints in the bridge deck. The standard integral and stub abutments retain soil only near the top of shallow-slope embankments and are not suitable for steep embankments.

For ordinary pretensioned prestressed concrete beam (PPCB), continuous welded plate girder (CWPG), continuous concrete slab (CCS), and rolled steel beam (RSB) bridges without special aesthetic requirements, the office prefers integral abutments supported on vertical steel H-piles or timber piles. To facilitate the design of typical PPCB bridges the office has prepared integral abutment designs with H-piles for skews from 0 to 30 degrees and makes those designs available on standard sheets. The standard sheet designs are applicable for bridge lengths and skews within the limits covered in this manual [BDM 6.5.1.1.1] and are based on the performance of Iowa integral abutments. Although the dimensions, reinforcing, details, and notes on the standard sheets generally are suitable for use, the designer shall check the information for each project and provide corrected and completed sheets for each bridge plan set. Use of integral abutments beyond the stated limits in this manual [BDM 6.5.1.1.1] requires approval of the Chief Structural Engineer.

In most cases where abutment foundations are placed directly on rock or are placed on drilled shafts, the designer should select stub abutments.

For ordinary PPCB bridges for which integral abutments are not feasible due to bridge length, end span length, or skew, the office provides standard sheets for stub abutments supported on H-piles to be used with expansion bearings and deck expansion joints. The standard stub abutments have two rows of piles, one row driven vertically and one row battered inward at a 1 horizontal to 4 vertical slope. Although the dimensions, reinforcing, details, and notes on the standard sheets generally are suitable for use, the designer shall check the information for each project and provide corrected and completed sheets for each bridge plan set.

For the typical Iowa bridge there is adequate space for a relatively shallow embankment slope, and the abutment will need to retain soil only near the top of the embankment. However, when clearances or site conditions require a steep elevation change at the end of the bridge, the bridge abutment must be designed to retain a considerable amount of embankment soil. In all cases the embankment stability needs to be considered along with the requirements for support of the bridge superstructure and approach pavement.

Although the office follows AASHTO LRFD Specifications, the office interprets the basic specifications when designing abutments and specifies rules for detailing of abutment components. Longitudinal and transverse loads need to be coordinated with the corresponding loads for piers, and the designer shall consult the pier articles in this manual [BDM 6.6.2 and 6.6.3] to ensure that loading is correct for the entire bridge substructure.

This series of articles on abutments covers most typical designs but does not cover special bridge designs for signature bridges or long-span bridges. The designer is cautioned that steep ground elevation changes, aesthetic requirements, and other factors may require abutments designed differently from the standard abutments.

6.5.1.1.1 Integral

In order to minimize construction and maintenance costs the office prefers integral abutments.

Based on common Iowa soils, research conducted by Iowa State University under Iowa DOT Projects HR-273 and HR-399, and parameter studies [BDM C6.5.1.1.1], the office has established the bridge length limits for use of standard integral abutments given in Tables 6.5.1.1.1-1 for PPCB bridges and 6.5.1.1.1-2 for CWPG bridges. The length limits and pile structural resistances in the tables are based on the following conditions.

- The bridge has approximately parallel abutments and piers at skews not exceeding 45 degrees.

- The bridge is straight or horizontally curved with straight beams or girders.
- The bridge is horizontally curved with curved steel girders subject to the following additional limits:
    - The minimum curve radius is 900 feet (274.320 m).
    - The maximum bridge width is 44 feet (13.410 m) from gutter line to gutter line.
- Integral abutments are placed at both ends of the bridge. If a working integral abutment is feasible at only one end of a bridge, the maximum length for the bridge shall be one-half the limit in the table, with no change in maximum end span length.
- All abutment piles for typical projects are HP 10x57 (HP 250x85) of ASTM A 572/A 572M Grade 50 (345) steel. If HP 10x57 piles have insufficient structural resistance the designer may substitute an alternate shape with $b_f/2t_f \leq 10.5$: HP 12x74 (HP 310x110), HP 12x84 (HP 310x125), HP 14x102 (HP 360x152) if available, or HP 14x117 (HP 360x174). The resistance for the alternate shape shall be extrapolated based on relative cross sectional area of alternate pile with respect to the area of an HP 10x57 (HP 250x85).
- For bridges with skews greater than 30 degrees, piles shall be oriented for weak axis bending with pile webs perpendicular to centerline of roadway. At lesser skews, pile webs should be oriented parallel with the abutment.
- The nominal structural resistance values in the table have been limited to Structural Resistance Level – 2 [BDM Table 6.2.6.1-1]. (The overall abutment pile design also may be limited by geotechnical resistance.)
- All abutment piles for bridges longer than 130 feet (39.620 m) are placed in prebored holes a minimum of 10 feet (3.050 m) deep and filled with bentonite slurry. (Prebored holes need not be used for bridges 130 feet (39.620 m) or less in length.) Bentonite slurry is assumed to provide no bearing capacity or lateral support for the piles.
- Bedrock is not closer than 15 feet (4.570 m) below bottom of abutment footing. Shorter piles require approval of the Chief Structural Engineer and may require rock coring and special details. See commentary for additional information.
- Setting factors of 1.50 for PPCB bridges and 1.33 for CWPG bridges magnify thermal movement. The setting factors provide for abutment construction temperatures of 25 to 75 degrees-F (-4 to 24 degrees-C).
- The controlling design condition is either (a) combined forces at the top of the pile at the strength limit state (F_y = 50 ksi) or (b) ductility (F_u = 65 ksi). (The axial force at the bottom of the pile [BDM 6.2.6.1] also needs to be considered in the overall abutment pile design.)
- Because the limits in Tables 6.5.1.1.1-1 and 6.5.1.1.1-2 are more liberal than past limits, exceptions to these guidelines are not encouraged. For bridges that exceed these limits, request an exception from the Chief Structural Engineer.

Table 6.5.1.1.1-1. Maximum bridge length and axial structural resistance for Grade 50 HP 10x57 (HP 250x85) in PPCB bridges with integral abutments

Maximum multiple span bridge length, feet (m)	Bridge skew, degrees (3)	Prebore depth, feet (m) (3)	Nominal HP 10x57 (HP 250x85) (6) axial structural resistance, kips (kN)				
			A-D beams, maximum beam length, end span (4) (5)	BTB beam, 105-foot (32.000-m) end span (4) (5)	BTC beam, 120-foot (36.580-m) end span (4) (5)	BTD beam, 135-foot (41.150-m) end Span (4) (5)	BTE beam, 155-foot (47.240-m) end span (4) (5)
575 (175.260) (1)	0	10 (3.050)	365 (1623)	324 (1441)	365 (1623)	365 (1623)	365 (1623)
		15 (4.570)	365 (1623)	365 (1623)	365 (1623)	365 (1623)	365 (1623)
525 (160.020)	15	10 (3.050)	365 (1623)	243 (1080)	324 (1441)	365 (1623)	365 (1623)
		15 (4.570)	365 (1623)	324 (1441)	365 (1623)	365 (1623)	365 (1623)
475 (144.780)	30 (2)	10 (3.050)	365 (1623)	203 (902)	243 (1080)	324 (1441)	324 (1441)
		15 (4.570)	365 (1623)	243 (1080)	324 (1441)	365 (1623)	365 (1623)
425 (129.540)	45 (2)	10 (3.050)	365 (1623)	203 (902)	243 (1080)	324 (1441)	324 (1441)
		15 (4.570)	365 (1623)	243 (1080)	324 (1441)	365 (1623)	365 (1623)

Table notes:

(1) At this length and for a bridge fixed at mid-length, thermal movement at its ends will be limited to about 1.55 inches (39 mm) each way. A CF-3 pavement expansion joint [OD SRP PV-101 and BR-series] will be required at each end of the bridge. Narrower pavement expansion joints are appropriate for shorter bridge lengths.

(2) At skews greater than 30 degrees, piles shall be oriented for weak axis bending, with webs perpendicular to centerline of roadway.

(3) The designer may interpolate for intermediate skews and prebore depths. (Prebored holes are not required for bridge lengths less than 130 feet (39.620 m).)

(4) For end spans shorter than the maximum, the designer may increase the resistance by the ratio of maximum end span/shorter end span, not to exceed 365 kips (1623 kN). The maximum beam length also is the maximum single span length.

(5) Based on site conditions the nominal geotechnical resistance per pile may be less than the nominal structural resistance per integral abutment pile given in this table. Both structural and geotechnical checks are required.

(6) Alternate H-pile shapes with $b_f/2t_f \leq 10.5$ may be used. Resistances may be extrapolated based on relative cross sectional area of alternate pile with respect to the area of an HP 10x57 (HP 250x85).

An integral abutment example demonstrating use of the table above is given in the commentary [BDM C6.5.1.1.1].

Table 6.5.1.1.1-2. Maximum bridge length and axial structural resistance for Grade 50 HP 10x57 (HP 250x85) in straight and curved girder CWPG bridges with integral abutments

Maximum length, feet (m)	Bridge skew, degrees (3)	Prebore depth, feet (m) (3)	Maximum end span, feet (m) (4) (5)	Nominal HP 10x57 (HP 250x85) (6) axial structural resistance, kips (kN)
400 (121.920) (1)	0	10 (3.050)	150 (45.720)	284 (1269)
		15 (4.570)	150 (45.720)	324 (1441)
367 (111.860)	15	10 (3.050)	145 (44.200)	243 (1080)
		15 (4.570)	150 (45.720)	284 (1269)
333 (101.500)	30 (2)	10 (3.050)	120 (36.580)	243 (1080)
		15 (4.570)	140 (42.670)	243 (1080)
300 (91.440)	45 (2)	10 (3.050)	120 (36.580)	243 (1080)
		15 (4.570)	140 (42.670)	243 (1080)

Table notes:

(1) At this length and for a bridge fixed at mid-length, thermal movement at its ends will be limited to about 1.55 inches (39 mm) each way. A CF-3 pavement expansion joint [OD SRP PV-101 and BR-series] will be required at each end of the bridge. Narrower pavement expansion joints are appropriate for shorter bridge lengths.

(2) At skews greater than 30 degrees, piles shall be oriented for weak axis bending, with webs perpendicular to centerline of roadway.

(3) The designer may interpolate for intermediate skews and prebore depths. (Prebored holes are not required for bridge lengths less than 130 feet (39.620 m).)

(4) For end spans shorter than the maximum, the designer may increase the resistance by the ratio of maximum end span/shorter end span, not to exceed 365 kips (1623 kN).

(5) Based on site conditions the nominal geotechnical resistance per pile may be less than the nominal structural resistance per integral abutment pile given in this table. Both structural and geotechnical checks are required.

(6) Alternate H-pile shapes with $b_f/2t_f \leq 10.5$ may be used. Resistances may be extrapolated based on relative cross sectional area of alternate pile with respect to the area of an HP 10x57 (HP 250x85).

For a single span welded plate girder bridge the maximum length is the maximum end span associated with the skew and prebore depth in the table above [BDM Table 6.5.1.1.1-2].

In cases where a mechanically stabilized earth (MSE) retaining wall is used near an integral abutment, each pile shall be sleeved with a corrugated metal pipe (CMP) to the bottom of the MSE wall to control compaction near the pile as the embankment and MSE wall are built. The CMP sleeve should be at least as long as the required prebore and, if longer than the prebore, shall be filled with sand to the elevation of the bottom of prebore and then with bentonite to the top of the CMP sleeve.

The CMP sleeve shall be spaced to allow for compaction between sleeves and shall have adequate clearance to the back of the MSE wall [BDM 6.2.4.1]. At the top, the CMP sleeve shall be blocked temporarily with framing lumber so that the pile remains at the center of the sleeve during placement and compaction of the backfill. The top of the CMP also shall be detailed to slip as the bottom of the abutment moves during the service life of the bridge.

If an integral abutment is situated within an MSE reinforced zone, the backfill shall be the same material as placed for the MSE wall, and it shall be placed in lifts and compacted in the same way as the MSE wall backfill material. Flooding as described on standard sheets [OBS SS 1007D, 1007E] shall not be used, and the designer shall include a note on the plans prohibiting placement of the backfill by flooding. The geotextile fabric, porous backfill, and abutment subdrain shall be placed as usual.

If soils at an integral abutment are very soft (N_{60}-values less than 5 for granular soils or less than 3 for clay soils) for a depth of more than 20 feet (6.096 m) below the abutment, the piles may have inadequate

lateral support from the soil. For this soft soil condition the designer shall check to ensure that the abutment piles have sufficient resistance for the factored load at maximum thermal movement of the abutment and with consideration of any prebored holes. Iowa State University research reports [BDM 6.5.1.5] and software such as LPILE can facilitate the check.

Integral abutments for PPCB bridges detailed on standard sheets [OBS SS 2078-2091] include the following components:

- A continuous corbel for support of the approach slab;
- A note requiring protection for the end of the bridge deck or backwall during construction. If the approach slab will not be in the contract then a paving block detail shall be included in the bridge plans;
- Subdrains;
- A single line of piles, with an additional pile under each wing extension when wings extend more than 7 feet (2.130 m) behind the abutment;
- A reinforced abutment cap beam-diaphragm to distribute superstructure loads to piles and resist active and passive earth pressures;
- Spiral reinforcing at each pile head;
- A seat for prestressed beams, steel girders, concrete slab, or rolled steel beams;
- Continuity reinforcement to provide a rigid connection between abutment and superstructure; and
- Wings for retaining soil at the top of a shallow-slope embankment.

See Figure 6.5.1.1.1 for a typical section through an integral abutment for a CWPG bridge. Note that for bridges with skews of 30 degrees or less, H-piles are rotated to align the pile webs with the centerline of abutment bearings. At skews above 30 degrees, piles shall be aligned with pile webs perpendicular to centerline of roadway.

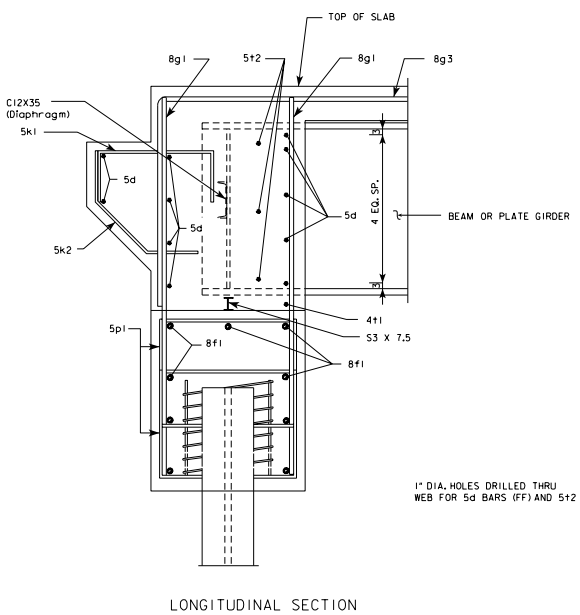

Figure 6.5.1.1.1. Integral abutment section for a steel girder bridge

Integral abutments also should be used with continuous concrete slab (CCS) bridges as indicated in the J-series standards. The J40-14 and J44-14 standards were updated on April 2016 to include an approach slab [OD SRP BR-205] which is tied to the integral abutment using stainless steel reinforcement. If the designer needs to alter a standard design or design a special CCS bridge, the designer shall follow these guidelines for the use of integral abutments:

- Use HP 10x42 (HP 250x62) piles, with 10-foot (3.050 m) prebored holes for bridge lengths greater than 130 feet (39.620 m).
- Limit pile axial load to Structural Resistance Level – 1 [BDM Table 6.2.6.1-1].
- Limit end span length to 45.5 feet (13.870 m).
- At 0-degree skew, limit bridge length to 400 feet (121.920 m), and at 45-degree skew limit bridge length to 300 feet (91.440 m). The maximum length at intermediate skews may be interpolated, but the designer shall not use integral abutments for a CCS bridge skewed more than 45 degrees.

The office policy of allowing timber piles in integral abutments for bridge lengths to 200 feet (60.960 m) and skews to 30 degrees remains in effect for PPCB, CWPG, CCS, and rolled steel beam (RSB) bridges.

The office has three-span CCS, three-span PPCB, and three-span RSB bridge standards. See those standards for the appropriate steel HP shape and integral abutment details. When altering any of the bridge standards for special integral abutment situations the designer shall consult with the supervising Section Leader.

6.5.1.1.2 Stub

For relatively long or highly skewed bridges that do not meet the integral abutment guidelines in Tables 6.5.1.1.1-1 and 6.5.1.1.1-2 and that do not need to retain significant heights of embankment, the office has designed standard stub abutments. Stub abutments for PPCB bridges detailed on standard sheets [OBS SS 2092-2098, 2078-BTB – 2091-BTE] include the following components:

- A continuous corbel for support of the approach slab;
- A note requiring protection for the end of the bridge deck or backwall during construction. If the approach slab will not be included in the contract then a paving block detail shall be included in the bridge plans;
- Stainless steel dowels for tying the approach pavement to the bridge;
- Subdrains;
- A double line of piles, with an additional pile under each wing extension when wings extend more than 7 feet (2.130 m) behind the abutment;
- A backwall (maskwall) to retain soil below the approach slab;
- Seats for prestressed beams, with wash sections for drainage between beam seats;
- A tapered lower section widened to accept vertical and battered piles; and
- Wings for retaining soil at the top of a shallow-slope embankment.

See Figure 6.5.4.2.1 for a section through a typical stub abutment.

The standard sheets detail steel piles, but the designer should note that if timber piles are used, spiral reinforcing should be placed at each timber pile head [BDM Table 6.2.5].

For bridge projects that require stub abutments with mechanically stabilized earth (MSE) retaining walls the designer shall use the following guidelines:

- The front row of piles shall be battered unless the batter increases the bridge length by more than five feet (1.524 m) due to the interference with the MSE wall.
- The centerline of the piling shall be a minimum of three feet (900 mm) from the face of the MSE wall at the bottom of the MSE wall.
- Corrugated metal pipes (CMP) will not be required around the individual piles unless downdrag forces are a problem. CMP may be provided to reduce downdrag forces in these situations. Consult with the supervising Section Leader.
- Provide CADD Note E55/M55 [BDM 13.2.2] in the plans requiring the contractor to tie the abutment piling group together and provide anchorage for the pile group to prevent shifting of the piles during backfilling. The note may be modified for special cases, such as partial driving, addition of tie backs, or if additional rows of piles are required for the abutments.

- If possible, the front and back row of piles should be in alignment to provide more room for MSE straps.
- If a stub abutment is situated within an MSE reinforced zone, the backfill shall be the same material as placed for the MSE wall, and it shall be placed in lifts and compacted in the same way as the MSE wall backfill material. Flooding as described on standard sheets [OBS SS 1007D, 1007E] shall not be used, and the designer shall include a note on the plans prohibiting placement of the backfill by flooding. The geotextile fabric, porous backfill, and abutment subdrain shall be placed as usual.

6.5.1.2 Design information

The bridge soils design package provided for each bridge site by the Soils Design Section contains recommendations for abutment foundation type and also contains the soil logs needed for design. The majority of Iowa bridge abutments are placed on piles that derive support from friction and end bearing. Design of piles shall be in accordance with the Piles Section [BDM 6.2] and "LRFD Pile Design Examples ~ 2013", as applicable.

Standard abutment footings supported by piles should have a bottom elevation 2 feet (600 mm) below berm elevation [OBS SS 2099-2105]. Abutment footings subject to frost heave are required to have a bottom elevation a minimum of 4 feet (1.220 m) below ground line.

Generally abutment foundations near streams and rivers are protected by riprap or other means but, for unprotected abutment foundations near stream or river channels, the office requires the designer to consider scour and to check unsupported pile length as for piers [BDM 6.6.4.1.3.1].

6.5.1.3 Definitions [AASHTO-LRFD 3.3.2]

Section Leader is the supervisor of the Office of Bridges and Structures preliminary bridge section, final design section, or consultant coordination section.

Substructure is any construction below the bearing seats or, in the absence of bearings, below the soffit of the superstructure.

6.5.1.4 Abbreviations and notation [AASHTO-LRFD 3.3.2, C3.4.1, 3.10.4.2]

A_s, peak seismic ground acceleration coefficient modified by short-period site factor [AASHTO-LRFD 3.10.4.2]
CCS, continuous concrete slab
CE, vehicular centrifugal force [AASHTO-LRFD 3.3.2]
CMP, corrugated metal pipe
CWPG, continuous welded plate girder
DC1, non-composite dead load of structural components and nonstructural attachments such as girders, deck, haunches, diaphragms, and cross frames [AASHTO-LRFD 3.3.2].
DC2, composite dead load of structural components and nonstructural attachments such as barrier rails and sidewalks, curbs, and medians that are not part of the initial deck pour [AASHTO-LRFD 3.3.2].
DW, dead load of wearing surfaces and utilities [AASHTO-LRFD 3.3.2].
EH, horizontal earth pressure load [AASHTO-LRFD 3.3.2]
HPC, high performance concrete
IM, Vehicular dynamic load allowance [AASHTO-LRFD 3.3.2]
LL, vehicular live load [AASHTO-LRFD 3.3.2]. For abutments it is the HL-93 load arranged for maximum effect and multiplied by number of lanes and by multiple presence factor, applied vertically at center of bearings.
LS, live load surcharge [AASHTO-LRFD 3.3.2]

N_{60} or N_{60}-value, standard penetration test number of blows per foot (300 mm) corrected to a hammer efficiency of 60%. N_{60} also may be given as **SPT N_{60}-value.** The Iowa DOT is in the process of changing specifications and determining hammer calibrations so that N_{60} values will be reported.

Until N_{60} values are available the designer may follow past practice and use uncorrected N-values. See the pile commentary discussion [BDM C6.2.1.4].

PPCB, pretensioned prestressed concrete beam

RSB, rolled steel beam

S_{D1}, horizontal response spectral acceleration coefficient at 1.0-sec. period modified by long-period site factor [AASHTO-LRFD 3.10.4.2]

γ_{EQ}, load factor for live load applied simultaneously with seismic loads [AASHTO-LRFD C3.4.1]

6.5.1.5 References

Abendroth, R.E. and Greimann, L.F. *Field Testing of Integral Abutments, Final Report HR-399,* Ames: Center for Transportation Research and Education (CTRE), Iowa State University, 2005. (Available online at http://www.iowadot.gov/operationsresearch/reports/reports_pdf/hr_and_tr/reports/hr399.pdf).

Dirks, Kermit and Patrick Kam. *Foundation Soils Information Chart, Pile Foundation*. Ames: Iowa Department of Transportation, Office of Road Design, 1994. (a.k.a. **Blue Book**) Generally with the move to LRFD, the ASD-based Blue Book is out-of-date, and its contents have been revised and moved to the BDM. The Blue Book is available from the Soils Design Section of the Office of Design.

Greimann, L.F., B.P. Phares, Y. Deng, G. Shryack and J. Hoffman. *Field Monitoring of Curved Girder Bridges with Integral Abutments, Final Report,* FHWA Pooled Fund Study TPF-5(169), Iowa State University InTrans Project 08-323, January 2014. (Available online at http://www.intrans.iastate.edu/research/documents/research-reports/curved_girder_integral_abutments_w_cvr.pdf).

Greimann, L.F., R.E. Abendroth, D.E. Johnson, and P.B. Ebner. *Final Report, Pile Design and Tests for Integral Abutment Bridges, HR-273, and Addendum.* Ames: Iowa Department of Transportation and College of Engineering, Iowa State University, 1987. (Available online at http://www.iowadot.gov/operationsresearch/reports/reports_pdf/hr_and_tr/reports/hr273.pdf).

6.5.2 Loads

Load application to abutments must be considered with respect to the entire substructure. The pier section [BDM 6.6] covers the full range of loads in detail, and the designer should review that section in addition to the topics included under this article.

6.5.2.1 Dead [AASHTO-LRFD 3.5.1]

The office classifies dead load as follows.

- DC1 is noncomposite dead load including beams or girders, deck, haunches, diaphragms, and cross frames.
- DC2 is composite dead load including barrier rails and sidewalks, curbs, and medians that are not part of the initial deck pour.
- DW is composite dead load of wearing surfaces and utilities.

Unit weight of concrete shall be taken at 0.150 kcf regardless of concrete strength. Other weights not specified in this manual may be taken from the AASHTO LRFD Specifications [AASHTO-LRFD Table 3.5.1-1].

For a typical bridge the office requires a future wearing surface load of 0.020 ksf (960 Pa), which is part of the DW load.

For determining typical bridge abutment loads the office assumes that end spans are simply supported for PPCB DC1 load and assumes that end spans are continuous for PPCB DC2 and DW and all CWPG and RSB dead loads.

The office makes no special transverse distribution rules for superstructure dead loads and simply places the total dead load on the group of abutment piles, excluding any wing extension piles.

In a change from past practice the office now requires that the dead load from reinforced concrete approach pavement be included as an abutment load. For abutment design the approach pavement may be assumed to span a 12-foot (3.660-m) void, which will result in 6 feet (1.830 m) of DC1 approach pavement load to the abutment.

6.5.2.2 Live [AASHTO-LRFD 3.6.1]

Unless special requirements govern the design, vehicular live load (LL) for abutments shall be HL-93 [AASHTO-LRFD 3.6.1.2]. It shall be applied as discussed in the AASHTO LRFD Specifications [AASHTO-LRFD 3.6.1.3].

In unusual situations identified by the Chief Structural Engineer, where a bridge will experience a high percentage of truck traffic, accumulation of trucks due to traffic flow control, or special industrial loads, the designer will need to consider additional loading as discussed in the AASHTO LRFD Specifications commentary [AASHTO-LRFD C3.6.1.2.1, C3.6.1.3.1]. In these situations the designer shall consult with the Chief Structural Engineer.

The number of design lanes shall be determined according to the AASHTO LRFD Specifications [AASHTO-LRFD 3.6.1.1.1].

For design of abutments in PPCB bridges, CWPG bridges, CCS bridges similar to J-series standards, and RSB bridges similar to RS-10 standards, the designer shall apply the live load for maximum effect assuming continuity of beams and girders, except at expansion joints [BDM Table 5.4.1.4.1.1, 5.5.2.4.1.1]. Modification due to multiple presence of live load also shall be considered [AASHTO-LRFD 3.6.1.1.2].

In a change from past practice the office now requires that live load on reinforced concrete approach pavement be included as an abutment load. The approach pavement may be assumed to span a 12-foot (3.660-m) void. In all cases the designer shall arrange the HL-93 lane and truck or tandem load for maximum effect. Except for uplift the maximum effect typically will be achieved with lane load on both the approach pavement and bridge but with truck or tandem on either the pavement or on the bridge.

Sidewalk and other live loads shall be added to the vehicular live load when applicable. A pedestrian live load (PL) of 0.075 ksf (3.60 kPa) shall be applied to all sidewalks wider than 2.0 feet (610 mm) [AASHTO-LRFD 3.6.1.6] and considered simultaneously with the vehicular live loads.

The office makes no special transverse distribution rules for superstructure live loads and simply places the total live load on the group of abutment piles, excluding any wing extension piles.

6.5.2.3 Dynamic load allowance [AASHTO-3.6.2.1]

The dynamic load allowance (IM) shall be determined and applied to truck or tandem loads in accordance with the AASHTO LRFD Specifications [AASHTO-LRFD 3.6.2.1].

The IM shall be applied to the design of the following abutment components:

- The portion of an abutment above the cap beam or footing,
- The cap beam for an integral abutment when piles below are in prebored holes, and
- Piles in prebored holes for an integral abutment.

The IM shall not be applied to the design of the following abutment components:

- Cap beam or footing for a stub abutment,
- Piles in prebored holes for a stub abutment,
- Piles being checked for scour; and

- Drilled shafts below footings.

6.5.2.4 Centrifugal [AASHTO-LRFD 3.6.3]

For a curved bridge the designer shall apply centrifugal force (CE) in any load combination that includes HL-93 live load and should not apply that live load without centrifugal force. Centrifugal force shall be determined according to the AASHTO-LRFD Specifications [AASHTO-LRFD 3.6.3] with the exceptions discussed below. In most cases the centrifugal force on an abutment for a horizontally curved bridge will be small and easily carried by the abutment foundation.

Design speed shall be taken as listed for the appropriate highway classification in Article 1C-1 of the Office of Design's Design Manual unless otherwise given in specific bridge design criteria prepared by the preliminary design section or consultant coordination section. Depending on the highway classification the Design Manual gives design speeds from 70 mph (110 km/h) to 30 mph (50 km/h).

The number of lanes loaded for CE shall be tied to the number of lanes loaded for live load. The force shall not be redistributed to another substructure component.

The supervising Section Leader has the final authority for determining whether or not to apply centrifugal force for unusual bridge configurations.

6.5.2.5 Braking force [AASHTO-LRFD 3.6.4]

The braking force (BR) shall be determined according to the AASHTO-LRFD Specifications [AASHTO-LRFD 3.6.4] and the guidelines in the pier braking force article [BDM 6.6.2.4].

Assign half of the adjacent span braking force to an integral abutment.

For a stub abutment with steel reinforced elastomeric bearings, half of the adjacent span braking force may be assigned to the abutment [BDM 6.6.3.3.1]. However, if the abutment has friction acting bearings, braking forces tributary to the abutment shall be assigned to fixed substructure units, not to the stub abutment [BDM 6.6.3.3.3].

6.5.2.6 Earth pressure [AASHTO-LRFD 3.11.5]

For design of stub abutment piles, the horizontal earth pressure load (EH) shall be applied to the abutment backwall. The equivalent fluid dead load pressure shall be the active pressure from soil with a unit weight of 0.125 kcf (19.6 kN/m^3) and an effective angle of internal friction of 1 vertical to 1.5 horizontal (33.69 degrees).

For non-standard abutments with significant soil retaining functions, follow guidelines in the AASHTO LRFD Specifications [AASHTO-LRFD 3.11].

6.5.2.7 Live load surcharge [AASHTO-LRFD 3.11.6.4]

Live load surcharge (LS) needs to be considered for stub abutments assuming that the approach pavement is not supported on the abutment due to pavement or corbel failure. Soil for the surcharge shall be assumed to have a unit weight of 0.125 kcf (19.6 kN/m^3). The equivalent height of soil representing the surcharge shall be taken from the AASHTO LRFD Specifications [AASHTO-LRFD Table 3.11.6.4-1].

Live load surcharge need not be considered for design of integral abutments.

6.5.2.8 Earthquake [AASHTO-LRFD 3.10, 4.7.4.1, 4.7.4.4]

Based on the acceleration coefficient S_{D1} [AASHTO-LRFD 3.10.4.2] for Site Class A though E [AASHTO-LRFD 3.10.3.1], all of Iowa shall be classified as Seismic Zone 1 [AASHTO-LRFD 3.10.6] for design of typical bridges. For unusual cases where the site is classified as Site Class F and for Missouri River and

Mississippi River bridges the designer shall determine the Seismic Zone based on the specific site characteristics.

Bridges in Seismic Zone 1 need not be analyzed for seismic forces (EQ) [AASHTO-LRFD 4.7.4.1]. However, connections that attach the superstructure to an abutment so as to restrain relative movement shall be designed for horizontal connection forces. The acceleration coefficient A_S [AASHTO-LRFD 3.10.4.2] will vary below and above 0.05 in Iowa, generally below in northern Iowa and above in southern Iowa. Therefore the horizontal design connection force in restrained directions shall be taken as either 0.15 (if $A_s < 0.05$) or 0.25 (if $A_s \geq 0.05$) times the vertical reaction due to the tributary permanent load [AASHTO-LRFD 3.10.9.2]. The office neglects any live load in determining the connection force, consistent with $\gamma_{EQ} = 0.0$ [AASHTO-LRFD C3.4.1].

For stub abutment at a deck expansion joint the designer shall provide the minimum bridge seat width for the expansion bearings [AASHTO-LRFD 4.7.4.4].

6.5.3 Load application [AASHTO-LRFD 1.3.2, 3.4.1]

Load factors shall be adjusted by the load modifier, which accounts for ductility, redundancy, and operational importance [AASHTO-LRFD 1.3.2, 3.4.1]. For typical bridges the load modifier shall be taken as 1.0.

6.5.3.1 Limit states [AASHTO-LRFD 3.4.1, 3.4.2]

For a typical integral or stub abutment the designer shall consider the following load combinations as they apply [AASHTO-LRFD 3.4.1].

- Strength I, superstructure with vehicles but without wind
- Service I, superstructure with vehicles and wind at 55 mph (89 kph)

For unusual abutments the designer may need to consider additional load combinations.

Except for unusual situations such as staged construction, the designer need not investigate construction load combinations [AASHTO-LRFD 3.4.2].

6.5.3.2 Integral abutments

For determining loads for integral abutments, assume that the HL-93 lane load can be present on both the approach and bridge while the truck or tandem is present only at one of the two locations. Place the lane load and truck or tandem in all lanes for maximum downward load on the abutment.

6.5.3.3 Stub abutments

For determining loads for stub abutments assume that the HL-93 lane load can be present on both the approach and bridge while the truck or tandem is present only at one of the two locations. However, because maximum uplift will occur with live load on adjacent spans, for checking uplift the lane load may be omitted from the end span. To consider the abutment loading if the approach pavement or corbel breaks, replace the lane load on the approach pavement with a live load surcharge (LS). Note also the following guidelines:

- The standard double reinforced concrete approach slab [OD SRP BR-series] may be assumed to span 12 feet (3.660 m).
- Only the Strength I and Service I limit states need to be considered for typical projects.
- If the truck or tandem is present on the approach, the lane load also must be present on the approach. Lane load on the bridge may have several arrangements for maximum effects, including uplift.
- If the truck or tandem is present on the bridge, the lane load also must be present on the bridge. The lane load may be present on the approach.

- If live load is arranged for uplift at the abutment, (1) truck or tandem and lane load may act vertically on the approach slab or (2) live load surcharge (LS) may act horizontally from the approach.
- If live load surcharge (LS) acts horizontally from the approach, only lane load or uplift may be on the bridge. Dead load of the approach pavement (DC) cannot be present.
- The approach pavement does not cause a surcharge. Horizontal earth pressure (EH) and live load surcharge (LS), when active, apply pressure beginning at the top pavement surface.
- Horizontal earth pressure (EH) is always active, but the pressure may be used with minimum or maximum load factors.
- Friction forces (FR), when in effect, can act in either direction. Friction forces are determined from superstructure dead load (DC and DW) and are not adjusted for dead load, load factors. Dead load of the wearing surface (DW) is always present, but may be used with maximum and minimum load factors.

Additional information is given in the analysis and design article [BDM 6.5.4.2.1], and example load cases are given in the commentary [BDM C6.5.4.2.1].

6.5.4 Abutment analysis, design, and detailing

6.5.4.1 Integral abutments

6.5.4.1.1 Analysis and design [AASHTO-LRFD 5.10.8, 10.7.1.2]

The load and resistance factor design (LRFD) method shall be used for integral abutments.

The Soils Design Section provides information regarding soils and recommended abutment support for each bridge. Standard integral abutments are supported on steel H-piles or timber piles but not on concrete piles, pipe piles, drilled shafts, or footings founded on rock. For bridges with skews of 30 degrees or less, H-piles are rotated to align the pile webs with the centerline of abutment bearings. At skews above 30 degrees, piles shall be aligned with pile webs perpendicular to centerline of roadway. General guidelines for pile selection are given in Table 6.5.4.1.1.

Table 6.5.4.1.1. Guidelines for selection of integral abutment pile type

Bridge length	Pile Type	Remarks
150 feet (45.700 m) or less	Timber	Use if soil conditions are suitable, but do not use carpet padding wrapping at top.
	Steel H-pile	Use if soil conditions are suitable, if point bearing is required, or if economical.
More than 150 to 200 feet (45.700 to 61.000 m)	Timber	Use if soil conditions are suitable, and use carpet padding wrapping at top [BDM 6.2.6.3 and C6.2.6.3].
	Steel H-pile	Use if soil conditions are suitable, if point bearing is required, or if economical.
More than 200 feet (61.000 m)	Steel H-pile	Use if soil conditions are suitable.

For bridge lengths up to and including 130 feet (39.600 m) prebored holes are not required, and pile loads need not include the dynamic load allowance. To facilitate bridge superstructure end movements for bridges greater than 130 feet (39.600 m) in length, piles for those bridges are to be driven in prebored holes at least 10 feet (3.050 m) deep. Prebored holes are to be sized, constructed, and filled with bentonite slurry as specified in the Iowa DOT Standard Specifications [IDOT SS 2501.03, Q].

Prebored holes greater than 10 feet (3.050 m) deep may be required for soil layer penetration and to prevent downdrag forces in deep embankment fills. For steel H-piles within typical design conditions, prebored hole depths to 15 feet (4.570 mm) are permissible for integral abutments. When holes deeper

than 10 feet (3.050 m) are used, however, the designer shall verify use of the deep holes with the supervising Section Leader.

For a typical project the number of piles shall be determined from the total abutment Strength I factored load divided by the factored structural resistance for one pile [BDM 6.2.6.1, 6.2.6.3, and 6.5.1.1.1]. See the commentary for an example [BDM C6.5.1.1.1]. The following rules also shall apply.

- The standard double reinforced concrete approach slab [OD SRP BR-series] may be assumed to span 12 feet (3.660 m).
- Include dead and live load from the approach slab on abutment piles.
- Assume that the HL-93 lane load can be present on both the approach and bridge while the truck or tandem is present only at one of the two locations.
- For integral abutments with additional wing extension piles shown on standard sheets [OBS SS 2085-2091, 2085-BTCD – 2091-BTE], consider the wing extension piles for support of the wings only.
- Use at least one pile per PPCB or steel girder.
- Along the abutment use a maximum pile spacing of 8 feet (2.440 m) and a minimum of the larger of 2.5 feet (760 mm) or 2.5 times the pile size [AASHTO-LRFD 10.7.1.2]. If piles are sleeved, allow 2 feet (610 mm) clear between sleeves.

Within the length and skew limits for bridges with integral abutments [BDM Tables 6.5.1.1.1-1 and 6.5.1.1.1.-2] pile bending and buckling need not be checked if prebored holes do not exceed a depth of 15 feet (4.570 m). Also, within the length limits and maximum PPCB depths, the abutment cap beam-diaphragm reinforcing steel shown on standard sheets [OBS SS 2078-2091, 2078-BTB – 2091-BTE] is adequate.
The designer shall determine the pile contract length based on geotechnical resistance and construction control method. In unusual cases, even though the structural resistance is sufficient, the designer may find it necessary to increase the number or size of abutment piles to achieve sufficient geotechnical resistance.

The designer also shall determine the target driving resistance based on construction control method and give the appropriate soil, resistance factor, contract length, driving target, and retap information on the plans. For typical projects the designer shall use CADD Notes E818 and E819 [BDM 13.8.2]. See also “LRFD Pile Design Examples ~ 2013”.

If at any cross section along an integral abutment, the smaller of the width or depth exceeds 4 feet (1.219 m) the abutment shall be considered mass concrete, and the designer shall consult with the supervising Section Leader or the Assistant Bridge Engineer regarding mass concrete notes to be placed on the plans for controlling and monitoring concrete mix temperatures. Regardless of abutment thickness the designer shall provide shrinkage and temperature reinforcement as required by the AASHTO LRFD Specifications [AASHTO-LRFD 5.10.8].

6.5.4.1.2 Detailing

For the usual bridge deck profile or a moderately superelevated deck profile the bottom of the integral abutment footing should be horizontal but, if the difference in bearing seat elevations is greater than 1.5 feet (450 mm), the designer should consider sloping the bottom of the footing.

Use a standard spiral reinforcing hoop at the top of each embedded pile as detailed on standard sheets [OBS SS 2078-2091, 2078-BTB – 2091-BTE]. Hold the spacing for each spiral with three 7/8 x 7/8 x 1/8-inch (22 x 22 x 3.2-mm) steel angles.

Additional reinforcing in the form of p3 bars shall be placed in all integral abutments that are supported on steel H-piles and that support C, D, BTC, BTD, or BTE pretensioned prestressed concrete beams, continuous welded plate girders, or rolled steel beams. The p3 bars are bent and placed to surround each H-pile at the bottom of the abutment as detailed and listed on standard sheets [OBS SS 2085-2091,

2085-BTCD – 2091-BTE]. The p3 bars are not required in PPCB bridges with A, B, or BTB beams or CCS bridges.

Do not use paving notch dowels with integral abutments except for the J40-14 and J44-14 standards. These particular J-standards were updated on April 2016 to include an approach slab [OD SRP BR-205] which is tied to the integral abutment using stainless steel reinforcement.

The steel girder integral abutment details shown in Figures 6.5.4.1.2-1 and 6.5.4.1.2-2 are similar to those for PPCB integral abutments on standard sheets [OBS SS 2078-2091, 2078-BTB – 2091-BTE]. The steel girder details additionally incorporate a steel channel diaphragm bolted to girder stiffeners and bent 5t2 bars and front face 5d bars placed through one-inch (25 mm) holes drilled in girder webs.

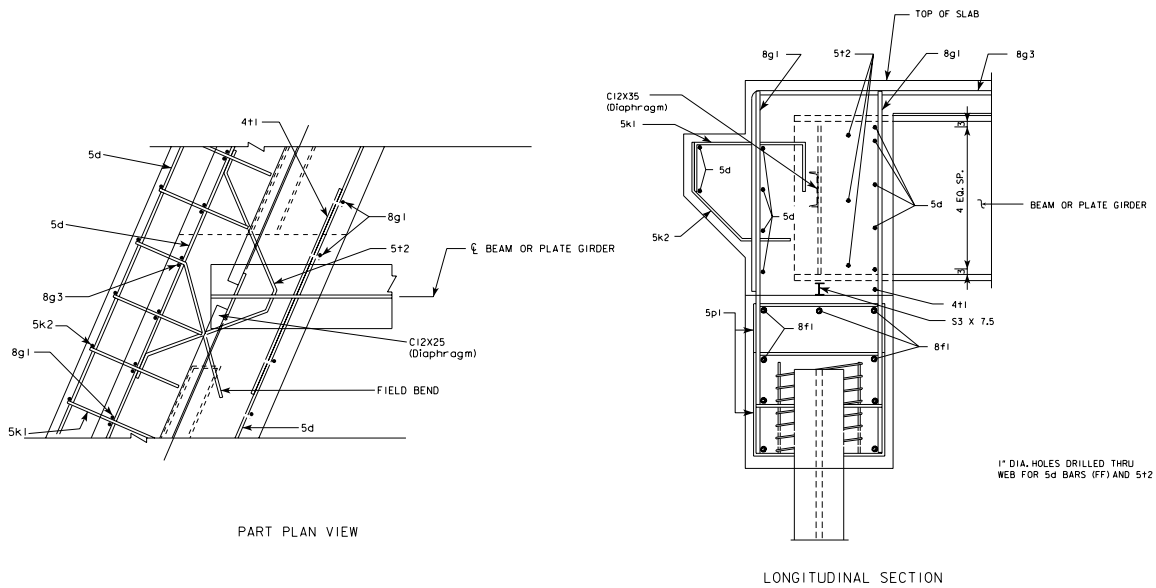

Figure 6.5.4.1.2-1. Integral abutment partial plan and section for a steel girder bridge

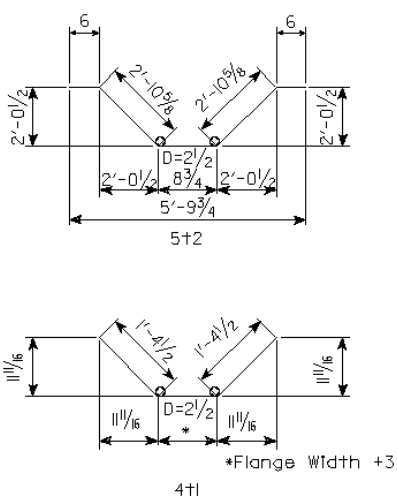

Figure 6.5.4.1.2-2. Special reinforcing for steel girder bridge integral abutment

Step elevations shall be detailed as for piers, but steps for integral abutments shall not be reinforced [BDM 6.6.4.1.1.2].

All barrier rail to bridge deck/wing reinforcement for interstate and primary bridges shall be stainless steel as well as the approach notch dowels used in the J40-14 and J44-14 standards. All other reinforcing bars in integral abutments shall be epoxy coated, including all bars in wing extensions, except for spirals.

When integral abutment piles are not designed for downdrag, approach pavement details shall be included with bridge plans. For projects completed in the Office of Bridges and Structures, the Office of Design will provide the approach pavement details.

When integral abutment piles are designed for downdrag, a paving block shall be included on the bridge plans, and approach pavement details shall be included with road plans. Including the approach pavement details with the road plans is intended to allow much of the settlement associated with pile downdrag to occur before placement of the pavement. Designers in the Office of Bridges and Structures shall coordinate the approach pavement details with the Office of Design.

Integral abutments shall be provided with subdrains as indicated on standard sheets for PPCB bridges [OBS SS 1007-1007E].

6.5.4.2 Stub abutments

6.5.4.2.1 Analysis and design [AASHTO-LRFD 4.7.4.4, 5.10.8, 10.7.1.2, 11.6]

The load and resistance factor design (LRFD) method shall be used for stub abutments.

Stub abutments are intended for use on shallow-slope embankments if integral abutments are not feasible. A stub abutment is designed to resist longitudinal forces transmitted through expansion bearings from the superstructure. Between expansion bearing seats the abutment has formed wash sections for drainage.

Minimum stub abutment dimensions shall be those illustrated in Figure 6.5.4.2.1. The length of the expansion bearing seat shall meet the requirement for seismic zone given in the AASHTO LRFD Specifications [AASHTO-LRFD 4.7.4.4]. Except for sites classified as Site Class F or for Mississippi or Missouri River bridge sites seat length shall be determined for Seismic Zone 1.

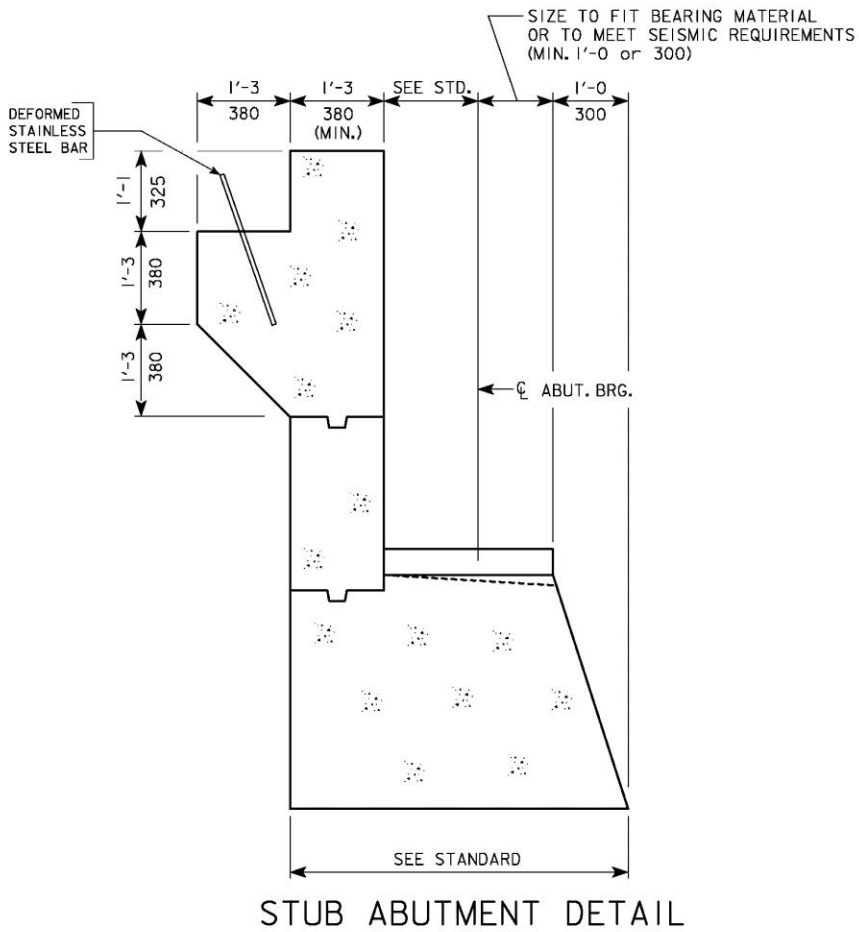

Figure note:

- See Office of Design's standard road plan for approach pavement [OD SRP BR-series].

Figure 6.5.4.2.1. Standard stub abutment section with required minimum dimensions

Standard stub abutments for C-, D-, BTC-, BTD-, and BTE-beam, PPCB bridges are given on standard sheets [OBS SS 2092-2105, 2092-BTCD – 2105-BTE].

A stub abutment shall be designed for the effects of vertical load, horizontal load, and moment. Load combinations should seek to do the following:

- Maximize axial load to toe pile,
- Maximize axial load to heel pile,
- Minimize axial load to toe pile,
- Minimize axial load to heel pile, and
- Maximize shear load to pile.

See the commentary [BDM C6.5.4.2.1] for typical load combinations.

The office follows the additional guidelines listed below.

- Piles in the two rows are staggered.
- Along the abutment, use a maximum pile spacing of 8 feet (2.440 m) and a minimum of the larger of 2.5 feet (760 mm) or 2.5 times the pile size [AASHTO-LRFD 10.7.1.2].

- For typical projects consider only Strength I and Service I limit states.
- Consider maximum and minimum load factors.
- Vertical loads on piles consist of dead and live load only; no dynamic load allowance is included.
- Consider dead and live load on the approach pavement.
- Consider superstructure live load uplift.
- Vertical loads are resisted by the back and front rows of piles.
- For resisting uplift, the nominal bond resistance between an H-pile and abutment concrete is 0.060 ksi (0.41 MPa) with $\varphi = 0.45$ [BDM 6.2.6.1].
- Horizontal loads are resisted by shear in all piles plus the horizontal components of the front battered row of piles.
- Lateral resistances at the service and strength limit states are as given in Table 6.2.6.1-2 for steel H-piles and as given in Table 6.2.6.3 for timber piles. Detailed analysis may determine larger lateral resistances.
- Superstructure temperature loading is reversible.
- Design of a tall backwall for nonstandard stub abutments shall be designed as a retaining wall to fully withstand soil pressures [AASHTO-LRFD 11.6], as well as vertical loads.

The designer shall determine the pile contract length based on geotechnical resistance and construction control method. In unusual cases, even though the structural resistance is sufficient, the designer may find it necessary to increase the number or size of abutment piles to achieve sufficient geotechnical resistance.

The designer also shall determine the target driving resistance based on construction control method and give the appropriate soil, resistance factor, contract length, driving target, and retap information on the plans. For typical projects the designer shall use CADD Notes E818 and E819 [BDM 13.8.2]. See also “LRFD Pile Design Examples ~ 2013”.

If at any cross section along a stub abutment, the smaller of the width or depth exceeds 4 feet (1.219 m) the abutment shall be considered mass concrete, and the designer shall consult with the supervising Section Leader or the Assistant Bridge Engineer regarding mass concrete notes to be placed on the plans for controlling and monitoring concrete mix temperatures. Regardless of abutment thickness the designer shall provide shrinkage and temperature reinforcement as required by the AASHTO LRFD Specifications [AASHTO-LRFD 5.10.8].

6.5.4.2.2 Detailing

For the usual bridge deck profile or a moderately superelevated deck profile the bottom of the stub abutment footing should be horizontal but, if the difference in bearing seat elevations is greater than 2.5 feet (760 mm), the designer should consider sloping the bottom of the footing.

Use a standard spiral reinforcing hoop at the top of each embedded timber pile (but not steel H-pile). Hold the spacing for each spiral with three 7/8 x 7/8 x 1/8-inch (22 x 22 x 3.2-mm) steel angles.

Use paving notch dowels as shown on standard sheets [OBS SS 2092-2098, 2092-BTCD – 2098-BTE].

Because of the risk of leakage from or failure of the expansion joint at the abutment, provide wash sections for drainage between bearings as shown in Figures 6.5.4.2.2-1 and 6.5.4.2.2-2. Seal the wash sections and bearing seats with a concrete sealer specified in the Iowa DOT Standard Specifications [IDOT SS 2403.03, P, 3]. Provide a bar mat in each bearing seat as shown in Figure 6.5.4.2.2-2.

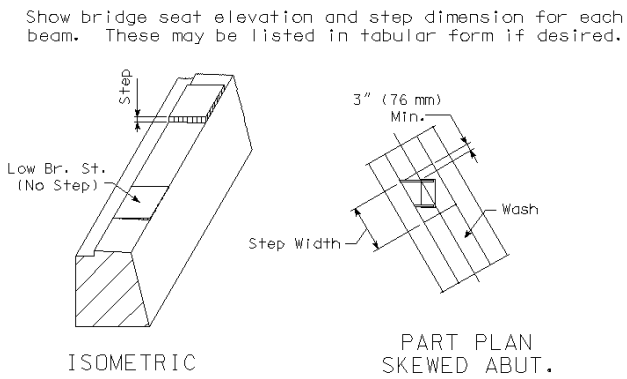

Figure 6.5.4.2.2-1. Wash section between bearing seats

ABUTMENT BRIDGE SEAT DETAILS

These details applicable for structures not having end diaphragms resting on top of footing.

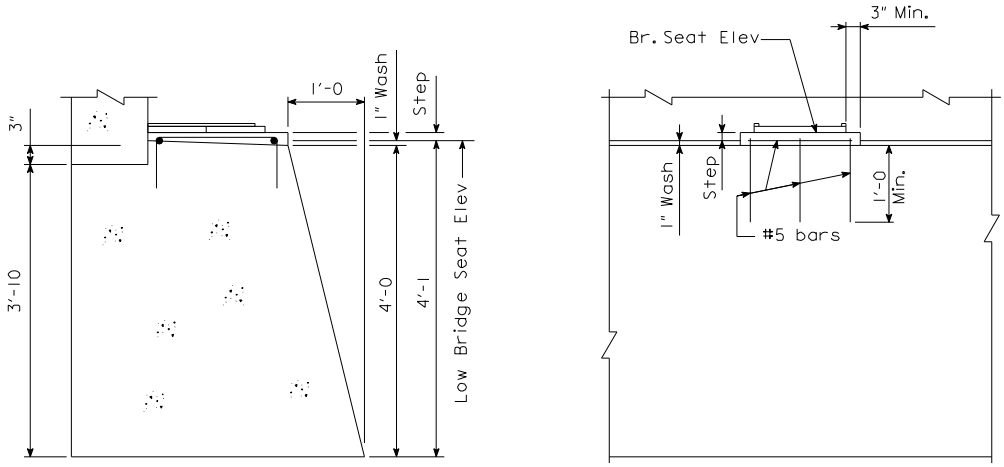

PART SECT. PART FRONT ELEV.

Note: Use bar mat under each beam.

ABUTMENT BRIDGE SEAT DETAILS

These details applicable for structures not having end diaphragms resting on top of footing.

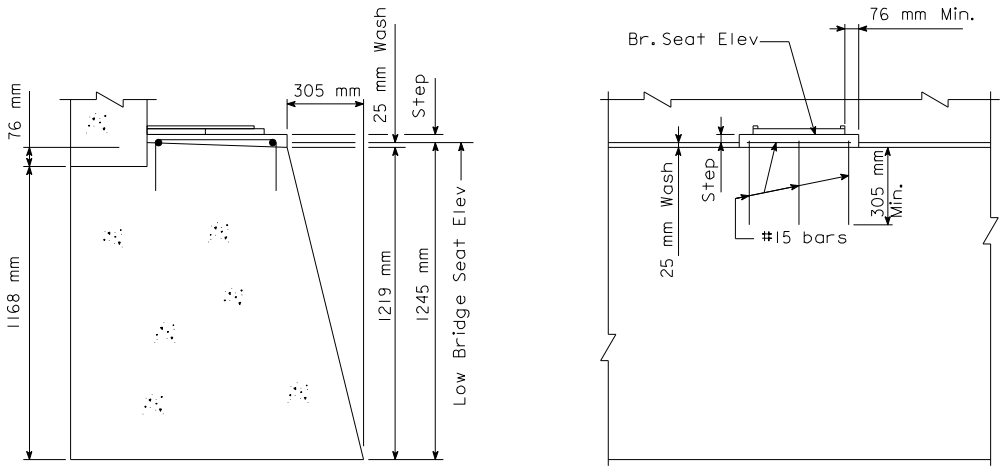

PART SECT. PART FRONT ELEV.

Note: Use bar mat under each beam.

Figure 6.5.4.2.2-2. Bearing seat details

Provide a minimum distance of 6 inches (150 mm) between center of an anchor bolt and edge of a stub abutment.

All barrier rail to bridge deck/wing reinforcement and paving notch dowels for interstate and primary bridges shall be stainless steel. All other reinforcing bars in stub abutments shall be epoxy coated, including all bars in wing extensions.

When a stub abutment is adjacent to PCC approach pavement and abutment piles are not designed for downdrag, approach pavement details shall be included with bridge plans. For projects completed in the Office of Bridges and Structures, the Office of Design will provide the approach pavement details.

When a stub abutment is adjacent to PCC approach pavement and abutment piles are designed for downdrag, a paving block shall be included on the bridge plans, and approach pavement details shall be included with road plans. Including the approach pavement details with the road plans is intended to allow much of the settlement associated with pile downdrag to occur before placement of the pavement. Designers in the Office of Bridges and Structures shall coordinate the approach pavement details with the Office of Design.

Stub abutments shall be provided with subdrains as indicated on standard sheets for PPCB bridges [OBS SS 1007-1007E].

6.5.4.3 Wing walls

6.5.4.3.1 Analysis and design

The load and resistance factor design method shall be used for design of wing walls.

For typical bridges with wings and wing extensions shown on standard sheets no special design is required. In unusual cases when the wings need to be specially designed and high performance concrete (HPC) is specified for the bridge, the designer may take advantage of the higher strength concrete [IDOT DS-12033].

Wings and extensions for typical bridges are shown on office standard sheets as follows:

- Integral abutments with 7-foot (2.134-m) standard abutment wings for A, B, and BTB beams [OBS SS 2078-2084, 2078-BTB – 2084-BTB, 4500-4506, 4500-BTB – 4506-BTB],
- Integral abutments with 7-foot (2.134-m) standard abutment wings and 6.50-foot (1.981-m) (measured from centerline of abutment) standard abutment extensions and abutment diaphragm wing extensions for C, D, BTC, and BTD beams [OBS SS 2085-2091, 2085-BTCD – 2091-BTCD, 4507-4513, 4507-BTCD – 4513-BTCD],
- Integral abutments with 7-foot (2.134-m) standard abutment wings and 8.50-foot (2.591-m) (measured from centerline of abutment) standard abutment extensions and abutment diaphragm wing extensions for BTE beams [OBS SS 2085-BTE – 2091-BTE, 4507-BTE – 4513-BTE],
- Stub abutments with 7-foot (2.134-m) standard wings and 6-foot (1.829-m) (measured from front face of abutment) standard wing footings and wing extensions for C, D, BTC, and BTD beams [OBS SS 2092-2105, 2092-BTCD – 2105-BTCD, 4542-4548, 4542-BTCDE – 4548-BTCDE].
- Stub abutments with 7-foot (2.134-m) standard wings and 8-foot (2.438-m) (measured from front face of abutment) standard wing footings and wing extensions for BTE beams [OBS SS 2092-BTE - 2105-BTE, 4542-BTCDE – 4548-BTCDE].

Note that the standard sheets generally use the term “wing wall” in a collective sense to include wing extension and wing. On some stub abutment sheets [OBS SS 2099-2105, 2099-BTCD – 2105-BTE] the term “wingwall” in the reinforcing table also refers specifically to the wing extension.

For typical PPCB or CWPG bridges there should be no need to change wing lengths, but for non-typical bridges the designer shall check the need to increase lengths. A bridge is considered non-typical if any of the following circumstances apply:

- Skew greater than 30 degrees,

- Superelevation, or
- Beam depth greater than 63 inches (1600 mm), the standard PPCB BTE beam depth.

To check wing lengths, assume the 1 vertical to 2.5 horizontal slope of the embankment extends from the berm underneath the bridge to road elevation, as shown in Section A-A of Figure 6.5.4.3.1-1. When flatter embankment slopes, such as a 1 to 3 slope, are used the wing lengths should still be checked based on a 1 to 2.5 slope unless a 1 to 3 slope is specifically called for by the Preliminary Bridge Section. The wing length should be sufficient so that sloping soil will intersect the berm and not spill onto the bridge seat or around the ends of the wings. Although the office prefers the 1 vertical to 2.5 horizontal slope, a steeper slope of 1 to 2 along the wings is permissible with approval of the supervising Section Leader. If the 1 to 2 slope indicates the need to increase wing lengths, use a 1 to 2.5 slope to determine the extended lengths. For an example, see BDM C3.2.7.5.

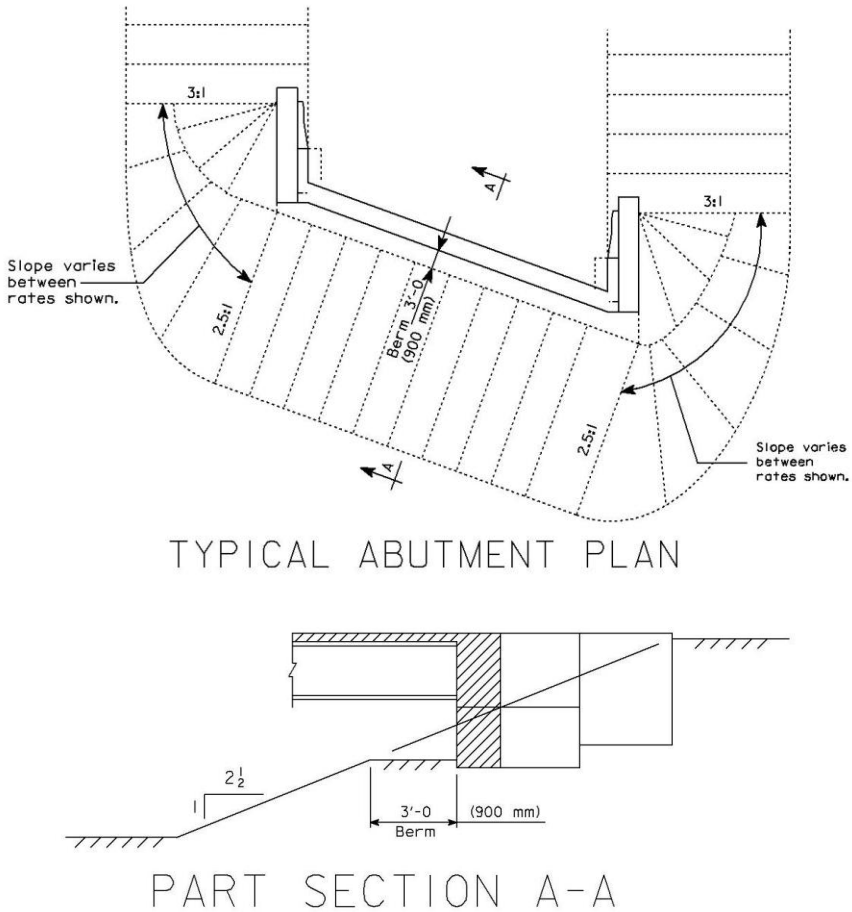

Figure 6.5.4.3.1-1 Abutment and embankment plan and abutment section

In general, keep wing lengths the same unless there would be greater than a 5-foot (1.520-m) difference.

When a wing length for a stub abutment should be longer than the length shown on standard sheets, the designer shall consult the Chief Structural Engineer. Generally the designer will need to provide a long wing without wing footing but with a counterfort and footing supported on piles, as shown in Figures 6.5.4.3.1-2 and 6.5.4.3.1-3. The counterfort footing and piles will need to be designed for vertical and lateral loads, and the wing will need to be reinforced as a simply supported beam to support vertical dead load and lateral live and dead loads.

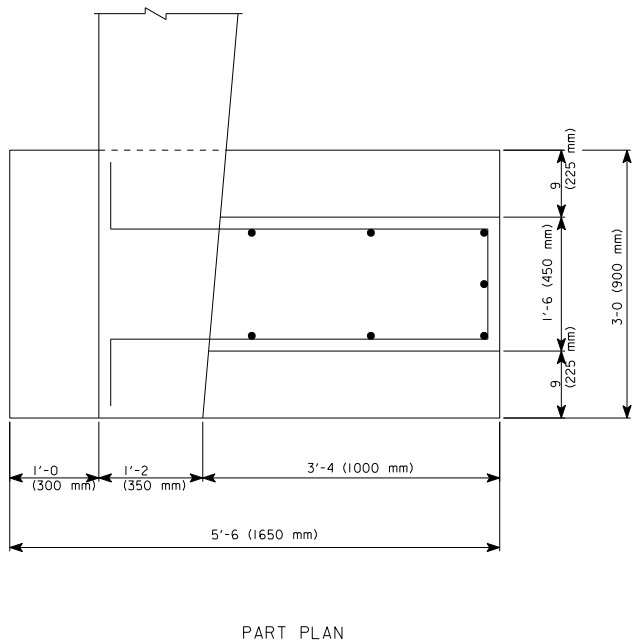

Figure 6.5.4.3.1-2. Plan of counterfort at end of extended wing for a stub abutment

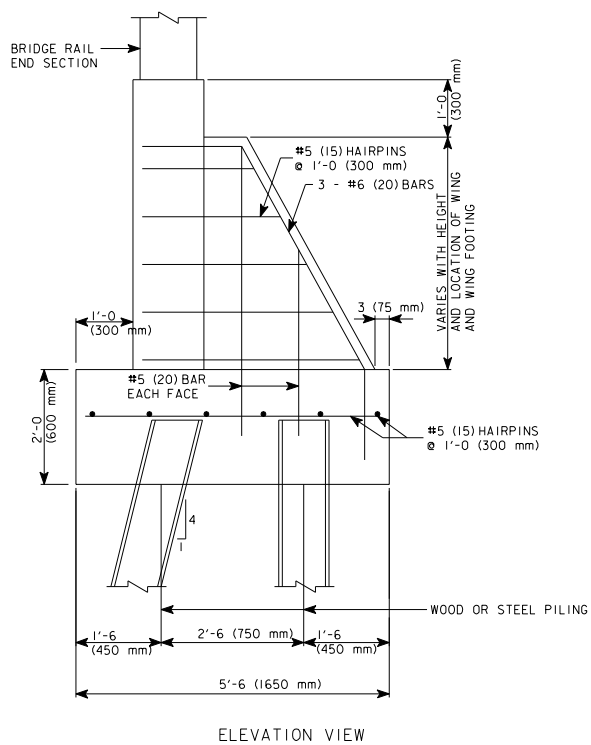

Figure note:

- This figure is at a smaller scale than Figure 6.5.4.3.1-2.

Figure 6.5.4.3.1-3. Elevation of counterfort at end of extended wing for a stub abutment

If the designer determines that a wing for an integral abutment needs to exceed the length available with a standard wing and extensions, the designer shall consult the Chief Structural Engineer. Generally the designer shall investigate a separate wall keyed to, but allowing movement of the integral abutment. Because of the expected movement of an integral abutment the designer shall not attach a wall supported by a counterfort directly to the abutment.

6.5.4.3.2 Detailing

All barrier rail to bridge deck/wing reinforcement for interstate and primary bridges shall be stainless steel. All other reinforcement in the wings, abutment wing extensions, abutment diaphragm wing extensions, and wing extensions shall be epoxy coated.