TABLE OF CONTENTS ~ PILES

6.2 Piles
- 6.2.1 General
  - 6.2.1.1 Policy overview
  - 6.2.1.2 Design information
  - 6.2.1.3 Definitions
  - 6.2.1.4 Abbreviations and notation
  - 6.2.1.5 References
- 6.2.2 Loads
  - 6.2.2.1 Dynamic load allowance [AASHTO-LRFD 3.6.2.1]
  - 6.2.2.2 Downdrag
- 6.2.3 Load application
  - 6.2.3.1 Load modifier [AASHTO-LRFD 1.3.2, 3.4.1]
  - 6.2.3.2 Limit states [AASHTO-LRFD 3.4.1, 3.4.2]
- 6.2.4 Analysis and design
  - 6.2.4.1 Foundation layout [AASHTO-LRFD 10.7.1.2]
  - 6.2.4.2 Pile length [AASHTO-LRFD 10.7.1.3]
  - 6.2.4.3 Contract length
  - 6.2.4.4 Uplift
  - 6.2.4.5 Lateral load [AASHTO-LRFD 10.7.2.4]
  - 6.2.4.6 Target driving resistance
- 6.2.5 Detailing
- 6.2.6 Guidelines by pile type
  - 6.2.6.1 Steel H [AASHTO-LRFD 6.5.4.2, 10.5.5.3.3]
  - 6.2.6.2 Concrete-filled steel pipe
  - 6.2.6.3 Timber [AASHTO-LRFD 8.4.1.3, 8.4.4, 8.5.2.2]
  - 6.2.6.4 Prestressed concrete
- 6.2.7 Nominal geotechnical resistances
- 6.2.8 Soil categories
- 6.2.9 Resistance factors
- 6.2.10 Cohesive soil setup

6.2 Piles

Prior to 2007 the Office of Bridges and Structures used the charts in the Blue Book [BDM 6.2.1.5] for geotechnical design of piles under allowable stress design and the AASHTO Standard Specifications. In 2007 the office moved to an interim LRFD procedure with a single resistance factor of 0.725 fitted to the Blue Book and to an approximate average load factor of 1.45. Now that the LRFD statistical calibration to static pile load tests has been completed by Iowa State University (ISU) in 2012 this section of the LRFD Bridge Design Manual has been rewritten to adopt geotechnical and target driving resistance factors from the research discussed in *Volume IV of Development of LRFD Procedures for Bridge Pile Foundations in Iowa* and from subsequent discussions with the researchers regarding setup in cohesive soil. More basic information about the ISU research is available in earlier Volumes I - III [BDM 6.2.1.5].

The research Volume IV examples have been rewritten to fit the policies in this Bridge Design Manual section and to include typical structural design checks. The examples are available in a separate file on an Office of Bridges and Structures web page as LRFD Pile Design Examples ~ 2016 [BDM 6.2.1.5].

6.2.1 General

Piles directly support bridge substructure components and other transportation-related structures. In addition to the information in this series of articles the designer should review the information for specific bridge substructure components: abutments [BDM 6.5], piers [BDM 6.6], and sign supports [BDM 10.2].

6.2.1.1 Policy overview

Although the office uses a variety of foundation types depending on site and design conditions, the office most often selects pile foundations. Since the 1960s the office has recognized the benefits of jointless bridges with integral abutments. Integral abutments for bridges of typical lengths require the lateral flexibility of pile foundations. Through experience with several pile types the office has determined that steel H-piles provide flexibility, as well as adequate capacity for reasonable driven lengths under typical Iowa site conditions. Then, for construction efficiency and cost, it often is appropriate also to use steel H-piles for pier foundations.

However, in some cases there are other considerations for pile selection. For relatively short bridges where site conditions permit, the designer is encouraged to consider treated timber piles. For site conditions that favor displacement piles and also for pile bents without fully encased piles the designer is encouraged to consider prestressed concrete piles. Appropriate pile choices for typical substructure components are summarized in Table 6.2.1.1.

Table 6.2.1.1. Pile choices for support of substructure components

Substructure Component	Pile Choices
Integral abutment	Steel HP 10x57 (HP 250x85) for PPCB, CWPG, and RSB bridges, HP 10x42 (HP 250x62) for CCS bridges; timber for bridge lengths to 200 feet (61.000 m)
Stub abutment	Steel HP; timber; 12 inch (310 mm) prestressed concrete
Pier	Steel HP; timber; 12 inch (310 mm) prestressed concrete, concrete-filled steel pipe
Pile bent [OBS SS P10L]	Steel HP; 14 or 16 inch (356 or 406 mm) prestressed concrete, 14 or 16 inch (356 or 406 mm) concrete-filled steel pipe

As indicated in the table, for typical design conditions the office recommends the HP 10x57 (HP 250x85) shape when using steel H-piles for integral abutments for pretensioned prestressed concrete beam (PPCB), continuous welded plate girder (CWPG), and rolled steel beam (RSB) bridges [BDM 6.5.1.1.1]. When using steel H-piles for integral abutments for continuous concrete slab (CCS) bridges and for support of other substructure components the office prefers the HP 10x42 (HP 250x62) shape. To avoid construction errors the office recommends that only one of the two HP-10 (HP-250) shapes be used on each project.

For driven piles the overall pile design, contract, and construction process followed by the Iowa Department of Transportation is as follows. The process is modified when one or more of the steps are performed by consultants.

- The Soils Design Section arranges for soil borings and prepares a soils design package for a bridge project.
- Based on the soils design package, designers in the Office of Bridges and Structures prepare the bridge foundation design with an estimated contract length of piling.
- Contractors bid on installation of the contract length, with the expectation that all of the length will be driven even if bearing is obtained at shorter pile lengths.
- The Office of Construction prepares WEAP driving graphs based on the successful contractor's pile driving hammer.
- Inspectors from the Office of Construction observe pile driving using the WEAP driving graphs, prepare logs of the driving, and make field adjustments such as retaps and extensions as needed during pile installation.

In general there are the following pile design considerations under LRFD for the Soils Design Section and the Office of Bridges and Structures:

- Axial compression resistance at the strength limit state,

- Downdrag loads at the strength limit state for embankments that will have significant settlement after piles are driven for abutments,
- Column resistance at the strength limit state for unsupported piles above ground, piles in prebored holes, or piles in scour conditions,
- Axial tension resistance at the strength limit state,
- Lateral load resistance at the strength limit state,
- Geotechnical resistance at the strength limit state,
- Target driving resistance at the strength limit state,
- Construction control method, if wave equation analysis (WEAP) is not appropriate,
- Settlement at the service limit state,
- Lateral movement at the service limit state,
- Overall stability at the service limit state,
- Redundant group vs. single pile resistance,
- Design and check scour at piers, and
- Collision, ice, or seismic loads at the extreme event limit state.

Not all of these design considerations apply to each foundation pile group. For many pile groups only the axial compression resistance, geotechnical resistance, target driving resistance, and construction control method need to be considered, but the designer should be aware of all of the considerations and check all that apply. In general the office bases structural design on the AASHTO LRFD Specifications and bases geotechnical design and pile driving design on recent Iowa State University research and LRFD calibration. The Office of Bridges and Structures relies on the Iowa DOT Soils Design Section for a soils design package consisting of site information, geotechnical analysis, and foundation recommendations and relies on the Iowa DOT Office of Construction for WEAP analysis (the usual construction control) and pile driving inspection.

For structural design there are two conditions that must be satisfied: pile axial resistance down to the tip and pile column resistance for piles without continuous lateral support above ground, in prebored holes, or above scour elevation. For these structural conditions the AASHTO LRFD Specifications provide the appropriate resistance factors and analysis information needed for design, but this manual section and the abutment and pier sections provide design simplifications for typical bridges.

On most Iowa bridge sites, piles derive their load-supporting capacity from both friction and end bearing although, depending on site soil conditions, it is possible to design for either friction bearing or end bearing. In cases where the designer intends to use end bearing in a soil layer, piles should be driven into the layer a sufficient amount to develop the end bearing resistance but not so far as to risk punching into a weaker lower layer. In cases where piles bear on rock they should be driven to seat in the rock.

For typical pile foundations the designer will need to estimate contract length and determine target driving resistance at end of drive (EOD) and at one or more potential times for retaps. Determining these values at the strength limit state will require use of the following information given in this section:

- General soil categories [BDM 6.2.8],
- Nominal unit geotechnical resistances extrapolated from the Blue Book [BDM 6.2.7],
- Geotechnical resistance factors [BDM 6.2.9], and
- Setup factors for cohesive soil [BDM 6.2.10].

The third and fourth items depend on the general soil category and the construction control method. For the ISU LRFD statistical calibration used to determine geotechnical resistance factors, pile load tests were categorized based on soil type in contact with length of pile using a 70% rule. If 70% or more of the pile length in contact with soil was against cohesive soil, the soil category was defined as cohesive. If 70% or more of the pile length in contact with soil was against non-cohesive soil, the category was defined as non-cohesive. Otherwise the category was defined as mixed. The designer then must use these three soil categories when selecting resistance factors. Because prebored holes, downdrag, scour, excavation, and pile extensions in the field affect pile length in contact with soil, the soil category may change depending on the design or construction condition, in which case the designer will need to apply

different resistance factors as needed. Because of the step up or down in resistance factors at changes in soil category the designer will need to use judgment in unusual cases.

The ISU LRFD statistical calibration for geotechnical resistance factors also considered different construction control methods. For typical Iowa DOT projects the construction control method is wave equation analysis (WEAP). In special cases and when there is potential economy in more accurate control, the designer may consider PDA/CAPWAP, planned retap at three days, or static pile load test, but all of these special controls must be approved by the supervising Section Leader. County and city agencies have the option of construction control by the traditional Iowa DOT ENR Formula (modified for LRFD) [IDOT SS 2501.03, M, 2].

In cohesive soil, setup increases the friction bearing resistance of a pile after end of drive (EOD). The ISU LRFD statistical calibration determined the effect of setup for cohesive soils, and that effect has been separated out for determining target nominal driving resistance when the general soil category is cohesive. For mixed and non-cohesive soil categories the setup will be much smaller or negligible, and setup does not need to be considered separately.

The Iowa State University research and LRFD statistical calibration did not cover all driven pile design and construction conditions. For the conditions not covered, such as prestressed concrete and pipe piles, end bearing on rock, tension piles, and lateral loading, the office has made policy decisions considering experience and the AASHTO LRFD Specifications.

For relatively light lateral loading the designer may use assumed nominal resistances given in subsequent articles [BDM 6.2.6.1, 6.2.6.3] or, for greater capacities, the designer may perform an analysis with consideration of soil load-deformation response, pile material, cross section, deflection, and strength criteria. The designer may conduct the analysis with engineering software such as LPILE.

6.2.1.2 Design information

The soils design package provided for each bridge site by the Soils Design Section contains the soil logs needed for pile design [BDM 6.1.2] and location of the borings.

Embankment fills are not typically in-place prior to the soil investigation for new structures. Generally this means fill type and SPT N_{60}-values for the fill are unknown making it difficult to determine friction values for the piling. The Soils Design Section provides the following suggested properties if the specific fill properties are unknown:

- Embankments are commonly constructed with cohesive Class 10 material which could generally be classified as a Firm Silty Clay or similar material with a blow count of 11 bpf.
- Granular embankments are much less common, but for those constructed one may assume fine sand with a blow count of 15 bpf.

Designers may contact the Soils Design Section if additional information is required.

For specification, material, or construction information beyond the information in this manual, the designer should consult the following sources. The most up-to-date versions of the publications are available on the Iowa Department of Transportation web site in the Electronic Reference Library (http://www.erl.dot.state.ia.us), except the last item which is available from the Office of Construction web site.

- Office of Specifications, *Standard Specifications for Highway and Bridge Construction,* Articles 2501, 4165, 4166, and 4167 (http://www.iowadot.gov/erl/current/GS/Navigation/nav.htm
- Office of Materials, Instructional Memoranda, 467, 467.01, 467.03, and 468 (http://www.iowadot.gov/erl/current/IM/navigation/nav.htm
- Office of Construction, *Construction Manual* (http://www.iowadot.gov/erl/current/CM/Navigation/nav.htm
- Office of Construction, *New Bridge Construction Handbook* (http://www.iowadot.gov/construction/structures/bridge_construction_handbook.pdf)

6.2.1.3 Definitions

Iowa DOT ENR Formula in this article and its commentary refers to four LRFD versions of the traditional pile driving formula in the Iowa DOT Standard Specifications [Iowa DOT SS 2501.03, M, 2]. The four versions cover different hammer and pile types. The Iowa DOT Standard Specifications were revised in 2013 to the LRFD versions of the formula and now have a constant in the numerator of the first term equal to 12 or larger.

Natural ground elevation is the average natural ground elevation along the longitudinal centerline of the foundation. See the commentary for this article for discussion [BDM C6.2.1.3].

Redundant pile group is a minimum of five piles for all substructure components except abutments. For abutments a redundant pile group is defined by the office as a minimum of four piles.

Retap (or restrike) occurs when a pile previously driven is hammered again after a time period, usually at least 24 hours. Specific instructions for retaps intended to achieve geotechnical pile resistance are given in the Standard Specifications [IDOT SS 2501.03, M, 5].

6.2.1.4 Abbreviations and notation

CCS, continuous concrete slab

CMP, corrugated metal pipe

CWPG, continuous welded plate girder

EOD, end of drive

F_{SETUP}, setup factor [BDM 6.2.10]

ISU, Iowa State University

I, thickness of soil layer [BDM 6.2.10]

LRFD, load and resistance factor design

MSE, mechanically stabilized earth

N_{60} or N_{60}-value, standard penetration test number of blows per foot (300 mm) corrected to a hammer efficiency of 60%. N_{60} also may be given as **SPT N_{60}-value.** The Iowa DOT is in the process of changing specifications and determining hammer calibrations so that N_{60} values will be reported. Until N_{60} values are available the designer may follow past practice and use uncorrected N-values. See the commentary discussion [BDM C6.2.1.4].

N_a, average N_{60}-value for use with setup chart [BDM 6.2.10]

PPCB, pretensioned prestressed concrete beam

$R_{n\text{-}UP} \geq \Sigma\eta\gamma Q/\varphi_{UP}$, relationship for determining minimum pile length to resist uplift. Individual variables are defined in a subsequent article [BDM 6.2.4.4].

$R_{ndr\text{-}T} \geq (\Sigma\eta\gamma Q + \gamma_{DD}DD)/\varphi_{TAR} + R_{SCOUR}$, relationship for determining target driving resistance. Individual variables are defined in a subsequent article [BDM 6.2.4.6].

RSB, rolled steel beam

SRL, structural resistance level. Four numbered levels are defined in the H-pile article [BDM 6.2.6.1].

$\Sigma\eta\gamma Q + \gamma_{DD} \leq \varphi R_n$, basic LRFD geotechnical check with downdrag for a timber, steel H, prestressed concrete, or concrete-filled steel pipe pile. Individual variables are defined in a subsequent article [BDM 6.2.4.3].

$\Sigma\eta\gamma P + \gamma_{DD}DD \leq n\varphi_c P_n$, basic LRFD structural check in the ground for a steel H-pile. Individual variables are defined in a subsequent article [BDM 6.2.6.1].

$\Sigma\eta\gamma P + \gamma_{DD}DD \leq n\varphi P_n$, basic LRFD structural check in the ground for a timber pile. Individual variables are defined in a subsequent article [BDM 6.2.6.3].

6.2.1.5 References

AbdelSalam, S.S.,K.W. Ng, S. Sritharan, M.T. Suleiman, and M. Roling. *Development of LRFD Procedures for Bridge Pile Foundations in Iowa – Volume III: Recommended Resistance Factors with Consideration of Construction Control and Setup.* Ames: Institute for Transportation, Iowa State University, 2012. (Available on the Internet at: http://www.intrans.iastate.edu/research/documents/research-reports/lrfd_vol_iv_final_w_cvr.pdf)

Dirks, Kermit and Patrick Kam. *Foundation Soils Information Chart, Pile Foundation*. Ames: Iowa Department of Transportation, Office of Road Design, January 1989/September 1994. (a.k.a. **Blue Book**)

Generally with the move to LRFD, the ASD-based Blue Book is out-of-date, and its contents have been revised and moved to the BDM. The Blue Book is available from the Soils Design Section of the Office of Design.

GAI Consultants, Inc. *The Steel Pile, Pile Cap Connection.* Washington, DC: American Iron and Steel Institute (AISI). 1982. (Contact AISI for a reprint, for which there is a charge.)

Green, D., K.W. Ng, K.F. Dunker, S. Sritharan, and M. Nop. *Development of LRFD Procedures for Bridge Pile Foundations in Iowa – Volume IV: Design Guide and Track Examples.* Ames: Institute for Transportation, Iowa State University, 2012. (Available on the Internet at: http://www.intrans.iastate.edu/research/projects/detail/?projectID=-700958271)

Hannigan, P.J., G.G. Goble, G.E. Likins, and F. Rausche. *Design and Construction of Driven Pile Foundations, Volumes I and II, FHWA-NHI-05042.* Washington, DC: National Highway Institute, Federal Highway Administration, 2006.

Ng, K.W., M.T. Suleiman, M. Roling, S.S. AbdelSalam, and S. Sritharan. *Development of LRFD Procedures for Bridge Pile Foundations in Iowa – Volume II: Field Testing of Steel H-Piles in Clay, Sand, and Mixed Soils and Data Analysis.* Ames: Institute for Transportation, Iowa State University, 2011. (Available on the Internet at: http://publications.iowa.gov/13626/)

Office of Bridges and Structures. “LRFD Pile Design Examples ~ 2016”. Ames: Office of Bridges and Structures, Iowa Department of Transportation, 2016.

Office of Construction. *Construction Manual.* Ames: Office of Construction, Iowa Department of Transportation, 2008. (Available on the Internet at: http://www.iowadot.gov/erl/current/CM/Navigation/nav.pdf)

Office of Materials. *Pile Points for Steel H-Piles, Instructional Memorandum 468.* Ames: Office of Materials, Iowa Department of Transportation, October 2011. (Available on the Internet at: http://www.iowadot.gov/erl/current/IM/navigation/index_number.htm)

Office of Materials. *Steel H-Piles, Instructional Memorandum 467.01.* Ames: Office of Materials, Iowa Department of Transportation, October 2011. (Available on the Internet at: http://www.iowadot.gov/erl/current/IM/navigation/index_number.htm)

Office of Materials. *Steel Piles, Instructional Memorandum 467.* Ames: Office of Materials, Iowa Department of Transportation, October 2011. (Available on the Internet at: http://www.iowadot.gov/erl/current/IM/navigation/index_number.htm)

Office of Materials. *Welded and Seamless Steel Pipe Piles, Instructional Memorandum 467.03.* Ames: Office of Materials, Iowa Department of Transportation, October 2011. (Available on the Internet at: http://www.iowadot.gov/erl/current/IM/navigation/index_number.htm)

Roling, M., S. Sritharan, and M. Suleiman. *Development of LRFD Procedures for Bridge Pile Foundations in Iowa – Volume I: An Electronic Database for Pile Load Tests in Iowa (PILOT-IA).* Ames: Institute for Transportation, Iowa State University, 2010. (Available on the Internet at: http://publications.iowa.gov/13624/)

Sunday, Wayne and Kyle Frame. *New Bridge Construction Handbook.* Ames: Office of Construction, Iowa Department of Transportation, 2000. (Available on the Internet at: http://www.iowadot.gov/construction/structures/bridge_construction_handbook.pdf)

6.2.2 Loads

Pile loads must be considered with respect to the substructure component supported by the piles. Abutment and pier articles [BDM 6.5 and 6.6] cover additional load topics, and the designer should review those articles in addition to the articles below.

For standard abutment, footing, and pile cap details the office assumes axial vertical loads transmitted to piles. If nonstandard pile head details cause significant eccentricity or moment, the designer shall consider those effects in design.

When lateral loads are applied to piles the designer shall consider both lateral forces and lateral displacements [BDM 6.2.4.5].

6.2.2.1 Dynamic load allowance [AASHTO-LRFD 3.6.2.1]

The AASHTO LRFD Specifications [AASHTO-LRFD 3.6.2.1] note that the dynamic load allowance (IM) need not be applied to foundation components that are entirely below ground level and in full contact with soil. As a conservative design simplification, the office requires the designer to include the dynamic load allowance for the entire length of a pile that has a portion unsupported by soil, such as a pile in a pile bent or an integral abutment pile in a prebored hole filled with bentonite slurry.

However, the designer shall not include the dynamic load allowance on a stub abutment pile in a prebored hole. Because scour generally is a temporary condition the designer also should not include dynamic load allowance on a pile being checked under scour conditions.

6.2.2.2 Downdrag

Downdrag generally occurs at abutments when placement of approach fill causes settlement of compressible soils below the fill. Downdrag may be avoided if the embankment can be placed a sufficient time before abutment piles are driven and, in that case, the designer shall include CADD Note E175/M175 [BDM 13.3.2] on the plans with a minimum time period determined by the Soils Design Section.

If abutment piles must be placed before the approach fill settlement has occurred, the designer shall consider downdrag forces as directed by the Soils Design Section for soils that are labeled compressible in the soils package for the bridge project. Downdrag forces are caused by negative skin friction and add to the pile loads, as well as eliminate positive friction bearing in the downdrag zone. Downdrag forces may be reduced by use of prebored holes with bentonite fill.

Large downdrag forces at abutments with steel H-piles designed for Structural Resistance Level 1 (SRL-1) [BDM 6.2.6.1] often require significantly more piles or larger piles than similar abutments which do not need to be designed for downdrag. In order to mitigate the effects of downdrag on the number and/or size of steel H-piles at abutments to some degree, the office allows designers to increase the SRL-1 nominal structural resistances in BDM Table 6.2.6.1-1 by 25%. The 25% increase applied to SRL-1 essentially creates SRL-1.5 which is halfway between SRL-1 and SRL-2. [For example, the nominal structural resistance for a typical Grade 50 HP 10x57 (HP 250x85) pile in BDM Table 6.2.6.1-1 would increase from a SRL-1 value of 243 k (1080 kN) to a SRL-1.5 value of 304 k (1352 kN).] The total factored axial compression load plus the factored downdrag load shall be less than or equal to the factored structural resistance of SRL-1.5.

Downdrag forces shall be determined from the nominal geotechnical resistance chart for friction bearing [BDM Table 6.2.7-2] in accordance with policy in a subsequent article [BDM 6.2.4.3].

Battered piles shall not be used if downdrag will occur.

6.2.3 Load application

6.2.3.1 Load modifier [AASHTO-LRFD 1.3.2, 3.4.1]

Load factors shall be adjusted by the load modifier, which accounts for ductility, redundancy, and operational importance [AASHTO-LRFD 1.3.2, 3.4.1]. For typical pile foundations the load modifier shall be taken as 1.0.

6.2.3.2 Limit states [AASHTO-LRFD 3.4.1, 3.4.2]

For a typical pile foundation, the designer shall consider the following load combinations for the supported structural component, as applicable [AASHTO-LRFD 3.4.1]. For design of abutment foundations the designer should use judgment to exclude any combinations that will not control.

- Strength I, superstructure with vehicles but without wind
- Strength III, superstructure with wind exceeding 55 mph (89 kph)
- Strength V, superstructure with vehicles and wind at 55 mph (89 kph)
- Extreme Event II, superstructure with reduced vehicles and vehicular collision, ice, or hydraulic events
- Service I, superstructure with vehicles and wind at 55 mph (89 kph)

In general the designer need not investigate Service I limit state unless settlement, lateral movement, or overall stability is a concern. Overall stability will be analyzed by the Soils Design Section as needed.

Except for unusual situations, such as eccentric loads during staged construction, the designer need not investigate construction load combinations [AASHTO-LRFD 3.4.2].

Design of the pile foundation shall be based on the resulting critical combinations including maximum axial force, maximum moment, and maximum shear.

6.2.4 Analysis and design

Pile section and contract length shall be determined by the load and resistance factor design (LRFD) method as modified in this and other manual sections, considering structural resistance, geotechnical resistance, target driving resistance, and other design considerations applicable to the pile foundation design [BDM 6.2.1.1].

- **Structural resistance:** To determine the required pile section and/or number of piles for typical pier and abutment design, the designer shall compare the factored axial load per pile or per pile group with the factored nominal structural resistance. Specific guidelines for structural design by pile type are given in a subsequent article [BDM 6.2.6], and guidelines for integral abutment piles are given in the abutment section [BDM 6.5.1.1.1]. Piles that extend above ground such as those in pile bents either need to be selected in accordance with the P10L standard or need to be checked structurally for the column condition considering scour using the guidelines given in this manual [BDM 6.6.4.2]. Pier piles subject to scour need to be checked for the column condition below the footing [BDM 6.6.4.1.3.1].
- **Geotechnical resistance:** To determine the required contract pile length the designer shall compare the factored axial load per pile with the factored nominal geotechnical resistance determined from the charts [BDM Table 6.2.7-1 and 6.2.7-2]. Geotechnical resistance factors are dependent on the method of construction control and are given after the charts [BDM 6.2.9]. Additional pile length guidelines are given below [BDM 6.2.4.1]. Pier piles subject to scour need to be checked for the loss of soil support [BDM 6.6.4.1.3.1].
- **Target driving resistance:** The designer also shall determine the target nominal driving resistance based on the method of construction control, which usually will be WEAP for state projects [BDM 6.2.4.6]. Depending on the general soil type in contact with the pile, the designer also will need to specify one or more nominal retap resistances.

Specific steps in the overall design and construction process for typical bridges are outlined below and followed in design examples. The steps may be modified depending on office practice and bridge project.

(1) Develop bridge situation plan (or TS&L, Type, Size, and Location).

(2) Develop soils package, including soil borings and foundation recommendations.

(3) Determine pile layout, pile loads including downdrag, and other design requirements. This step includes structural checks.

(4) Estimate nominal geotechnical resistance for friction and end bearing.

(5) Select resistance factor(s) to estimate pile length based on the soil profile and construction control.

(6) Calculate required nominal pile resistance, R_n.

(7) Estimate contract pile length, L, considering downdrag, scour, pile uplift, lateral loading, and unbraced length, if applicable.

(8) Estimate target nominal pile driving resistance, $R_{ndr\text{-}T}$.

(9) Prepare CADD notes for bridge plans.

(10) Check the design.

(11) Request and check contractor's hammer data, and prepare bearing graph for WEAP control or other necessary items for alternate methods of construction control.

(12) Observe construction, record driven resistance, and resolve any construction issues.

6.2.4.1 Foundation layout [AASHTO-LRFD 10.7.1.2]

For each foundation the designer should attempt to use the minimum number of piles required for structural support. Individual pile layouts for each foundation are preferred for typical bridges, and the designer should not add extra piles to replicate foundations unless there is a definite advantage such as cost and/or time savings for accelerated bridge construction.

Maximum centerline pile spacing shall be 8 feet (2.440 m), and minimum centerline pile spacing shall be the larger of 2.5 feet (760 mm) or 2.5 times the pile size [AASHTO LRFD 10.7.1.2]. Based on soil conditions and additional guidelines below, piles shall be spaced at a centerline distance that does not exceed the maximum or minimum limits. The minimum centerline distance to a footing edge shall be 1.5 feet (460 mm).

The minimum number of piles for an integral abutment shall be one pile per beam plus one pile per wing extension.

For integral abutments the office requires that all piles be driven vertically, but for all other substructure elements the designer should batter some of the piles as indicated on standard sheets. Typically the front row and wing wall piles for stub abutments, the perimeter piles for frame or T-pier footings, and the end piles for pile bents should be battered. The preferred batter for stub abutments and piers is 1 horizontal to 4 vertical, with 1 to 6 as an acceptable alternative, and the preferred batter for pile bents is 1 horizontal to 12 vertical. Normally battered piles shall be oriented such that any soil settlement will be resisted by strong-axis pile bending. The designer shall check battered piles for interference with temporary structures such as cofferdams, as well as for permanent obstructions such as utility lines and foundations.

When a mechanically stabilized earth (MSE) retaining wall is placed in front of integral abutment piles, the piles typically are to be sleeved with corrugated metal pipe (CMP). For compaction of the fill between the

sleeves and placement of the metal strip reinforcing for the wall, a minimum sleeve clear distance of 24 inches (600 mm) is preferred. With the typical 24-inch (600-mm) diameter CMP and a 24-inch clear distance, the centerline pile spacing will be 4 feet (1.220 m). Therefore, the designer needs to consider the minimum pile spacing carefully for integral abutments behind MSE walls.

For integral abutments the office also requires a minimum of 36 inches (900 mm) clear between the back of the MSE wall and the face of the CMP sleeves. The clearance is intended to permit compaction of the backfill, to avoid sharp angles in the reinforcing straps, and to prevent the bentonite in the CMP sleeves from freezing. For stub abutments the clear distance may be less than 36 inches (900 mm) subject to requirements of the MSE wall vendor. When the MSE wall is built in two stages and/or when utility lines are in the backfill zone the designer shall determine clearances based on discussions with the MSE wall vendor.

6.2.4.2 Pile length [AASHTO-LRFD 10.7.1.3, 10.7.3.9]

In addition to the basic geotechnical resistance check at the strength limit state [BDM 6.2.4.3], any applicable uplift considerations [BDM 6.2.4.4], and any applicable lateral load considerations [BDM 6.2.4.5], contract pile length will depend on various site and substructure factors. The design penetration for any pile should be a minimum of 10 feet (3.050 m) into hard cohesive or dense granular soil and a minimum of 20 feet (6.100 m) into soft cohesive or loose granular soil. Piles driven through embankments should penetrate 10 feet (3.050 m) into original ground unless refusal on bedrock or a competent layer occurs at a lesser elevation [AASHTO-LRFD 10.7.1.3]. Piles subject to uplift shall be driven the minimum length to ensure adequate geotechnical tension resistance.

In order to relieve stresses due to lateral movement, piles for integral abutments for bridges longer than 130 feet (39.600 m) shall be driven in prebored holes. Abutment piles also may be driven in prebored holes to reduce downdrag due to settlement of the abutment berm. Guidelines for prebored hole depths are given in Table 6.2.4.1-1.

Table 6.2.4.2-1. Prebored hole depths for abutments

Abutment type	Hole depth feet (m)	Comments
Integral	10 (3.048) (1)	Standard depth
Integral	15 (4.572)	Maximum depth without approval of supervising Section Leader
Stub	20 (6.096)	Maximum depth without approval of supervising Section Leader

Table note:

(1) If bedrock is less than 15 feet from bottom of footing, prebored hole depth may be reduced with consideration of bridge length, but the designer shall discuss the condition with the supervising Section Leader.

Pile length shall be determined so that the geotechnical resistance due to friction, end bearing, or a combination of friction and end bearing will be achieved below the lowest of the following elevations:

- Bottom of predrilled hole (abutments) [BDM Tables 6.2.4.2-1, 6.5.1.1.1-1, and 6.5.1.1.1-2],
- Bottom of compressible fill when berm consolidation delays are not permissible (abutments),
- Bottom of pile encasement (pile bents) [BDM 6.6.4.2.2],
- Design scour elevation (piers) [BDM 6.6.4.1.3.1], or
- Check scour elevation (piers) [BDM 6.6.4.1.3.1].

Additional considerations for determining the pile length are the following.

- Natural or original ground elevation is the average natural ground elevation along the longitudinal centerline of the foundation.
- Heads of piles shall be embedded in abutments, footings, bent caps, and pier caps the length given in the pile detailing article [BDM 6.2.5].

- The heads of steel H-piles, steel pipe piles, and timber piles shall be trimmed one foot (305 mm) to account for driving damage.
- If fill is placed above a compressible soil layer, such as at an abutment, piles will be subjected to downdrag forces that need to be included in design.
- The bentonite slurry [IDOT SS 2501.03, Q] required for filling of a prebored hole for a pile shall be assumed to provide no vertical or lateral support to the pile. The slurry also shall be assumed to cause no downdrag forces.
- A pile battered no more than 1 horizontal to 4 vertical may be assumed to carry the same vertical load as a pile driven vertically; there need be no reduction for angle of the pile.
- If several pile types or sizes are feasible, the designer should discuss the alternatives with the supervising Section Leader. Determining the best or most economical alternative involves pile availability and cost, driving equipment availability and cost, and structural factors.
- For steel H-piles and timber piles, length shall be specified to the nearest 5-foot (1.500-m) increment. For prestressed concrete piles, length shall be specified to the nearest 1-foot (300 mm) increment, except that pile extensions shall be specified to the nearest 5-foot (1.500 m) increment.
- To determine an end bearing resistance value [BDM Table 6.2.7-1] the designer should average the N_{60}-values over a distance eight feet above and below the pile tip.
- If a pile is designed with end bearing resistance in soil the pile shall be driven a minimum of 5 feet (1.500 m) into the layer. The designer also shall ensure that the pile tip will not punch through the bearing layer into a weaker layer.
- If an H-pile is designed with end bearing resistance in bedrock the pile should be driven with penetration as indicated in Table 6.2.4.1-2. Prestressed concrete and steel pipe piles should be driven to bedrock only with approval of the Soils Design Section. Timber piles shall not be driven to bear on bedrock.

Table 6.2.4.2-2. Recommended H-pile penetration into bedrock

Rock classification	**Recommended penetration, feet (m)**
Broken limestone	8 - 12 (2.400 – 3.600) where practical
Shale or firm shale	8 – 12 (2.400 – 3.600)
Medium hard shale, hard shale, or siltstone with 50 ≤ N ≤ 200	4 – 8 (1.200 – 2.400)
Sandstone, siltstone, or shale with N ≥ 200	3 (0.900)
Solid limestone	1 – 3 (0.300 – 0.900)

- In the unusual case that a frame pier or T-pier pile foundation meets all three of the following conditions the designer shall evaluate the axial friction resistance for the piles with the appropriate group efficiency reduction factor [AASHTO LRFD 10.7.3.9].
    (a) The footing is not in contact with the ground, or scour may remove soil below the footing.
    (b) Piles are in cohesive soil and the soil near the surface below the footing has unconfined shear strength less than 2 ksf (95 kPa) (which approximately correlates with N-values less than 16).
    (c) The footing has no battered piles.

  If less than 1.0, the efficiency factor will increase pile length or require redesign of the foundation. The efficiency factor does not apply to typical integral abutments, stub abutments, pile bents, frame pier foundations with battered piles, and T-pier foundations with battered piles. (See the Commentary for this article for further information regarding this policy.)
- Pile group efficiencies in cohesive soil are known to be reduced for a time period after driving due to excess pore water pressure. If accelerated bridge construction (ABC) requires that piles in

cohesive soil are loaded very soon after driving the designer shall investigate the need for lengthening piles or otherwise redesigning the foundation.

6.2.4.3 Contract length [AASHTO LRFD 10.7.3.9]

Because resistance factors will vary with the method of construction control the designer will need to select the control method before determining the pile contract length. The WEAP method is used for typical state projects, and Iowa counties and cities may use either WEAP or the Iowa DOT ENR Formula modified for LRFD. For large and special projects other methods of construction control are available [BDM 6.2.9].

Contract pile length for downward load shall be determined by using the soil categories [BDM 6.2.8], LRFD nominal geotechnical resistance charts [BDM 6.2.7], and resistance factors [BDM 6.2.9]. Depending on subsurface conditions, the pile resistance may be the

- accumulated skin friction resistance through several soil layers,
- the end bearing resistance in a dense soil layer or rock, or
- the accumulated skin friction resistance plus end bearing resistance in a dense soil layer or rock.

The basic LRFD relationship used to determine the contract length for an individual pile is the following:

$$\Sigma\eta\gamma Q + \gamma_{DD}DD \leq \varphi R_n$$

It is rearranged for design to:

$$R_n \geq (\Sigma\eta\gamma Q + \gamma_{DD}DD)/\varphi$$

Where:

R_n = nominal geotechnical resistance determined from unit values for friction [BDM Table 6.2.7-2] and/or end bearing [BDM Table 6.2.7-1]. In the case of downdrag or scour the nominal resistance above the downdrag elevation or scour elevation shall be neglected.

For frame pier or T-pier pile foundations with a gap below the footing, with piles in soft cohesive soil, and without battered piles [BDM 6.2.4.2], the designer shall multiply the nominal geotechnical friction resistance (but not the end bearing resistance) by the appropriate group efficiency reduction factor [AASHTO LRFD 10.7.3.9]. This case or a case where piles in cohesive soil are spaced less than 2.5 diameters or 2.5 feet (760 mm) apart also requires the designer to check the equivalent pier resistance [AASHTO LRFD 10.7.3.9].

$\Sigma\eta\gamma Q$ = total factored axial compression load per pile determined by usual LRFD procedures for a strength limit state, kips. If the pile resistance is partially due to end bearing on rock the $\Sigma\eta\gamma Q$ term needs to be split so that the fraction due to end bearing (R_{EB}/R_n) is divided by $\varphi = 0.70$ and the fraction due to friction bearing (R_{FB}/R_n) is divided by the appropriate φ from BDM Table 6.2.9-1. The formula then becomes:

$$R_n \geq (R_{EB}/R_n)\Sigma\eta\gamma Q/0.70 + (R_{FB}/R_n)\Sigma\eta\gamma Q/\varphi + \gamma_{DD}DD/\varphi$$

γ_{DD} = downdrag load factor = 1.0

DD = downdrag load. The load is determined from friction bearing values [BDM Table 6.2.7-2]. If there is no downdrag this term is taken as zero

φ = geotechnical resistance factor selected from information given in BDM Table 6.2.9-1 for the site soil category and method of construction control

Examples for determining contract length are given in LRFD Pile Design Examples ~ 2016 [BDM 6.2.1.5]. The Track 1 examples cover typical projects on the state highway system with WEAP construction control. Track 2 examples cover local agency projects that use Iowa DOT ENR Formula control. Track 3 examples cover special cases of construction control that may occur on large and unusual projects.

After contract length and other features of design are determined the designer should communicate the design on the plans using CADD Notes E818 and E819 for abutment piles and E718 and E719 for pier piles [BDM 13.8].

6.2.4.4 Uplift

Under all limit states the designer may consider uplift on piles provided that piles are sufficiently anchored in the footing and have sufficient soil-to-pile friction resistance for the uplift force. Bond resistance between footing concrete and an H-pile and resistance factors are discussed in the steel H-pile article [BDM 6.2.6.1].

The designer shall check the geotechnical resistance to uplift for piles in tension as follows:

$$\mathbf{R_{n\text{-}UP} \geq \Sigma\eta\gamma Q/\varphi_{UP}}$$

Where:

$\mathbf{R_{n\text{-}UP}}$ = nominal geotechnical resistance determined from unit values for friction [BDM Table 6.2.7-2]

$\mathbf{\Sigma\eta\gamma Q}$ = total factored axial tension load per pile determined by usual LRFD procedures for a strength limit state, kips.

$\boldsymbol{\varphi_{UP}}$ = geotechnical resistance factor selected from information given in BDM Table 6.2.9-2 for the site soil category and method of construction control

If the check is successful the designer shall determine the minimum required length of pile to resist the uplift load and include that minimum length on the plans in the appropriate CADD Note, E819 or E719 [BDM 13.8.2].

Track 1, Example 4 in LRFD Pile Design Examples ~ 2016 [BDM 6.2.1.5] is written for a case that involves uplift on a steel H-pile.

6.2.4.5 Lateral load [AASHTO-LRFD 10.7.2.4]

For typical bridge piers and stub abutments supported on steel H-piles or timber piles the designer may check lateral loading of piles at the service and strength limit states using traditional nominal resistances given in following articles [BDM 6.2.6.1, 6.2.6.3]. Piles in typical integral abutments that meet the conditions given in the abutment section [BDM 6.5.1.1.1] need not be checked for lateral load.

If the checks using nominal values fail or if the pile conditions require further analysis, the office prefers that the designer use the program LPILE or equivalent software to check deflection at the service limit state and moment and shear at the strength and extreme event limit state. Group effects shall be considered [AASHTO-LRFD 10.7.2.4].

If using LPILE to check pier or stub abutment piles for typical bridges, the designer may assume a maximum service limit state lateral deflection of 0.25 inch (6 mm) for a single pile or 0.75 inch (19 mm) for a pile group. Lateral deflection at the top of a pier should be limited to 1.50 inches (38 mm). If these limits are exceeded the designer shall consult with the supervising Section Leader.

See the commentary for a background discussion [BDM C6.2.4.5] and steel H-pile examples [BDM C6.2.6.1].

6.2.4.6 Target driving resistance

The designer shall determine the target nominal driving resistance that will be used in the field to ensure adequate pile bearing resistance. In the case of cohesionless or mixed soils with WEAP control [BDM 6.2.8] or all soils with Iowa DOT ENR Formula control a single target driving resistance shall be used at end of drive (EOD) and for retaps one or more days after EOD.

$$R_{ndr\text{-}T} \geq (\Sigma\eta\gamma Q + \gamma_{DD}DD)/\varphi_{TAR} + R_{SCOUR}$$

Where:

$R_{ndr\text{-}T}$ = nominal target driving resistance at a defined time. $R_{ndr\text{-}EOD}$ is the target driving resistance at EOD; $R_{ndr\text{-}1}$ is the target driving resistance at one day, etc. For cohesionless and mixed soil with WEAP control and all soils with Iowa DOT ENR Formula control R_{ndr} will not vary with time: $R_{ndr\text{-}EOD} = R_{ndr\text{-}1} = R_{ndr\text{-}3}$ …

ΣηγQ = total factored axial compression load per pile determined by usual LRFD procedures for a strength limit state, kips.

γ_{DD} = downdrag load factor = 1.0

DD = downdrag load. The load is determined from friction bearing values [BDM Table 6.2.7-2]. If there is no downdrag this term is taken as zero

φ_{TAR} = target driving resistance factor selected from information given in BDM Table 6.2.9-3 for the site soil category and method of construction control.

R_{SCOUR} = nominal friction resistance for the soil that is subject to scour determined from unit values for friction [BDM Table 6.2.7-2]

In the case of H-piles and cohesive soils with WEAP construction control the designer shall consider the benefit of setup in the determination of the target driving resistance except in the following cases:

- Piles driven to bedrock,
- Piles subjected to downdrag,
- Piles in contact with cohesive soil with an overall average N of less than 5, and
- Piles used in accelerated bridge construction.

When setup is considered designers will need to determine multiple target driving resistances because setup will increase resistance with time. (Do not use this procedure for other pile types, mixed or cohesionless soils, or Iowa DOT ENR Formula construction control.) The setup increase, however, is limited by φ_{EOD} as indicated below.

The relationship to determine target driving resistance at EOD for H-piles and cohesive soil with WEAP control is as follows:

$$R_{ndr\text{-}EOD} \geq (\Sigma\eta\gamma Q + \gamma_{DD}DD)/\varphi_{TAR} + R_{SCOUR}$$

Where:

$$\varphi_{TAR} = \varphi_{EOD} + \varphi_{SETUP}(F_{SETUP\text{-}7}-1) \leq 1.0$$

φ_{EOD} and φ_{SETUP} are taken from BDM Table 6.2.9-3, and $F_{SETUP\text{-}7}$ is taken from the 7-day curve in Figure 6.2.10 based on the average SPT N_{60}-value, N_a , determined as discussed in BDM 6.2.10.

$\mathbf{R_{ndr\text{-}1}}$ for retap at one day is the smaller of:

$$(\Sigma\eta\gamma Q + \gamma_{DD}DD)/\varphi_{EOD} + R_{SCOUR}$$

and

$$(R_{ndr\text{-}EOD})(F_{SETUP\text{-}1})$$

Where $F_{SETUP\text{-}1}$ is taken from the 1-day curve in Figure 6.2.10

$\mathbf{R_{ndr\text{-}3}}$ for retap at three days is the smaller of:

$$(\Sigma\eta\gamma Q + \gamma_{DD}DD)/\varphi_{EOD} + R_{SCOUR}$$

and

$$(R_{ndr\text{-}EOD})(F_{SETUP\text{-}3})$$

Where $F_{SETUP\text{-}3}$ is taken from the 3-day curve in Figure 6.2.10

$\mathbf{R_{ndr\text{-}7}}$ for retap at seven days is determined in a similar way.

For H-pile retaps in cohesive soils the first of the two retap quantities, which is not based directly on setup, often will limit the target driving resistance for all retaps one day and later. In that case the designer will need to specify only a nominal driving target for EOD and a second nominal driving target for retap at one or more days. In unusual cases the designer may need to specify three nominal driving targets, one for EOD, one for one-day retap, and one for three-day or more retap.

Examples for determining target driving resistance are given in LRFD Pile Design Examples ~ 2016 [BDM 6.2.1.5]. The Track 1 examples cover typical projects on the state highway system with WEAP construction control. Track 2 examples cover local agency projects that use Iowa DOT ENR Formula control. Track 3 examples cover special cases of construction control that may occur on large and unusual projects.

After target driving resistance and other features of design are determined the designer should communicate the design on the plans using CADD Notes as follows:

- Abutment notes E818 and E819 [BDM 13.8.2], and
- Pier notes E718 and E719 [BDM 13.8.2].

Except in unusual cases the pile driving sequence will be governed by the Office of Construction's Construction manual, Article 11.22.

6.2.5 Detailing

Piles shall be embedded in substructure elements and shall have the head reinforcing listed in Table 6.2.5.

Table 6.2.5. Minimum pile embedment and pile head reinforcing

Substructure element	Minimum embedment	Pile head reinforcing
Integral abutment for A or B pretensioned prestressed concrete beams (PPCBs)	2 feet (600 mm)	Spiral (1)
Integral abutment for C, D, BTB, BTC, BTD, or BTE pretensioned prestressed concrete	2 feet (600 mm)	Spiral (1) and bent p bars (2)

beams (PPCBs)		
Integral abutment for steel plate girders	2 feet (600 mm)	Spiral (1) (3) and bent p bars (2) (3)
Stub abutment on timber piles	2 feet (600 mm)	Spiral (3)
Stub abutment on steel H-piles	2 feet (600 mm)	None (4)
Frame pier or T-pier footing	1 foot (300 mm)	None (3)
Continuous concrete slab pile bent cap (not monolithic with slab)	1.5 feet (460 mm)	None (3)
Continuous concrete slab pile bent cap (monolithic with slab)	1 foot (300 mm)	Cap steel (bent dowels) (5)

Table notes:

(1) Spiral is placed around each pile head as detailed on standard sheets [OBS SS 2078-2091]. The spiral should not be epoxy coated.
(2) For the bent p bars see the Abutment Pile Plan on standard sheets [OBS SS 2085-2091].
(3) No standard sheet is available.
(4) See standard sheets for C or D beams [OBS SS 2092-2105].
(5) Cap steel (bent dowels) is detailed on a standard sheet [OBS SS P10L].

For pier footings with reinforcing placed directly above H-pile, pipe pile, or timber pile heads, plans shall include a note requiring that all battered piles be trimmed to a horizontal line to aid in placement of reinforcement. Prestressed concrete piles should not be trimmed.

For projects involving the Excavate and Dewater bid item the E832 (M832) CADD Note [BDM 13.8.2] shall be included on the plans.

6.2.6 Guidelines by pile type

For information on selecting pile type for integral abutments see the guidelines in the integral abutment article [BDM 6.5.4.1.1].

6.2.6.1 Steel H [AASHTO-LRFD 6.5.4.2, 10.5.5.3.3]

Steel H-piles are feasible in most Iowa soils and may attain geotechnical resistance through end bearing, friction bearing, or a combination of end and friction bearing.

Steel H-piles shall be of material meeting ASTM A 572/A 572M Grade 50 (345) [IDOT SS 4167.01, A, OM IM 467.01], unless an exception is approved by the supervising Section Leader.

The basic structural check for typical integral abutment, stub abutment, and pier H-piles is given below. The check represents an axial force condition at the bottom of a pile, with consideration of the potential for driving damage.

$$\Sigma\eta\gamma P + \gamma_{DD} DD \leq n\varphi_c P_n$$

$\Sigma\eta\gamma P$ = total factored axial load per pile or per pile group determined by usual AASHTO LRFD procedures for a strength limit state, kips

γ_{DD} = downdrag load factor = 1.0

DD = downdrag load. The load is determined from friction bearing values [BDM Table 6.2.7-2]. If there is no downdrag this term is taken as zero

n = number of piles

φ_c = 0.6 for normal driving. For unusually severe driving conditions requiring driving points the Soils Design Section in consultation with the Chief Structural Engineer may recommend φ_c = 0.5 [AASHTO-LRFD 6.5.4.2].

P_n = nominal pile structural resistance at the strength limit state, kips. Structural resistances for H-piles are given in Table 6.2.6.1-1.

In order to fit LRFD H-pile design to previous practice under the AASHTO Standard Specifications, four Structural Resistance Levels (SRLs) are defined as follows.

- Structural Resistance Level – 1 (SRL-1) is the resistance based on an average load factor, γ, of 1.45, an allowable stress of 6 ksi (41 MPa), and a resistance factor, φ_c, of 0.6. SRL-1 shall be used for abutment or pier piles with the following conditions.
    - H-piles that tip out in soils such as alluvial, loess, and similar soils and are designed for friction only.
    - H-piles that tip out in soil and are designed for friction and end bearing supported by good-quality glacial clays.
    - H-piles that are driven into rock and are designed for end bearing on rock such as shale and weathered limestone with consistent average N of at least 100.

- Structural Resistance Level – 2 (SRL-2) is the resistance based on an average load factor, γ, of 1.45, an allowable stress of 9 ksi (62 MPa), and a resistance factor, φ_c, of 0.6. SRL-2 shall be used for abutment or pier piles with the following conditions.
    - H-piles that are driven into rock and are designed for end bearing on uniform rock such as medium hard to hard limestone or similar material with consistent N of at least 200.
    - H-piles that tip out in soils with at least 50 feet (15.250 m) of penetration into good-quality glacial clays, with approval of the Soils Design Section. Good-quality glacial clay, in this instance, is defined as glacial clays with at least double-digit blow counts.
    - H-piles that are driven into rock and are designed for a combination of friction and end bearing on rock with an N of 100 to 200, with approval of the Soils Design Section. The allowable stress of 9 ksi (62 MPa) is typically achieved from 3 ksi (21 MPa) of skin friction in good-quality soils above the rock and from 6 ksi (41 MPa) in end bearing on rock.

- Structural Resistance Level -- 3 (SRL-3) is the resistance based on an average load factor, γ, of 1.45, an allowable stress of 12 ksi (83 MPa), and a resistance factor, φ_c, of 0.6. SRL-3 shall be used only for pier piles with the following conditions.
    - H-piles that are driven into rock and are designed for end bearing on uniform good-quality rock such as medium hard to hard limestone with consistent and uniform N of at least 200, with drivability analysis during design and with approvals of the Soils Design Section and the Assistant Bridge Engineer.
    - H-piles that are driven into rock and are designed for a combination of friction and end bearing on rock with an N of at least 200, with drivability analysis during design and with approvals of the Soils Design Section and the Assistant Bridge Engineer. The allowable stress of 12 ksi (83 MPa) is typically achieved from 3 to 6 ksi (21 to 41 MPa) of skin friction in good-quality soils above the rock and from 6 to 9 ksi (41 to 62 MPa) in end bearing on rock.

- Structural Resistance Level -- 4 (SRL-4) is the resistance based on an average load factor, γ, of 1.45, an allowable stress of 15 ksi (103 MPa), and a resistance factor, φ_c, of 0.6. SRL-4 shall be used only for pier piles with the following conditions.
    - H-piles that are driven into rock and are designed for end bearing on uniform and consistent high-quality rock such as medium hard to hard limestone with consistent and uniform N of at least 200 that has been cored and tested sufficiently to verify the rock's consistency and suitability (minimum recovery of 90% and minimum RQD of 80%), with drivability analysis during design and with approvals of the Soils Design Section and the Assistant Bridge Engineer. This option is allowed only on sites with no known

environmental problems, and where corrosion and deterioration considerations as detailed in AASHTO LRFD Article 10.7.5 have been addressed, with design-phase corrosion testing on the soil and rock supporting layers performed as applicable. Construction-phase PDA testing is required. Lateral load analysis through the overburden soils must be performed and produce acceptable results. A design-phase pile load test at each site should be considered. This option is considered appropriate primarily on large-scale projects where significant cost savings ($100,000 or more) could be realized over SRL-3. The aforementioned cost savings do not consider the costs of the additional testing required for SRL-4.

The geotechnical resistances for end bearing in bedrock in Table 6.2.7-1 are correlated to SRL-1 and SRL-2. The nominal geotechnical resistance of 12 ksi (83 MPa) for bedrock with N of 100 to 200 corresponds with the SRL-1 limit. The nominal geotechnical resistance of 18 ksi (124 MPa) for bedrock with N greater than 200 corresponds with the SRL-2 limit. H-pile designs based upon SRL-3 and SRL-4 require Soils Design Section approval of nominal geotechnical resistances for end bearing in bedrock of 24 ksi (165 MPa) and 30 ksi (207 MPa), respectively. The SRL-3 and SRL-4 values are not included in Table 6.2.7-1 since they require additional evaluation by the Soils Design Section before being used.

At the four SRLs, Table 6.2.6.1-1 gives the nominal structural resistances for typical H-pile sections.

Table 6.2.6.1-1. Nominal structural resistance for typical Grade 50 H-piles (1)

H-pile section	Nominal Structural Resistance Level – 1, P_n, kips (kN) (2) (6)	Nominal Structural Resistance Level - 2, P_n, kips (kN) (3) (6)	Nominal Structural Resistance Level - 3, P_n, kips (kN) (4) (6)	Nominal Structural Resistance Level - 4, P_n, kips (kN) (5) (6)
HP 10x42 (HP 250x62)	179 (796)	269 (1196)	359 (1596)	449 (1997)
HP 10x57 (HP 250x85)	243 (1080)	365 (1623)	487 (2166)	605 (2691)
HP 12x53 (HP 310x79) (7)	224 (996)	337 (1499)	449 (1997)	561 (2495)
HP 14x73 (HP 360x108) (7)	310 (1378)	465 (2068)	620 (2757)	775 (3447)
HP 14x117 (HP 360x174)	498 (2215)	748 (3327)	997 (4434)	1247 (5547)

Table notes:

(1) The designer may select H-pile sections not given in the table but shall check availability for those sections.
(2) These values were calculated from 1.45*6 ksi*A/0.6, which simplifies to 14.50*A or f_nA, (and then were converted to metric).
(3) These values were calculated from 1.45*9 ksi*A/0.6, which simplifies to 21.75*A or f_nA, (and then were converted to metric).
(4) These values were calculated from 1.45*12 ksi*A/0.6, which simplifies to 29.00*A or f_nA, (and then were converted to metric).
(5) These values were calculated from 1.45*15 ksi*A/0.6, which simplifies to 36.25*A or f_nA, (and then were converted to metric).
(6) If the Soils Design Section and Chief Structural Engineer recommend φ_c = 0.5, these tabulated values should not be increased because the intent of the lower φ_c is to increase the number of piles.
(7) Because of slender flanges these sections are not to be used for integral abutments.

Large downdrag forces at abutments with steel H-piles designed for SRL-1 often require significantly more piles or larger piles than similar abutments which do not need to be designed for downdrag. In order to mitigate the effects of downdrag on the number and/or size of steel H-piles at abutments to some

degree, the office allows designers to increase the SRL-1 nominal structural resistances in BDM Table 6.2.6.1-1 by 25%. The 25% increase applied to SRL-1 essentially creates SRL-1.5 which is halfway between SRL-1 and SRL-2. [For example, the nominal structural resistance for a typical Grade 50 HP 10x57 (HP 250x85) pile in BDM Table 6.2.6.1-1 would increase from a SRL-1 value of 243 k (1080 kN) to a SRL-1.5 value of 304 k (1352 kN).] The total factored axial compression load plus the factored downdrag load shall be less than or equal to the factored structural resistance of SRL-1.5.

In unusual cases where piles are subjected to significant moment or eccentric load or where piles extend above ground such as in a pile bent [BDM 6.6.4.2] the piles also need to be checked structurally at or near their tops. Piles subject to scour need to be checked structurally as columns below footings [BDM 6.6.4.1.3.1].

The geotechnical design to determine pile contract length shall follow the procedures in this manual [BDM 6.2.4].

In cases where piles are projected to achieve sufficient geotechnical resistance within 5 feet (1.500 m) of bedrock the designer should consider driving the piles to rock.

Steel H-piles driven to bedrock should penetrate the surface of the rock to depths recommended in Table 6.2.4.2-2.

The designer should use approved driving points [OM IM No. 468] when recommended by the Soils Design Section. Generally the section recommends driving points if H-piles must be driven through soil layers containing boulders or if H-piles must be driven to sloping bedrock surfaces. Verify the need for driving points with the Soils Design Section. If points are needed, include on the plans CADD Note E722 or E821 [BDM 13.8], whichever is appropriate.

Although the LRFD specifications require reduction of the structural resistance factor, φ_c, to 0.50 when pile points are used [AASHTO-LRFD 6.5.4.2] the factor will ordinarily not be required. Unless the Soils Design Section and Chief Structural Engineer recommend the lower resistance factor the designer shall use a structural resistance factor of 0.6. See the commentary for a discussion of the structural resistance factor [BDM C6.2.6.1].

At strength limit states, for checking uplift on a steel H-pile embedded in a concrete footing, the designer shall use a nominal bond resistance of 0.060 ksi (0.41 MPa) and $\varphi = 0.45$. At the extreme event limit state the designer shall use $\varphi = 0.75$. If bond is insufficient for the factored load the designer shall consult with the supervising Section Leader. The preferred alternative is to resize the footing, but another alternative is to anchor the pile head with positive anchorage devices such as those described in *The Steel Pile, Pile Cap Connection* [BDM 6.2.1.5]. The positive anchorage shall consist of headed anchor studs or 7/8 inch diameter threaded F1554 Grade 36 anchor rods.

For checking uplift on a steel H-pile embedded in soil, the designer shall determine the pile resistance from the LRFD soils information chart for friction [BDM Table 6.2.7-2], neglecting any soil that may be lost due to scour or other site degradation. The designer shall apply a resistance factor for the appropriate limit state from Article 6.2.9.

In the absence of special analysis the designer may assume the lateral resistances given in Table 6.2.6.1-2. The assumed resistances are intended only for the head of a fully embedded pile.

Table 6.2.6.1-2. Assumed nominal lateral resistance per embedded H-pile

Service limit state resistance (1)	Strength or extreme event limit state resistance (1)
6 kips (27 kN)	18 kips (80 kN)

Table note:

(1) The designer may add the horizontal component of the resistance of a battered pile only if there is sufficient vertical load to develop the horizontal component.

See the commentary for a discussion of lateral loads [BDM C6.2.4.5] and for lateral load examples [BDM C6.2.6.1].

6.2.6.2 Concrete-filled steel pipe

Recently concrete-filled steel pipe piles have not been economical for typical Iowa bridges and have been used only at contractor request as a substitution for steel H-piles.

Steel pipe piles shall be of material meeting ASTM A 252 Grade 2 or Grade 3 [IDOT SS 4167.01, B, OM IM 467.03], unless an exception is approved by the supervising Section Leader.

The structural design to determine the concrete-filled steel pipe pile section shall follow the AASHTO LRFD Specifications, and the geotechnical design to determine pile contract length shall follow the procedures in this manual [BDM 6.2.4]. Pipe piles should not be driven in soils with consistent N_{60}-values greater than 40.

Driving points may be needed for pipe piles in some soil conditions. The designer shall verify the need for driving points with the Soils Design Section.

6.2.6.3 Timber [AASHTO-LRFD 8.4.1.3, 8.4.4, 8.5.2.2]

Timber piles are considered feasible only in soils with N_{60}-values of 25 or less. Timber piles shall not be used in soils that contain boulders, and timber piles for support of bridge substructure components shall not be used for bearing on rock.

Timber piles for permanent foundations shall be treated and shall meet the requirements in the standard specifications [IDOT SS 4165].

A conservative structural check, calibrated to past practice for typical integral abutment [BDM 6.5.1.1.1], stub abutment, and pier piles is given below. The check works for an axial force condition at the tip of a pile, which generally is the most severe condition, assuming that the pile is end-bearing on the smallest cross section. If the pile derives some geotechnical resistance from friction the designer, with approval of the supervising Section Leader, may check other locations in the pile in order to determine the critical section and increase the computed structural resistance of the pile. (See the commentary for additional discussion [BDM C6.2.6.3], and see Track 2, Example 2 given in LRFD Pile Design Examples ~ 2016 [BDM 6.2.1.5] for a design example. Note that the example uses construction control by the Iowa DOT ENR Formula but, for state projects, the WEAP method of control is required.)

$$\Sigma\eta\gamma P + \gamma_{DD} DD \leq n\varphi P_n$$

$\Sigma\eta\gamma P$ = total factored axial load per pile or per pile group determined by usual AASHTO LRFD procedures for a strength limit state, kips

γ_{DD} = downdrag load factor = 1.0

DD = downdrag load. The load is determined from friction bearing values [BDM Table 6.2.7-2]. If there is no downdrag this term is taken as zero

n = number of piles

φ = 0.9 for compression parallel to grain [AASHTO-LRFD 8.5.2.2].

P_n = nominal pile structural resistance at the strength limit state, kips. In keeping with past practice the structural resistance shall be limited to the following maximum values unless special design is approved by the supervising Section Leader:

- 64 kips (286 kN) for piles in integral abutments,
- 64 kips (286 kN) for piles 20 to 30 feet (6.100 to 9.150 m) long, and
- 80 kips (355 kN) for piles 35 to 55 feet 10.670 to 16.760 m) long.

In unusual cases where the top of a pile extends above ground or is subjected to significant moment or eccentric load, the pile also needs to be checked structurally at or near its top.

The minimum pile length shall be 20 feet (6.100 m), and the maximum pile length shall be 55 feet (16.760 m), with intermediate lengths in 5-foot (1.500-m) increments.

To provide a pinned head condition for timber piles in integral abutments where the bridge length is 150 to 200 feet (45.700 to 61.000 m), the pile heads shall be wrapped with carpet (or rug) padding. See the commentary for details and plan note [BDM C6.2.6.3].

For large projects with 1500 feet (457 m) or more of timber piles and especially when piles tip out in soft material with N_{60}-values of 10 or less, the designer should consider requiring a test pile or a pile load test and shall discuss the issue with the supervising Section Leader. A test pile or a pile load test should be located in a relatively dry abutment or pier footing but not in a prebored hole or in a cofferdam.

Timber piles have limited overcapacity for hard driving and thus should not be used for projects that will subject piles to significant downdrag forces. The traditional driving limit by the Iowa DOT ENR Formula scales up to an LRFD target driving resistance of 160 tons, and the designer should specify that limit in CADD Note E719 or E819 as appropriate.

Timber piles should be fitted with metal driving shoes when recommended by the Soils Design Section. Figure 6.2.6.3-1 gives the driving shoe detail for timber piles less than 40 feet (12.190 m) in length, and Figure 6.2.6.3-2 gives the detail for piles 40 to 55 feet (12.190 to 16.760 m) in length.

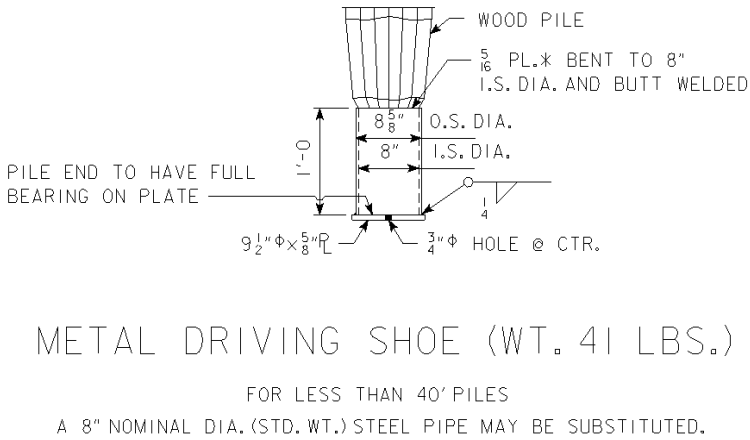

Figure 6.2.6.3-1. Metal driving shoe for timber piles less than 40 feet (12.190 m) in length

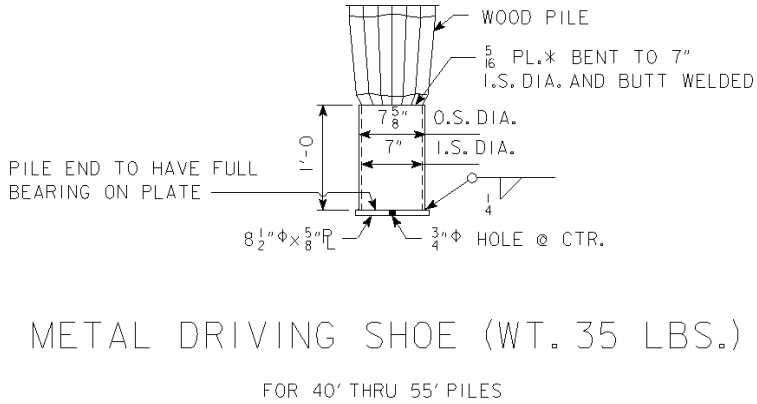

Figure 6.2.6.3-2. Metal driving shoe for timber piles 40 to 55 feet (12.190 to 16.760 m) in length

In the absence of special analysis the designer may assume the lateral resistances given in Table 6.2.6.3. The assumed resistances are intended only for the head of a fully embedded pile.

Table 6.2.6.3. Nominal assumed lateral resistance per embedded timber pile

Service limit state resistance (1)	Strength or extreme event limit state resistance (1)
4 kips (18 kN)	7 kips (31 kN)

Table notes:

(1) The designer may add the horizontal component of the resistance of a battered pile only if there is sufficient vertical load to develop the horizontal component.

6.2.6.4 Prestressed concrete

Prestressed concrete piles are feasible only in soils that permit displacement piles and soils that provide adequate geotechnical resistance through friction or a combination of friction and end bearing.

Prestressed piles have proven to be difficult to drive in very firm glacial clay and very firm sandy glacial clay, and the designer shall consult with the Soils Design Section before using prestressed piles in those soils. Prestressed concrete piles should not be driven in glacial clay with consistent N_{60}-values greater than 30 to 35. The soil layer at the tip of the pile shall have an N_{60}-value in the 25 to 35 range, with no boulders.

Prestressed concrete bearing piles shall meet the material, strength, and other requirements of the standard specifications [IDOT SS 2407].

The designer may consider 12-inch (310-mm) square prestressed concrete piles for support of piers and stub abutments but not for integral abutments [OBS SS 1046]. Prestressed concrete piles 14 or 16 inches (360 or 410 mm) square are an option for pile bents [BDM 6.6.4.2.1.2] as detailed and noted on the standard sheet for trestle pile bents [OBS SS P10L].

The structural design for 12-inch (310-mm) square piles detailed on the standard sheet [OBS SS 1046] shall follow the AASHTO LRFD Specifications. The maximum nominal structural resistance to be used in design shall be 200 kips (900 kN).

The geotechnical design to determine pile contract length and driving target shall follow the procedures in this manual [BDM 6.2.4].

The maximum length of an individual 12-inch (310 mm) foundation pile section shall be 55 feet (16.760 m). When piles longer than 55 feet (16.760 m) are required, pile splices shall be used to fasten pile sections together. Only one splice will be allowed for overall pile lengths in the 56 to 110-foot (17.070 to 33.500 m) range. Pile sections shall be welded together at the splice after the first section is driven.

Standard sheets [OBS SS 1046] require a steel splice plate on the driving end of the pile. Pile suppliers can be expected to provide 5-foot (1.525-m) and 10-foot (3.050-m) extensions for splicing a pile that does not achieve required bearing at the expected depth.

The designer shall consult with the Soils Design Section regarding the need for steel driving points.

Top portions of 12 inch (310 mm) prestressed concrete piles to be embedded in stub abutment or pier footing concrete shall be roughened, after driving, by sandblasting or other approved methods to improve bond between piles and footing [OBS SS 1046 and IDOT SS 2403.03, I].

6.2.7 Nominal geotechnical resistances

The following charts, Tables 6.2.7-1 and 6.2.7-2, give nominal, unit geotechnical resistance values for end bearing and friction bearing piles. These LRFD charts have been extrapolated from the 1994 Blue Book charts [BDM 6.2.1.5] by removing the presumed safety factor of two and by converting units from tons or pounds to the kip units used in the AASHTO LRFD Specifications. Thus most values in these LRFD charts are four times the values in the 1994 charts. The charts also were modified for written statements in the Blue Book and past office practice for timber and prestressed concrete piles.

The unit geotechnical resistance values in the Blue Book evidently were developed without adjustment for the water table. In most cases the recent LRFD statistical calibration for resistance factors covers the fluctuations in load test results that would be attributable to the water table, but that may not always be true for soil conditions at river bridges. In non-cohesive soil, groundwater can significantly reduce the effective stress and resulting nominal pile bearing resistance. This is of particular concern for a river bridge that is founded on friction piles driven in granular soil below the phreatic surface. In that case, the designer should consider performing a separate analysis that accounts for the effective overburden pressure, to verify that the estimated pile length based on the unit resistance values is reasonable.

Further discussion about effective stress methods of analysis to estimate required pile lengths is presented in *Design and Construction of Driven Pile Foundations, Volume I, FHWA NHI-05-042* [BDM

6.2.1.5]. The impact of effective stress on the nominal pile bearing resistance can be checked with the DRIVEN computer program available from FHWA. The DRIVEN Program User's Manual (Mathias and Cribbs 1998) and software Version 1.2, released in March 2001, can be downloaded from: http://www.fhwa.dot.gov/engineering/geotech/software.cfm.

Table 6.2.7-1. LRFD driven pile nominal unit geotechnical resistances for end bearing

SOIL DESCRIPTION	BLOW COUNT N_{60}-VALUE (8)		ESTIMATED NOMINAL RESISTANCE VALUES FOR END BEARING PILE IN KIPS [KSI]										
			WOOD PILE (1), (3)	STEEL "H" GRADE 50			PRESTRESSED CONCRETE (2)			STEEL PIPE (4)			
	MEAN	RANGE		10	12	14	12	14	16	10	12	14	18
Granular material													
	<15	---	(5)	(5)	(5)	(5)	(5)	(5)	(5)	(5)	(5)	(5)	(5)
Fine or medium sand	15	---	32	(5)	(5)	(5)	60	84	108	32	48	64	108
Coarse sand	20	---	44	(5)	(5)	(5)	84	116	148	44	64	88	144
Gravelly sand	21	---	44	(5)	(5)	(5)	84	116	148	44	64	88	144
	25	---	56	(5)	(5)	(5)	(7)	(7)	(7)	(7)	(7)	(7)	(7)
	---	25-50	(6)	[2-4]	[2-4]	[2-4]	(6), (7)	(6), (7)	(6), (7)	(7)	(7)	(7)	(7)
	---	50-100	(6)	[4-8]	[4-8]	[4-8]	(6)	(6)	(6)	(7)	(7)	(7)	(7)
	---	100-300	(6)	[8-16]	[8-16]	[8-16]	(6)	(6)	(6)	(7)	(7)	(7)	(7)
	---	>300	(6)	[18]	[18]	[18]	(6)	(6)	(6)	(7)	(7)	(7)	(7)
Bedrock													
	---	100-200	(6)	[12]	[12]	[12]	(6)	(6)	(6)	(7)	(7)	(7)	(7)
	---	>200	(6)	[18]	[18]	[18]	(6)	(6)	(6)	(7)	(7)	(7)	(7)
Cohesive material													
	12	10-50	16	(5)	(5)	(5)	28	40	52	16	24	32	52
	20	---	24	[1]	[1]	[1]	44	64	84	28	36	52	84
	25	---	32	[2]	[2]	[2]	60	84	108	32	48	64	108
	50	---	(6)	[4]	[4]	[4]	116 (6)	164 (6)	212 (6)	56	96	128	212
	100	---	(6)	[7]	[7]	[7]	(6)	(6)	(6)	(6)	(6)	(6)	(6)

Table notes:

(1) Wood piles shall not be driven through soils with N > 25.
(2) With prestressed concrete piles the preferred N for soil at the tip ranges from 25 to 35. Prestressed concrete piles have been proven to be difficult to drive in very firm glacial clay and very firm sandy glacial clay. Prestressed concrete piles should not be driven in glacial clay with consistent N > 30 to 35.
(3) End bearing resistance values for wood piles are based on a tip area of 72 in^2. Values shall be adjusted for a different tip area.
(4) Steel pipe piles should not be driven in soils with consistent N > 40. See the 1994 soils information chart [BDM 6.2.1.5] for end bearing when a conical driving point is used.
(5) Do not consider end bearing.
(6) Use of end bearing is not recommended for timber piles when N > 25 or for prestressed concrete piles when N > 35 or for any condition identified with this note.
(7) End bearing resistance shall be 0.0389 x "N" value [ksi].
(8) Use uncorrected N-values until N_{60}-values are available.

Table 6.2.7-2. LRFD driven pile nominal unit geotechnical resistances for friction bearing

SOIL DESCRIPTION	BLOW COUNT		ESTIMATED NOMINAL RESISTANCE VALUES FOR FRICTION PILE IN KIPS/FOOT										
	N_{60}-VALUE (5)		WOOD PILE	STEEL "H" GRADE 50			PRESTRESSED CONCRETE			STEEL PIPE			
	MEAN	RANGE		10	12	14	12	14	16	10	12	14	18
Alluvium or Loess													
Very soft silty clay	1	0 - 1	0.8	0.4	0.8	0.8	0.8	0.8	0.8	0.4	0.4	0.4	0.8
Soft silty clay	3	2 - 4	1.2	0.8	1.2	1.2	0.8	0.8	0.8	0.8	0.8	0.8	1.2
Stiff silty clay	6	4 - 8	1.6	1.2	1.6	2.0	1.2	1.6	2.0	1.2	1.2	1.6	2.0
Firm silty clay	11	7 - 15	2.4	2.0	2.4	2.8	2.4	2.8	3.2	1.6	2.0	2.4	2.8
Stiff silt	6	3 - 7	1.6	1.2	1.6	1.6	1.6	1.6	1.6	1.2	1.2	1.6	1.6
Stiff sandy silt	6	4 - 8	1.6	1.2	1.6	1.6	1.6	1.6	1.6	1.2	1.2	1.6	1.6
Stiff sandy clay	6	4 - 8	1.6	1.2	1.6	2.0	2.0	2.0	2.4	1.2	1.6	1.6	2.0
Silty sand	8	3 - 13	1.2	1.2	1.2	1.6	1.6	1.6	1.6	0.8	0.8	1.2	1.6
Clayey sand	13	6 - 20	2.0	1.6	2.0	2.8	2.4	2.4	2.8	1.6	2.0	2.4	2.8
Fine sand	15	8 - 22	2.4	2.0	2.4	2.8	2.4	2.8	3.2	1.6	2.0	2.4	2.8
Coarse sand	20	12 - 28	3.2	2.8	3.2	3.6	3.2	3.6	4.0	2.0	2.4	2.8	3.6
Gravely sand	21	11 - 31	3.2	2.8	3.2	3.6	3.6	3.6	4.0	2.0	2.4	2.8	3.6
Granular material	> 40	---	(2)	4.0	4.8	5.6	(2)	(2)	(2)	(2)	(2)	(2)	(2)
Glacial Clay													
Firm silty glacial clay	11	7 - 15	2.8	2.4	2.8	3.2	2.8	3.2	3.6	2.0	2.4	2.4	3.2
Firm clay (gumbotil)	12	9 - 15	2.8	2.4	2.8	3.2	2.8	3.2	3.6	2.0	2.4	2.4	3.2
Firm glacial clay(1)	11	7 - 15	2.4 [3.2]	2.8 [3.2]	3.2 [4.0]	3.6 [4.4]	3.2 [4.0]	3.6 [4.4]	4.0 [4.8]	2.0 [2.4]	2.4 [2.8]	2.8 [3.2]	3.6 [4.4]
Firm sandy glacial clay(1)	13	9 - 15	2.4 [3.2]	2.8 [3.2]	3.2 [4.0]	3.6 [4.4]	3.2 [4.0]	3.6 [4.4]	4.0 [4.8]	2.0 [2.4]	2.4 [2.8]	2.8 [3.2]	3.6 [4.4]
Firm - very firm glacial clay(1)	14	11 - 17	2.8 [3.6]	2.8 [4.0]	3.2 [4.8]	3.6 [5.6]	4.0 [4.8]	4.4 [5.2]	4.8 [5.6]	2.4 [3.2]	2.8 [3.6]	3.2 [4.0]	4.0 [5.2]
Very firm glacial clay(1)	24	17 - 30	2.8 [3.6]	2.8 [4.0]	3.2 [4.8]	3.6 [5.6]	3.2 (3) [4.8]	3.6 (3) [5.6]	4.4 (3) [6.4]	2.4 [3.2]	2.8 [3.6]	3.2 [4.0]	4.0 [5.2]
Very firm sandy glacial clay(1)	25	15 - 30	3.2 [4.0]	2.8 [4.0]	3.2 [4.8]	3.6 [5.6]	3.2 (3) [4.8]	3.6 (3) [5.6]	4.4 (3) [6.4]	2.4 [3.2]	2.8 [3.6]	3.2 [4.0]	4.0 [5.2]
Cohesive or glacial material(1)	> 35	---	(2)	2.8 [4.0]	3.2 [4.8]	3.6 [5.6]	(2)	(2)	(2)	2.0 (4) [3.2]	2.4 (4) [4.0]	2.8 (4) [4.4]	3.6 (4) [5.6]

Table notes:

(1) For double entries the upper value is for an embedded pile within 30 feet of the natural ground elevation, and the lower value [ ] is for pile depths more than 30 feet below the natural ground elevation.

(2) Do not consider use of this pile type for this soil condition, wood with N > 25, prestressed concrete with N > 35, or steel pipe with N > 40.

(3) Prestressed concrete piles have proven to be difficult to drive in these soils. Prestressed piles should not be driven in glacial clay with consistent N > 30 to 35.

(4) Steel pipe piles should not be driven in soils with consistent N > 40.

(5) Use uncorrected N-values until N_{60}-values are available.

6.2.8 Soil categories

Geotechnical resistance factors [BDM 6.2.9] for design (contract length) and for construction (target driving resistance) were statistically calibrated by Iowa State University researchers for three generalized soil categories based on a 70% rule. Therefore the designer will need to use these same categories when selecting geotechnical resistance factors for design:

- Cohesive: Along the pile length in contact with soil, 70% or more of the length is through soils classified as cohesive according to Table 6.2.8.
- Mixed: Along the pile length in contact with soil, 31% to 69% of the length is through soils classified as cohesive according to Table 6.2.8 (or 31% to 69% of the length is through soils classified as non-cohesive according to Table 6.2.8).
- Non-Cohesive: Along the pile length in contact with soil, 70% or more of the length is through soils classified as non-cohesive according to Table 6.2.8.

Table 6.2.8. Soil category based on soil classification

Generalized Soil Category	Soil Classification Method			
	AASHTO	USDA Textural	Friction Pile Charts BDM Table 6.2.7-2	
Cohesive	A-4, A-5, A-6 and A-7	Clay Silty clay Silty clay loam Silt Clay loam Silt loam Loam Sandy clay	Loess	Very soft silty clay
				Soft silty clay
				Stiff silty clay
				Firm silty clay
				Stiff silt
				Stiff sandy clay
			Glacial Clay	Firm silty glacial clay
				Firm clay (gumbotil)
				Firm glacial clay
				Firm sandy glacial clay
				Firm-very firm glacial clay
				Very firm glacial clay
				Very firm sandy glacial clay
				Cohesive or glacial material
Non-Cohesive	A-1, A-2 and A-3	Sandy clay loam Sandy loam Loamy sand Sand	Alluvium Or Loess	Stiff sandy silt
				Silty sand
				Clayey sand
				Fine sand
				Coarse sand
				Gravely sand
				Granular material (N>40)

The generalized soil category is dependent only on the soil considered to be in contact with the side of a pile for friction bearing, downdrag, or tension and is not affected by the soil in contact with the tip for end bearing. In some cases, for different design and construction conditions, different lengths of pile will need to be considered. For example, for determining the contract length for a pile affected by scour, only the pile length below design scour would be considered for friction bearing and contract length; whereas, for construction control and driving, the pile length in soil above and below design scour would be considered when determining soil category.

Therefore, the generalized soil category can change depending on which condition the designer is considering. Any of the following factors can affect the pile length assumed to be in contact with soil: excavation or preboring before driving, downdrag, scour, driving refusal at partial pile length, and pile extension. Site soil layering in combination with pile length in contact with soil may cause some unexpected changes in generalized soil category, and the designer should check multiple possible conditions and apply judgment.

6.2.9 Resistance factors

The designer needs to consider a driven pile at service, strength, and extreme event limit states, and the designer will need resistance factors for design conditions within those limit states. For typical projects the three most important considerations are at the strength limit state: structural resistance, geotechnical resistance, and target driving resistance.

For structural resistance factors at the strength limit state the office requires that the designer use the factors given in the AASHTO LRFD Specifications for the appropriate pile material and design condition.

Iowa State University researchers developed geotechnical and target driving resistance factors from static load tests by statistical calibration, with adjustments based on engineering judgment. The office also filled in gaps in the resistance factors based on experience. Use the resistance factors in Tables 6.2.9-1, 6.2.9-2, and 6.2.9-3 for timber, steel H, prestressed concrete, and steel pipe piles, <u>but</u> use the reductions for target driving resistance of timber piles given in the notes for Table 6.2.9-3.

For end bearing on rock at the strength limit state the designer shall use a resistance factor of 0.70. For friction and end bearing in soil at the strength limit state the designer shall use the resistance factors in the following two tables. The first table, Table 6.2.9-1, gives the factors for piles in axial compression.

Table 6.2.9-1. Geotechnical resistance factors (φ) for friction and end resistance at the strength limit state for a single pile in a redundant pile group

Theoretical Analysis (1)	Construction Control (Field Verification) (2)					Axial Compression Resistance Factor for Design (3)				
	Driving Criteria Basis		PDA/ CAPWAP	Planned Retap Test 3-Days After EOD	Static Pile Load Test	Cohesive			Mixed	Non-Cohesive
	Iowa DOT ENR Formula	WEAP				φ	φ_{EOD}	φ_{SETUP}	φ	φ
Iowa Blue Book	Yes					0.60			0.60	0.50
		Yes (4)				0.65			0.65	0.55
		Yes (4)	Yes			0.70 (5)			0.70	0.60
		Yes (4)	Yes	Yes		0.80			0.70	0.60
		Yes (4)			Yes	0.80			0.80	0.80

Table notes:

(1) Use BDM Table 6.2.7-2 to estimate the theoretical nominal pile resistance for friction bearing. If soil or rock at the pile tip is capable of end bearing, estimate the theoretical end resistance from BDM Table 6.2.7-1. Resistance factors in this table apply for end bearing in soil; the resistance factor for end bearing in rock is 0.70.
(2) Use the construction control that will be specified on the plans. Except in unusual cases the construction control for state projects will be WEAP.
(3) These resistance factors are for redundant pile groups, which the office defines as five piles minimum except four piles minimum for abutments.
(4) Use the Blue Book soil input procedure to complete WEAP analyses.
(5) Setup effect has been included when WEAP is used to establish driving criteria <u>and</u> CAPWAP is used as a construction control.

The second table, Table 6.2.9-2, gives the resistance factors for friction resistance for piles in axial tension. The factors for tension are 0.75 of the factors for compression in the first table, rounded to the nearest 0.05.

Table 6.2.9-2. Geotechnical resistance factors (φ_{UP}) for friction resistance under axial tension at the strength limit state for a single pile in a redundant pile group

Theoretical Analysis (1)	Construction Control (Field Verification) (2)					Axial Tension Resistance Factor for Design (3)				
	Driving Criteria Basis		PDA/ CAPWAP	Planned Retap Test 3-Days After EOD	Static Pile Load Test	Cohesive			Mixed	Non-Cohesive
	Iowa DOT ENR Formula	WEAP				φ	φ_{EOD}	φ_{SETUP}	φ	φ
Iowa Blue Book	Yes					0.45			0.45	0.40
		Yes (4)				0.50			0.50	0.40
		Yes (4)	Yes			0.55 (5)			0.55	0.45
		Yes (4)	Yes	Yes		0.60			0.55	0.45
		Yes (4)			Yes	0.80			0.80	0.80

Table notes:

(1) Use BDM Table 6.2.7-2 to estimate the theoretical nominal pile resistance for friction bearing.
(2) Use the construction control that will be specified on the plans. Except in unusual cases the construction control for state projects will be WEAP.
(3) These resistance factors are for redundant pile groups, which the office defines as five piles minimum except four piles minimum for abutments.
(4) Use the Blue Book soil input procedure to complete WEAP analyses.
(5) Setup effect has been included when WEAP is used to establish driving criteria <u>and</u> CAPWAP is used as a construction control.

For lateral load on a single pile or a pile group at the strength limit state the designer shall use a resistance factor of 1.0 [AASHTO-LRFD Table 10.5.5.2.3-1].

The designer shall use the following table, Table 6.2.9-3, for target driving resistance factors at the strength limit state. For end bearing on rock at the strength limit state the designer shall use a driving resistance factor of 0.70.

Table 6.2.9-3. Target driving resistance factors (φ_{TAR}) at the strength limit state for a single pile in a redundant pile group

Theoretical Analysis (1)	Construction Control (Field Verification) (2)					Driving Resistance Factor for Construction				
	Driving Criteria Basis		PDA/ CAPWAP	Planned Retap Test 3-Days After EOD	Static Pile Load Test	Cohesive			Mixed	Non-Cohesive
	Iowa DOT ENR Formula	WEAP				φ	φ_{EOD}	φ_{SETUP}	φ	φ
Iowa Blue Book	Yes					0.55 (6)			0.55 (6)	0.50 (6)
		Yes (4)					0.65 (7)	0.20 (7)	0.65 (7)	0.55 (7)
		Yes (4)		Yes		0.70			0.65	0.55
		Yes (4)	Yes (5)				0.75	0.40	0.70	0.70
		Yes (4)	Yes (5)	Yes		0.80			0.70	0.70
		Yes (4)			Yes	0.80			0.80	0.80

Table notes:

(1) Use BDM Table 6.2.7-2 to estimate the theoretical nominal pile resistance for friction bearing.
(2) Use the construction control specified on the plans. Except in unusual cases the construction control for state projects will be WEAP.
(3) These resistance factors are for redundant pile groups, which the office defines as five piles minimum except four piles minimum for abutments.
(4) Use the Blue Book soil input procedure to complete WEAP analyses.
(5) Use signal matching to determine nominal driving resistance.
(6) Based on historic timber pile test data, reduce the resistance factor to 0.35 for redundant groups of timber pile if the Iowa DOT ENR formula (modified for LRFD) is used for construction control.
(7) For redundant groups of timber pile, reduce the resistance factor to 0.40 without increase for setup if WEAP is used for construction control.

The resistance factors for the strength limit state account for resistance gain due to pile setup for friction piles driven in cohesive soil; and the resistance factors neglect pile setup for friction piles driven in non-cohesive and mixed soil types. Calibration of the resistance factors was based on the target nominal resistance that is achieved at seven days after EOD. To accommodate Iowa DOT construction practice, it was assumed that planned retap tests for construction control would be completed three days after EOD.

The designer shall take resistance factors for the service limit state as 1.0, except as provided for overall stability in the AASHTO LRFD Specifications [AASHTO-LRFD 11.6.2.3].

The designer shall take resistance factors at the extreme event limit state as 1.0 [AASHTO-LRFD 10.5.5.3], except that for uplift resistance of piles the designer shall use a resistance factor of 0.75.

6.2.10 Cohesive soil setup

For H-piles driven in cohesive soil, the setup chart in Figure 6.2.10 provides a means for estimating the increase in pile driving resistance due to setup after EOD with WEAP construction control. The chart shall not be used with Iowa DOT ENR Formula control and shall not be used with timber, prestressed concrete, or concrete-filled pipe piles.

The average SPT N_{60}-value (N_a) to use with the chart is determined as follows:

$$N_a = \frac{\sum_{i=1}^{n} N_i l_i}{\sum_{i=1}^{n} l_i}$$

Where:

N = N_{60}-value for soil layer
l = thickness of soil layer

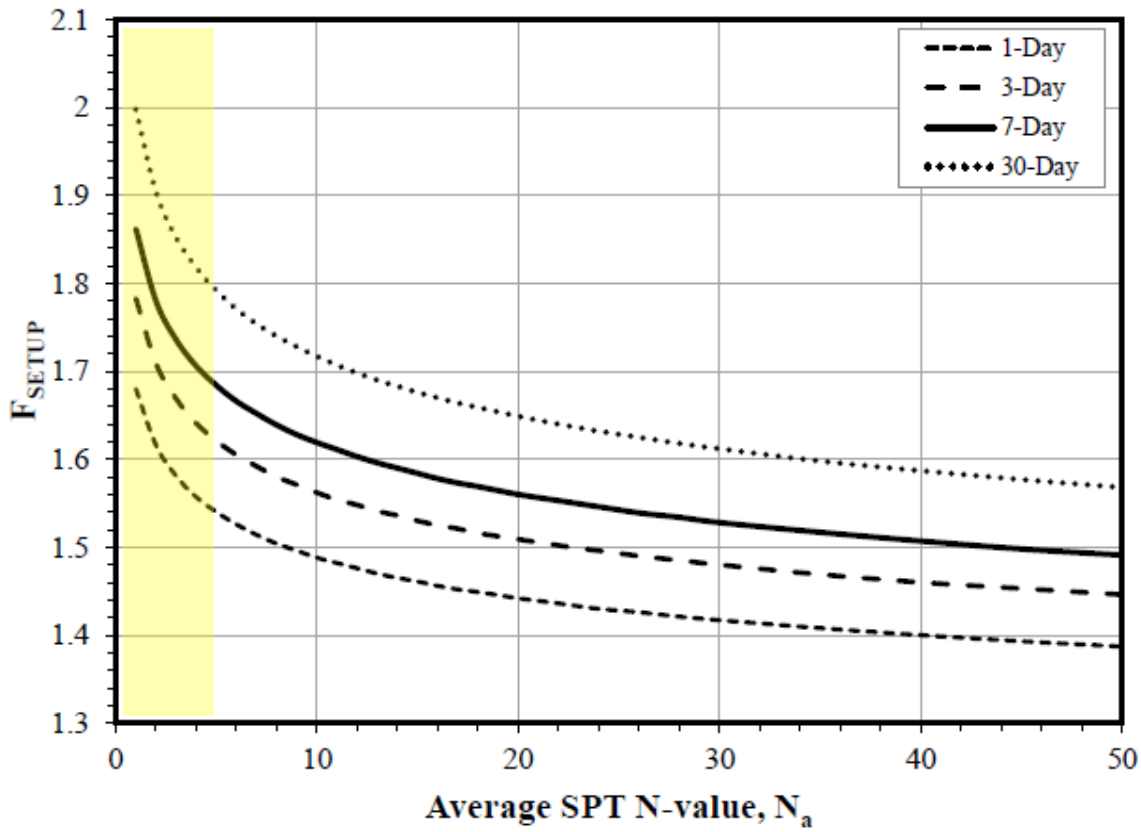

Figure 6.2.10. Setup factor chart for WEAP construction control

The designer should use the setup chart with caution for a soft clay layer with an SPT N_{60}-value less than 5 (the shaded region on the chart) or with an undrained shear strength (S_u) less than 1.04 ksf (50 kPa).

Pile setup has been observed above and below the water table as reported in *Development of LRFD Procedures for Bridge Pile Foundations in Iowa – Volume II: Field Testing of Steel H-Piles in Clay, Sand, and Mixed Soils and Data Analysis* [BDM 6.2.1.5]. At this time, no special treatment of the water table is suggested for pile design in cohesive soils.