TABLE OF CONTENTS ~ STEEL GIRDERS AND BEAMS

5.5 Steel Girders and Beams
- 5.5.1 CWPG standard
- 5.5.2 CWPG LRFD
  - 5.5.2.1 General
    - 5.5.2.1.1 Policy overview
    - 5.5.2.1.2 Design information
    - 5.5.2.1.3 Definitions
    - 5.5.2.1.4 Abbreviations and notation
    - 5.5.2.1.5 References
  - 5.5.2.2 Loads
    - 5.5.2.2.1 Dead
    - 5.5.2.2.2 Live
    - 5.5.2.2.3 Fatigue
    - 5.5.2.2.4 Dynamic load allowance
    - 5.5.2.2.5 Earthquake
    - 5.5.2.2.6 Construction
  - 5.5.2.3 Load application to superstructure
    - 5.5.2.3.1 Load modifier
    - 5.5.2.3.2 Limit states
  - 5.5.2.4 Plate girders
    - 5.5.2.4.1 Analysis and design
      - 5.5.2.4.1.1 Analysis assumptions
      - 5.5.2.4.1.2 Materials
      - 5.5.2.4.1.3 Design resistance
      - 5.5.2.4.1.4 Section properties
      - 5.5.2.4.1.5 Moment
      - 5.5.2.4.1.6 Flanges
      - 5.5.2.4.1.7 Lateral bracing
      - 5.5.2.4.1.8 Shear connectors
      - 5.5.2.4.1.9 Shear
      - 5.5.2.4.1.10 Web
      - 5.5.2.4.1.11 Stiffeners
      - 5.5.2.4.1.12 Deflection and camber
      - 5.5.2.4.1.13 Welded connections
      - 5.5.2.4.1.14 Bolted connections
      - 5.5.2.4.1.15 Fatigue
      - 5.5.2.4.1.16 Diaphragms and cross frames
      - 5.5.2.4.1.17 Horizontally curved superstructures
      - 5.5.2.4.1.18 Additional considerations
    - 5.5.2.4.2 Detailing
    - 5.5.2.4.3 Shop drawings
    - 5.5.2.4.4 Fracture critical members

5.5 Steel Girders and Beams

This article now covers only the CWPG LRFD superstructure type [BDM 5.5.2]. The transition to the AASHTO LRFD Specifications is complete, and the AASHTO Standard Specifications article [BDM 5.5.1] has been withdrawn. The continuous welded plate girder (CWPG) type is designed for projects that require features not available with reinforced or prestressed concrete structures.

For typical stream crossings the office has developed signed standard plans for weathering steel, three-span rolled beam bridges that meet the AASHTO LRFD Specifications. More information is given in the Preliminary section [BDM 3.2.6.1.5].

5.5.1 CWPG standard

Withdrawn and archived.

5.5.2 CWPG LRFD

5.5.2.1 General [AASHTO-LRFD Section 6]

The design procedures described in this article meet AASHTO LRFD Specifications, Fourth Edition [AASHTO-LRFD Section 6], with minor modifications. The designer also should review related manual articles for decks [BDM 5.2], deck drains [BDM 5.8.4], railings [BDM 5.8.1], haunches [BDM 5.3], and bearings [BDM 5.7]. At this time not all of the related articles have been updated to the AASHTO LRFD Specifications.

5.5.2.1.1 Policy overview [AASHTO-LRFD 2.5.2.7, 6.7.4.1]

For bridges that require longer spans, shallower superstructures, or sharper horizontal curves than those available with pretensioned prestressed concrete beams (PPCBs), the office usually selects weathering steel, continuous welded plate girder (CWPG) superstructures. All CWPG superstructures and substructures are to be designed by LRFD with HL-93 loading.

The office does not have standard girder cross sections and therefore custom designs girders for each project. Because of continuity, span lengths generally are balanced to avoid uplift and other undesirable conditions. To avoid significant imbalance the office prefers that an end span be at least 60% of the length of the adjacent interior span.

Typical CWPG superstructures are designed with four or five plate girders and cross frame or K-frame diaphragms. For standard roadway widths, plate girders are spaced 8.25 feet (2.400 m) to 10.25 feet (3.000 m) apart as shown on standard sheets [OBS SS 4305-4310]. Larger girder spacings up to 12 feet (3.660 m) are considered on a case-by-case basis. Both field-assembled cross frames on the standard sheets and alternate shop-assembled cross frames [OBS SS 4305A] are to be included in a typical plan set.

Although the AASHTO LRFD Specifications no longer limit diaphragm spacing [AASHTO-LRFD 6.7.4.1], the office prefers that the permanent diaphragm spacing not exceed the previous AASHTO Standard Specifications maximum of 25 feet (7.620 m). Regardless of spacing the designer will need to evaluate the need for diaphragms at all stages of construction and at the final condition.

For economy and ease of fabrication, exterior and interior girders should use the same plate sizes. For future widening the exterior girder is required to have at least the same capacity as an interior girder [AASHTO-LRFD 2.5.2.7] and, for typical bridges, the office prefers that the exterior and interior girders be the same. However, for major bridges there may be significant savings if interior girders and exterior girders are optimized individually. If it appears that there would be significant savings with different interior and exterior girder designs the designer shall consult with the supervising Section Leader.

Under the AASHTO Standard Specifications, with typical Iowa deck overhangs there was a greater load distribution to the interior girder than to the exterior girder, and thus the interior girder typically controlled the design. The AASHTO LRFD Specifications employ new load distribution factors considering a number of parameters, and there are separate distribution factors for flexure and shear in exterior and interior girders. Typically the exterior girder will control flexural and fatigue design while the interior girder will control shear design.

Girders typically are field spliced at approximate interior girder inflection points for dead load of structural components, nonstructural attachments, wearing surface, and utilities (DC1, DC2, and DW). However, for long span girders it may be more appropriate to locate field splices based on shipping length and weight.

In negative moment regions top and bottom flanges are made the same size, but the flanges may be spliced and made thicker in the regions closest to piers. The designer is required to check the option of using the thicker flange plates throughout the negative moment region and to show the better design choice on the plans.

Because each stiffener has a significant cost, the office recommends using partially stiffened girder webs to minimize the number of intermediate stiffeners, but the designer should consider economics carefully. In some situations there may be an advantage to an unstiffened or a fully stiffened web. In any situation the intermediate stiffener layout should be planned so that stiffeners also can serve as connectors for diaphragms or cross frames.

Continuous welded plate girder superstructures are more flexible under live load than typical concrete superstructures. To avoid serviceability problems the designer should check deflection early in the design process.

The office prefers that straight and curved CWPG superstructures be detailed by the fabricator for a steel dead load fit (SDLF). A no-load fit (NLF) is recommended for horizontally curved bridges with arc span lengths (L) exceeding 300’ (91.5 m) at the bridge centerline and where L/R is greater than 0.1 where R is the radius at the bridge centerline.

Unless otherwise noted, the provisions of this article are intended to apply to straight bridges. Curved bridges involve design conditions that require special consideration [BDM 5.5.2.4.1.17].

5.5.2.1.2 Design information

In the office, the designer receives the preliminary design with the selection of the continuous welded plate girder superstructure type and locations of substructure components to fit site conditions. The designer should check any preliminary design (or type, size, and location, commonly called the TS&L) with a short span adjacent to a long span, and request substructure layout changes if the layout causes significant problems in the superstructure design.

Bridge cross sections for standard roadway widths and alternate, shop-assembled cross frames are given on standard sheets [OBS SS 4305-4310, 4305A]. Typical intermediate stiffener, intermediate diaphragm stiffener, and bearing stiffener details also are given on the standard sheet [OBS SS 1021]. If possible, the designer should use the latest versions of these standard sheets when preparing the design for a CWPG bridge.

For specification, material, or construction information beyond the information in this manual, the designer should consult the following sources. The publications are available from the offices listed and also are available on the Iowa Department of Transportation web site (http://www.dot.state.ia.us).

- Office of Specifications, *Standard Specifications for Highway and Bridge Construction, Series 2001*, Articles 2408, 4152, and 4182.
- Office of Materials, Instructional Memoranda 453.10 and 561-565
- Office of Construction, *Construction Manual* and *New Bridge Construction Handbook*

5.5.2.1.3 Definitions [AASHTO-LRFD 3.3.2]

Section Leader is the supervisor of the Office of Bridges and Structures preliminary bridge section, final design section, or consultant coordination section.

Tension control bolt has a splined end beyond the thread. The end will shear off at a calibrated pretension when installed with a special wrench. The office permits use of the bolts for connections completed in the shop but not for field connections [BDM 5.5.2.4.1.14].

5.5.2.1.4 Abbreviations and notation [AASHTO-LRFD 3.3.2, 3.10.4.2]

ADTT, average daily truck traffic in one direction
CVN, Charpy V-notch
CWPG, continuous welded plate girder
DC1, non-composite dead load of structural components and nonstructural attachments such as girders, deck, haunches, diaphragms, and cross frames [AASHTO-LRFD 3.3.2].
DC2, composite dead load of structural components and nonstructural attachments such as railings and sidewalks, curbs, and medians that are not part of the initial deck pour [AASHTO-LRFD 3.3.2].
DW, dead load of wearing surfaces and utilities [AASHTO-LRFD 3.3.2].
FCM, fracture critical member
K, effective length factor
LRFD, load and resistance factor design
OSHA, Occupational Safety and Health Administration
PPCB, pretensioned prestressed concrete beam
S_{D1}, horizontal response spectral acceleration coefficient at 1.0-sec. period modified by long-period site factor [AASHTO-LRFD 3.10.4.2]
TS&L, type, size, and location
VPD, vehicles per day, which includes traffic in both directions

5.5.2.1.5 References

AASHTO/NSBA Steel Bridge Collaboration. *Guidelines for Design for Constructibility, G 12.1-2003*. Chicago: AASHTO/NSBA Steel Bridge Collaboration, 2003.

American Association of State Highway and Transportation Officials (AASHTO). *AASHTO Guide Specifications for Horizontally Curved Highway Bridges.* Washington: AASHTO, 2003.

American Institute of Steel Construction (AISC). *Manual of Steel Construction, Allowable Stress Design, Ninth Edition.* Chicago: AISC, 1989. (This manual has correct information for weights of non-high-strength bolts.)

American Institute of Steel Construction (AISC). *Steel Construction Manual, Thirteenth Edition.* Chicago: AISC, 2005.

American Society for Testing and Materials (ASTM). “A780-01, Standard Practice for Repair of Damaged and Uncoated Areas of Hot-Dip Galvanized Coatings.” West Conshohocken: ASTM, 2002.

American Welding Society (AWS). *Bridge Welding Code, AWS D1.5M/D1.5:1995.* Miami: AWS, 1995.

Federal Highway Administration (FHWA). *Uncoated Weathering Steel in Structures, Technical Advisory T 5140.22.* Washington: FHWA, 1989.

Hartle, R.A., K.E. Wilson, W.A. Amrhein, S.D. Zang, J.W. Bouscher, and L.E. Volle. *LRFD Design Example for Steel Girder Bridge with Commentary.* Arlington: National Highway Institute, Federal Highway Administration, 2003.

HDR Inc. *LRFD Design Example, Steel Beam Bridge Design*. Omaha: HDR Inc., 2004.

Johnston, Bruce G., Editor. *Guide to Stability Design Criteria for Metal Structures, Third Edition.* New York: John Wiley and Sons, 1976. (Also, see later editions edited by Theodore V. Galambos.)

Knight, Richard P., “Economical Steel Plate Girder Bridges,” *Engineering Journal, AISC*, Vol. 21, No. 2, 1984, pp 89-93.

Lundquist, William A. *Iowa DOT Bridge Design Office Metric Handbook.* Ames: Office of Bridges and Structures, 1994 updated through 1996.

National Steel Bridge Alliance (NSBA). *Steel Bridge Design Handbook.* Chicago: NSBA, 2006-2007 (Available on the Internet at http://www.steelbridges.org/pages/designhandbook.html Note that html is required in the URL; htm is not an acceptable substitute.)

National Steel Bridge Alliance (NSBA). *Skewed and Curved Steel I-Girder Bridge Fit.* Fit Task Force, NSBA Technical Subcommittee, 2014 (Available on the Internet at https://www.aisc.org/WorkArea/showcontent.aspx?id=38766 or http://www.steelbridges.org/WorkArea/showcontent.aspx?id=38766)

Office of Construction. *Construction Manual.* Ames: Office of Construction, Iowa Department of Transportation, 2006. (Available on the Internet at: http://www.iowadot.gov/erl/current/CM/Navigation/nav.pdf)

5.5.2.2 Loads

There are many loads applied to the superstructure and transmitted to the substructure. The articles that follow discuss the typical loads that affect the design of the superstructure, but the designer shall consider the full range of loads. The designer should consult the pier article [BDM 6.6] for a more complete discussion of loads.

5.5.2.2.1 Dead

The office classifies dead load as follows.

- DC1 is noncomposite dead load including girders, deck, haunches, diaphragms, and cross frames.
- DC2 is composite dead load including railings and sidewalks, curbs, and medians that are not part of the initial deck pour.
- DW is composite dead load of wearing surfaces and utilities.

The deck weight that is part of DC1 shall be distributed to each girder assuming the slab between girders is simply supported and all of the deck weight of an overhang is distributed to the exterior girder.

For a typical CWPG bridge the office requires a future wearing surface load of 0.020 ksf (960 Pa), which is part of the DW load.

For two course decks the designer shall consider the second course as DC2 load because it will be placed under relatively controlled conditions by the bridge contractor.

For superstructures with roadway widths no greater than 44 feet (13.200 m), DC2 and DW shall be distributed equally to all girders.

For superstructures with roadway widths greater than 44 feet (13.200 m), the future wearing surface shall be distributed equally to all girders. Each railing and raised sidewalk cast after the deck along the edge of the superstructure shall be distributed one-half to the exterior girder, one-quarter to the first interior girder, and one-quarter to the second interior girder.

5.5.2.2.2 Live [AASHTO-LRFD 3.6.1.2, C3.6.1.2.1, 3.6.1.3, C3.6.1.3.1, 3.6.1.6, 4.6.2.2]

Unless special requirements govern the design, vehicular live load (LL) for CWPG superstructures shall be HL-93 [AASHTO-LRFD 3.6.1.2]. It shall be applied as discussed in the AASHTO LRFD Specifications [AASHTO-LRFD 3.6.1.3].

In unusual situations identified by the Chief Structural Engineer, where a bridge will experience a high percentage of truck traffic, accumulation of trucks due to traffic flow control, or special industrial loads, the designer will need to consider additional loading as discussed in the AASHTO LRFD Specifications

commentary [AASHTO-LRFD C3.6.1.2.1, C3.6.1.3.1]. In these situations the designer shall consult with the Chief Structural Engineer.

Sidewalk and other live loads shall be added to the superstructure live load when applicable. A pedestrian load (PL) of 0.075 ksf (3.60 kPa) shall be applied to all sidewalks wider than 2.0 feet (610 mm) [AASHTO-LRFD 3.6.1.6] and considered simultaneously with the vehicular live loads.

Distribution of live load to interior and exterior girders shall be as given in the AASHTO LRFD Specifications [AASHTO-LRFD 4.6.2.2]. For skewed bridges the designer shall use the shear increase [AASHTO-LRFD 4.6.2.2.3c] but not the moment reduction [AASHTO-LRFD 4.6.2.2.2e].

5.5.2.2.3 Fatigue [AASHTO-LRFD 3.6.1.4]

The fatigue load shall be taken according to the AASHTO LRFD Specifications [AASHTO-LRFD 3.6.1.4].

If the bridge will carry mainline Interstate traffic, consult with the Chief Structural Engineer regarding the need to design for infinite fatigue life. Otherwise, determine the ADTT as outlined below.

The Office of Systems Planning determines the traffic estimates on the type, size, and location plan (TS&L) that becomes the situation plan in a set of bridge drawings. The traffic estimates always are for the number of vehicles traveling in both directions, even if the highway is divided. Therefore the designer shall determine the frequency of the fatigue load as follows:

(1) Using information on the situation plan for the bridge, multiply the future estimated vehicles per day (VPD) by the % Trucks/100 to determine the average daily truck traffic (ADTT) in both directions.
(2) Multiply the ADTT from (1) by 0.6 to estimate the ADTT in one direction.
(3) Adjust the ADTT to a single lane with the appropriate value given in the AASHTO LRFD Specifications [AASHTO-LRFD 3.6.1.4.2].

5.5.2.2.4 Dynamic load allowance [AASHTO-LRFD 3.6.2.1]

The static effects of the design truck or tandem, other than centrifugal and braking forces, shall be amplified by the dynamic load allowance (IM) given in the AASHTO LRFD Specifications [AASHTO-LRFD 3.6.2.1].

5.5.2.2.5 Earthquake [AASHTO-LRFD 3.10.3.1, 3.10.4.2, 3.10.6, 3.10.9.2, 4.7.4.1, 4.7.4.4]

Based on the acceleration coefficient S_{D1}, all of Iowa with Site Class A through E shall be classified as Seismic Zone 1 [AASHTO-LRFD 3.10.3.1, 3.10.4.2, 3.10.6]. Thus for typical bridges no seismic loading (EQ) or analysis is required [AASHTO-LRFD 4.7.4.1]. However, for unusual projects such as bridge sites determined to be Site Class F and for Missouri River and Mississippi River bridges the designer shall determine the seismic zone and perform seismic analysis as required by the AASHTO LRFD Specifications.

Typical CWPG bridges with integral abutments, standard fixed pier connections, and/or standard steel reinforced elastomeric bearings do not require design for seismic connection forces. However, the designer should review bridges with deck expansion joints, bronze plate bearings, fixed shoe bearings, rocker bearings, and special bearings for the need to design for seismic connection forces [AASHTO-LRFD 3.10.9.2 and BDM 5.7.2.6]. At deck expansion joints there also will be a need to check bearing seat widths [AASHTO-LRFD 4.7.4.4].

5.5.2.2.6 Construction [AASHTO-LRFD 6.10.3]

Under the constructibility provisions of the AASHTO LRFD Specifications [AASHTO-LRFD 6.10.3] the designer will need to check the girders for several limit states during construction. In addition to the DC1 loads listed in BDM 5.5.2.2.1 Tthe office requires the designer to use the following loads.

- Dead load of forms: 0.010 ksf (480 Pa)

- Dead load of edge rail and walkway applied at the edge of the deck form: 0.075 klf (1100 N/m)
- Construction live load: 0.050 ksf (2400 Pa) [IDOT SS 2403.03, L, 4, d.]
- Live load of finishing machine located along the edge of the deck form to maximize the design condition: 6 kips (26.690 kN)
- Wind load for 100 mph (161 kph) wind at elevations not exceeding 30 feet (9.140 m) above ground level: 0.050 ksf (2400 Pa). At higher elevations the load shall be adjusted upward.

The designer shall consider the deck pouring sequence in the design of the girders for constructability.

Typically during construction the exterior girder supports the deck overhang by means of an overhang bracket [OBS SS 4305A]. The bracket transfers to the exterior girder both vertical and lateral loads that are dependent on the bracket shape. The designer shall consider these construction loads to the exterior girder.

For most bridge projects it is assumed that construction can take place without cranes, construction vehicles, construction equipment, and concentrated quantities of construction materials on the bridge in addition to the loads listed above. If, however, the contractor does need to place additional loads on the bridge larger than those permitted by the Standard Specifications [IDOT SS 1105.12, D], the contractor will be required to submit structural analysis by an Iowa-licensed engineer for approval. Thus the bridge designer may be required to review construction loading after letting of the bridge contract.

5.5.2.3 Load application to superstructure

5.5.2.3.1 Load modifier [AASHTO-LRFD 1.3.2, 3.4.1]

Load factors shall be adjusted by the load modifier, which accounts for ductility, redundancy, and operational importance [AASHTO-LRFD 1.3.2, 3.4.1]. For typical CWPG bridges with at least three parallel girders the load modifier shall be taken as 1.0.

5.5.2.3.2 Limit states [AASHTO-LRFD 2.5.2.6.2, 2.5.3, 3.4.1, 3.4.2]

For the typical CWPG bridge superstructure, the designer shall consider the following limit states for the completed bridge [AASHTO-LRFD 3.4.1].

- Strength I, superstructure with vehicles but without wind
- Extreme Event II, collision by vehicle (railing)
- Service I, live load deflection
- Service II, control of permanent deformations and slip control in slip critical connections for live load
- Fatigue

Usually Strength III (superstructure without vehicles but with wind exceeding 55 mph (89 kph)), Strength IV (superstructure with very high dead load to live load ratios), and Strength V (superstructure with vehicles and with wind at 55 mph (89 kph)) will not control for the typical completed bridge, and the designer may use experience with typical CWPG bridges to avoid detailed checking of these three limit states. For long span and other non-typical bridges the designer shall fully consider all appropriate limit states.

The designer also shall consider the following limit states during construction.

- Strength I, structure with construction dead load and live load
- Strength III, structure with construction dead load and wind at 100 mph (161 kph)
- Strength IV, structure with construction dead load
- Strength V, structure with construction dead and live load and wind at 55 mph (89 kph)

The construction limit states should be considered with respect to deck pour sequence, uplift at bearings, deck overhang brackets, and other applicable factors [AASHTO LRFD 2.5.3].

Load combinations and load factors for these limit states are given in the AASHTO LRFD Specifications [AASHTO-LRFD 3.4.1, 3.4.2].

5.5.2.4 Plate girders

5.5.2.4.1 Analysis and design

The load and resistance factor design method shall be used for all superstructure members.

Haunched girders may be considered for aesthetic reasons for any span length but, for economy, haunched girder configurations should not be considered for spans less than 400 feet (122 m).

In most cases the superstructure will require only standard cross frames. In unusual cases when cross frames need to be designed, they shall be designed by the load and resistance factor design method [BDM 5.5.2.4.1.16].

5.5.2.4.1.1 Analysis assumptions

Analysis for axial forces, shears, moments, and deflections shall be based on elastic behavior. Except at pier expansion joints, CWPG bridges shall be considered continuous over pier supports.

Changes in girder cross section shall be taken into account for continuous girder analysis. See the section properties article for cross sections to be used for analysis and strength computations [BDM 5.5.2.4.1.4].

5.5.2.4.1.2 Materials

All structural steel shall be one of the following grades specified in ASTM A709/A709M:

- Grade 36 (250),
- Grade 50 (345),
- Grade 50W (345W),
- Grade HPS-50W (HPS-345W),
- Grade HPS-70W (HPS-485W), and
- Grade HPS 100W (HPS 690W).

Generally Grade 36 (250) and Grade 50 (345) are used for galvanized or painted steel; Grade 50W (345W), Grade HPS-50W (HPS-345W), and Grade HPS-70W (HPS-485W) are used for weathering steel; and higher grades are not used. The designer shall check availability of Grade 50W (345W) plate in thicknesses greater than 3 inches (75 mm), Grade HPS-50W (HPS-345W) plate in thicknesses greater than 2 inches (50 mm), and Grade HPS-70W (HPS-485W) in thicknesses greater than 1.5 inches (38 mm).

Also note that Charpy V-notch (CVN) requirements apply to all members listed in the Iowa DOT standard specifications [IDOT SS 4152.02] plus the stiffeners connecting the floor beam diaphragms to the girders at all expansion joint locations. The CVN impact energy requirements in the Iowa DOT Standard Specifications correspond with nonfracture-critical requirements for Temperature Zone 2 in the AASHTO-LRFD Specifications [AASHTO-LRFD 6.6.2].

Fill plates 3/16 inch (5 mm) or less in thickness shall be A606 Type 4 steel, thickness specified by gage, without CVN requirements.

The bid item "Structural Steel" shall be used for all grades. Where more than one grade of steel is specified for a bridge design, a note stating the components to be made from each grade shall be included on the plans.

All CWPG bridges shall be designed with unpainted weathering steel unless site conditions are unfavorable as described in FHWA Technical Advisory T 5140.22 "Uncoated Weathering Steel in Structures" [BDM 5.5.2.1.5]. Unfavorable site conditions that may apply in Iowa are the following:

- Industrial areas where concentrated chemical fumes may drift directly onto the bridge,
- Grade separations in “tunnel-like” conditions, and
- Low level water crossings.

Review each bridge that may have unfavorable site conditions with the supervising Section Leader before beginning design.

For CWPG bridges designed to metric dimensions, use hard metric plate thicknesses for flanges and webs, and use soft metric thicknesses rounded to the nearest tenth of a millimeter for miscellaneous plates such as stiffeners and splices. The hard and soft thicknesses are given in *Iowa DOT Bridge Design Office Metric Handbook* [BDM 5.5.2.1.5]. The soft conversion policy promotes economy by allowing fabricators to use available plate in English sizes for small components.

5.5.2.4.1.3 Design resistance [AASHTO-LRFD 6.10, Section 6 Appendix A]

The designer shall determine design resistance (or strength) and stresses in accordance with the basic AASHTO LRFD Specifications [AASHTO-LRFD 6.10]. The office does not permit use of Appendix A for determination of flexural resistance [AASHTO-LRFD Section 6 Appendix A].

5.5.2.4.1.4 Section properties [AASHTO-LRFD 4.6.2.6.1, 6.10.1.5]

The structural cross section of a straight, continuous welded plate girder varies with changes in steel cross section and with changes in the composite section from positive to negative moment regions. The office considers full composite action between girder and deck in positive moment regions and conservatively neglects any composite action between girder and reinforcing or deck in negative moment regions, except as needed for design of shear connectors. The cross sections required for analysis and design are given in Table 5.5.2.4.1.4 and apply for the following:

- Continuous member analysis to determine girder moments, shears, and deflections;
- Computation of girder resistance for strength limit states;
- Computation of girder stresses for service limit states;
- Design of shear connectors; and
- Determination of loads to abutments and piers.

Table 5.5.2.4.1.4. Structural cross sections for analysis and design of straight, continuous welded plate girders

Load or Design Condition	Structural Section for Positive Moment Regions	Structural Section for Negative Moment Regions
DC1	Steel section	Steel section
DC2(1) and DW(1)	Composite section(3) with concrete deck transformed by 3n	Steel section(4)
Live or Live Plus Dynamic Load Allowance(2), Fatigue of Steel Girder	Composite section(3) with concrete deck transformed by n	Steel section(4)
Shear Connectors	Composite section with concrete deck transformed by n	Composite section with longitudinal deck reinforcement(5)

Table notes:

(1) See the dead load article for distribution of DC2 and DW [BDM 5.5.2.2.1].
(2) See the deflection and camber article for application of live load plus dynamic load allowance for deflection computations [BDM 5.5.2.4.1.12].
(3) For composite positive moment sections it is desirable to keep the neutral axis below the top flange of the steel girder. If the neutral axis is in the concrete deck, the deck will not be fully utilized in the cross section.

(4) Shear connectors are added to girders in negative moment regions because it usually is not practical to provide the number of shear connectors required to anchor the section at the girder splice point, but the concrete deck in negative moment regions is not considered part of the structural cross section. This office policy of neglecting the deck in negative moment regions is intended as a substitute for the AASHTO LRFD stiffness policy [AASHTO-LRFD 6.10.1.5].
(5) The designer need not rerun software to determine shear ranges with longitudinal deck reinforcement in the negative moment regions; however the designer shall include the deck reinforcement in fatigue design of the shear connectors.

If software used for girder design is not fully compatible with the cross sections in Table 5.5.2.4.1.4, it may be necessary to run the software more than once, with different conditions for each run. If there are any conflicts with the cross sections the designer shall consult with the supervising Section Leader.

For determining composite section properties the deck thickness shall be reduced by 0.5 inch (13 mm) to account for the built-in wearing surface. The effective deck width shall be determined in accordance with AASHTO LRFD Specifications for effective flange width [AASHTO-LRFD 4.6.2.6.1] and considering the reduced deck thickness.

5.5.2.4.1.5 Moment [AASHTO-LRFD 4.6.4, 6.10.6.2.3, Section 6 Appendix B]

In CWPG bridges the office does not permit redistribution of negative moments as discussed in the AASHTO LRFD Specifications [AASHTO-LRFD 4.6.4, 6.10.6.2.3, Section 6 Appendix B].

5.5.2.4.1.6 Flanges [AASHTO-LRFD 6.10.2.2, 6.10.3, C6.10.3.4]

The designer should attempt to use flange plates not exceeding a thickness of 2 inches (50 mm) because fabricators may have difficulty obtaining thicker plates. If thicker plates are required due to excessive flange width, the office prefers plates not exceeding a thickness of 2.5 inches (63 mm), in order to avoid potential cracking and lamellar tearing. Flange width should be selected to the nearest whole inch (25 mm). Minimum top flange size is 12 inches by ¾ inch (300 mm by 19 mm), and the flange size shall meet all of the size and proportion rules for flexural members [AASHTO-LRFD 6.10.2.2] and for constructibility [AASHTO-LRFD 6.10.3].

Fabricators can reduce costs if welded flange plate transitions do not change both thickness and width at the same location. It is cheaper for some fabricators to order wide plates, make a single butt splice weld, and flame cut flanges to the desired width from the large welded plate. If the fabricator cannot prepare large flange plates, each flange must be custom cut and welded individually. Therefore, the designer should attempt to use constant width flanges in regions where flange transitions are commonly used, such as in negative moment regions.

In order to save material, present office practice is to consider changing the flange thickness in the negative moment regions of continuous welded plate girders. However, a weight savings of about 1200 pounds (544 kg) per flange splice should be realized in order to justify the shop welded butt joint. If the weight of steel saved is sufficient, the designer should reduce flange thickness where negative moment is lower but maintain flange width; otherwise the designer should extend the thick flange plate throughout the negative moment region.

At welded flange splices the office requires that the thinner flange plate have at least 50% of the cross sectional area of the thicker plate. This practice reduces stress concentration at the transition from the larger to smaller flange.

For aesthetic reasons, at bottom flange field splices between positive and negative moment regions the designer should preferably maintain approximately the same flange width. If the difference between top or bottom flange widths on either side of a field splice exceeds 2 inches then the wider flange should be clipped at a 1:1 transition.

If it is necessary to reduce a flange in both width and thickness to limit the maximum thickness to less than 2.5 inches (63 mm), the designer should locate the welded butt splice at least 3 inches (75 mm) from the end of the width transition. This eases fitting of the run-off tabs needed to make the butt weld.

For girder stability during shipping and erection the office prefers that the ratio of shipping piece length to compression flange width not exceed 85 [AASHTO-LRFD C6.10.3.4].

5.5.2.4.1.7 Lateral bracing [AASHTO-LRFD 6.7.4, 6.7.5]

The designer shall investigate the need for lateral bracing for all CWPG superstructures [AASHTO-LRFD 6.7.4, 6.7.5].

If girders have section changes in high stress regions, such as flange butt splices in negative moment regions, the designer shall investigate lateral bracing requirements at the points of section change.

If a lateral bracing check is inadequate, the designer shall consider the following corrective measures in the order listed:

(1) At locations of section change, extend the larger flange sizes beyond the overstressed regions.
(2) Increase the flange width in the overstressed regions.
(3) Reduce the diaphragm or cross frame spacing in the overstressed regions.
(4) Add lateral bracing in the exterior bays of the overstressed regions.

5.5.2.4.1.8 Shear connectors [AASHTO-LRFD 6.10.10]

The designer shall use 7/8 inch (22.2 mm) diameter shear studs, unless the supervising Section Leader approves an exception.

Shear stud height will vary depending on girder top flange thickness. For typical girders the designer should use a 3.5 inch (90 mm) height in negative moment regions and a 5.0 inch (125 mm) height in positive moment regions. Stud heights shall be limited to 3.5 inch (90 mm), 4.0 inches (100 mm), 5.0 inches (125 mm), and 6.0 inches (150 mm).

For haunch design, the haunch thickness shall be 0-inch (0-mm) minimum and 2-inch (50-mm) maximum.

For allowable field haunch, the haunch will be limited by the following [BDM 5.3.3.1].

- Up to 0.5 inch (13 mm) embedment of the top flange into the deck measured at the edge of the flange,
- 2.5 inch (65 mm) clearance between the top of deck and shear stud,
- 2.0 inch (50 mm) minimum penetration of shear stud into the deck, and
- 3.5 inch (100 mm) maximum haunch measured at the centerline of the girder.

Shear connectors shall be designed according to the AASHTO LRFD Specifications [AASHTO-LRFD 6.10.10]. Although the longitudinal deck reinforcing is not considered part of the section properties for resisting negative moments, the reinforcing shall be considered part of the section properties when designing the shear connectors. The provisions for additional connectors at points of permanent load contraflexure shall not apply [AASHTO-LRFD 6.10.10.3].

Shear connectors shall be designed for fatigue and checked for strength limit states [AASHTO-LRFD 6.10.10.1.2].

Designers shall note that fatigue design of the shear connectors themselves does not constitute satisfying fatigue design of the base metal at a shear connector as stated in the last paragraph of AASHTO-LRFD 6.10.10.2 which says “The effect of the shear connector on the fatigue resistance of the flange shall be investigated using the provisions of Article 6.6.1.2” [BDM 5.5.2.4.1.15].

Shear connector spacing shall not exceed 24 inches (610 mm) center-to-center longitudinally except in the following circumstances.

- Shear connectors shall be omitted in the region of the girder equal to the depth of the girder each side of the centerline of pier.
- Shear connectors may be spaced to clear top flange splice plates up to 42 inches (1070 mm) in length at points of contraflexure.

Shear connectors shall be attached to top flange splice plates greater than 42 inches (1070 mm) in length. Shear connectors attached to splice plates shall be spaced at no more than 24 inches (610 mm) and will require a minimum of 2 shear connectors per row. Designers shall provide a minimum of 2.5 inches (65 mm) between centerline of shear connector and centerline of bolt. Designers may need to reduce the height of shear connectors attached to the top flange splice plate in order to meet clearance requirements in the deck. When splices are used at points other than points of contraflexure the designer shall consult with the Chief Structural Engineer. Shear connectors shall not be placed closer than six stud diameters center-to-center longitudinally [AASHTO-LRFD 6.10.10.1.2]. Transverse spacing of shear connectors shall not be less than four stud diameters center-to-center [AASHTO-LRFD 6.10.10.1.3].

If a girder is discontinued and the discontinued end supported on a cross beam, shear studs shall be installed on the top flange of the cross beam.

5.5.2.4.1.9 Shear

Reserved

5.5.2.4.1.10 Web [AASHTO-LRFD 6.10.2.1, 6.10.3]

Generally web plates should be 7/16 inch (11 mm) or thicker. Web depth should be selected to the nearest whole inch (25 mm). Web size shall meet all of the size and proportion rules for flexural members [AASHTO-LRFD 6.10.2.1] and for constructibility [AASHTO-LRFD 6.10.3].

In most cases, for economy the designer initially should determine the web thickness based on an unstiffened web plate and reduce the thickness by 1/16 inch (2 mm) for final design. The final design then will be based on a partially stiffened web that minimizes the need for intermediate stiffeners. However, the designer should consider an unstiffened or fully stiffened web if either of those choices has an economic advantage over a partially stiffened web.

5.5.2.4.1.11 Stiffeners [AASHTO-LRFD 6.10.11.1, 6.13.3.4]

Longitudinal stiffeners are required if $D/t_w > 150$ where D and t_w are web depth and thickness, respectively [AASHTO-LRFD 6.10.2.1.1]. For economy the office prefers that designers avoid using longitudinal stiffeners for spans less than 300 feet (91.5 m) and girder web depths less than 10 feet (3.050 m). Additionally, longitudinal stiffeners are often only economical for $D/t_w > 200$. Designers should consult with the Chief Structural Engineer before electing to use longitudinal stiffeners. In general the designer should minimize the number of stiffeners. The office prefers multiples of 1/2-inch (13-mm) dimensions for widths of stiffener plates. For economy, metric thicknesses should be soft converted from standard English sizes so that the fabricator can use available stock of steel plate. See *Iowa DOT Bridge Design Office Metric Handbook* for soft metric conversion of standard English plate sizes.

Present office practices for intermediate stiffeners, intermediate diaphragm stiffeners, and bearing stiffeners at abutments and piers are shown on standard sheets [OBS SS 1021] and in Figure 5.5.2.4.1.11. Practices for bearing stiffeners are summarized in Table 5.5.2.4.1.11.

Intermediate stiffeners (without diaphragm connections) should be placed on only one side of the web and shall be welded to the girder web and compression flange. The stiffeners shall be tightly fitted to the tension flange but not welded to that flange.

Intermediate stiffeners and intermediate diaphragm stiffeners should be aligned perpendicular to the web.

Intermediate diaphragm stiffeners shall be rigidly attached to both top and bottom flanges as required in the AASHTO LRFD Specifications [AASHTO-LRFD 6.10.11.1]. This attachment is required because differential movement of adjacent girders at the diaphragm location can cause distortion fatigue due to out-of-plane bending in the girder web if the stiffeners are not rigidly attached.

A standard sheet [OBS SS 1021] shows two rigid attachments of diaphragm stiffeners to girder flanges, a bolted attachment and a welded attachment. Because of its high cost, the bolted attachment is intended only for bridges for which the fatigue limit state cannot be accommodated by the welded attachment [BDM 5.5.2.4.1.15] or other means.

To avoid use of the bolted tab connection the designer should first check the fatigue limit state at the diaphragm connections to determine if a welded detail is acceptable. If stresses are too high to permit the welded detail, the designer should consider increasing the flange thickness to lower the stress range for fatigue or moving the diaphragm. The designer shall compare costs between the option of bolted tabs with initial flange thickness and the option of welded attachments with thicker flange. If the cost of the welded attachments with thicker flange has the higher cost, the designer shall use the bolted tab detail and specify the locations for the bolted tabs on the plans. The designer should discuss the options with the supervising Section Leader.

Typically bearing stiffeners should be aligned normal to the girder. If shop drawings show stiffeners aligned to be vertical after erection, the case shall be referred to the Chief Structural Engineer for approval.

Bearing stiffeners are attached to the girder web and bottom flange with a fillet weld. Attachment to the top flange is dependent on the diaphragm arrangement at the support. For all abutment bearing stiffeners and for all pier bearing stiffeners where the diaphragms are skewed parallel with the centers of bearings, a tight fit to the top flange is sufficient. There will be no differential movement of the diaphragm ends in these situations, so no out-of-plane bending of the girder web will result.

For skewed bridges with diaphragms perpendicular to the girder webs, the pier bearing stiffeners shall be attached to the top flange to eliminate out of plane bending of the girder web. See Table 5.5.2.4.1.11 for a summary of bearing stiffener requirements.

Table 5.5.2.4.1.11. Bearing stiffener requirements

Substructure component	Skew, degrees	Diaphragm direction	Stiffener direction / detail
Abutment	≤ 30(1)	Parallel with centerline of bearings	Parallel with centerline of bearings / tight fit at girder top flange, Figure 5.5.2.4.1.11
Abutment	> 30	Perpendicular to girder web	Perpendicular to girder web / tight fit at girder top flange, additional bent plate for diaphragm attachment, Figure 5.5.2.4.1.11
Pier	≤ 20	Parallel with centerline of bearings	Parallel with centerline of bearings / tight fit at girder top flange, [OBS SS 1021]
Pier	> 20	Perpendicular to girder web	Perpendicular to girder web / bolted attachment to top flange, [OBS SS 1021]

Table note:

(1) If stiffeners are skewed greater than 30 degrees, the stiffeners usually cannot be placed with double fillet welds.

For bridge skews less than or equal to 30 degrees, the abutment diaphragms shall be connected to bearing stiffeners aligned with the centerline of bearings. In the upper part of Figure 5.5.2.4.1.11 two details for fillet welding a skewed stiffener to the girder web are shown. Detail A may be used if the skew

angle and stiffener thickness are such that the joint opening between stiffener edge and web does not exceed 1/8 inch (3 mm). If the opening is greater than 1/8 inch (3 mm), Detail B shall be used. For Detail B, indicate on the plans that the stiffener shall be beveled to fit against the web, and indicate a double fillet weld.

If skewed bearing stiffeners are used, the sole plate size shall be made sufficiently large to cover the stiffener end.

For bridge skews greater than 30 degrees the bearing stiffeners at abutments shall be placed perpendicular to the girder web. The abutment diaphragms shall be connected to ½ inch (12 mm) bent plates as shown in the lower part of Figure 5.5.2.4.1.11. The designer should provide about 2 inches (50 mm) between the bent plates and the bearing stiffeners so that there is room to make the fillet welds. The designer also should provide sufficient cope of the diaphragm to allow installation.

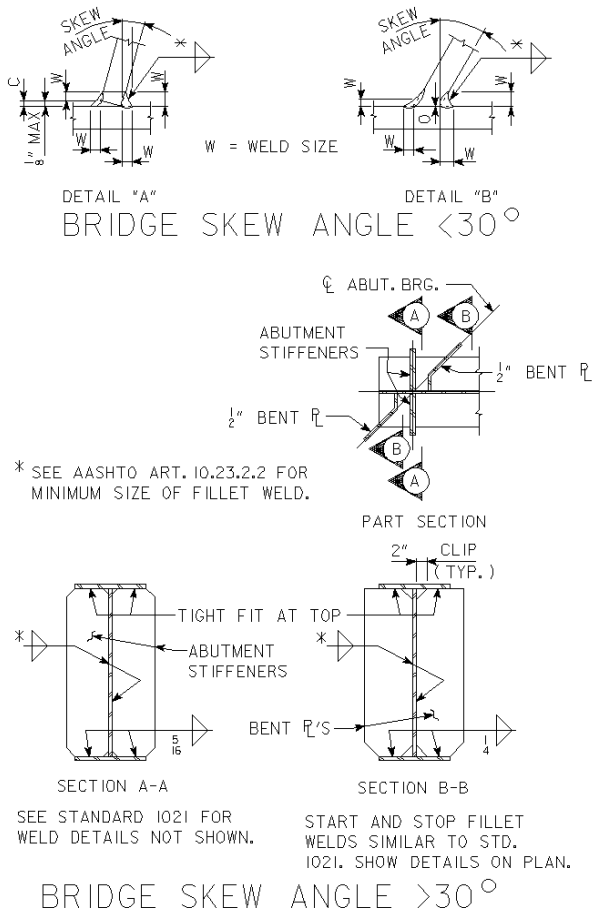

Figure note:

- For a bridge skew angle of 30 degrees, use the details for bridge skew angle less than 30 degrees.

Figure 5.5.2.4.1.11. Bearing stiffener details at abutment

The standard sheet [OBS SS 1021] and Figure 5.5.2.4.1.11 do not give fillet weld sizes, and those sizes shall be determined based on the AASHTO minimum sizes [AASHTO-LRFD 6.13.3.4], preheat considerations, and stress computations. For weld preheat information, consult the edition of the American Welding Society's *Bridge Welding Code, D1.5* referenced in the standard specifications [IDOT SS 2408.03, B].

5.5.2.4.1.12 Deflection and camber [AASHTO-LRFD 2.5.2.6.2, 2.5.2.6.3, 3.6.1.1.2]

Unless the bridge site presents vertical clearance or profile grade issues the goal is to set composite girder depths at about 1/25 of the span. If it is necessary to use shallower girders the office prefers that the designer consider the AASHTO LRFD span-to-depth ratios [AASHTO-LRFD 2.5.2.6.3] to be minimum. For composite girders with a depth less than 1/25 of the span, deflection may control design of the cross section.

The office requires the designer to check deflection according to the AASHTO LRFD criteria [AASHTO-LRFD 2.5.2.6.2]. Preferably the deflection for live load plus dynamic load allowance should not exceed L/1000, but in no case shall the deflection exceed L/800. For bridges that carry pedestrian traffic the

deflection for live plus dynamic load allowance shall not exceed L/1000. If live plus dynamic load allowance deflection controls the design, the designer shall consult with the supervising Section Leader.

When computing deflections the designer shall use the number of 12-foot (3.600-meter) wide design traffic lanes that fit on the roadway with the applicable multiple presence factor for three or more lanes [AASHTO-LRFD 3.6.1.1.2]. Live load plus dynamic load allowance shall be distributed equally to all girders.

The designer shall determine camber to account for noncomposite dead load, DC1, deflections. For bridges that have extra composite dead load, DC2 or DW, such as sidewalks, median structures, planters, or large utility pipes, the designer shall determine camber to account for all dead load: DC1, DC2, and DW. The fabricator is required to provide the camber by cutting the web plate, with an allowance to compensate for the effect of welding operations to be performed on the girder during fabrication [IDOT SS 2408.02, K]. The allowance is not to be addressed on the shop drawings. Camber in plate girders shall not be induced or corrected by local heating without prior approval.

5.5.2.4.1.13 Welded connections

The designer should avoid field welded connections. All field welding designations shall be approved by the supervising Section Leader.

Field welding of previously galvanized surfaces is not encouraged. If field welding is necessary and approved by the supervising Section Leader, the repair of the galvanizing shall be specified to follow “ASTM A780-01, Standard Practice for Repair of Damaged and Uncoated Areas of Hot-Dip Galvanized Coatings.” The surface to be repaired shall be cleaned as described in Annex A1 and repaired with zinc-based solder as specified in Article 4.2.1 or cleaned as described in Annex A2 and repaired with paint containing zinc dust as specified in Article 4.2.2 of ASTM A780-01. The designer shall include a note that requires the galvanizing repair to be incidental to the field welding.

All welding and fabrication of CWPG bridges shall conform to *Bridge Welding Code, AWS D1.5M/D1.5:1995*, except as modified in the standard specifications [IDOT SS 2408.03, B].

In accordance with the standard specifications, one hundred percent of each flange butt weld subject to tension or reversal of stress shall be radiographed [IDOT SS 2408.03, B]. Fifty percent of each flange butt weld subject only to compression is to be radiographed. The designer shall check each butt splice primarily subject to compression for possible reversal of stress. The designer shall indicate on the plans which flange butt welded joints require full width radiographing and which joints require radiographing only fifty percent of the width. Figure 5.5.2.4.1.13-1 is the standard detail and inspection note for butt welding girder flanges.

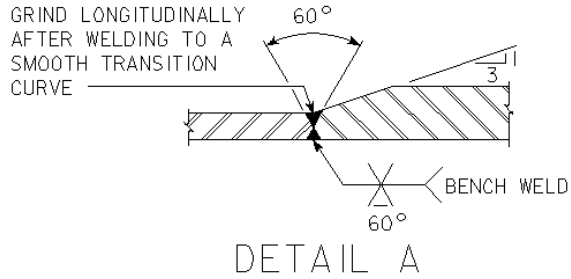

Figure notes:

- Bench weld indicates a machine-made shop weld.
- Refer to Article 2408.03, B, 6.7, of the Standard Specifications for additional welding information.

Figure 5.5.2.4.1.13-1. Flange butt weld splice detail and note

The standard specifications [IDOT SS 2408.03, B] require all groove welds in main members to be tested by nondestructive testing methods.

In cases where a longitudinal stiffener is needed, a flat horizontal surface should be provided for a groove weld attaching the longitudinal stiffener to the girder web to properly direct the beam of the ultrasonic testing equipment. Therefore, the end of the stiffener in the standard detail, Figure 5.5.2.4.1.13-2, should not be coped until after the ultrasonic testing is completed. In the standard detail, the coped radius at the end of the stiffener upgrades the detail from fatigue category E to C, thereby enabling the detail to more readily satisfy fatigue stress ranges.

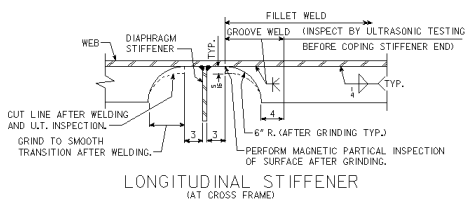

Figure 5.5.2.4.1.13-2. Longitudinal stiffener detail

5.5.2.4.1.14 Bolted connections [AASHTO-LRFD 6.13.2.7, 6.13.2.8]

The office prefers to use a single bolt size, 7/8 inches (22.2 mm) diameter. It is not economical to use metric bolts for metric projects. For metric projects, English bolt sizes shall be soft converted to metric and specified to sizes given in *Iowa DOT Bridge Design Office Metric Handbook*.

Bolts for use on weathering steel projects shall be A325 Type III with A563 Grade DH3 nuts and F436 Type III washers [BDM 13.9.2 E930, M930].

Tension control bolts [BDM 5.5.2.1.3] may be used for connections completed in the shop, but tension control bolts shall not be used for field connections.

Because it is difficult to control bolt length in the field, for shear resistance the designer shall assume that threads are included in shear planes.

The reduction in shear resistance for connections greater than 50.0 inches (1.270 m) in length applies for bolts in tension (flange) splices but not for bolts in shear (web) splices [AASHTO-LRFD 6.13.2.7].

If possible, the designer should avoid the use of 1/16 inch (2 mm) shims or filler plates in bolted connections.

For high strength slip-critical bolted connections, girder and connector surfaces may be either unpainted weathering steel or painted steel. Weathering steel is prepared with blast cleaning in accordance with the standard specifications [IDOT SS 2408.02, Q], and painted steel will have a single coat of solvent borne zinc silicate paint [IDOT SS 2408.02, Q]. The weathering steel surface qualifies by description as a Class B contact surface, and the painted surface has been qualified by test as a Class B surface. High strength, slip-critical bolted connections therefore shall be designed for Class B nominal slip resistance [AASHTO-LRFD 6.13.2.8].

Iowa requires all high strength bolted joints to be slip-critical connections. This includes joints that the AASHTO-LRFD Specifications would otherwise permit to be bearing-type connections: joints subject only to axial compression or joints on bracing members [AASHTO-LRFD 6.13.2.1.2]. Iowa does not specifically designate by note in the plan set that all high strength bolted joints be slip-critical connections. However, the Iowa DOT Standard Specifications require all high strength bolts be installed by the turn-of-the-nut method up to the tension required in a slip-critical connection [IDOT SS 2408.03, S, 5]. Additionally, as per the previous paragraph, all surfaces are prepared to or meet Class B contact surface requirements. Designers shall designate on the plans which connections are bearing-type connections only when a bearing-type connection is specifically desired.

5.5.2.4.1.15 Fatigue [AASHTO-LRFD 6.6.1.2, 6.6.1.3]

Office policy generally is to design for fatigue based on ADTT. For bridges carrying mainline Interstate traffic, however, the designer shall consult with the Chief Structural Engineer regarding the need to design for infinite fatigue life.

The designer shall follow the load-induced fatigue design rules in the AASHTO LRFD Specifications [AASHTO-LRFD 6.6.1.2] with the applicable resisting sections in Table 5.5.2.4.1.4. If design software does not permit use of the resisting sections required by the office, the designer should use the unfactored moments in the program output with the applicable resisting section to determine the stress ranges.

Designers should check all applicable components and details for load-induced fatigue. However, some commonly used components and details for new steel beam designs which provide less fatigue resistance and are therefore more likely to control portions of the design include the following:

- Detail Category C' - Base metal at the toe of transverse stiffener-to-flange fillet welds. Also includes similar welds for bearing stiffeners and connection plates.
- Detail Category C - Base metal at stud-type shear connectors attached by fillet or automatic stud welding.

The designer also shall follow the distortion-induced fatigue rules in the AASHTO LRFD Specifications [AASHTO-LRFD 6.6.1.3].

5.5.2.4.1.16 Diaphragms and cross frames [AASHTO-LRFD 6.7.4.1, 6.7.4.2, 6.9.4.1, 6.12.2.2]

Although the AASHTO LRFD Specifications do not limit diaphragm spacing to a specific maximum [AASHTO-LRFD 6.7.4.1], the office prefers that the permanent diaphragm or cross frame spacing not exceed the previous AASHTO Standard Specifications maximum of 25 feet (7.600 m). Regardless of spacing the designer will need to evaluate the need for diaphragms at all stages of construction and the final condition.

Permanent diaphragms and cross frames shall be placed perpendicular to girders except at abutments and piers of bridges with small to moderate skews. Policies for direction of abutment and pier diaphragms and cross frames for skewed bridges are given in the stiffener article [BDM Table 5.5.2.4.1.11]. A standard sheet illustrates the perpendicular pier diaphragm or cross bracing plan layout to be used at piers skewed more than 20 degrees [OBS SS 1021].

For superstructures with girder webs greater than 36 inches (915 mm) deep and with an angle between brace members of 30 degrees or more, the designer shall use the cross brace style of diaphragm shown in Figure 5.5.2.4.1.16-1 and on standard cross sections [OBS SS 4305-4310] and the alternate style [OBS SS 4305A] at pier and intermediate locations. Each plan set should include sheets for both the usual and alternate styles.

The designer need not check cross frame member sizes for typical bridges with all of the following characteristics:

- Cross frame spacing not exceeding 25 feet (7.600 m),
- Girder spacing not exceeding 10.25 feet (3.000 m),
- Girder depths not exceeding 6 feet (1.800 m),
- Four or more girders in the cross section,
- Spans not exceeding 150 feet (45 m), and
- Pier cross frames laid out for skew as per office practice [OBS SS 1021].

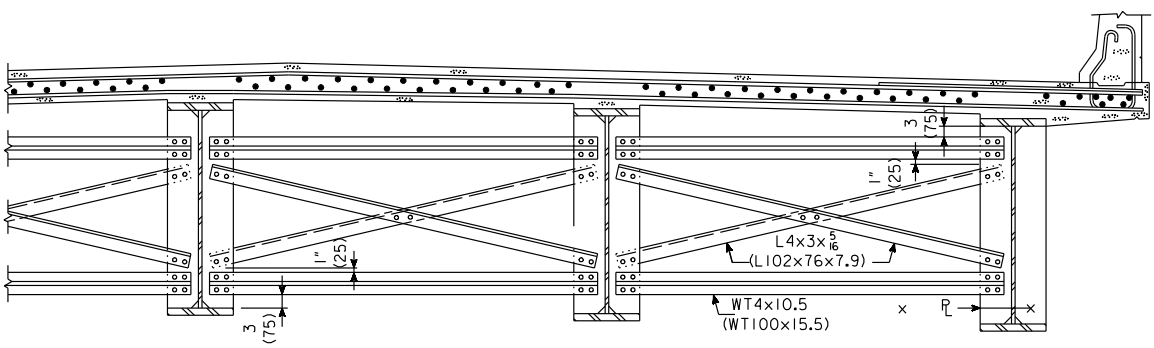

Figure 5.5.2.4.1.16-1. Typical cross brace diaphragm

In some cases when the angle between brace members is relatively large there may not be adequate clearance for two bolts placed at the center of the crossing as shown in Figure 5.5.2.4.1.16-1 or on Detail B on standard sheets [OBS SS 4305-4310]. If the bolts do not fit, the designer may extend the fill plate so that the bolts can be placed on each side of the crossing as shown in Figure 5.5.2.4.1.16-2.

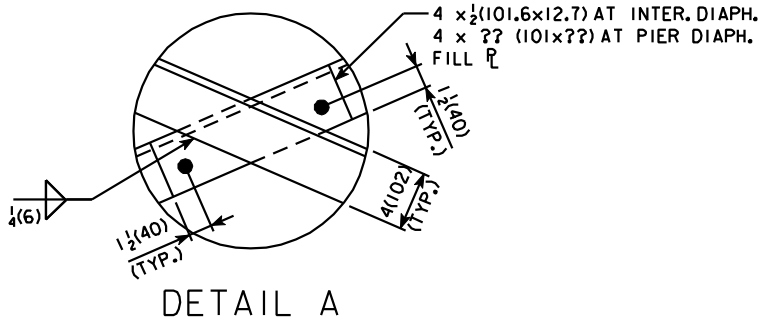

Figure 5.5.2.4.1.16-2. Alternate bolt detail at brace member crossing

For typical bridges meeting the characteristics given above except that girder webs are 36 inches (915 mm) deep or less, the designer may use the K-brace style of diaphragm fabricated from Grade 50 or 50W (345 or 345W) tees shown in Figure 5.5.2.4.1.16-3 or a channel or bent plate diaphragm at pier and intermediate locations. If the designer chooses to use a channel or bent plate diaphragm, the diaphragm shall be as deep as practical [AASHTO-LRFD 6.7.4.2]. The office prefers that the diaphragm depth be at least half the depth of the girder.

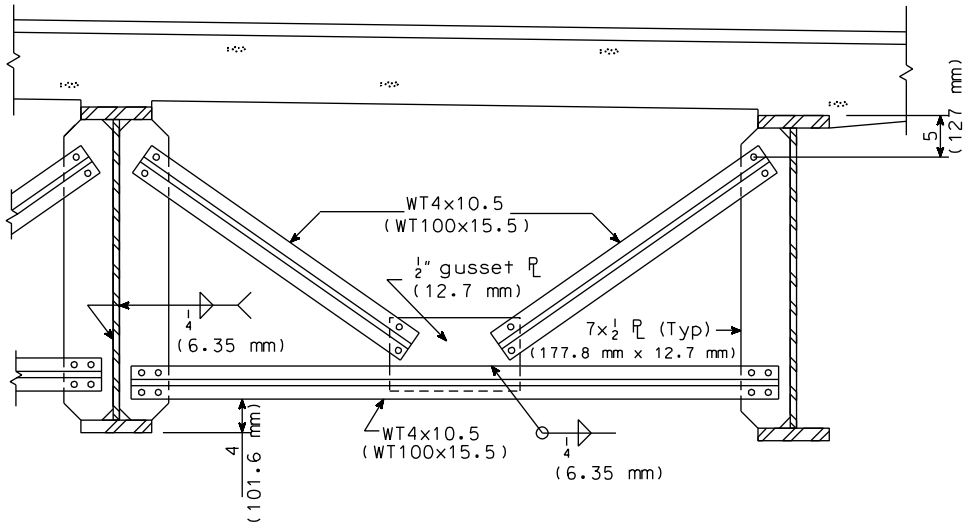

Figure 5.5.2.4.1.16-3. Alternate K-brace diaphragm for girder webs 36 inches (915 mm) deep or less

For bridges not meeting the typical characteristics listed above the designer shall design the cross- or K-frames for limit states during construction and after completion of the bridge [BDM 5.5.2.3.2, AASHTO-LRFD 6.7.4.1, 6.7.4.2, 6.9.4.1, 6.12.2.2]. For design under construction limit states for a typical bridge the designer may assume the entire girder-cross frame structure is in place.

Additionally, special cross- or K-frames shall be designed to meet the following:

- In an X-frame the connected crossing point shall not be considered a brace point if both diagonals are in compression. If one diagonal is in tension, a connected crossing point may be considered a brace for the compression member.
- Cross- or K-frame members shall meet the minimum slenderness for compression members, KL/r = 140. Minimum K for single angles shall be 1.0. Minimum K for structural tees may be 0.75. [AASHTO LRFD 4.6.2.5].
- Lengths of members bolted directly to stiffeners may be determined from centers of end connections.
- Stems of tees shall be a minimum of 0.25 inches (6.4 mm) thick [AASHTO LRFD 6.7.3].
- Flanges of tees and legs of angles shall be a minimum of 0.3125 inches (7.9 mm) thick [AASHTO LRFD 6.7.3].

In cases where girder depths vary, the designer shall consider constructibility issues. In most cases the designer should use a single diaphragm or cross frame type based on the minimum girder depth, but there may be project considerations that suggest multiple types. Before making a final decision the designer should consult *Guidelines for Design for Constructibility, G 12.1-2003* [BDM 5.5.2.1.5].

The designer should be aware that each weathering steel shape in cross frames and diaphragms amounts to a relatively small steel quantity, usually less than 5 tons (4.54 metric tons) per bridge. A minimum rolling mill quantity typically is at least 20 tons (18.14 metric tons). Therefore, the office prefers that the designer not use tees cut from S-shapes or other uncommon shapes because those shapes will have limited availability and high costs. Availability of uncommon shapes also fluctuates, and the availability may not be the same at the time of fabrication as at the time of design.

5.5.2.4.1.17 Horizontally curved superstructures [AASHTO 6.1, C6.1]

For horizontally curved CWPG superstructures the designer shall use the AASHTO LRFD Specifications, 4th Edition, which have incorporated the 2003 edition of the horizontally curved steel girder guide specifications. The specifications are limited to curved bridges with radii greater than 100 feet (30.480 m)

[AASHTO-LRFD 6.1]. To avoid construction problems, curved girder bridge spans should be limited to 350 feet (107 m) [AASHTO-LRFD C6.1].

Because of bridge curvature, girder lengths will vary from girder line to girder line. The preferred method for flange plate sizing is to use the same plate thickness for all girders in a region and vary flange plate widths to meet strength requirements.

5.5.2.4.1.18 Additional considerations [AASHTO-LRFD 6.10.1.7]

The AASHTO LRFD Specifications require minimum longitudinal reinforcement in the bridge deck in regions where either factored construction loads or the Service II load combination could cause sufficient tension to crack the deck [AASHTO-LRFD 6.10.1.7]. Office policy is to provide this minimum throughout the deck [BDM 5.2.4.1.1.8]. The reinforcement shall be one per cent or more of the cross sectional area of the concrete bridge deck and shall not exceed #6 (#19) in size. Although the office provides the minimum reinforcement, the office does not follow the AASHTO guideline that two-thirds be placed in the top layer. The designer may neglect the two-thirds rule and adjust the minimum reinforcement between top and bottom layers.

Nominal yielding of this negative moment reinforcement shall be prevented at the Service II load combination [AASHTO-LRFD C6.10.1.7].

Unfactored reactions for abutment and pier supports, and unfactored maximum moments for positive and negative moment regions for each different girder shall be organized in a table on the bridge plans. Within the tables the reactions and moments shall be listed for design DC1, design DC2 and DW, design truck plus lane plus dynamic load allowance, design tandem plus lane plus dynamic load allowance, and the total.

Although some fabricators may be able to fabricate and ship girders lengths to 150 feet (45.7 m) the office prefers that the maximum length for any girder section between end and splice or between splices be 120 feet (36.5 m). This maximum length is intended to permit more fabricators to bid on CWPG bridge projects and to avoid fabrication and shipping difficulties.

5.5.2.4.2 Detailing

In order to promote proper welding and weld inspection for CWPG bridges, the designer shall provide on the “Girder Elevation” detail the location of tension and compression areas for both the top and bottom flanges of the girder. The location of tension and compression flanges along the length of the span is to be based on the dead load inflection points in the member. These locations will normally correspond with the locations of the bolted field splices.

Stiffeners connecting floor beam diaphragms to the girders at all expansion joint locations are part of the system that transfers load from the floor beam to the longitudinal girder, and therefore Charpy V-notch testing is required for the stiffeners. Because the Charpy requirements in the Iowa DOT standard specifications [IDOT SS 4152.02] do not include the stiffeners, the designer shall add a note to the plans requiring Charpy testing for the stiffeners.

Because of OSHA safety regulations all shear studs are to be installed in the field after bridge deck formwork is in place. The designer shall not specify shop welding of shear studs.

Shop welded flange splices shall be at least 6 inches (150 mm) from a stiffener, 6 inches (150 mm) from a web splice, and 4 inches (100 mm) from a shear connector. Web splices shall be at least 6 inches (150 mm) from a stiffener. Splices shall not interfere with other bridge components.

Flange deflectors shall be provided on the outside flanges of exterior weathering steel girders to divert runoff ahead of abutments and piers. The deflectors shall be as shown on a standard sheet [OBS SS 1021].

When preliminary design indicates that the design or lesser flood at a bridge site would extend from integral abutment to integral abutment above the bottom flanges of girders, during a flood the superstructure will be subjected to uplift from trapped air between girders. In that case the preliminary design (or type, size, and location, commonly called the TS&L) will have a recommendation for venting of the steel superstructure. Unless the supervising Section Leader approves an alternate method of venting, the designer shall provide vent holes in beam webs. The holes should be 2 inches (50 mm) in diameter, have about 8 inches (200 mm) of clearance from the top flange, and be located at the third points of girder length. Locations of the holes may be shifted to give at least 6 inches (150 mm) of clearance to cross frames, stiffeners, and other obstructions.

Unpainted weathering steel is to be blast cleaned and water washed to promote uniform weathering as described in the standard specifications [IDOT SS 2408.02, Q].

The Office of Bridges and Structures will require painting the fascia of exterior girders on the median side only where the median opening is 30’ or less (see figure 5.5.2.4.2 below). The purpose of this limited painting is to protect the median girders from exposure to contaminated snow that is typically pushed over the railing.

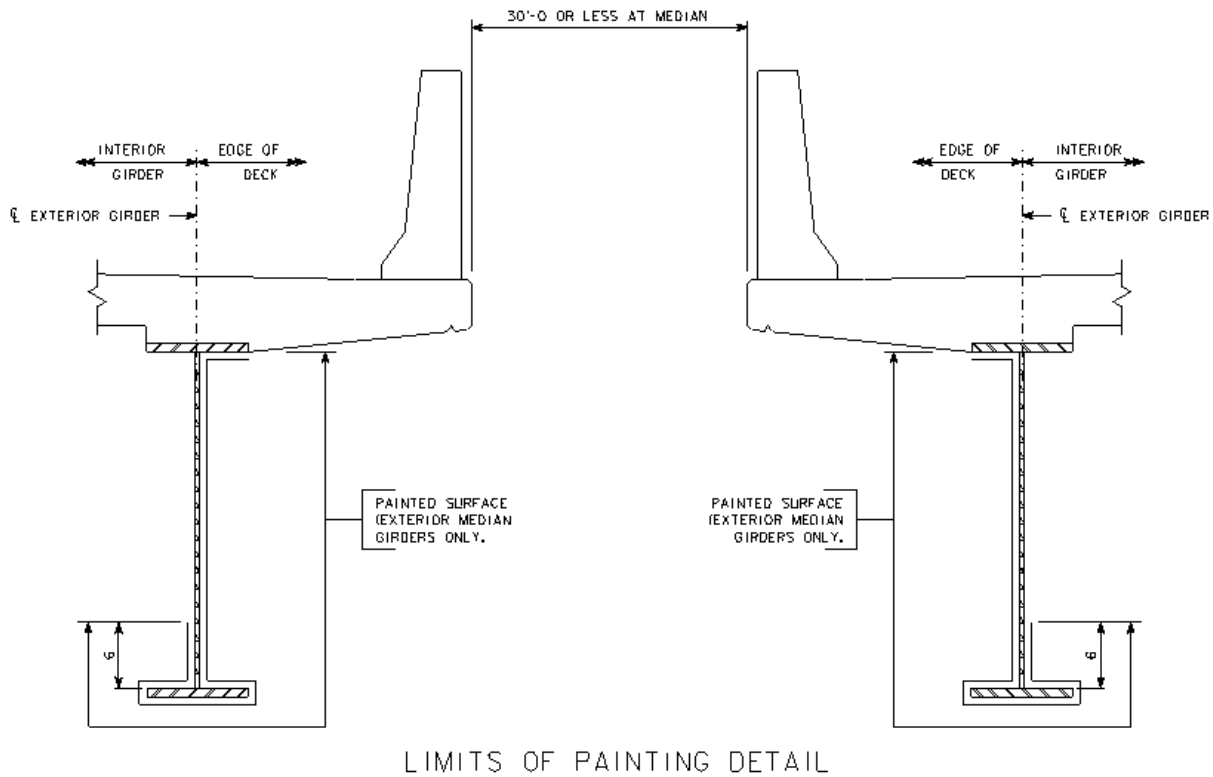

Figure 5.5.2.4.2. Painting limits for fascia of exterior girders when median is 30’ or less

Routine maintenance will consist of pressure washing to remove surface chlorides and accumulated dirt and debris. Pressure washing is necessary to remove contaminants from the rough, porous surface of weathering steel. New bridges will be washed in areas subject to chloride contamination annually for the first five years of service. The frequency for washing in-service bridges will be determined based on factors including exposure to chloride contamination, traffic volume and condition.

Structural steel weight shall be determined using the guidelines in the standard specifications [IDOT SS 2408.04, C]. Protruding parts of pintles and similar anchor studs are added, but holes for bolted connections are not deducted. Structural steel weight shall include no allowance for coatings such as paint or galvanizing.

Unless otherwise shown on the plans, the following areas of weathering steel are to be painted:

- All steel near expansion joints,
- All bearing assemblies except galvanized parts, and
- Girder ends embedded in concrete.

See the standard specifications for detailed requirements [IDOT SS 2408.02, Q].

All barrier rail to bridge deck/wing reinforcement for interstate and primary bridges shall be stainless steel. All other reinforcement in CWPG superstructures shall be epoxy coated, including the following:

- All deck reinforcing steel, longitudinal and transverse, top and bottom.
- All reinforcing in concrete diaphragms.
- All barrier rail and median barrier reinforcing steel, longitudinal and transverse, except as noted above.
- All light pole base reinforcing steel.

When computing weights of non-high-strength bolts the designer should use the 9th Edition of AISC's *Manual of Steel Construction* [BDM 5.5.2.1.5]. Later editions of the manual have incorrect bolt and nut descriptions.

5.5.2.4.3 Shop drawings

In order to fabricate steel for highway bridges, fabricators must be approved in advance [OM IM 557 and Appendices]. Ensuring that a fabricator is approved shall be checked by the office engineer until a new process is developed to verify approval of the fabricator prior to shop drawing submittal.

The review of working drawings submitted by the contractor covers only requirements for strength and arrangement of component parts [IDOT SS 1105.03]. The office reviews shop drawings to ensure that the structural adequacy of the design is maintained as detailed on the original design drawings. The office review stamp is shown in Figure 5.5.2.4.3-1.

REVIEWED BY OFFICE OF BRIDGES AND STRUCTURES
IOWA DEPARTMENT OF TRANSPORTATION

Reviewed in accordance with current policy

December 31, 2013

✓ **NO EXCEPTIONS TAKEN**
❑ **MAKE CORRECTIONS NOTED (NO RESUBMITTAL NEC.)**
❑ **AMEND AND RESUBMIT**

This review is for strength and arrangement of component parts. Any deviation from the plans or specifications not clearly noted by the Contractor has not been reviewed. Review by the Engineer shall not serve to relieve the Contractor of the contractual responsibility or any error or deviation from the contract requirements.

Figure 5.5.2.4.3-1. Shop drawing review stamp

The extent of the shop drawing review will vary with each design. On curved and complex designs, the reviewer shall discuss in advance the extent of the shop drawing review with the supervising Section Leader.

The office prefers that straight and curved CWPG superstructures be detailed by the fabricator for a steel dead load fit (SDLF). A no-load fit (NLF) is recommended for horizontally curved bridges with arc span lengths (L) exceeding 300' (91.5 m) at the bridge centerline and where L/R is greater than 0.1 where R is the radius at the bridge centerline.

A detailed check of the dimensions on the shop drawings usually is not required. However, depending upon the level of difficulty or complexity of the structure, a spot check of critical locations may be performed. The dimension check should be based on sound engineering judgment.

Changes from the contract plans or specifications, regardless of magnitude, shall not be allowed unless they have been documented previously as acceptable or have been approved by the supervising Section Leader.

The following review guidelines for the typical wide flange or CWPG bridge establish uniform practice and avoid omissions.

The following items shall be included in the review:

(1) Verify that all material shown on the shop drawings conforms to the size, thickness, and material type shown on the contract plans.
(2) Check the flange and web plate cutoffs.
(3) Check the location of main beam and girder splice locations and details of connections not dimensioned on the contract plans.
(4) Verify alignment of bearing stiffeners normal to girders.
(5) Check number and approximate location of diaphragms.
(6) Check the number and size of bolts (diameter only–not length) in all connections.
(7) Check the numbers of shear studs.
(8) Check the size of all welds and welding details.
(9) Check the finish on bearing assemblies.
(10) Ensure that the amount of camber and the camber diagram configuration conform to the contract plans.

The following items do not need to be included in the review:

(1) The length of members or components
(2) The location and gauge of holes
(3) The camber diagram ordinates (girder lay-down dimensions)
(4) Web cutting diagrams
(5) Attachments to expansion plates
(6) Bills of materials
(7) Weld procedures (These are checked by the Office of Materials. See Figure 5.5.2.4.3-2.)

The following weld detail typically is permitted when shown on shop drawings:

- Abutment anchor bar weld substitution: In cases where the abutment bearing is anchored to the backwall with 1-inch (25-mm) square bars, the standard detail [OBS SS 4541] shows each anchor bar cut through its anchor plate, with a ¼-inch (6-mm) fillet weld all around on the far side. The fabricator may substitute on the near side of the anchor plate an all-around 45-degree, 5/16-inch (8-mm) partial-penetration groove weld reinforced with a 5/16-inch (8-mm) fillet weld. The partial penetration weld eliminates the need to cut a hole in the anchor plate.

Review and oversight of projects involving structures designed and developed by consultants is the responsibility of the Consultant Coordination Section. The procedure in Figure 5.5.2.4.3-2 shall be followed for all shop drawings reviewed by consultants.

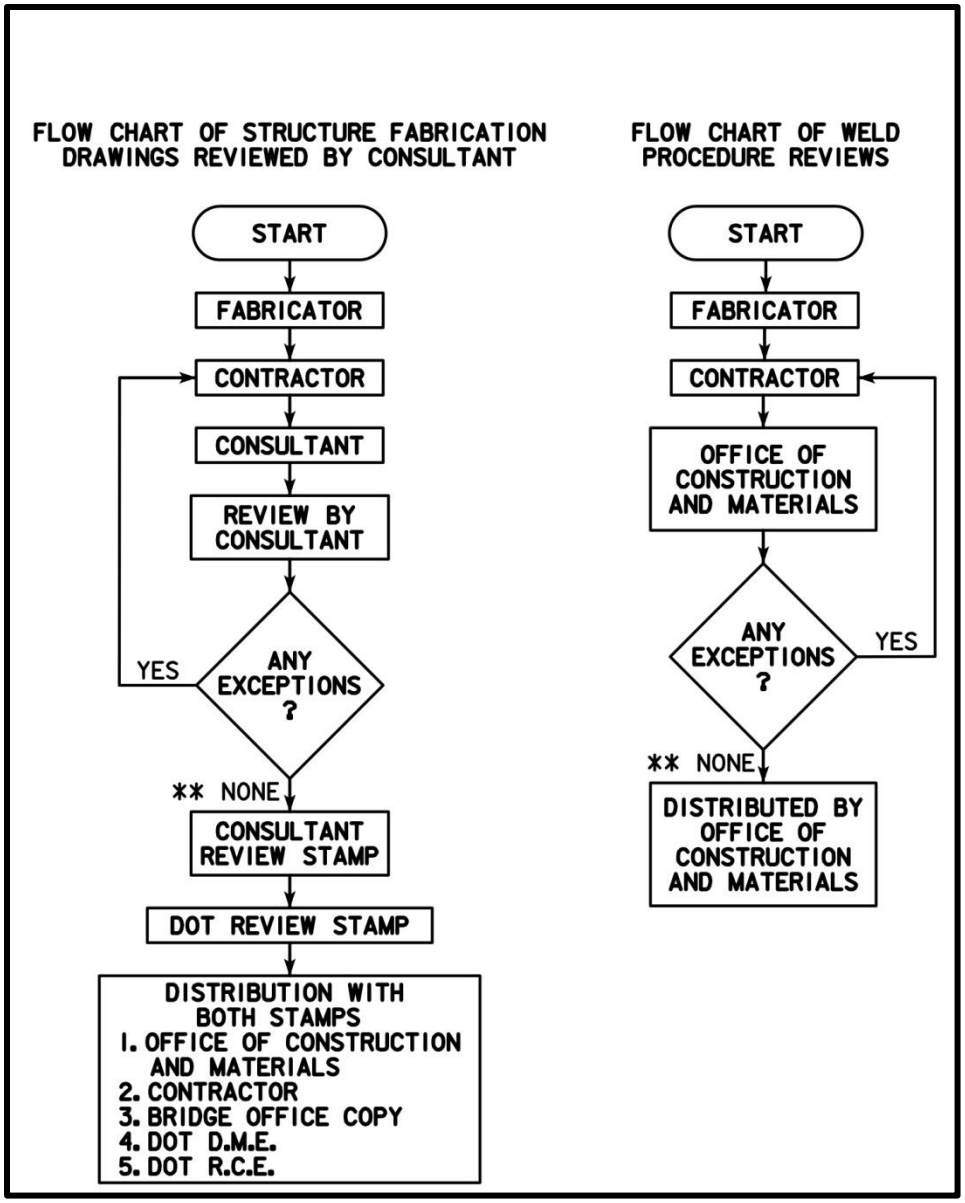

Figure notes:

* There is a separate approval process between the fabricator and the Iowa DOT Office of Construction and Materials for welding procedures, quality control, quality assurance, etc.

** Including "MAKE CORRECTIONS NOTED (NO RESUBMITTAL NECESSARY)"

Figure 5.5.2.4.3-2. Flow chart for shop drawing review by consultant

5.5.2.4.4 Fracture critical members

FCMs are defined as components in tension whose failure is expected to result in the collapse of the bridge or the inability of the bridge to perform its function. The most common types of FCMs are tension flanges and parts of webs of flexural members such as beams and girders. [Examples of FCM include

tension members of trusses, particularly the lower chords, and in some cases diagonals. The rib of an arch may experience tension and may be considered as FCM.]

Design procedures for FCMs start by evaluating the need for an FCM. FCMs are ideally eliminated at the planning and design stage. FCMs are used if no appropriate or acceptable alternative to their use is found. When FCMs are incorporated into a bridge, design methods, practices, and polices to mitigate the risk associated with their use shall include:

- Designing for fatigue and fracture limit state in the AASHTO LRFD Bridge Design Specifications, which requires the design details to provide a minimum acceptable level of resistance to fatigue and fracture. These design specifications include the latest research in the area of fatigue and fracture in steel bridge elements, along with prescribing design loading and load factors that specifically address the unique aspects of fatigue in steel bridges.
- Avoiding welded details more prone to fatigue crack initiation. Fatigue cracks usually originate at a weld in a steel member. Commonly encountered welded steel details are categorized by the susceptibility to fatigue crack initiation.
- Using modern steels in the design with high levels of resistance to fracture, such as High Performance Steel which was specifically developed for high fracture toughness.
- Consider converting a FCM into a non-FCM by utilizing bolting or introducing alternate load paths within the member (i.e. the use of a twin welded plate I-girder for a pier cap in lieu of a single welded plate box girder).
- Incorporating a robust QA/QC of the bridge design to identify and remove any errors and mistakes in the design and design details.
- Training bridge designers on the features of FC bridge elements and expected outcomes of design decisions with FCMs.
- Incorporating features into the design details that facilitate in-service inspection of FCMs. These include such items as providing access doors to the inside of tub/box sections along with openings in diaphragms inside of tub/box members that are adequately sized for inspection personnel and equipment to pass through. Also, the insides of FC tub/box members are required to be painted white in the bridge plans and specifications which assist in finding fatigue-related cracks by highlighting cracking when coating flakes and making limited lighting more effective due to the lightened surface. Electrical outlets are also called for in design plans for tub/box members to provide lighting during inspection of the interiors.
- Providing bridge design plans that identify all FCMs in the bridge and requiring the bridge fabricator to adhere to the Fracture Control Plan outlined in the AWS/AASHTO Bridge Welding Code, D1.5.
- Providing plans that prohibit welds to FCMs during field erection.
- Consult with the Chief Structural Engineer or the Assistant Bridge Engineer before finalizing the design.