TABLE OF CONTENTS ~ GENERAL DESIGN

1 General Design
- 1.1 Overview
- 1.2 Definitions
- 1.3 Abbreviations and notation
- 1.4 References
  - 1.4.1 Direct
  - 1.4.2 Indirect
- 1.5 Americans with Disabilities Act
  - 1.5.1 Sidewalks, trails, and shared use paths
  - 1.5.2 Pedestrian overpasses
  - 1.5.3 Other bridge-related facilities
- 1.6 Buy America Provisions
- 1.7 Bridge layout
  - 1.7.1 Profile grade line
  - 1.7.2 Slope
  - 1.7.3 Spiral curve
- 1.8 Bridge plan preparation
  - 1.8.1 Title sheet
    - 1.8.1.1 Engineers seals
    - 1.8.1.2 Traffic data
  - 1.8.2 First sheet
    - 1.8.2.1 Bid items and quantities
    - 1.8.2.2 General notes
  - 1.8.3 Situation plan
  - 1.8.4 Staking diagram
  - 1.8.5 Substructure general
  - 1.8.6 Pier details
  - 1.8.7 Abutment details
  - 1.8.8 Superstructure general
    - 1.8.8.1 CWPG
    - 1.8.8.2 PPCB
  - 1.8.9 Repair/overlay details
  - 1.8.10 Miscellaneous details
    - 1.8.10.1 Barrier rails
    - 1.8.10.2 Expansion devices
    - 1.8.10.3 Subdrains
    - 1.8.10.4 Slope protection
    - 1.8.10.5 Lighting
    - 1.8.10.6 Approach sidewalk
    - 1.8.10.7 Other
  - 1.8.11 Aesthetics
  - 1.8.12 Soils sheets
  - 1.8.13 Roadway plans
  - 1.8.14 Signed standard plans
- 1.9 Culvert plan preparation
  - 1.9.1 Title sheet
  - 1.9.2 First sheet
  - 1.9.3 Situation plan
  - 1.9.4 Repair/extension project details
  - 1.9.5 Reinforced concrete
  - 1.9.6 Roadway plans
  - 1.9.7 Signed standard plans
- 1.10 Sign structure and other plan preparation
- 1.11 Quality Control/Quality Assurance plan

1.11.1 Design team
1.11.2 Plan preparation tools
1.11.3 Quality control
1.11.3.1 Designer
1.11.3.2 Design technician
1.11.3.3 Checker
1.11.4 Project documentation
1.11.5 Quality assurance
1.11.6 Post-letting involvement
1.12 Cost estimates
1.13 Software
1.14 Plan turn-in
1.14.1 Non-contract E-file submittals
1.14.2 Plan coordination
1.14.3 Prior to plan turn-in
1.15 Plan changes
1.16 Plan revisions
1.17 Shop drawings
1.18 Local Systems Review

1 General Design

1.1 Overview

The Office of Bridges and Structures (OBS) follows established Iowa Department of Transportation (Iowa DOT) practices, and on design and repair projects the office works closely with the Office of Design and Office of Contracts, as well as other offices. Bridges, culverts, sign structures, and other transportation structures are designed either by the office or by engineering consultants, which are reviewed by the office. To accommodate both groups of designers, many of the office practices and resources have been placed on the office web site (http://www.iowadot.gov/bridge/index.htm). Other resources for designers in the office are available on the Iowa DOT W-drive. Complete details of the resources will not be repeated in this Bridge Design Manual section.

Bridge and culvert designs generally progress from concept to preliminary design to final (or detail) design to contract. Generally projects are packaged for contract letting as road, bridge, or separate. For a road project the Office of Design has the lead and incorporates plan sheets from the Office of Bridges and Structures and other offices into its plans. For a bridge project the reverse is true. For a separate project both the Office of Design and the Office of Bridges and Structures develop separate design plans. Even when projects are developed separately, however, the Office of Contracts may tie them together in a single contract.

Project plans at the Iowa DOT are produced in MicroStation software by design technicians as well as engineers. Plan production is aided by seed files for typical plan sheets, working standard drawings, and signed standard plans for several bridge, culvert, and sign support structure types, all of which are available on the office web site. Both preliminary and final design software developed by the office also is available on the web site and on the W-drive. Specific design and detail policies are covered either in this Bridge Design Manual or in culvert and bridge checklists on the web site.

The office has had a long-standing policy of checking in-house new bridge designs, and that policy now has been broadened and formalized in the Quality Control/Quality Assurance Plan [BDM 1.11]. A similar plan for bridge engineering consultants has been written into “Conducting Business with the IA DOT Office of Bridges & Structures” [BDM 1.4].

It is expected that most projects will be completed without need for revision. However, necessary revisions can be accommodated during the contract letting process.

1.2 Definitions

Article refers to any numbered subdivision within a section of a direct reference such as *AASHTO LRFD Bridge Design Specifications, Bridge Design Manual,* or *Standard Specifications for Highway and Bridge Construction*. All of the following are articles: 1.1, 1.1.1, 1.1.1.1, and 1.1.1.1.1.

Average span length (ASL) is the average length of the two spans adjacent to a pier. See Figure 1.2-1.

Bridge length (BL) for structural design is the length from centerline of abutment bearing to centerline of abutment bearing. See Figure 1.2-1. In some situations bridge length may be taken as the length from expansion joint to expansion joint.

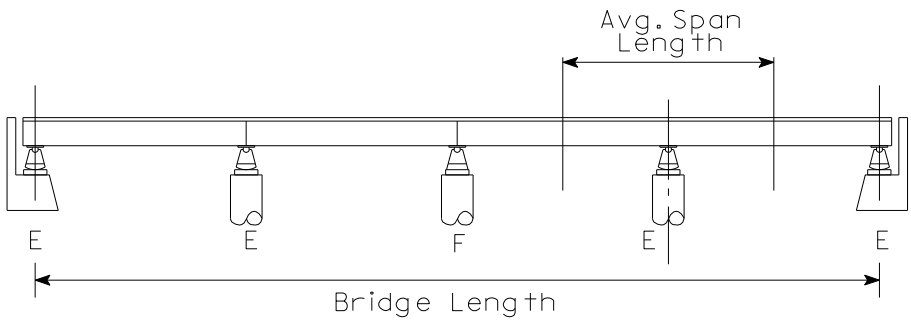

Figure notes:

- E indicates an expansion support.
- F indicates a fixed support.

Figure 1.2-1. Length definitions

Built-in wearing surface is taken as the top one-half inch (13 mm) of the original bridge deck. Weight of the built-in wearing surface is considered part of DC1, non-composite dead load of structural components and nonstructural attachments, [AASHTO-LRFD 3.3.2] (or Dead Load 1 under the AASHTO Standard Specifications), but the wearing surface is not considered to contribute to the strength or stiffness of any part of the superstructure.

Dead Load 1 is a designation for non-composite dead load that the office used with the AASHTO Standard Specifications. Under LRFD the office designates Dead Load 1 as DC1, non-composite dead load of structural components and nonstructural attachments [AASHTO-LRFD 3.3.2], which typically includes beams, deck, haunches, and diaphragms. It is applied to the beams *before* the deck concrete cures.

Dead Load 2 is a designation for composite dead load that the office used with the AASHTO Standard Specifications. Under LRFD the office designates Dead Load 2 as either DC2 or DW based on the AASHTO definitions [AASHTO-LRFD 3.3.2]. DC2 is composite dead load of structural components and nonstructural attachments including barrier rails, sidewalks, curbs, and medians that are not part of the initial deck pour. It is applied to the composite beams *after* the deck concrete cures. Curing of the concrete deck changes the load-carrying behavior of the superstructure by making the deck composite with beams. Parts of DC2 are applied differently depending on design conditions. Under LRFD, future wearing surfaces and utility lines, which formerly were part of Dead Load 2, are in a new load designation, DW [AASHTO-LRFD 3.3.2].

File includes hard copy information in the physical envelope and electronic information in the project directory. References to file in this section of the Bridge Design Manual will be refined in the future.

Future wearing surface (FWS) is a concrete or hot mix asphalt overlay applied to the original bridge deck. Office practice is to consider the future wearing surface part of DW under the AASHTO LRFD Specifications (or Dead Load 2 under the AASHTO Standard Specifications) at 0.020 ksf (960 Pa) but to neglect any potential contribution of the overlay to strength or stiffness of the superstructure.

H-series is a set of standard plans for pretensioned prestressed concrete beam (PPCB) bridges of specified roadway width.

J-series is a set of standard plans for continuous concrete slab (CCS) bridges of specified roadway width.

Longitudinal is the direction associated with the roadway centerline of construction and main girders. See Figure 1.2-2.

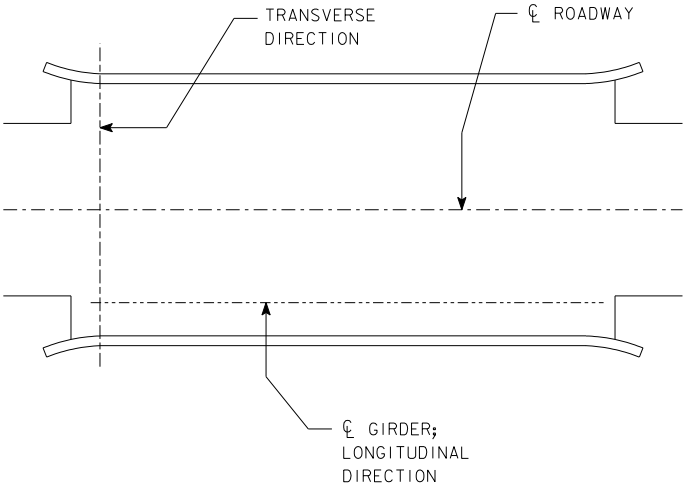

Figure 1.2-2. Longitudinal and transverse direction definitions

National Highway System (NHS) is composed of the following subsystems:

- Interstate,
- Other Principal Arterials,
- Strategic Highway Network (STRAHNET),
- Major Strategic Highway Network Connectors, and
- Intermodal Connectors.

Iowa state and city NHS maps are available from the NHS web site at the following URL.

http://www.fhwa.dot.gov/planning/national_highway_system

Natural ground elevation is the average natural ground elevation along the longitudinal centerline of the foundation.

Office refers to the Office of Bridges and Structures, Iowa Department of Transportation.

Primary Highway System: "Primary roads" or "primary road system" means those roads and streets both inside and outside the boundaries of municipalities which are under department (defined as state department of transportation) jurisdiction [Iowa Code 306.3.6].

Quality Assurance is an overall review performed and documented by the Transportation Engineer Manager (typically the supervising Section Leader) during a bridge design.

Quality Control is the process of checking accuracy of computations, plans, and other design documents to ensure that a bridge design is free of errors and omissions. Quality control is the responsibility of the designer, design technician, and checker.

RS-series is a set of standard plans for rolled steel beam (RSB) bridges of specified roadway width.

Section refers to a chapter or division of a direct reference such as *AASHTO LRFD Bridge Design Specifications, Bridge Design Manual,* or *Standard Specifications for Highway and Bridge Construction*. The following are examples of sections: 1. 2. and 3.

Section Leader is the supervisor of the Office of Bridges and Structures preliminary bridge section, detail design section, or consultant coordination section.

Substructure is any construction below the bearing seats or, in the absence of bearings, below the soffit of the superstructure.

Transverse is the direction normal to the roadway centerline of construction and main girders. See Figure 1.2-2.

1.3 Abbreviations and notation

ASL, average span length
BARS, Bridge Analysis and Rating System
BL, bridge length
BRIS, Bridge Information System
CCS, continuous concrete slab
CPRC, Culvert Plan Review Checklist
CWPG, continuous welded plate girder
D, dead load, including DC1, DC2, and DW
DC1, non-composite dead load of structural components and nonstructural attachments such as beams, deck, haunches, and diaphragms [AASHTO-LRFD 3.3.2]. Before LRFD the office termed this load Dead Load 1.
DC2, composite dead load of structural components and nonstructural attachments such as barrier rails, sidewalks, curbs, and medians that are not part of the initial deck pour [AASHTO-LRFD 3.3.2]. Before LRFD the office considered these loads part of Dead Load 2.
DGN or **dgn,** file type for MicroStation files
DW, dead load of wearing surfaces and utilities [AASHTO-LRFD 3.3.2]. Before LRFD the office included these loads in Dead Load 2.
EOR, engineer of record
FHWA, Federal Highway Administration
Form 220008, Bridge Inventory Report Form (formerly Form 107)
FWS, future wearing surface
I, live load impact [AASHTO-I 3.8]
IM, dynamic load allowance [AASHTO-LRFD 3.6.2]
L, live load, HS20 (MS-18) truck load or lane load, whichever has greater effect; military load, if applicable [AASHTO-I 3.7]
LARS, Load Analysis and Rating System
LL, live load, HL-93 [AASHTO-LRFD 3.6.1]
LRFD, load and resistance factor design
N or N-value, standard penetration test number of blows per foot (300 mm). N also may be given as **SPT NO**, the Standard Penetration Number, in the soils information chart reference.
NHS, National Highway System
OBS, Office of Bridges and Structures
PIN, project identification number
POI, point of intersection of pavement surface cross slopes that defines the profile grade location

PPCB, pretensioned prestressed concrete beam
PRC, Plan Review Checklist
PRCN, Plan Review Checklist Notes
PSS, Project Scheduling System
QA, quality assurance
QC, quality control
QM-A, Quality Management - Asphalt
RCBC, reinforced concrete box culvert
RSB, rolled steel beam
SIIMS, Structure Inventory and Inspection Management System
TEM, Transportation Engineer Manager (usually the supervising Section Leader)
TS&L, type, size, and location
URL, Uniform Resource Locator

1.4 References

1.4.1 Direct

Throughout *Bridge Design Manual* there are frequent, direct references to specific portions of standards, publications, and update memos. Direct references are included in brackets [ ] using the abbreviations given below. Applicable references to the AASHTO LRFD Specifications and, in a few cases, to the Standard Specifications are given with each article heading.

Although the latest editions are listed below there are some circumstances in which documents referenced in this manual have been prepared on the basis of previous editions.

[AASHTO-division article, table, or figure] refers to AASHTO *Standard Specifications for Highway Bridges, 17th Edition (2002)* with current errata changes - design, seismic design, or construction division with article, table, or figure number.

[AASHTO-LRFD article, table, or figure] refers to *AASHTO LRFD Bridge Design Specifications, 7th Edition (2014)* with article, table, or figure number.

[AASHTO-Temp article, table, or figure] refers to *Guide Design Specification for Bridge Temporary Works* with article, table, or figure number.

[AASHTO-Sign article, table, or figure] refers to AASHTO *Standard Specifications for Structural Supports for Highway Signs, Luminaires, and Traffic Signals, 5th Edition 2009* with article, table, or figure number.

[BDM article, table, figure, or note] refers to *LRFD Bridge Design Manual* with article, table, figure, or plan note number. (Available on the Internet at http://www.iowadot.gov/bridge/manuallrfd.htm)

[IDOT DS-number] refers to an Iowa Department of Transportation developmental specification, which is a hybrid of a supplemental specification and special provision.

[IDOT PPM policy number] refers to a policy in the Iowa Department of Transportation *Policies and Procedures Manual.*

[IDOT SS article] refers to Iowa Department of Transportation *Standard Specifications for Highway and Bridge Construction, Series 2009* with article number. (Available on the Internet at: http://www.iowadot.gov/erl/index.html)

[OBS MM No. number] refers to a policy-update, methods memo issued by the Office of Bridges and Structures, Highway Division with memo number, dated 2001 or later. (Available in the archive on the Internet)

[OBS SS sheet number] refers to an Office of Bridges and Structures, Highway Division "Standard Sheet" with sheet number. (Available on the Internet at: http://www.iowadot.gov/bridge/v8ebrgstd.htm)

[OD DM article, table, or figure] refers to the Office of Design, Highway Division *Design Manual* with article, table, or figure number. (Available on the Internet at: http://www.iowadot.gov/design/dmanual/manual.html?reload)

[OD RDD sheet number] refers to the Office of Design, Highway Division "Road Design Details" with sheet number. Formerly the detail manual was referred to as the "green book." (Available on the Internet at: http://www.iowadot.gov/design/desdet.htm)

[OD SRP sheet number] refers to an Office of Design, Highway Division "Standard Road Plan" with sheet number. Formerly the plan manual was referred to as the "red book." (Available on the Internet at: http://www.iowadot.gov/design/stdrdpln.htm)

[OM IM number] refers to Office of Materials, Iowa Department of Transportation Instructional Memorandum number. (Available on the Internet at: http://www.iowadot.gov/erl/current/IM/Navigation.nav.pdf)

1.4.2 Indirect

Indirect references are general and infrequent sources of information for *Bridge Design Manual* that usually are not linked with specific article or section numbers. The list below is not complete; see major articles for applicable complete lists.

American Association of State Highway and Transportation Officials (AASHTO). *Manual for Bridge Evaluation, First Edition.* Washington: AASHTO, 2008.

American Concrete Institute (ACI). *Building Code Requirements for Structural Concrete (ACI 318-02) and Commentary (ACI 318R-02).* Farmington Hills: ACI, 2002.

American Institute of Steel Construction (AISC). *Steel Construction Manual, Thirteenth Edition.* Chicago: AISC, 2005.

American Railway Engineering and Maintenance-of-Way Association (AREMA). *Manual for Railway Engineering—2002 Edition*. Landover: AREMA, 2002.

American Society for Testing and Materials (ASTM). *2001 Annual Book of ASTM Standards*. West Conshohocken: ASTM, 2001.

American Welding Society (AWS). *Bridge Welding Code, AWS D1.5-2002* with 2003 interim revision. Miami: AWS, 2002.

Dirks, Kermit and Patrick Kam. *Foundation Soils Information Chart, Pile Foundation*. Ames: Iowa Department of Transportation, Office of Road Design, January 1989/September 1994.

Greimann, L.F., R.E. Abendroth, D.E. Johnson, and P.B. Ebner. *Final Report, Pile Design and Tests for Integral Abutment Bridges, HR-273, and Addendum.* Ames: Iowa Department of Transportation and College of Engineering, Iowa State University, 1987.

Lundquist, William A. *Iowa DOT Bridge Design Office Metric Handbook.* Ames: Office of Bridges and Structures, 1994 updated through 1996.

National Steel Bridge Alliance (NSBA). *Highway Structures Design Handbook.* Chicago: NSBA, 1993.

Office of Bridges and Structures. *Conducting Business with the IA DOT Office of Bridges & Structures.* Ames: Office of Bridges and Structures, 2010. (Available on the Internet at: http://www.iowadot.gov/bridge/policy/ConductingBusinessWithIADOT.pdf)

Office of Bridges and Structures, *Bridge and Culvert Plan Checklists*. (Available on the Internet at: http://www.iowadot.gov/bridge/checklist.htm)

Office of Construction. *Construction Manual.* Ames: Office of Construction, Iowa Department of Transportation, 2006. (Available on the Internet at: http://www.iowadot.gov/erl/current/CM/Navigation/nav.pdf)

Precast/Prestressed Concrete Institute (PCI). *Bridge Design Manual.* Chicago: PCI, 1997 with revisions through 2004. (Available on the Internet at: http://www.pci.org/publications/bridge/)

Sunday, Wayne and Kyle Frame. *New Bridge Construction Handbook.* Ames: Office of Construction, Iowa Department of Transportation, 2000. (Available on the Internet at: http://www.iowadot.gov/construction/structures/bridge_construction_handbook.pdf)

1.5 Americans with Disabilities Act

The Iowa Department of Transportation (Iowa DOT) intends to comply with the Americans with Disabilities Act (ADA), and the Office of Design has developed specific guidelines based on “Proposed Guidelines for Public Rights of Way” (PROWAG) of 2011 and “Americans with Disabilities Act Accessibility Guidelines” (ADAAG) of 2010. The Office of Design guidelines are in Chapter 12 of the Design Manual [OD DM 12A, 12B, and 12C], and more may be added in the future. The guidelines affect all new transportation facilities, and the Iowa DOT is developing a transition plan for existing facilities on state rights-of-way.

Because of the law and enforcement the guidelines are absolute and not subject to engineering judgment. Construction tolerances must be accommodated on the high side of a minimum and on the low side of a maximum. For example, the Office of Design has chosen to specify a target sidewalk cross slope of 1.5% to accommodate construction tolerances on the low side of the PROWAG 2% maximum.

For alteration of existing facilities there may be allowance for practicality when it is impossible to meet all guidelines. The designer shall discuss all exceptions with the Methods Section of the Office of Design.

At this time the Office of Design requires bridges with “pedestrian access” to have ADA compliant facilities [OD DM 12C-1]. “Pedestrian access” includes sidewalks, trails, and shared use paths. Although it is clear that ADA affects the design of new bridges, the Office of Design also recommends ADA upgrades outside project limits [OD DM 12C-1]. In some cases this could involve a bridge near road repairs when the bridge otherwise would not be included in the project.

Generally it appears that complying with ADA in design of bridges with pedestrian facilities will involve maintaining minimum width, providing a slip-resistant walking surface, providing a surface with a maximum cross slope of 2%, bridging all joints that may be wider than ½ inch (13 mm), beveling all vertical surface discontinuities more than ¼ inch (6.4 mm), and limiting all vertical surface discontinuities to ½ inch (13 mm). For unusual situations on or under bridges requiring curb ramps, detectable warning surfaces, and other special accommodations the designer shall consult with the Methods Section of the Office of Design.

1.5.1 Sidewalks, trails, and shared use paths

At this time the Office of Design has prepared guidelines for sidewalks and shared use paths [OD DM 12A-2, 12B-2]. Trails generally are defined as recreational facilities rather than transportation facilities, and the usual standards for trails may not meet the ADA [OD DM 12B-1]. The bridge designer shall consult with the Methods Section in the Office of Design for the latest standards for trails.

The following guidelines apply to a sidewalk on a bridge and, in a few cases, are slightly different from the Office of Design's guidelines for a sidewalk beyond a bridge deck.

- Minimum width for a sidewalk shall be 5 feet (1.5 m). This width shall be clear of all obstructions at all elevations less than 6.7 feet (2 m) above the sidewalk surface. Although the PROWAG guidelines state a minimum width of 4 feet (1.2 m), at a width of less than 5 feet (1.5 m) passing zones are required, which would require a wider bridge deck at the zones. It is simpler for bridge design to provide a constant 5-foot (1.5 m) width. Exceptions need to be discussed with the Methods Section in the Office of Design.

- Maximum cross slope shall be 2%. Although the Office of Design uses a target 1.5% slope, bridge sidewalks generally are constructed more accurately than sidewalks on grade. Drainage is a concern, and the designer should be alert to situations that would cause ponding of water. The plan note needs to be worded carefully so that the contractor provides adequate drainage slope but does not exceed a 2% cross slope.

- Because a bridge sidewalk will be contained within the highway right-of-way, sidewalk grade in the direction of travel may follow but not exceed the roadway grade.

- The sidewalk surface shall be firm, stable, and slip resistant. Generally the Iowa DOT standard specifications for a burlap drag or broom texture on concrete sidewalks should meet this requirement [IDOT SS 2511.03, C, 3]. In cases where steel plates are used to bridge deck joints the designer shall specify galvanized floor plate with raised figures (ASTM A786/A786M), also known as checker or diamond plate.

- Galvanized steel floor plate shall be used to bridge all joints greater than ½ inch (13 mm) wide in the direction of travel. For movable joints the plate shall be attached to one side with recessed anchor screws flush with the riding surface of the plate.

- Elevation discontinuities, such as floor plate, shall be limited to ½ inch (13 mm). Elevation discontinuities between ¼ inch (6.4 mm) and ½ inch (13 mm) shall be beveled with a slope not steeper than 1:2, vertical to horizontal, and the bevel shall be applied to the entire vertical discontinuity.

- If a sidewalk is provided at the elevation of the bridge deck, the sidewalk shall be separated from the roadway with a separation barrier [BDM 5.8.1.2.4]. If a sidewalk is elevated from the bridge deck with a curb no sidewalk edge protection at the curb is required.

1.5.2 Pedestrian overpasses

A bridge designed for pedestrian access only shall meet the guidelines stated above [BDM 1.5.1] and, in addition, shall have a maximum grade of 5%. See also the Preliminary section in this manual for guidelines specific to pedestrian overpasses [BDM 3.2.5]. Because the connecting facilities need to fit the overpass, the designer shall consult with the Methods Section of the Office of Design.

1.5.3 Other bridge-related facilities

Pedestrian underpasses and other bridge-related facilities shall meet the guidelines stated above [BDM 1.5.1] and, in addition, shall have a maximum grade of 5%. See also the Preliminary section in this manual for guidelines specific to pedestrian underpasses [BDM 3.2.5]. Because the connecting facilities need to fit the underpass or other facility, the designer shall consult with the Methods Section of the Office of Design.

The elevation guidelines for sidewalks listed above, when applied to cast-in-place box culvert underpasses, will require that the culvert floor be flat, without frost trough. Because floor joints between precast box culvert sections are likely to exceed ½ inch in the direction of travel, precast culverts shall not

be used for pedestrian underpasses unless the joints are bridged. Providing the necessary slip-resistant floor surface also may be difficult in precast culverts.

1.6 Buy America Provisions

In general all manufactured products of iron, steel, or which have a coating of steel must be of domestic origin and shall be melted and manufactured in the U.S. For the specific requirements of the Buy America Provisions, see IDOT SS 1107.06, B and OM IM 107.

A couple of recent projects (2014) included handrails and pile uplift anchors manufactured from channel sizes of up to 10 inches. Smaller size channels are not always readily available in the U.S. For these smaller size channels the designer should specify equivalent bent plates.

1.7 Bridge layout

1.7.1 Profile grade line

When the profile grade line is defined at the centerline of approach roadway it is necessary to consider the transition between the template of the approach roadway and the crown template of the bridge deck. The Office of Design defines the profile grade to be the point of intersection (POI) between the pavement surface cross slopes as shown in Figure 1.7.1. The deck elevation at the bridge deck crown will be below the POI to account for the rounding of the bridge deck with a parabolic template.

The rounding of the approach roadway surface is not as well defined as the parabolic template established for the bridge deck crown, however some rounding of the roadway surface at the cross slope intercepts is typical during pavement placement and will match reasonably close to the template shown for the bridge deck crown.

The designer shall establish bridge deck elevations using Figure 1.7.1 and the appropriate ‘X’ value from Table 1.7.1. Typically the crown template with the appropriate inserted ‘X’ and slope values should be shown on the Top of Slab Elevations sheet.

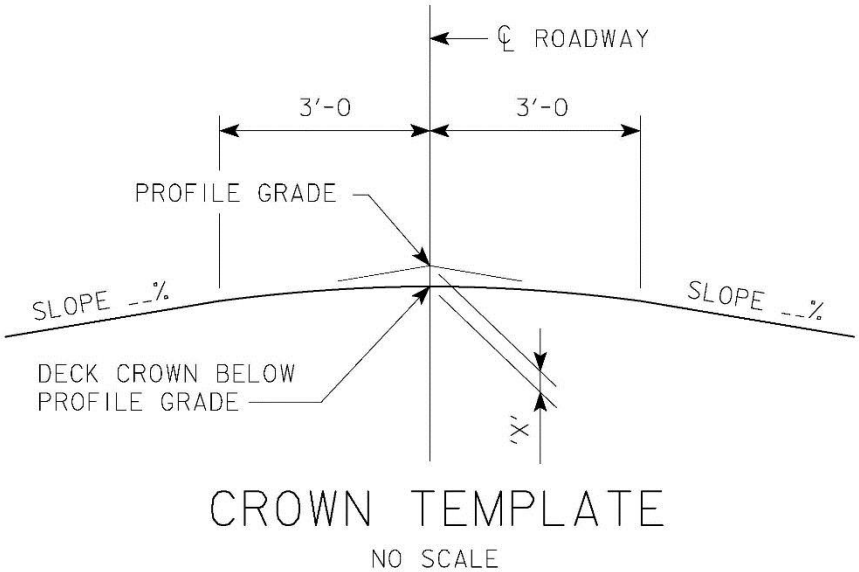

Figure 1.7.1. Crown template with profile grade

Table 1.7.1. Recommended values for 'X' in Figure 1.7.1

Slope, %	'X', feet
2.0	0.03
2.5	0.04
3.0	0.05

Using this method will ensure the approach roadway surface in the travelled lanes and the outside edge of pavement will match the bridge deck elevations. Elevations shown on the longitudinal section of the situation plan sheet (or TS&L) will reflect the top of bridge deck crown elevations along the centerline of approach roadway to the nearest hundredth of a foot (3 mm). These elevations shall be noted on the situation plan sheet with the correct 'X' value inserted as follows:

TOP OF BRIDGE DECK CROWN 'X' FEET BELOW PROFILE GRADE.

1.7.2 Slope

Bridges on steeper grades require additional consideration from designers:

- Horizontal versus along grade dimensioning with respect to span and beam lengths.
- The effect of deck and end beam slope on the detailing of expansion joints.
- Clearance between the bottom flange of beams and the edge of abutment footings or pier caps.
- Bearing details for tapered and curved sole plates.

Designers also need to consider the tendency of bridges with steeper downward slope over the entire length of the bridge to creep downhill over time. In order to prevent this movement, consideration should be given to fixing multiple piers and using integral or semi-integral abutments at least on the low end of the bridge.

When the difference between the horizontal length and the profile grade length for any span within a PPCB bridge is greater than 1/2 inch (13 mm) follow the guidelines below.

Bridge stationing shall be measured along the horizontal from centerline to centerline of bearings (vertical), but individual spans and bridge length are to be measured along the grade from the centerline to centerline of bearings (normal to grade) based on standard beam lengths as indicated in Figure 1.7.2-1.

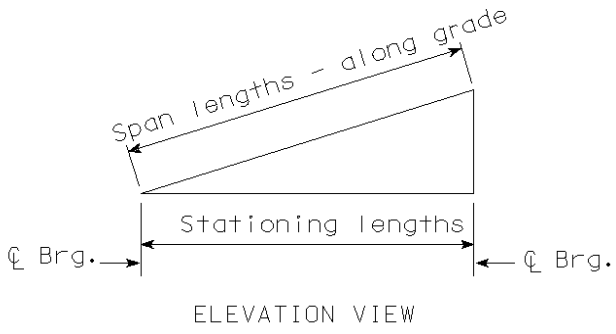

Figure 1.7.2-1. Dimensioning of stationing and span lengths

The situation plan should dimension the horizontal lengths of the bridge, centerline to centerline of abutment bearings and centerline to centerline of spans, and the corresponding stations. The plan should also include the dimension lengths from centerline to centerline of abutment bearings and face to face of paving notches for the lengths along the profile grade. Label these lengths "Horizontal" and "Along

Grade". All other applicable plan lengths should be labeled accordingly. Although the span lengths based on profile grade chords will be known approximately during preliminary design, the final designer may need to adjust the lengths slightly depending on camber.

Include in the plans a partial longitudinal section showing centerline of abutment bearing vertical and centerline of bearing normal to grade as shown in Figure 1.7.2-2.

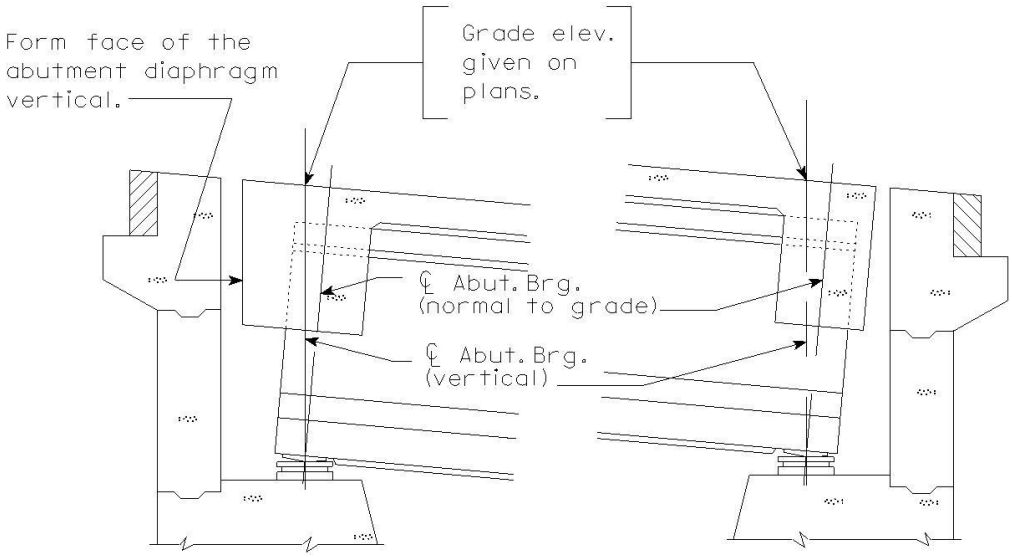

Figure 1.7.2-2. Partial longitudinal section along centerline of roadway at abutments, with grade variations

If there is an expansion joint at a pier, include a partial longitudinal section at the pier, showing centerline of beam bearings vertical and normal to grade as in Figure 1.7.2-3.

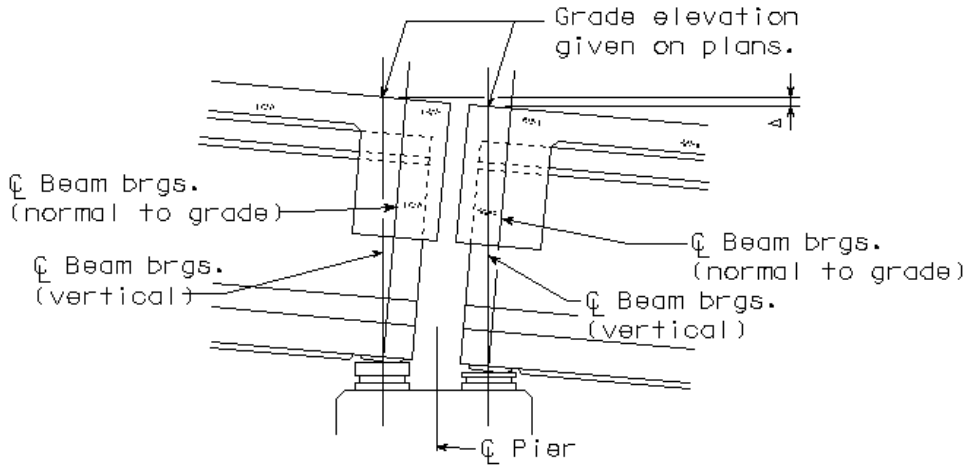

Figure 1.7.2-3. Partial longitudinal section along centerline of roadway at pier, with grade variations

If the change in elevation from the front of the backwall to the centerline of abutment bearing (vertical) or front to back of backwall is greater than 1/8 inch (3 mm) show the dimension as in Figure 1.7.2-4.

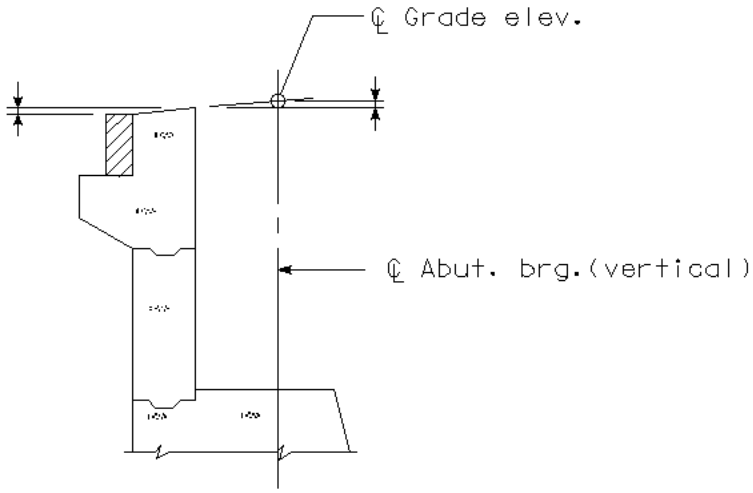

Figure 1.7.2-4. Partial section through abutment

1.7.3 Spiral curve

In order to minimize complicated bridge geometry, the Office of Design will avoid using spiral curves on bridges [BDM 3.2.6.3.1]. For the unusual case in which the designer needs spiral curve information, it is given in Figure 1.7.3.

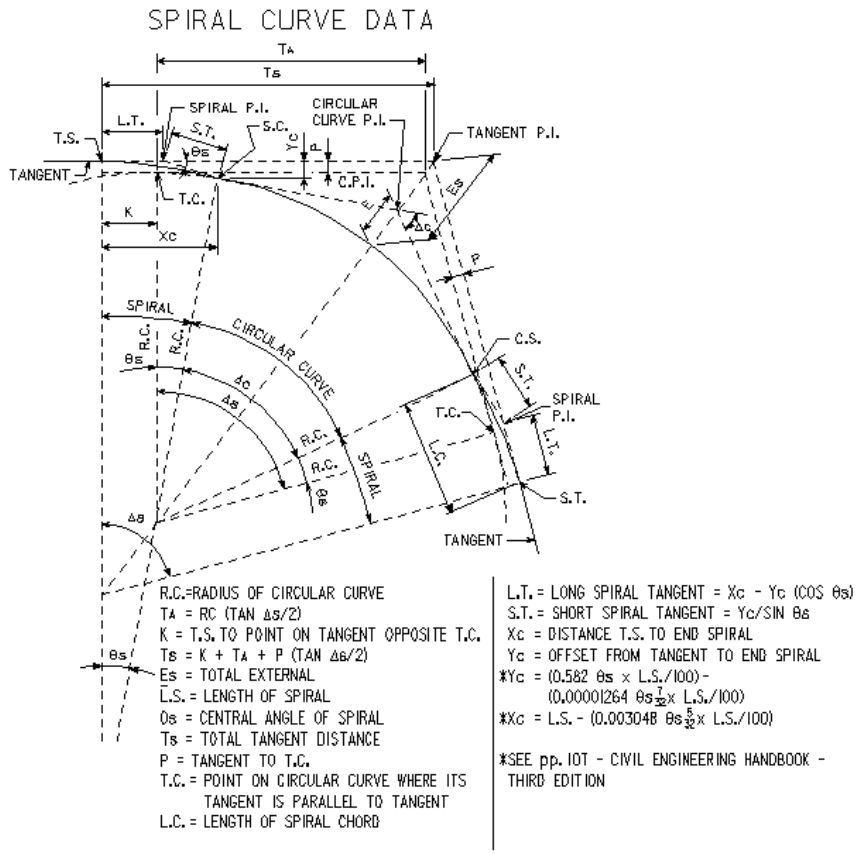

Figure 1.7.3. Spiral curve information

1.8 Bridge plan preparation

Although plans for a bridge are prepared by the Office of Bridges and Structures or consultants to the office, the plans must be coordinated with other offices associated with the project. The bridge will be part of a highway project and thus the bridge plans must fit with plans prepared by the Office of Design or consultants to that office. The flow chart from concept to contract letting for a typical bridge replacement project is given in Section 1D-1 of the Office of Design's Design Manual (available on the Internet at: http://www.iowadot.gov/design/dmanual/manual.html). When complete the bridge plans are turned-in to the Office of Contracts and must meet its requirements.

When starting a plan set for a project the design technician or designer should read and follow the document "Procedure for Beginning V8Projects", which is accessible from the Projects link on the V8 Bridge Documentation web page (http://www.iowadot.gov/bridge/v8docs.htm).

Bridge plans follow standard formats established with MicroStation V8 seed files (available on the Internet at http://www.iowadot.gov/bridge/v8tools.htm). Additional resources available on the same V8 Bridge Tools page are the following:

- Cell libraries,
- DGN libraries,
- Font resources, and
- Color tables.

Also, on the V8 Bridge Documentation page (http://www.iowadot.gov/bridge/v8docs.htm) instructions and discussions for the following items are available:

- Seed files,
- Models,
- Levels,
- Revisions,
- Scaled details,
- Standards, and
- Modifications.

Many of the detailed items on bridge plans, such as title block and location map, are covered in the following documents on the Bridge and Culvert Plan Checklist page (http://www.iowadot.gov/bridge/checklist.htm):

- Plan Review Checklist (PRC) and
- Plan Review Checklist-Notes (PRCN).

For plans in general see PRC and PRCN: 1. General – All Projects.

Generally bridge plans are organized in the sequence indicated in the subarticles that follow.

1.8.1 Title sheet

See also Plan Review Checklist (PRC): 2. Title Sheet – All Projects.

1.8.1.1 Engineers seals

An index of seals is required on the title sheet for each project plan set. For each design type included in the project, such as structural, hydraulic, geotechnical, and roadway, the sheet number containing the seal and designer are listed in the index. When the project is prepared by the Office of Bridges and Structures, the title sheet shall contain the seal-certification-signature blocks for the responsible structural and hydraulic designers. The responsible designers are defined in Table 1.8.1.1.

Table 1.8.1.1. Designers responsible for sealing structural and hydraulic designs

Design type	Seals to be placed on title sheet	
	Designer licensed as Professional Engineer	**Designer not licensed**
Structural	Designer's seal	Supervising detail design section leader's seal
Hydraulic	Designer's seal	Preliminary bridge section leader's seal

For projects that include signed standard plans (J-series, H-series, RS series, single RCBC, twin RCBC, triple RCBC, flume box culvert, overhead sign truss, and roadside dynamic message sign support standards), the index of seals additionally shall include the Bridge Engineer's name for structural design of the standards. The index line should read "Bridge (or Culvert or Sign Support) Standards, Norman L. McDonald, and Structural Design." The line is included in the index of seals on the seed file for a bridge title sheet, and the designer will need to delete the line if it is inappropriate.

1.8.1.2 Traffic data

Traffic data shall be given on a situation plan sheet, and the data or a note regarding the data shall be given on the title sheet. If there is a single bridge design in a project, the traffic data is to be given on the title sheet but, if there are multiple designs, a note is to be given that refers to the individual situation plan sheets for the traffic information.

The traffic information on the bridge title sheet is labeled as "Design Data Rural" or "Design Data Urban", which matches the way the Office of Design labels its traffic information. On the situation plan sheet the traffic information is labeled as "Traffic Estimate" and contains the same traffic information as shown on the title sheet.

Both the traffic information blocks and the traffic note referring to individual situation plan sheets are given on the seed title sheet, and the designer should delete the inappropriate items.

1.8.2 First sheet

See also Plan Review Checklist (PRC) and Plan Review Checklist Notes (PRCN): 3. First Sheet of Design – All Projects.

1.8.2.1 Bid items and quantities

Bid items and quantities in the table of Estimated Bridge Quantities on the first sheet are determined by the designer, with consideration of the guidelines below, and entered into the Project Scheduling System (PSS) when designed by the Office Bridges and Structures. The bid items are added to the first sheet with the BidItems application available in MicroStation. The Office of Contracts automatically receives the bid items to prepare the proposal.

The BIAS software available from the Consultant/Designer Resources page on the office web site is used by the consultants. The consultant should first export the BIAS bid item file as a file type that can be entered into the MicroStation first sheet. Later for plan turn-in, the designer should export the Trns*Port file, which the Office of Contracts then uses in the contract letting process.

The non-structural bid items listed below are added to the Estimate of Quantities in accordance with the following guidelines, which may involve the Offices of Design, Contracts, Local Systems, and Construction.

- Flaggers: The Office of Design will add this item when a Standard Road Plan or an Office of Design detail is referenced requiring it. Office of Design will input a quantity of one. The Office of Contracts will then determine the contract period and change the quantity accordingly.

- Pilot Cars: The Office of Design will add this item when a Standard Road Plan or an Office of Design detail is referenced requiring it. Office of Design will input a quantity of one. The Office of Contracts will then determine the contract period and change the quantity accordingly.

- Mobilization: The designer shall include this item in all projects. If the Offices of Design and Bridges and Structures have a combined project, the office creating the title sheet will add this item.

- Field Lab: The Office of Contracts will send Offices of Design and Local Systems a copy of its criteria for determining when a field lab is required on a project. Office of Design will add this item when it is required.

- Field Office: This item will be determined at the field exam. The Office of Design will add this item if it is necessary.

- Trainees: This item will only be included on state projects. The Office of Contracts will notify the designer 12 weeks before letting (2 weeks before turn-in) of the quantity if it is required. If the Offices of Design and Bridges and Structures have a combined project, the office creating the title sheet will add this item.

- Clearing & Grubbing: The field will send the quantity for this item directly to the designer. This includes area and/or count quantities. This information may be sent any time after field exam and prior to 12 weeks before letting.

- Construction Survey: The field should notify the designer when this item is required. The field must notify the designer prior to 12 weeks before letting. This item should always be added to

incentive/disincentive projects. The field must send a copy of the request to the Office of Construction.

- Quality Management - Asphalt (QM-A): The Office of Construction will notify the designer when this item is required.

The Excavation Classification Line elevation, which is used for calculating structural excavation quantities and sets the limits between Class 20 Excavation and Class 21 Excavation, shall be determined as follows.

(1) In the bridge envelope the designer should find Iowa DOT Form 621004 (Form 1-F) "Field Notes for Bridges and Large Culverts-Primary Road System". Item No. 7 on the form has the average low water elevation and average streambed elevation.
(2) Determine the elevation of the Excavation Classification Line as the higher of (a) the low water elevation and (b) the average stream bed elevation plus one foot (300 mm).

The method of measurement for structural excavation quantities may be found in IDOT SS 2402.04. The vertical plane boundary dimensions for Class 21 Excavation are not explicitly defined in the Specifications, but are to be indicated in the contract documents per IDOT SS 2402.04, A, 3. Designers shall ordinarily determine quantities for Class 21 Excavation based on the same vertical plane boundary dimensions used for Class 20 Excavation [e.g. IDOT SS 2402.04, B, 2]. The boundaries assumed for Class 21 Excavation shall be indicated in the contract documents, preferably by note in the Bid Item Estimate Reference Information.

1.8.2.2 General notes

Reserved.

1.8.3 Situation plan

See the information provided for preliminary designers in the Preliminary section [BDM 3.2.9] and see Plan Review Checklist (PRC): 4. Situation Plan.

1.8.4 Staking diagram

The designer shall provide a staking diagram for the following types of bridge projects:

- Dual bridges on interstate or other four-lane primary roads,
- Bridges with special widths for climbing lanes, sidewalks, or shared use paths,
- Tapered bridges,
- Other straight bridges for which "centerline of approach roadway" does not coincide with centerline of bridge roadway, and
- Bridges along curved alignments.

For straight bridges the "centerline of approach roadway" is the primary staking control. To avoid confusion, the centerline of bridge roadway shall not be shown on the staking plan. The designer should designate the bridge centerline as "centerline of bridge" and dimension the offset from "centerline of approach roadway". The designer may show the "centerline of profile grade" but shall not reference it to "centerline of approach roadway".

For horizontally curved bridges the primary control line is a chord baseline defined at each end by the intersection of the centerline of the abutment and centerline of approach roadway or approach baseline.

The staking diagram should show dimensions from "centerline survey" or "centerline approach roadway" to the following:

- Centerline of abutment footings and pier footings,
- Outside limits of abutment footings,
- Gutterline location at abutments, and
- Centerline of P10L pier locations.

The designer also shall show non-zero skew angles of abutments and piers.

See also Plan Review Checklist (PRC): 5. Staking Diagram – New Construction.

1.8.5 Substructure general

See Plan Review Checklist (PRC): 6. Substructure – General – New Construction.

1.8.6 Pier details

See the detailing information provided for final designers in the Piers section [BDM 6.6.4] and see Plan Review Checklist (PRC) and Plan Review Checklist Notes (PRCN): 7. Pier Details – New Construction.

1.8.7 Abutment details

See the detailing information provided for final designers in the Abutments section [BDM 6.5.4] and see Plan Review Checklist (PRC) and Plan Review Checklist Notes (PRCN): 8. Abutment Details – New Construction.

1.8.8 Superstructure general

See Plan Review Checklist (PRC) and Plan Review Checklist Notes (PRCN): 9. Superstructure Details – General – New Construction.

1.8.8.1 CWPG

See the detailing information provided for final designers in the Steel Girders and Beams section [BDM 5.5.2.4.2] and see Plan Review Checklist (PRC) and Plan Review Checklist Notes (PRCN): 10. Superstructure Details – CWPG – New Construction.

1.8.8.2 PPCB

See the detailing information provided for final designers in the Pretensioned Prestressed Concrete Beams section [BDM 5.4.1.4.2] and see Plan Review Checklist (PRC): 11. Superstructure Details – PPCB – New Construction.

~~At the request of the Office of Construction and Materials, an Excel spreadsheet entitled "PPC Beam Data Spreadsheet.xlsx" will be included in the letting. The spreadsheet will document design and field information related to PPCB camber and haunching. Design information is entered into the spreadsheet by the designer whereas the field information will be filled in by the Contractor and personnel from the Office of Construction and Materials. When all the information has been collected the Office of Construction and Materials will enter the information from the spreadsheet into the BRIS database.~~

~~1.8.11~~1.8.9 Repair/overlay details

See the information provided for final designers in the Bridge and Culvert Repair section [BDM 12.1.9.1] and see Plan Review Checklist (PRC) and Plan Review Checklist Notes (PRCN): 12. Details – Repair/Overlay Projects.

~~1.8.12~~1.8.10 Miscellaneous details

Reserved.

~~1.8.12.1~~1.8.10.1 Barrier rails

See the information provided for final designers in the Railings section [BDM 5.8.1] and see Plan Review Checklist (PRC): 13. Barrier Rail.

~~1.8.12.2~~1.8.10.2 Expansion devices

See the information provided for final designers in the Expansion Joints section [BDM 5.8.3] and see Plan Review Checklist (PRC): 14. Expansion Device.

~~1.8.12.3~~1.8.10.3 Subdrains

See Plan Review Checklist (PRC): 15 Subdrain/Slope Protection Details.

~~1.8.12.4~~1.8.10.4 Slope protection

See Plan Review Checklist (PRC): 15 Subdrain/Slope Protection Details.

~~1.8.12.5~~1.8.10.5 Lighting

See Plan Review Checklist (PRC): 16. Lighting Details.

~~1.8.12.6~~1.8.10.6 Approach sidewalk

See Plan Review Checklist (PRC): 18. Approach Sidewalk.

~~1.8.12.7~~1.8.10.7 Other

Reserved.

~~1.8.13~~1.8.11 Aesthetics

See Plan Review Checklist (PRC): 17. Aesthetics.

~~1.8.14~~1.8.12 Soils sheets

For bridge and culvert projects one or more soil profile sheets will be provided by the Soils Design Section, and any additional sheets should be placed in the plan set after the last structural design sheet.

~~1.8.15~~1.8.13 Roadway plans

For a typical bridge or culvert project one or more roadway sheets will be provided by the Office of Design. If needed the roadway sheets will include the traffic control plan. The first roadway sheet will have an engineer's seal-certification-signature block for the roadway design, and the sheet and any additional sheets should be placed in the plan set after the last geotechnical design sheet.

See also Plan Review Checklist (PRC): 19. Roadway Plans.

~~1.8.16~~1.8.14 Signed standard plans

Projects that include signed standard plans (J-series, H-series, RS-series, single RCBC, twin RCBC, triple RCBC, flume box culvert, overhead sign truss, and roadside dynamic message sign support standards), shall include the signed sheets, referenced on the Title Sheet in the English Standard Bridge Plans table, in a multi-page PDF file to a subfolder in the Contracts plan turn-in folder.

1.9 Culvert plan preparation

Although plans for a culvert are prepared by the Office Bridges and Structures or consultants to the office, the plans must be coordinated with other offices associated with the project. The culvert will be part of a highway project and thus the culvert plans must fit with plans prepared by the Office of Design or consultants to that office. When complete the culvert plans are turned-in to the Office of Contracts and must meet its requirements.

Culvert plans follow standard formats, and the design technician is required to start with MicroStation V8 seed files (available on the Internet at: http://www.iowadot.gov/bridge/v8tools.htm). Additional resources available on the same V8 Bridge Tools page are the following:

- Cell libraries,
- DGN libraries,
- Font resources, and
- Color tables.

Also, on the V8 Bridge Documentation page (http://www.iowadot.gov/bridge/v8docs.htm) instructions and discussions for the following items are available:

- Seed files,
- Models,
- Plats,
- Levels,
- Revisions,
- Scaled details,
- Projects,
- Standards, and
- Modifications.

Many of the detailed items on culvert plans, such as title block and location map, are covered in the Culvert Plan Review Checklist (CPRC) on the Bridge and Culvert Plan Checklist page (http://www.iowadot.gov/bridge/checklist.htm). For general plan items see CPRC: 1. General – All Projects.

Generally culvert plans are organized in the sequence indicated in the subarticles that follow.

1.9.1 Title sheet

See the discussions of engineers' seals and traffic data for bridge projects [BDM 1.8.1.1 and 1.8.1.2] and Culvert Plan Review Checklist (CPRC): 2. Title Sheet – All Projects.

1.9.2 First sheet

See the discussion of quantities [BDM 1.8.2.1] and Culvert Plan Review Checklist (CPRC): 3. First Sheet of Design – All Projects.

1.9.3 Situation plan

See Culvert Plan Review Checklist (CPRC): 4. Situation Plan.

1.9.4 Repair/extension project details

See Culvert Plan Review Checklist (CPRC): 5. Details – Repair/Extension Projects.

1.9.5 Reinforced concrete

See Culvert Plan Review Checklist (CPRC): 6. RCB Culverts.

1.9.6 Roadway plans

See Culvert Plan Review Checklist (CPRC): 7. Roadway Plans.

1.9.7 Signed standard plans

Projects that include signed standard plans (J-series, H-series, RS-series, single RCBC, twin RCBC, triple RCBC, flume box culvert, overhead sign truss, and roadside dynamic message sign support standards), shall include the signed sheets, referenced on the Title Sheet in the English Standard Culvert Plans table, in a multi-page PDF file to a subfolder in the Contracts plan turn-in folder.

1.10 Sign structure and other plan preparation

Reserved.

1.11 Quality Control/Quality Assurance plan

The Quality Control/Quality Assurance (QC/QA) Plan describes the methodology and procedures by which the Iowa DOT ensures in-house produced new bridge designs are in accordance with nationally recognized design policies, are independently checked, and are reviewed. The QC/QA Plan will document the checking and review process and produce a verifiable record [BDM 1.11.5, C1.11.5] to show that the QC/QA process was followed during the project. The QC/QA process enhances plan quality by doing the following:

- Providing uniformity and consistency in the development of plans,
- Ensuring compliance with Iowa DOT policies, procedures, and standards,
- Minimizing plan errors and discrepancies,
- Ensuring proper coordination between other partners in the design process,
- Minimizing plan changes after project is turned-in to the Office of Contracts, and
- Improving project constructability and bid ability.

1.11.1 Design team

The design team typically consists of a designer, design technician, checker, and Transportation Engineer Manager (TEM). The engineer of record (EOR) will be a licensed Professional Engineer in the State of Iowa and will sign the design plan documents. The preference would be to have the designer as the EOR; however, the EOR could be the designer, checker, or TEM depending on the makeup and qualifications of the team members. The design team makeup is at the discretion of the TEM based on project complexity, design elements, and use of pre-engineered standards. This discretion relates directly to the risk involved in errors associated with various aspects of the design plan.

1.11.2 Plan preparation tools

Design plans shall be developed in accordance with AASHTO LRFD Bridge Design Specifications and the Iowa DOT Bridge Design Manual (BDM). The BDM consists of standard design practices approved by the bridge engineering staff for use in design plan preparation. The BDM is maintained by the Methods Section and policy group who meet periodically to discuss design issues and document office policy for use by in-house staff and consultants. In addition the BDM provides a listing of notes, along with commentary, which can be incorporated into the final design plans.

Other items available to the designer and design technician to aid in the plan development are Standard Plan Sheets, Signed Standard Plans, and plan development check lists [BDM 1.8]. The designer must also be aware of the requirements documented in the Iowa DOT Standard Specifications for Highway and Bridge Construction, Developmental Specifications, Special Provisions, checklists, Design Manual developed by the Office of Design, Construction Manual developed by the Office of Construction, and the Instructional Memorandums (IM) developed by the Office of Materials.

Additionally the office maintains locally developed spreadsheets for use in design [BDM 1.13] and libraries and automation tools for use with MicroStation [BDM 1.8], and the office maintains licenses for commercial bridge design software packages [BDM 1.13].

1.11.3 Quality control

Quality control is the responsibility of the designer, design technician, and checker. These project team members shall use the tools noted above to develop a project design plan. Responsibility of each team member is listed below. Team members shall work independently to perform their roles and then communicate/discuss issues based on their understanding of the office policy in order to arrive at a mutually acceptable design. Discussions may involve the Bridge Engineer, Assistant Bridge Engineer, Chief Structural Engineer, Methods Engineer, Transportation Engineer Manager, or other key staff in the

bridge office. Resolution of design issues should be documented in the engineer's design calculations and checklists.

1.11.3.1 Designer

The designer will be responsible for development and assembly of the structure plans. This includes listening to the concerns of the design technician and checker involving perceived problems with the plans and making decisions as to the appropriateness of the concerns. If the designer is not the EOR, or the QA review identifies issues for resolution, the final decision could be made by others associated with the project. Steps in the project development process include:

- Verify the type, size, location, grade, and geometrics of the proposed structure in order to confirm correct clearances, span arrangements, and proposed structure type.
- Identify Standard Plan details and appropriate Signed Design Standards to be used in the design plan.
- Review the BDM and all related specifications pertaining to the type of structure being built.
- Design all structural components, or use appropriate standards and provide information concerning special details needed for the structure to adequately relay the conceived design to the detailer. Documentation of all computations including computer generated data shall be available for the file.
- Specify all components by size and material.
- Review all sheets submitted by other offices for inclusion into the final project plans.
- Finalize plans by verifying details and notes.

Optional information to be provided by the designer:

- Calculate all quantities. Documentation of all computations including computer generated data shall be available for the file.
- Provide sketches and notes needed for the proposed structure.
- Fill in all missing data on applicable Standard Plan sheets.

1.11.3.2 Design technician

The design technician will be responsible for verifying the application of proposed components of the plan. This includes bringing perceived errors and omissions to the attention of the designer and the following:

- Review the type, size, location, grade and geometrics of the proposed structure to understand the aspects of the project.
- Compile all necessary notes, Standard Design sheets, and additional special details needed to assemble a set of design plans.
- Detail the proposed structure by typing or importing any nonstandard notes, attaching the related standard notes, completing the Standard Design sheets, and adding additional special detail sheets as the project requires [BDM 1.8].
- Calculate or verify elevations. Calculate the rebar number, weights/mass, and lengths based on given splices or development lengths.

Optional information to be provided by the design technician:

- Develop the notes and special details needed to complete a set of design plans based on verbal communication from the designer.
- Calculate bid item quantities. Documentation will be available for the file.

1.11.3.3 Checker

The checker will be responsible for adequacy of all structural components and overall plan intent. This includes making the designer and design technician aware of perceived problems in the design plans and the following:

- Review the design plans for completeness, consistency, and constructability according to standard design, detailing, and construction practice.

- Review the BDM and all related specifications pertaining to the type of structure being built.
- Analyze all structural components to verify the proposed structure is properly designed. Analysis shall be performed independently of any design calculations prepared during the initial design. Original design assumptions can be supplied by the designer however the checker will make an independent decision concerning the validity of the design assumptions. Documentation of all computations including computer generated data shall be available for the file.
- Verify all components by size and material.
- Verify all notes and specifications.

Optional information to be provided by the checker:

- Calculate all bid item quantities. Documentation shall be available for the file.

1.11.4 Project documentation

Projects in the bridge office will typically be identified with a project file number, design number, project identification number (PIN), and a project number. These numbers will be assigned during the preliminary engineering process. The design file will be associated with the project file number. This file will contain the following information, as applicable:

- Project concept
- Structure type size and location (TS&L)
- Preliminary project cost
- Design calculations
- Bid item quantity calculations
- Environmental documentation
- FHWA clearances
- Project correspondence

The following checklists are provided for review of bridge and culvert designs prepared by consulting engineers and also are appropriate for checking office-prepared designs (available on the Internet at http://www.iowadot.gov/bridge/checklist.htm).

- Plan review checklist (PRC)
- Plan review checklist - notes (PRCN)
- Culvert plan review checklist (CPRC)

The EOR will be responsible for maintaining and submitting a complete project design file upon completion of the design process. This information along with the contract design plans and specifications will be submitted to the TEM for final review and submittal to the Office of Contracts for letting.

1.11.5 Quality assurance

Upon project assignment to the TEM for final design, the manager shall select a design team to prepare the final contract documentation for letting. The design team members will be assigned based on complexity of the project, member experience, and available staffing. The TEM will be responsible for mediating and resolving issues presented by team members for resolution. The TEM shall be made aware of and concur with all instances where the design deviates from approved office standards and policies.

Upon completion of the project and presentation to the TEM for submittal to the Office of Contracts for letting, the TEM shall review the file documentation for completeness and review the plans for overall conformance to bridge office policy. The project plans will then be distributed to other Iowa DOT offices, the appropriate district, and the FHWA (when required) for comment. Any comments received shall be reviewed with the EOR for necessary changes to the plan.

After the review process, the TEM will prepare the Quality Control/Quality Assurance Record [BDM C1.11.5] for inclusion in the project file. This record shall include the basic project information along with the signatures of the project designer, design technician, checker, and TEM.

The TEM shall then submit the final plans and specifications to the Office of Contracts. The project file documentation will be stored in the Office of Bridges and Structures until it is electronically scanned for permanent storage.

1.11.6 Post-letting involvement

After letting, a member of the design team will be responsible for the review on any working drawings required for the project [BDM 1.17]. In addition, any structural design issues will be directed to the design team by the Office of Construction for resolution.

On occasion, the design team members will conduct field reviews for observation and discussion of specific design/construction issues. Information gathered during these reviews that highlights inconsistencies with current bridge design policy will be documented and shared with the Bridge Methods Engineer for resolution of policy issues.

If revisions to the design plans are required after the letting due to a change in site conditions assumed in the design preparation or an error found in the original design plans, the design team will develop a formal revision to the design plans. Documentation of the revision shall be in accordance with current policy for issuing plan revisions. The EOR (if available) will be responsible for the revision documentation and placing it in the original design file. The TEM will be responsible for noting these revisions on the Quality Control/Quality Assurance Record in the design file. In addition, revision documentation will be sent to the FHWA when applicable.

1.12 Cost estimates

Final designers in the office and consulting designers shall prepare construction cost estimates as follows.

(1) Verification of preliminary bridge costs (B1 preliminary design cost estimate) based on concept information. For a project with a consultant engineer this verification is performed by the OBS Consultant Coordination Section.
(2) Concept (B0) Estimate - Cost estimate for projects where final design writes the project concept (e.g. overlays, MB and bridge repair projects).
(3) 50% Plans Estimate - Update bridge and large project ($500,000 or more) construction costs based on rough bid item quantities after completion of design and before final detailing and checking is complete.
(4) B3 or B4 Estimate - Update of design costs based on final bid item quantities prior to final plan turn-in.
(5) Annual Estimate - Upon request of the supervising Section Leader perform a cost estimate if the existing cost estimate is greater than 6 months old for project programming review purposes.

These estimates will be tracked in the Production Scheduling System (PSS).

B0 and B1 cost estimates are typically parametric costs estimates based on the design parameters (e.g. unit cost per square foot of deck area for a particular bridge type).

For 50% plans and B3 and B4 cost estimates the designer should use the cost estimate program available as follows.

- OBS engineer: W:\Highway\Bridge\DesignApplications\LRFD Official\ApplicationStorage\Costs\Prepare Cost Estimate using Project Scheduling
- Consultant engineer: “Iowa DOT Cost Estimate Program” from the final bridge design software page on the office web site

The designer shall report the cost estimates to the supervising Section Leader, who will compare each estimate with previous estimates in the Project Scheduling System.

1.13 Software

Some of the software used at the Iowa DOT during bridge and culvert design and plan preparation is available through the Automation Tools section of the Office of Bridges and Structures web site (http://www.iowadot.gov/bridge/index.htm#) The BRIS (Bridge Information System) application is available on office workstations through a network shortcut. Commercial software also is installed separately on workstations or available through a network shortcut under license agreements. Engineering consultants are responsible for downloading Iowa DOT software and obtaining licenses for commercial software as needed.

The Iowa DOT requires that all plans be prepared with MicroStation software. Additionally the Highway Division has agreed upon CADD standards (fonts, seed files, level attributes, libraries, and other standards) for use of the software. The Office of Bridges and Structures rules for the options are given in the files hyperlinked on the office web site MicroStation V8 documentation page (http://www.iowadot.gov/bridge/v8docs.htm). The designer and design technician should consult the page for all information regarding the use of MicroStation V8.

For projects that involve repair, extending, widening, demolition, or other work involving existing structures the designer needs access to inspection reports and other information about the structures. That information is available through the SIIMS (Structure Inventory and Inspection Management System) web application, for which the user needs an Enterprise A&A account. Office personnel have accounts, but for engineering consultants, instructions for obtaining an account are given on the main page for the application (https://www.siims.iowadot.gov/).

Hydraulic design programs developed by the office are available from the preliminary bridge design software web page (http://www.iowadot.gov/bridge/prelprog.htm).

BRIS (Bridge Information System) is a Microsoft Access database program, which is an inventory of bridge project work that can be queried. The primary advantage for many designers and detailers is the ability to search BRIS for previously designed bridges, culverts, and other highway structures so that standard office practices are followed and details are effectively reutilized. The designer is required to enter the BRIS data for a project with an assigned design number when design is completed. Data collection information is given in the BRIS Manual accessible from the start-up form for the program.

Final design software developed by the office is available from the final bridge design software web page (http://www.iowadot.gov/bridge/finalprog.htm).

BIAS 2000 is software for consultant use developed by the Iowa DOT for contracting state and local projects. See BDM 1.8.2.1 Bid items and quantities for more information.

1.14 Plan turn-in

A list of critical dates associated with each contract letting other than dates for the FHWA review submittal and D04 event is maintained by the Office of Contracts (http://www.iowadot.gov/contracts/CRITDATE.pdf). The plan turn-in date for a specific project is established in the office by the Assistant Bridge Engineer and by design contract with engineering consultants. On or before that date the following are to be submitted to the Office of Contracts.

- Completed project plan set (pdf) and
- Completed bid item list in PSS.

Plans for FHWA oversight projects are to be sent to the Iowa office of the Federal Highway Administration (FHWA) for review. Final or 100% unapproved plans for review should be sent to FHWA three to six weeks before the Office of Contracts turn-in date. The three to six week period allows FHWA personnel to return comments to be addressed before turn-in.

The project plan set may include both grayscale and color multi-page PDF files, as well as a multi-page cross section PDF file. The Office of Design's Design Manual gives the latest detailed instructions for preparing the project plan set [OD DM 1H1 and 21E-4].

Any special provisions (doc or docx) required by the plan set are to be submitted to the Specifications Section.

Consultants are required to submit the items listed above to the Office of Bridges and Structures for review two weeks before plan turn-in as discussed in *Conducting Business with the IA DOT Office of Bridges & Structures* [BDM 1.4].

The Office of Contracts reviews the proposed contract documents and may ask for revised plan sheets. After the review and any changes the office updates the final MicroStation CADD file and PDF plan set.

The supervising Section Leader is responsible for turning in the final multi-page PDF prints to the Office of Contracts. The supervising Section Leader will combine the PDF files from Design and Soils with the OBS PDF file and copy the combined multi-page PDF file to the Contracts plan turn-in folder. The supervising Section Leader shall also turn-in, when applicable, a separate multi-page PDF file containing any signed sheets referenced on the Title Sheet into a subfolder in the Contracts plan turn-in folder. The sub-articles below describe the items that shall be completed by the designer in the weeks leading up to plan turn-in. The designer is responsible for the completion of all items in the sub-articles.

1.14.1 Non-contract E-file submittals

The following non-contract E-file submittals are required when appropriate:

- Bridge and Culvert Repairs
  - Existing plans
  - Signed standards
- RCB culverts
  - Existing culvert plans
  - Signed culvert standards
- CCS bridges
  - Existing bridge plans
  - Signed bridge standards
  - Top of slab elevations spreadsheet
- PPCB bridges
  - Existing bridge plans
  - Signed bridge standards
  - Top of deck elevations spreadsheet
  - Bridge deck grade adjustment spreadsheet
  - PPC beam data spreadsheet
- Steel girder bridges
  - Existing bridge plans
  - Signed bridge standards
  - Top of deck elevations spreadsheet
  - Bridge deck grade adjustment spreadsheet

The naming convention for non-contract E-files uses the prefix "CC-RRRS-PPP_E-file" followed by a space and then the specific name of the file. Note that "CC" is the two digit county number, "RRRS" is the three digit route number followed by the federal control section number, and "PPP" is the three digit paren number. Leading zeros should be entered as needed. For example:

- 59-0346-079_E-file Top Of Deck Elevations Spreadsheet.xlsx
- 59-0346-079_E-file Bridge Deck Grade Adjustment Spreadsheet.xlsx
- 59-0346-079_E-file PPC Beam Data Spreadsheet.xlsx

~~1.14.1~~1.14.2 Plan coordination

For bridge replacement projects the Office of Design has prepared a flow chart for its work that includes the defined events in the design process and plan turn-in [OD DM 1D-1]. The flow chart and its associated task lists indicate what the bridge designer can expect from the Office of Design when the Office of Bridges and Structures has the lead for a project.

When the Office of Bridges and Structures does not have the lead, plans provided to another office, such as retrofit rails for Office of Design projects, need to be submitted by the scheduled B04 event date. When the Office of Bridges and Structures does have the lead it also can expect that plans from other offices, such as the geotechnical design sheets and roadway design sheets, are available by the scheduled event date (S04 & D04).

When receiving plan sheets from another office the design team shall, at a minimum, verify the following:

- Every sheet should have the project number and file number printed on it.
- Check information on the plans for consistency with the Bridge Design plans.
- For plans that include approach pavement, check for appropriate abutment designation (M for movable and F for fixed). Integral abutments are considered moveable because they will move against and away from the approach pavement when the bridge expands and contracts. Stub abutments are considered fixed because the backwall does not move with respect to the expansion and contraction of the bridge.

~~1.14.2~~1.14.3 Prior to plan turn-in

The design team is responsible for completing the following items a minimum of three weeks before plan turn-in:

- Obtain the final D4 road sheets and S4 soil sheets for OBS led projects.
- Turn in the final multi-page PDF prints from all offices and file envelope(s) to the Section Leader. Place all final multi-page PDF files from all offices in the project subdirectory under the BRFinal directory. The Section Leader will route final or 100% unapproved plans for review to the appropriate Offices and District personnel.
- Complete the electronic BRIS form using the BRIS Information System on the web. This form is initiated by the B3 or B4 event date; therefore, the design engineer or technician will wait until after plan turn-in to complete the BRIS form.
- When checking the file envelope, do not erase anything. Place a line through any incorrect information and add the updated information to maintain a history of the changes.
- Complete/Verify the Design Criteria sheet is complete for all new and replacement bridges. Place a copy in the file envelope.
- Verify that PSS bid items are complete, Road Design bid items are included in a separate division.
- Verify that the Bridge 2000 is completed for new and replacement bridges and bridge sized culverts. Place a copy in the file envelope.
- Create a new LARS program run for new bridges and bridge replacements. Email the Bridge Rating Engineer with the input files (.txt and excel files), and they will store the LARS file as needed. This may be postponed if necessary, but must be completed before the construction work is completed.
- For minor bridge repairs or rehabilitation projects (e.g. retrofit rails, deck overlays, and deck replacements), email a link of the plan set to the Rating Engineer, and they will modify the LARS file.
- For bridge repairs that modify the superstructure design (e.g. beam replacements or other major bridge rehabilitation projects), create a new LARS program and follow the same procedure above similar to new bridges.
- Complete the B3 or B4 cost estimate.
- Fill out the “Bridge, Culvert, and Notes Plan Review Checklists”.
- Turn in all E-files~~ and required signed Bridge Standards~~. Place these in the same directory as the pdf plan prints (BRFinal directory).

- If time permits, the design technician should complete maintenance sketches for new and replacement bridges/bridge size culverts for review by the Assistant Maintenance Engineer.

1.15 Plan changes

Although it is expected that most plan sets will be in final condition at turn-in, there are provisions for changes. During the two weeks immediately after turn-in to the Office of Contracts it is possible to simply swap sheets. The last day for plan changes is given on the Office of Contracts Letting Schedule (http://www.iowadot.gov/contracts/CRITDATE.pdf).

After plans have been advertised, changes require an addendum so that all project bidders are informed of the changes. For an addendum, a request to issue an addendum must be sent to the Office of Contracts proposal engineer. The Office of Contracts decides whether the change or error correction warrants an addendum or a revision. Addendum requests may also be originated by the Office of Contracts if an error correction or change is required to let the project. Requests shall include modified plan sheets with an addendum stamp. The Office of Design's Design Manual gives the latest detailed instructions for preparing and submitting an addendum [OD DM 21M-61]. The specifics on D&C Manager and excel tools do not apply to our office.

1.16 Plan revisions

Following the project letting plan revisions can be issued. Plan revision sheets are to show a deletion crossed-through and it and any associated changes encircled with a cloud, so that the entire change is easy to see. Plan revisions should be coordinated with the Resident Construction Engineer so the appropriate contract modification can be written if necessary.

Instructions for creating revision sheets in MicroStation are given on the V8 bridge documentation page on the office web site (http://www.iowadot.gov/bridge/v8docs.htm).

1.17 Shop drawings

The office reviews shop drawings to ensure that the structural adequacy of the design is maintained as detailed on the original design drawings. The review of working drawings submitted by a contractor covers only requirements for strength and arrangement of component parts and does not cover bills of material. The extent of the shop drawing review will vary with each design. For complex designs the reviewer shall discuss in advance the extent of the shop drawing review with the supervising Section Leader.

When reviewing shop drawings the reviewer shall place a small red check mark by all items checked correct on the drawing and make any additions or corrections to the drawing in red. So that scanned copies of the checked drawings are legible the reviewer shall not use highlighters.

Shop drawings for bridges with steel superstructures shall be reviewed according to the guidelines in the Steel Girders and Beams section of this manual [BDM 5.5.2.4.3].

The office also reviews shoring plans when such plans are required. In general a shoring plan review follows the guidelines for shop drawing review.

1.18 Local Systems Review

Local Public Agency (LPA) structures shall be reviewed by the Office of Bridges and Structures if the structures are either on the National Highway System (NHS) or federally funded using non-standard designs. LPA structures designated for review will need to go through either a cursory review or an in-depth review. If the structure is on the NHS, then an in-depth review will be required. All other structures will only require cursory reviews. In-depth reviews will generally be assigned to the Consultant Coordination Section. In rare cases, the Final Design sections may be assigned in-depth reviews. In-depth reviews shall use the Bridge Checklist. Cursory reviews will be assigned to the Final Design

sections and checked using the LPA Cursory Review Items for Bridge and Culvert Plans as listed in the commentary of this section.

The review engineer is responsible for completing the review in conformance with the Instructional Memorandum for LPA Check and Final Bridge or Culvert Plans, I.M. 3.510. The review engineer shall return their cursory review comments or in-depth check plans to the LPA in accordance with the memorandum.

NHS links:
http://www.iowadot.gov/systems_planning/pdf/nhs_map.pdf
http://www.fhwa.dot.gov/planning/national_highway_system

Bridge Plan Review Checklist link:
http://www.iowadot.gov/bridge/policy/Bridge_Chklist.pdf

Instructional Memorandum for LPA Check and Final Bridge or Culvert Plans, I.M. 3.510, link:
http://www.iowadot.gov/local_systems/publications/im/3510.pdf