MOVING FROM 2D TO 3D

- WE ALWAYS DESIGN IN 3D

-WE LIVE IN A 3D WORLD

-MAKING DESIGNS VIRTUAL REALITY

-QUALITY, CONTROL, VERIFICATION

-SOFTWARE, BENTLEYS MICROSTATION, REBAR AND PROSTRUCTURES

kcICON Missouri DOT

Conventional 2D drawings GP&E

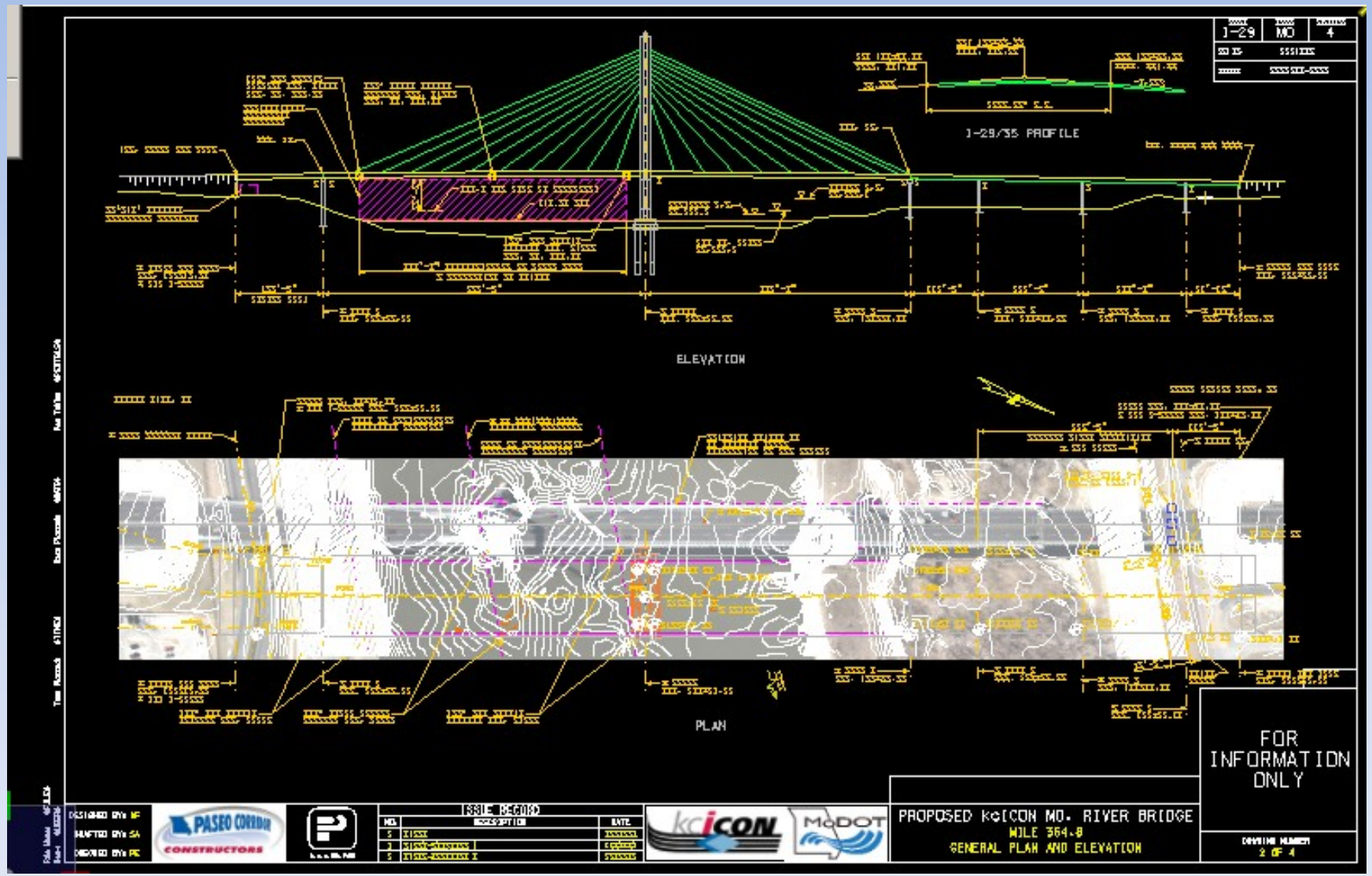

Pylon Elevation and Section

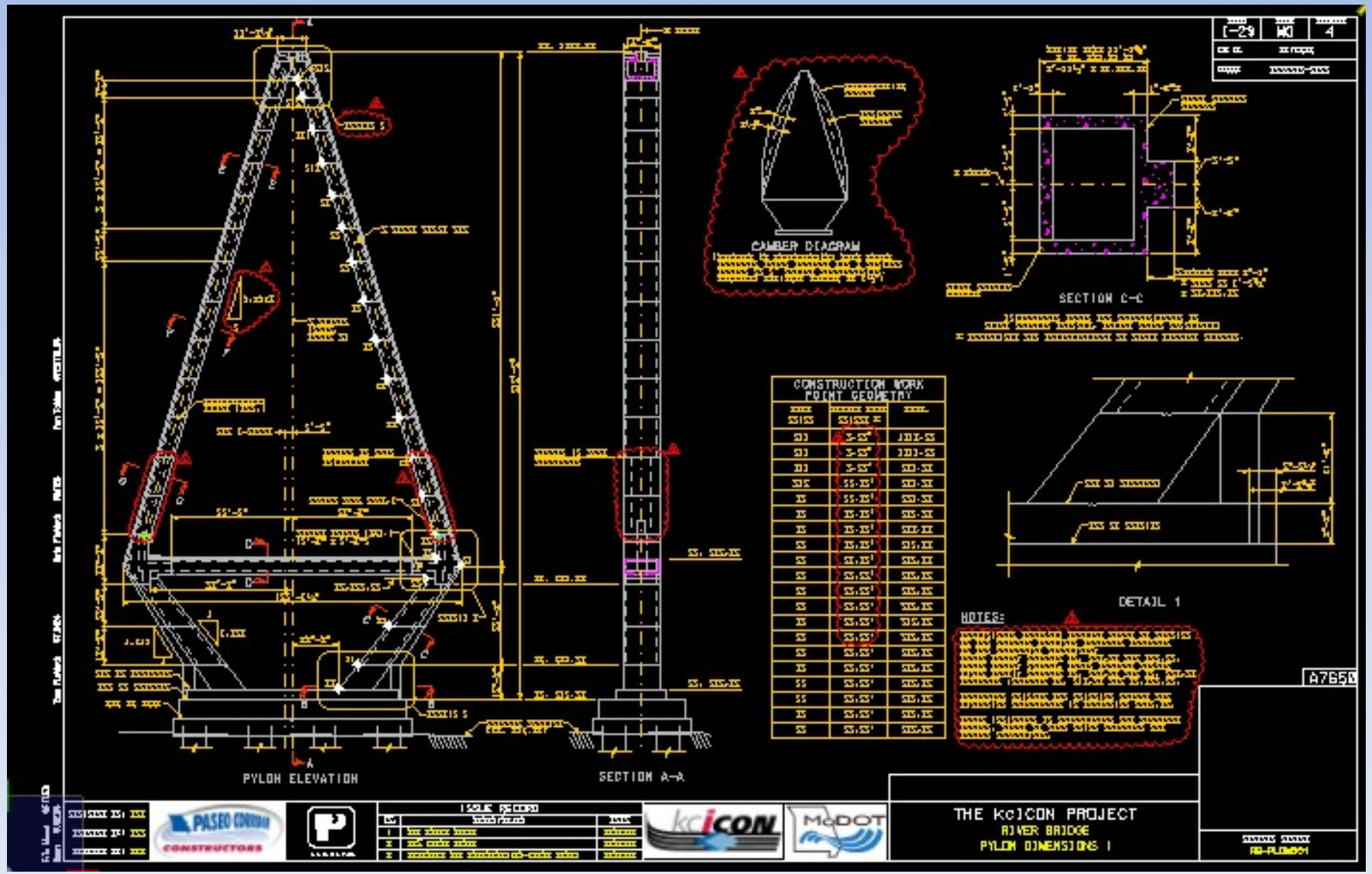

Pylon Head Enlarged Sections

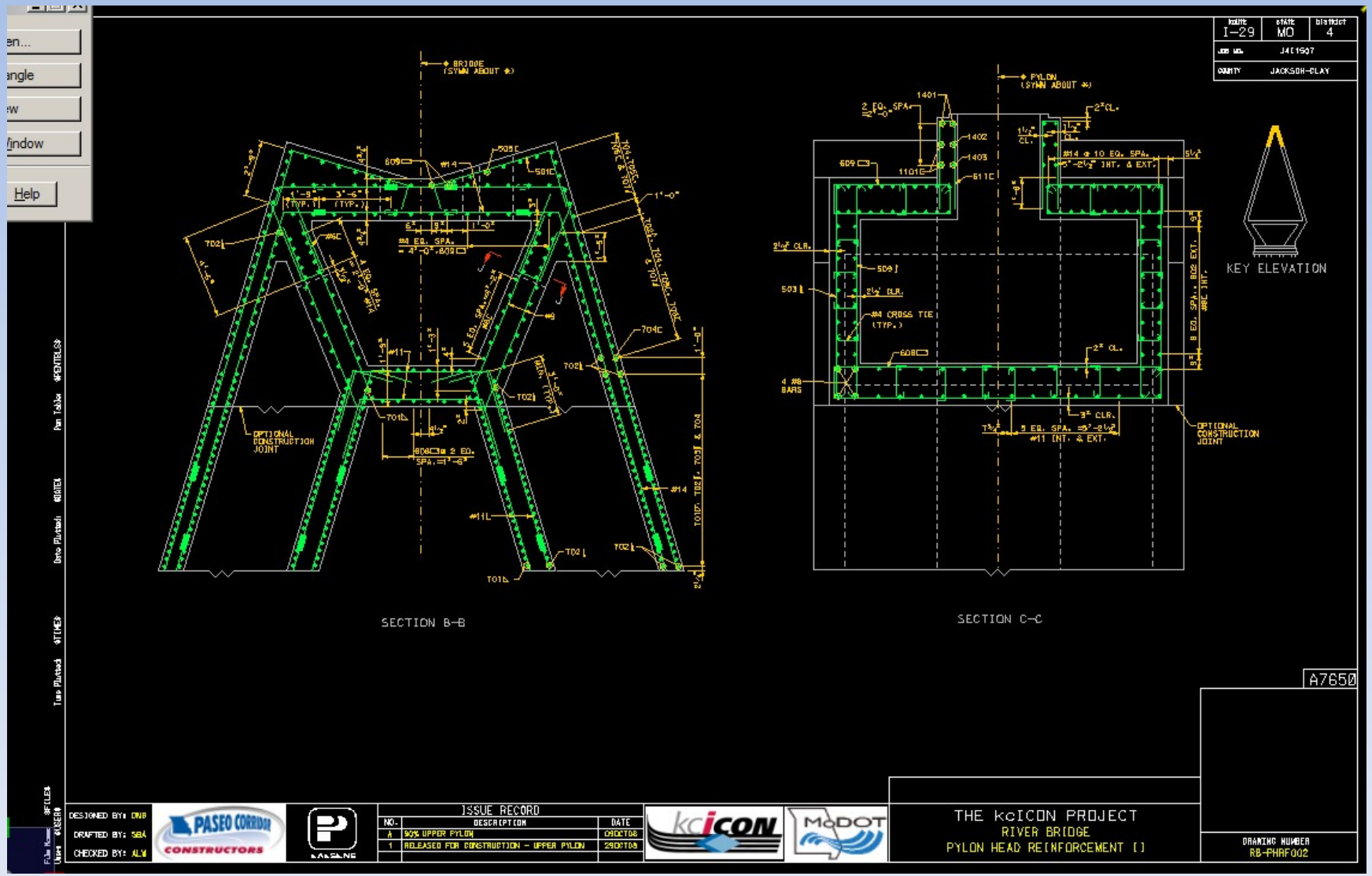

More Sections

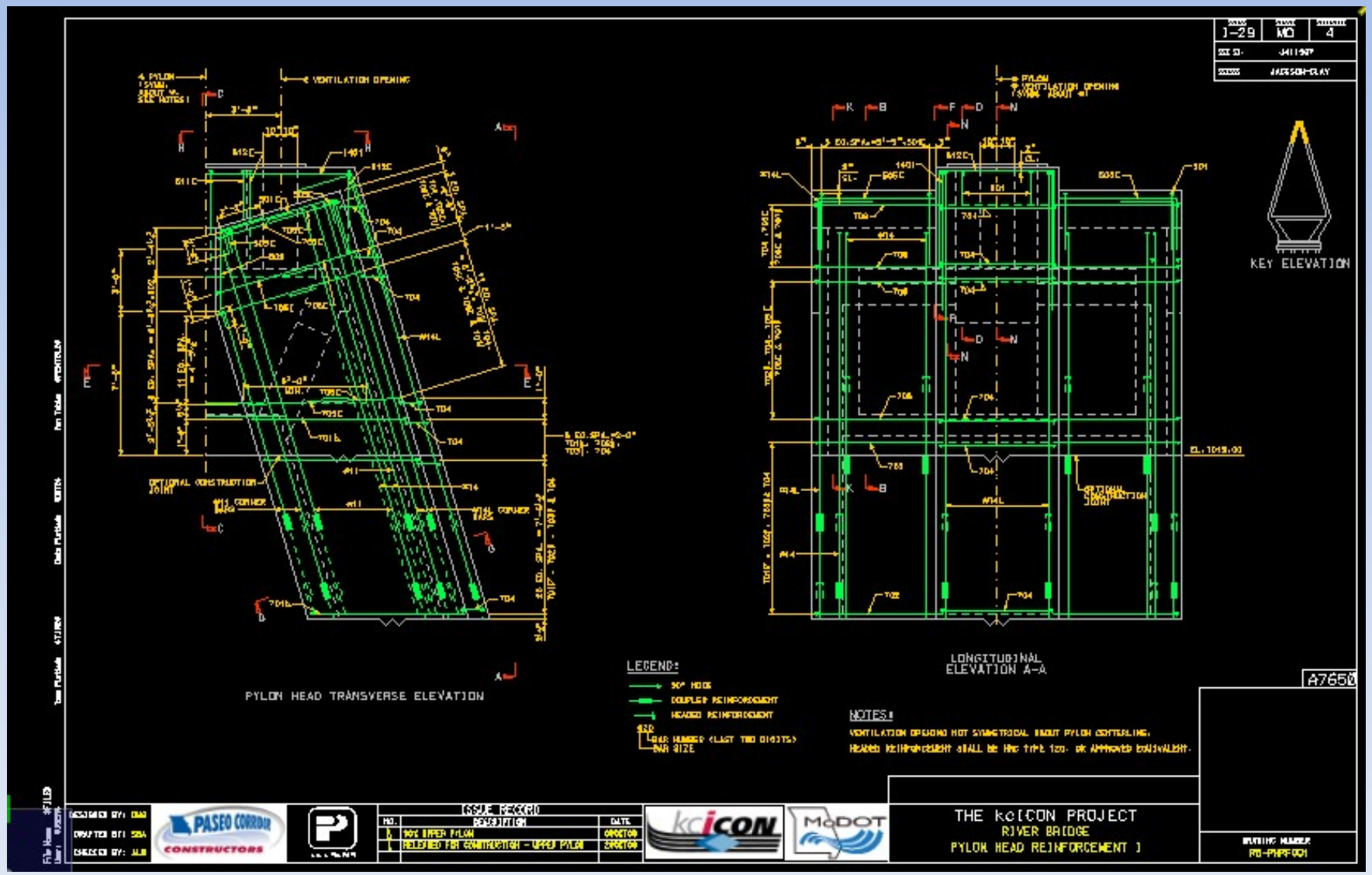

Looks like Conventional 2D drawing

Elevation

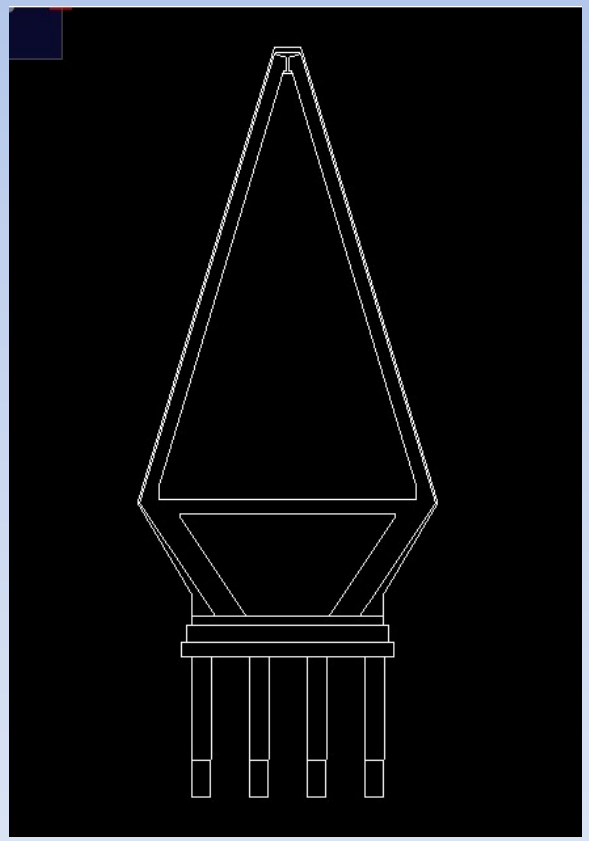

Side View

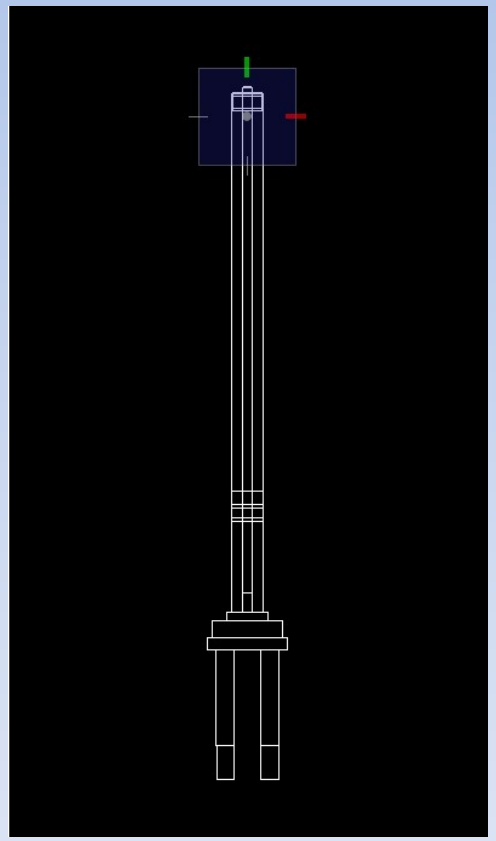

3D model

Wireframe

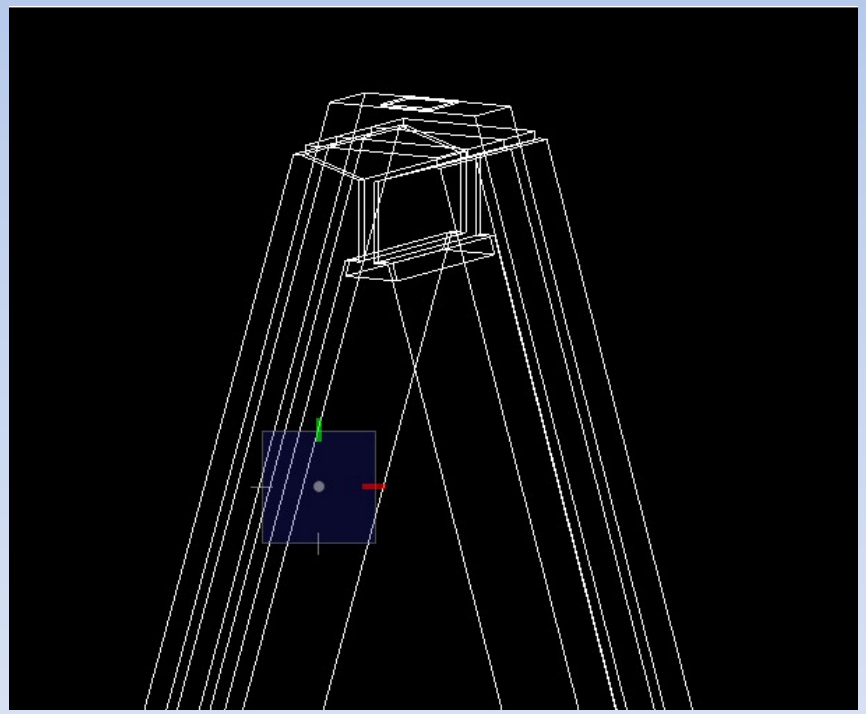

Rendered

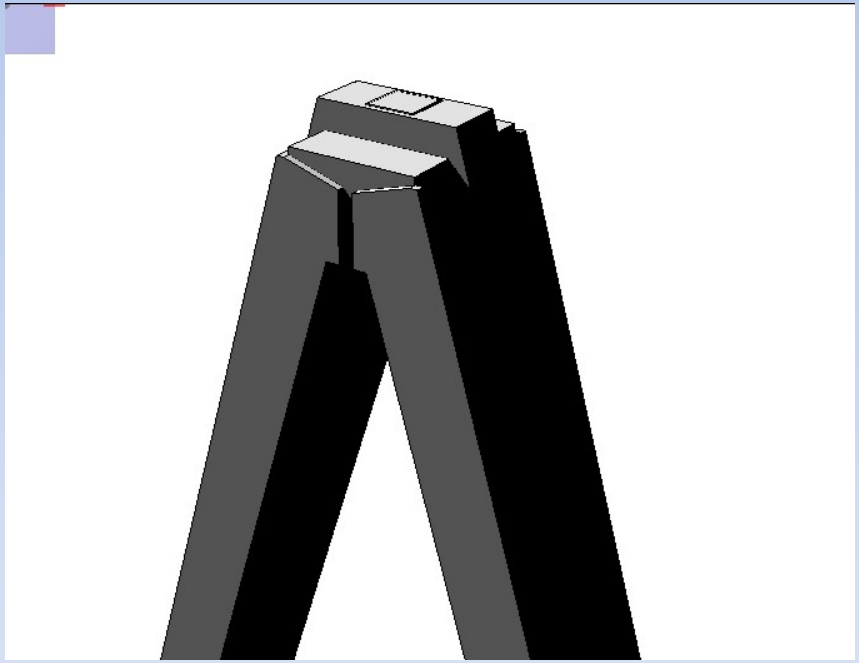

Roadway Strut Elevation

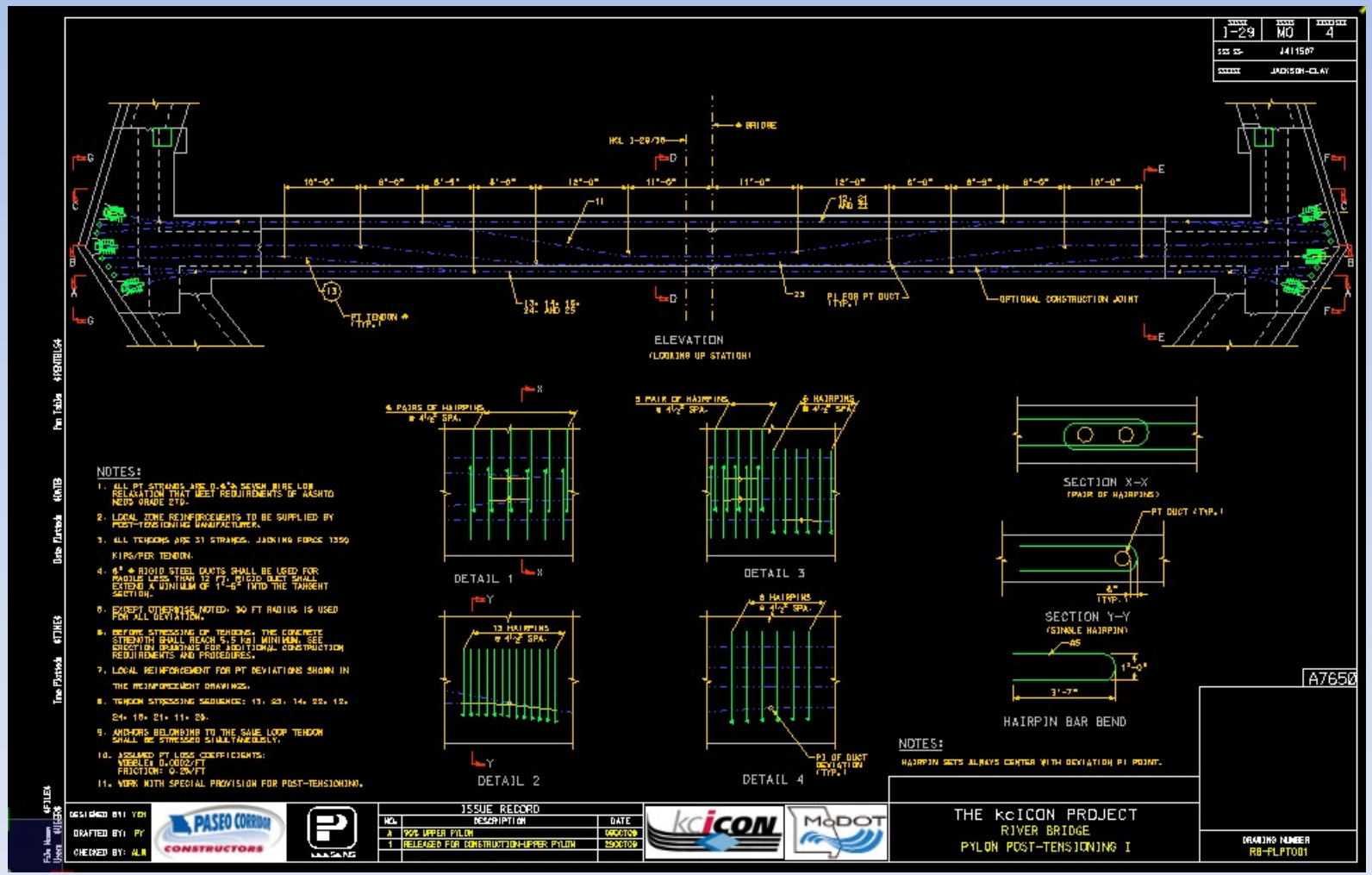

Knuckle Enlarged Sections

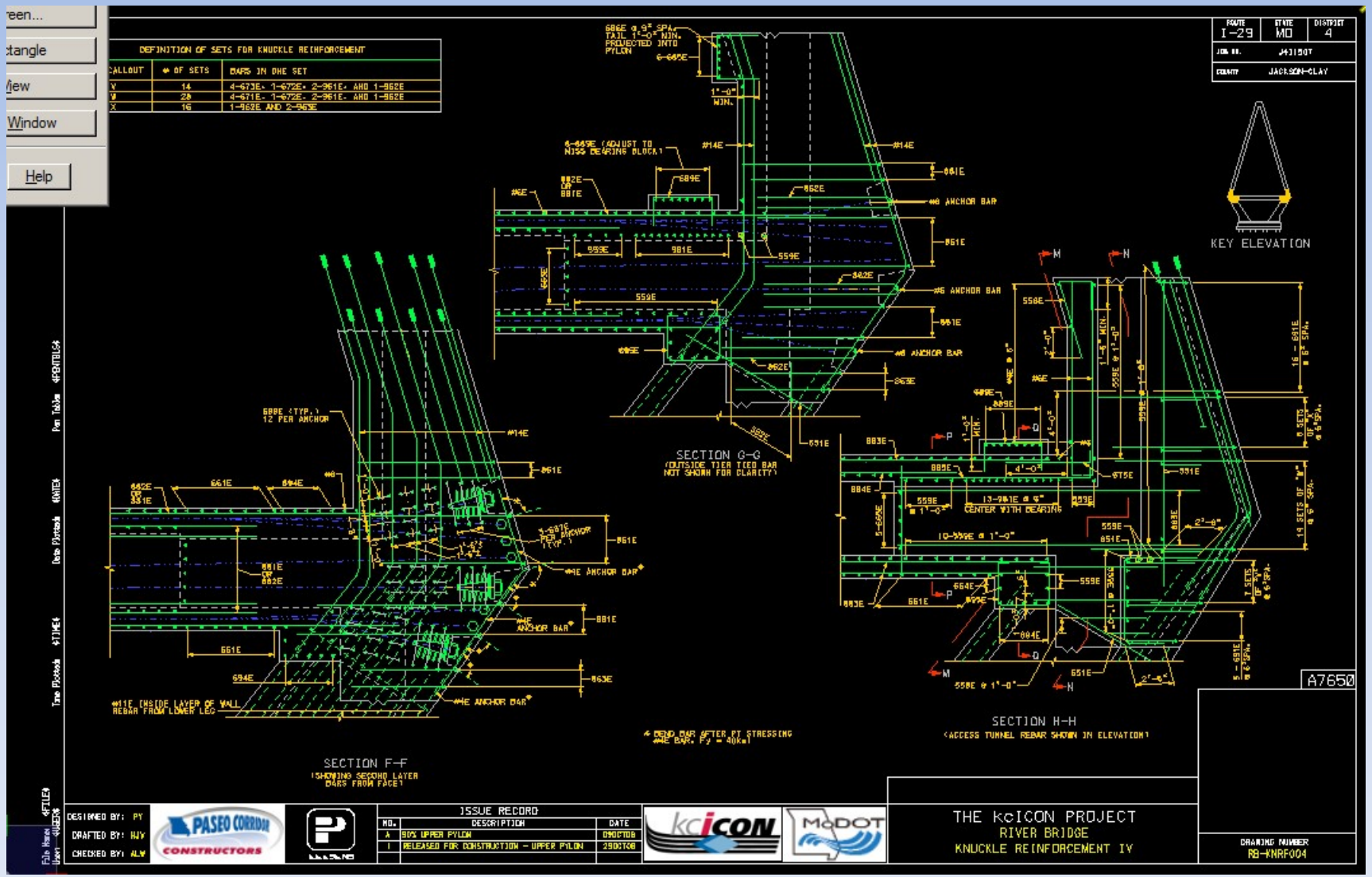

Looks like Conventional 2D drawing

Elevation

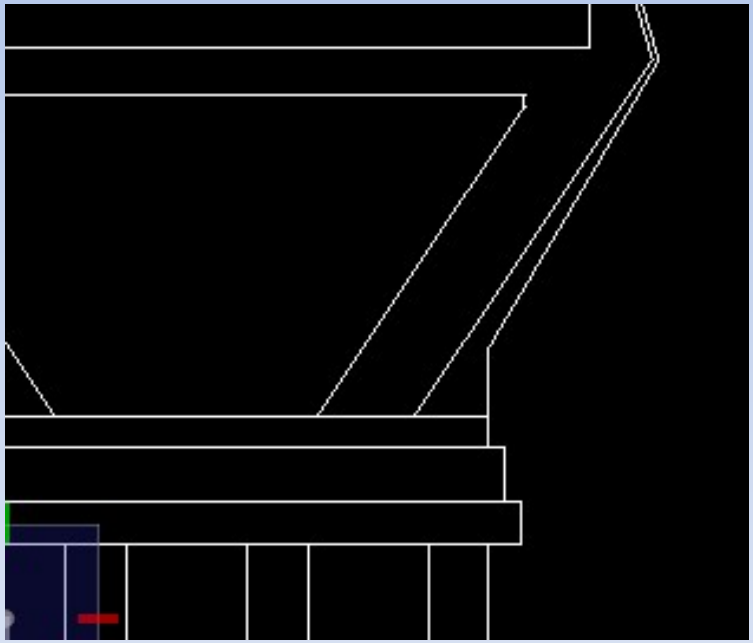

Side View

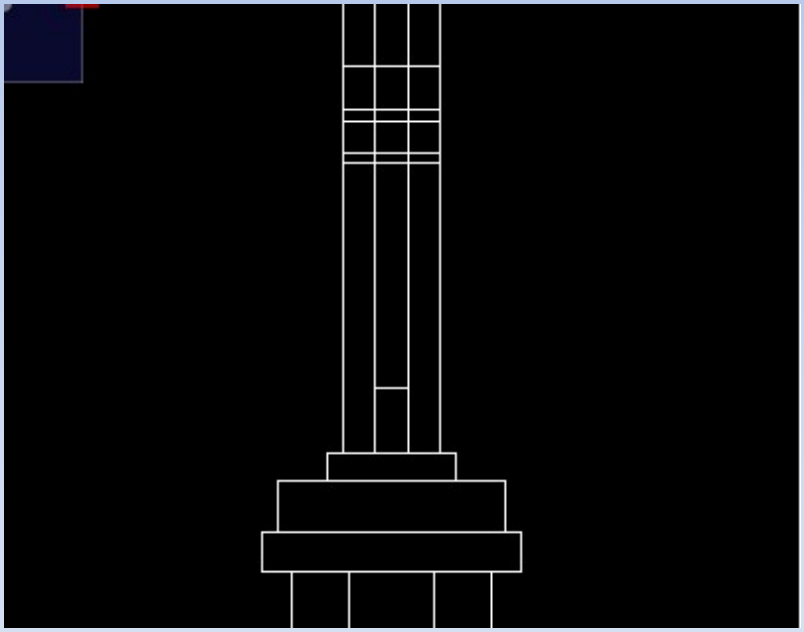

3D model

Wireframe

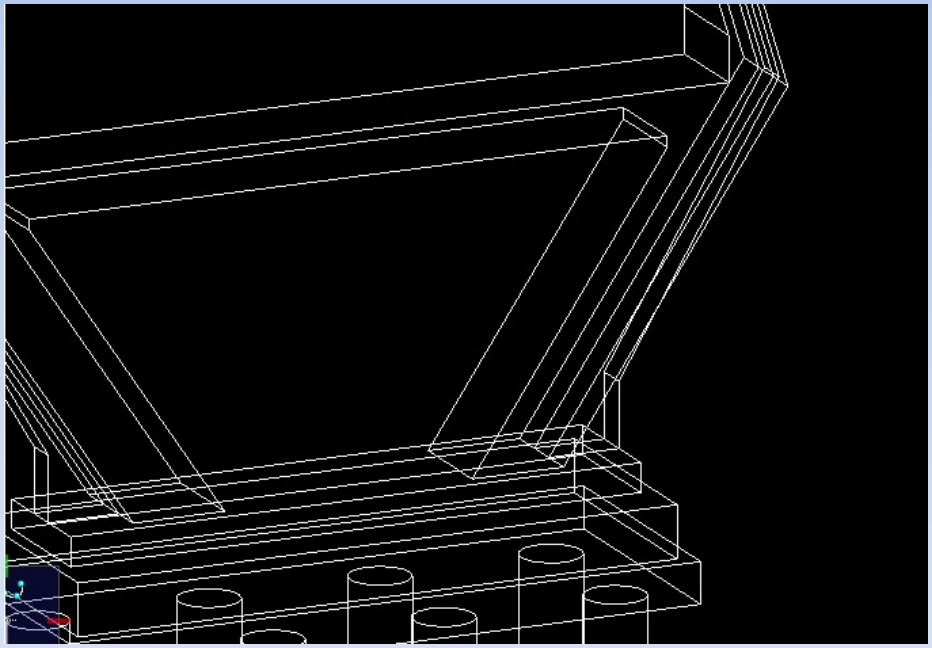

Rendered

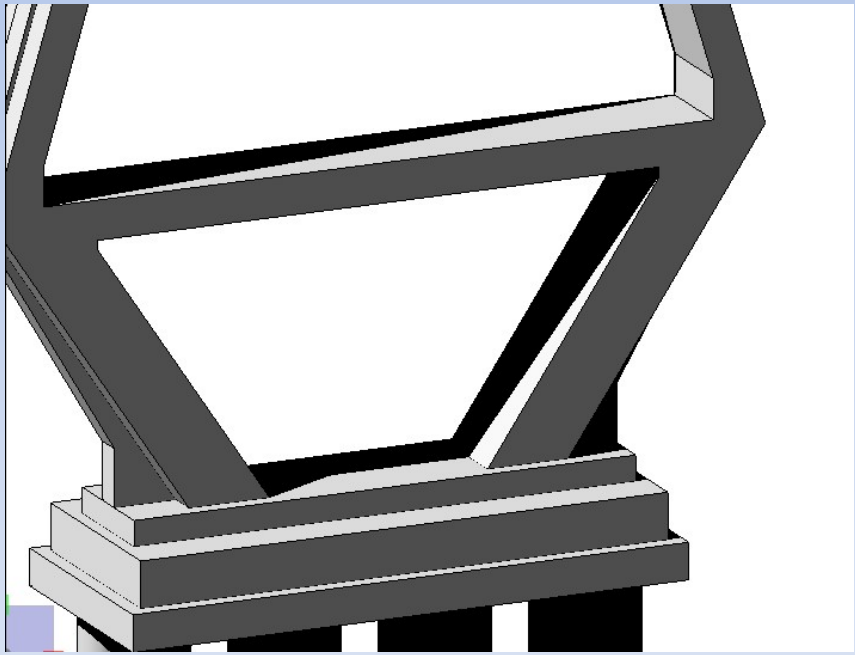

3D model

Wireframe

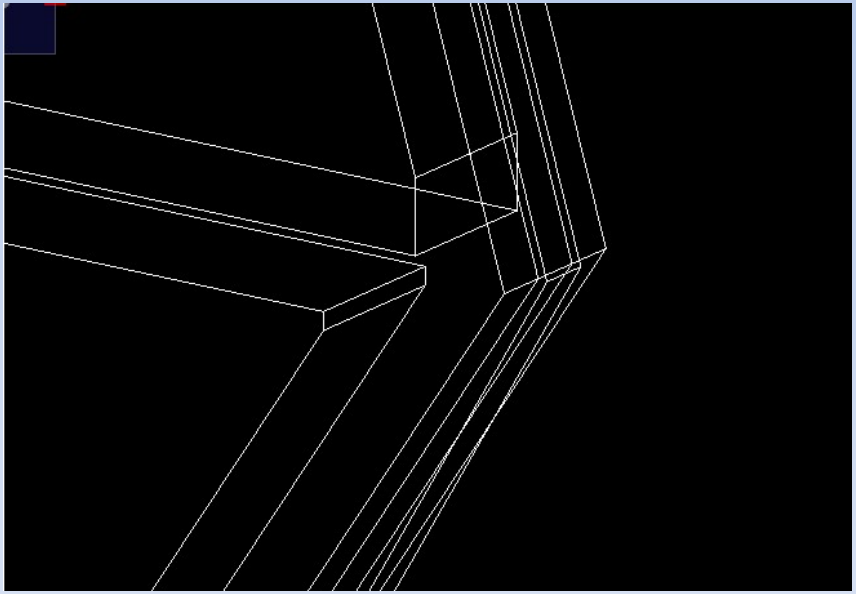

Rendered

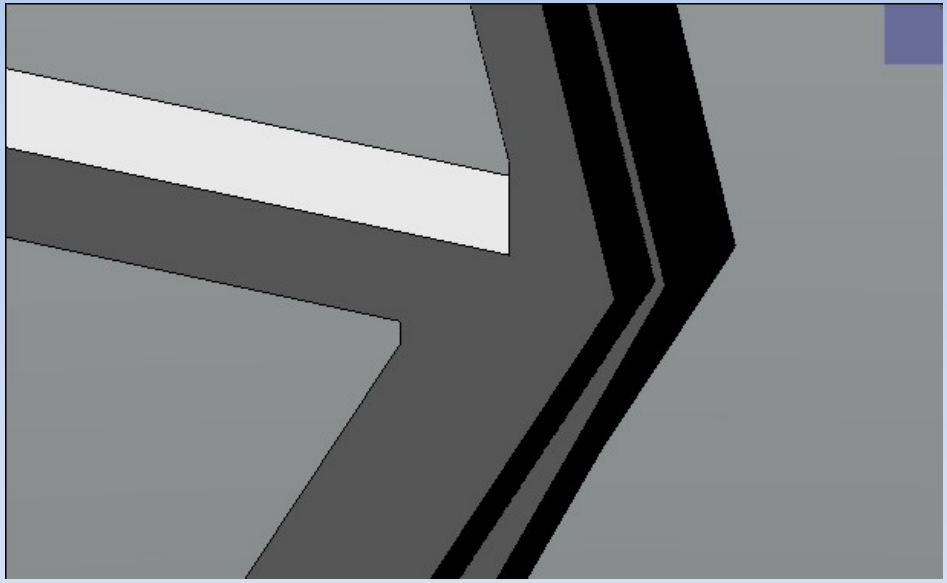

Pylon concrete sections

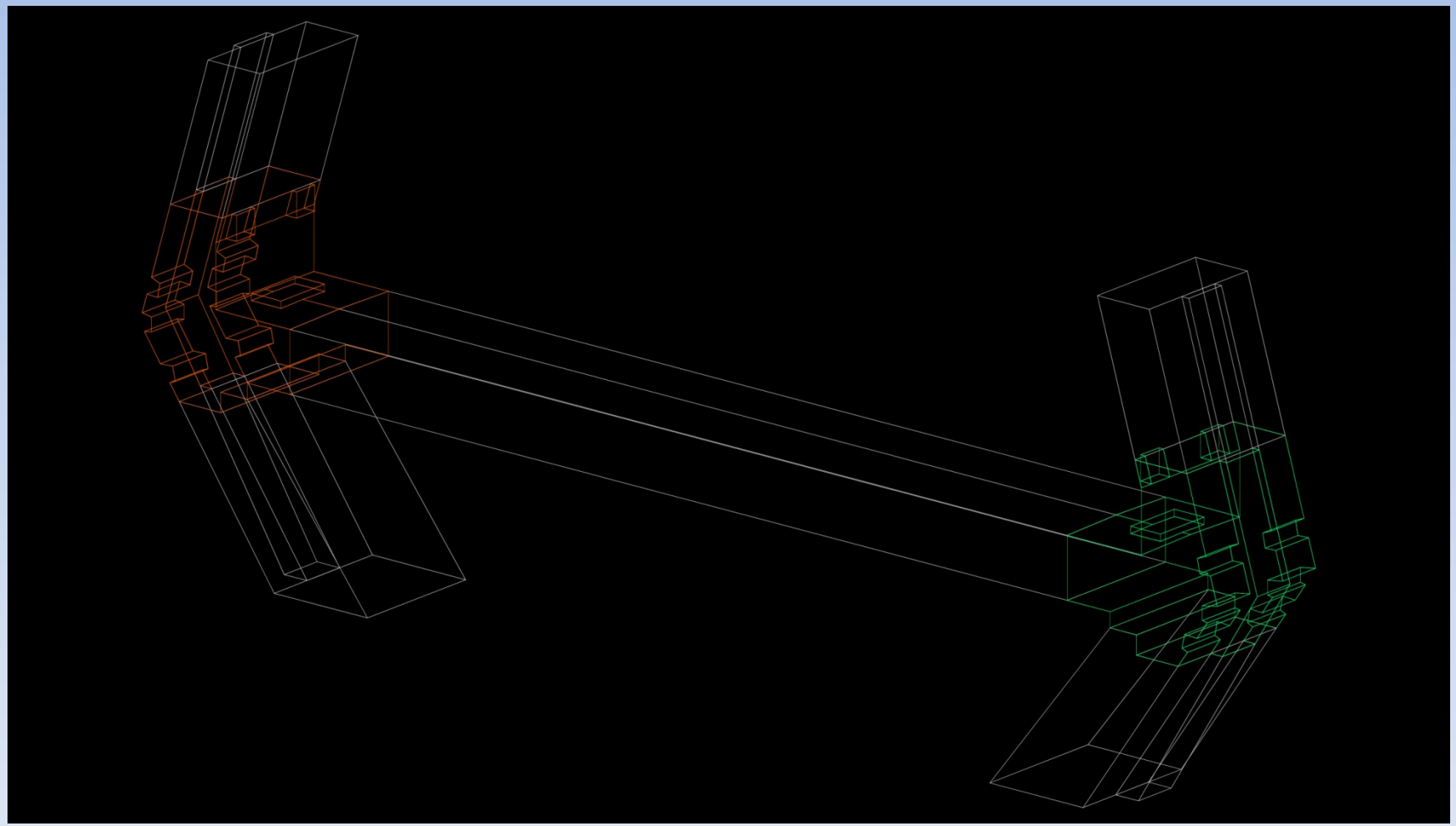

3D model

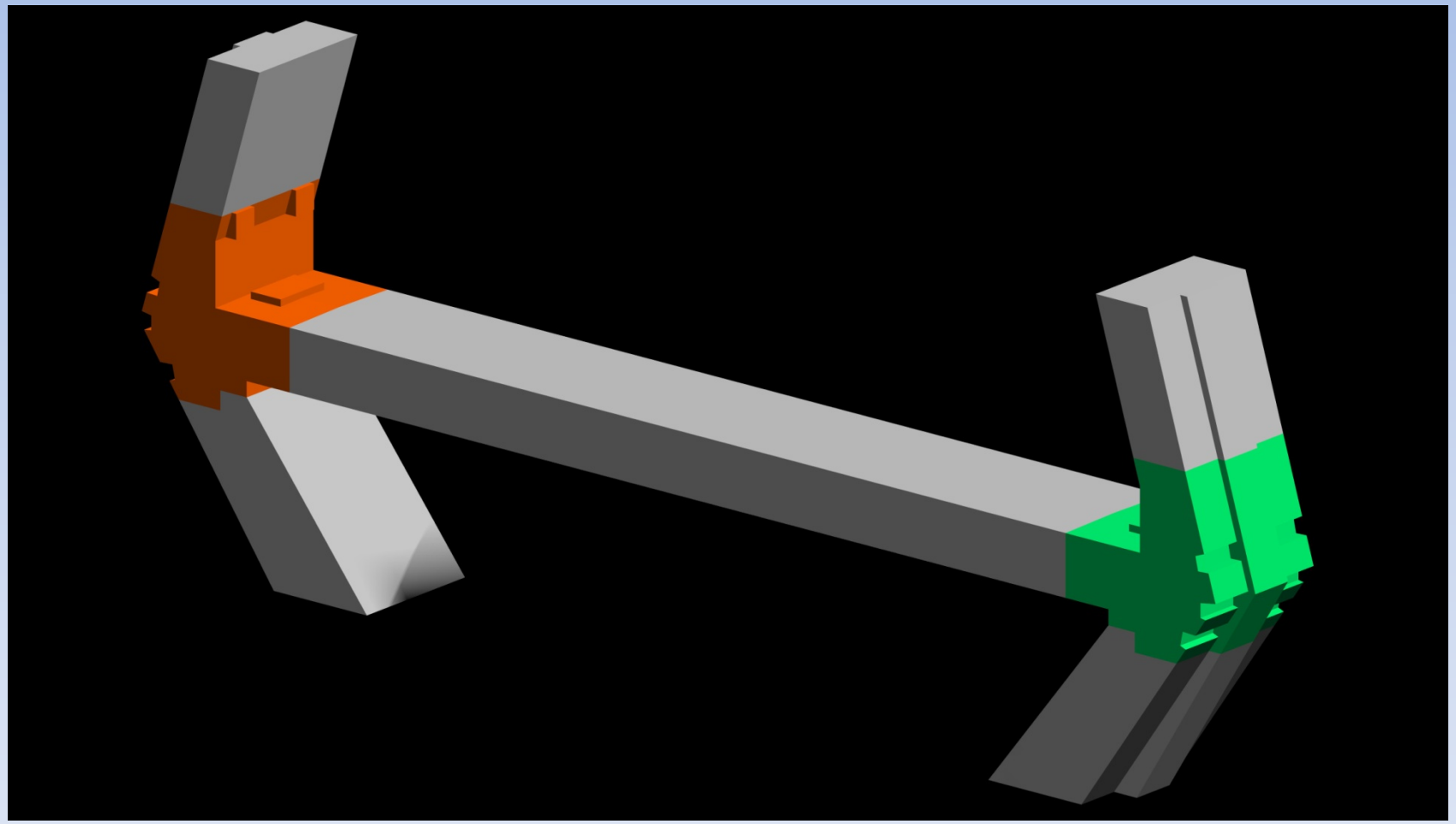

Adding Post-tensioning

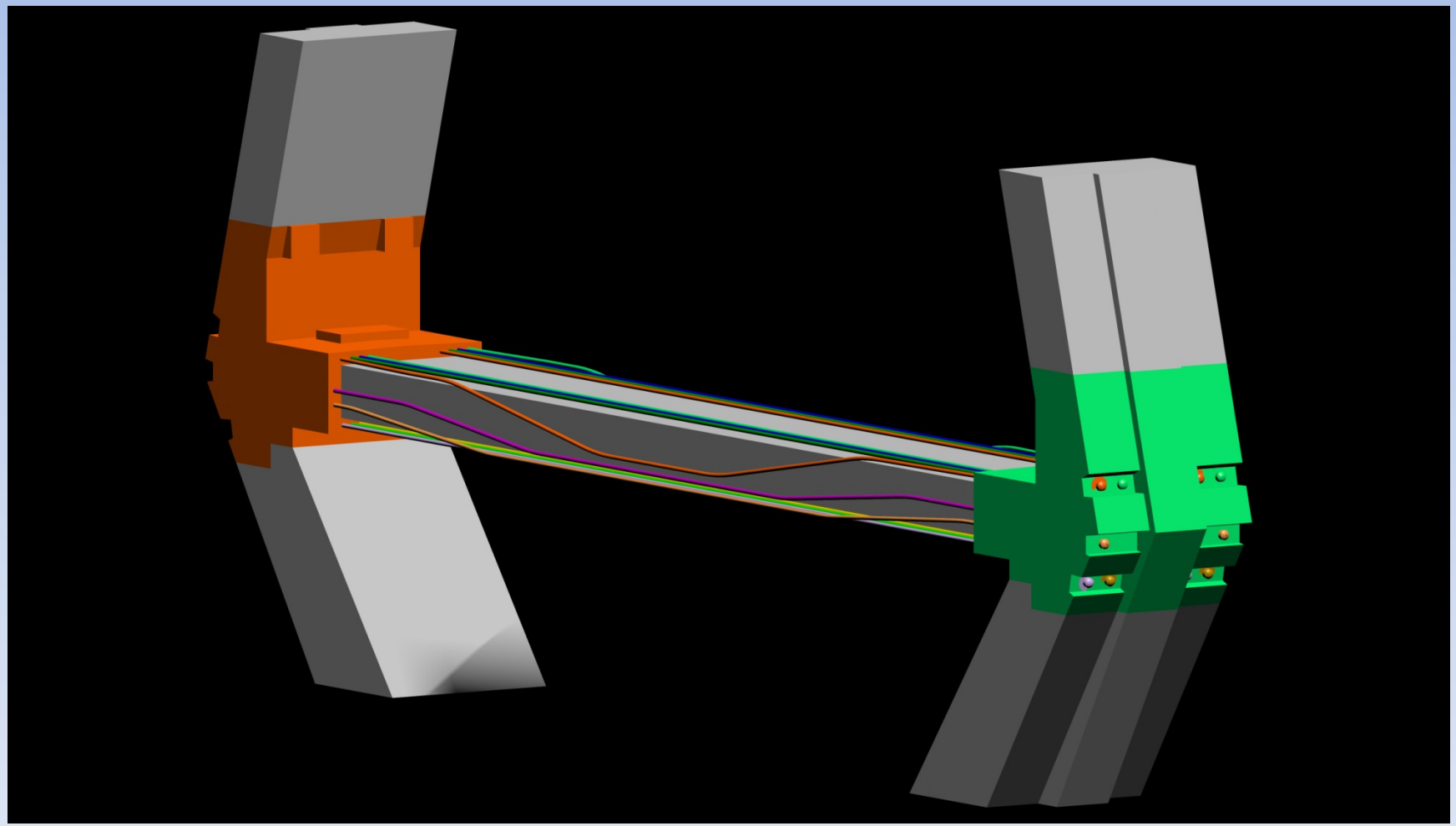

Maintenance interior void

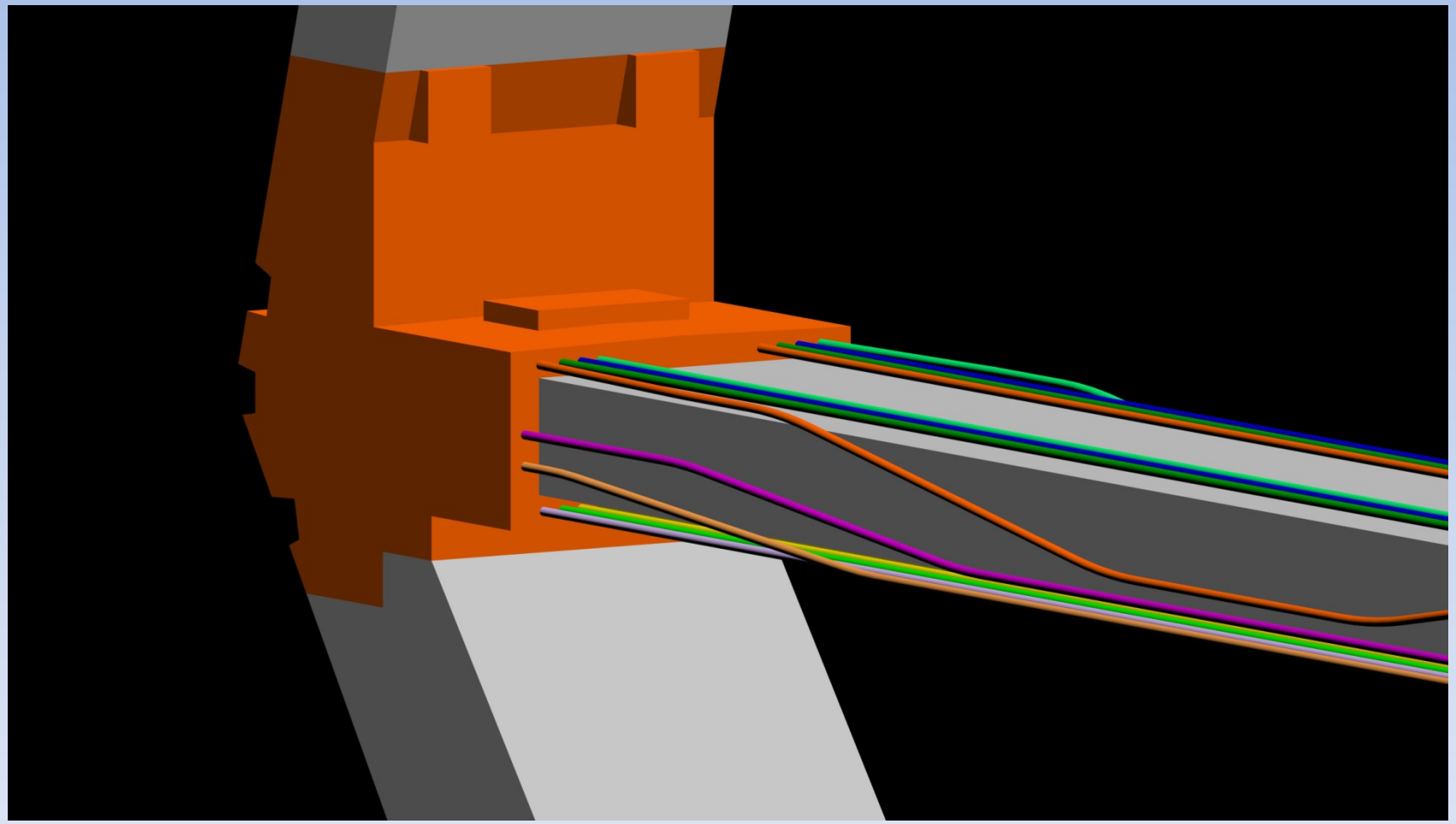

Exterior vs Interior

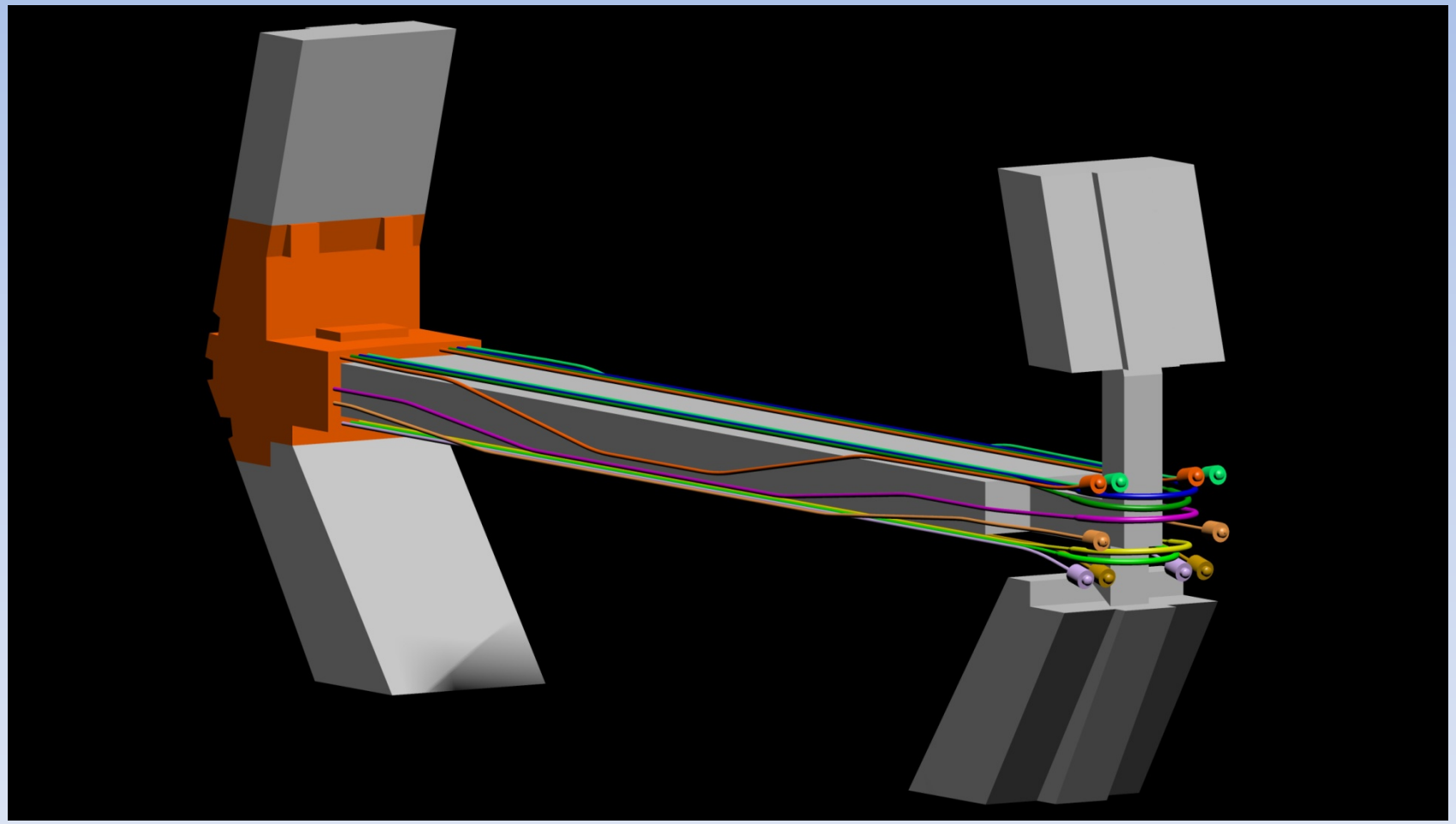

Transparent Roadway Strut Post Tensioning

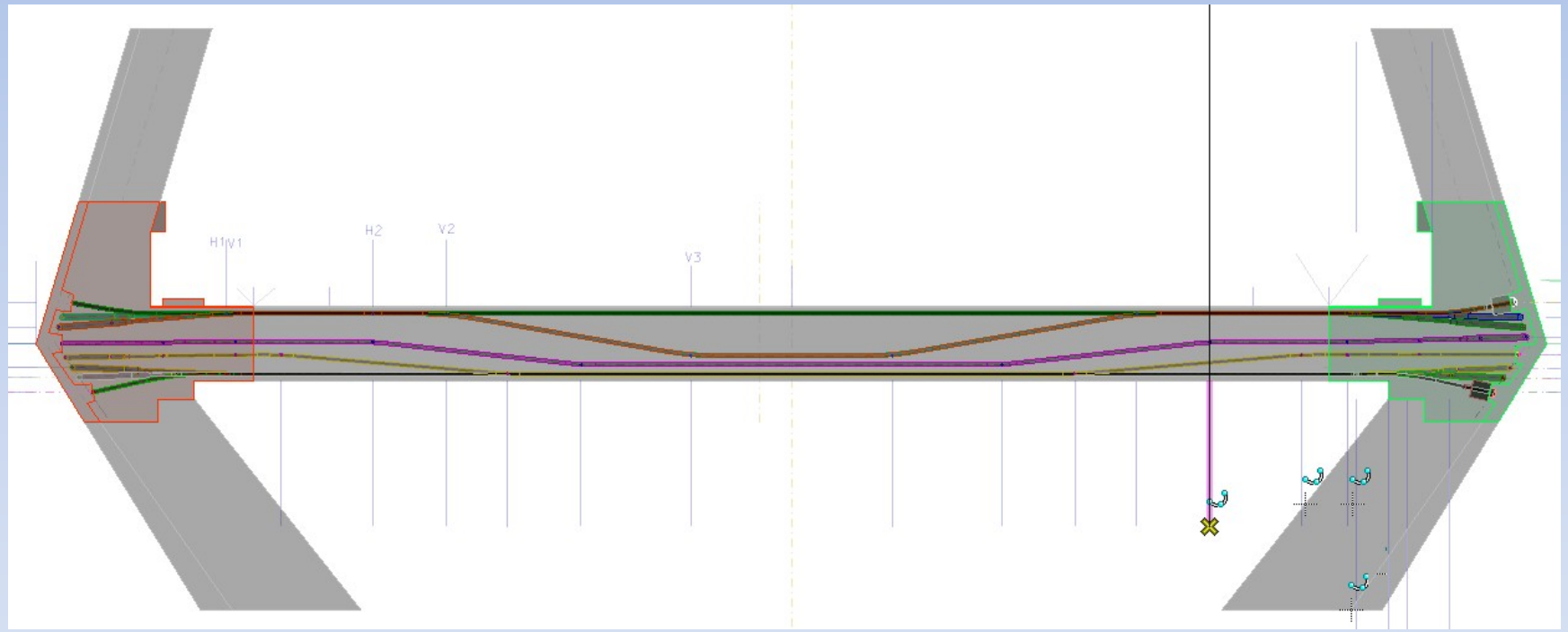

Post Tension Ducts around Roadway Strut Interior

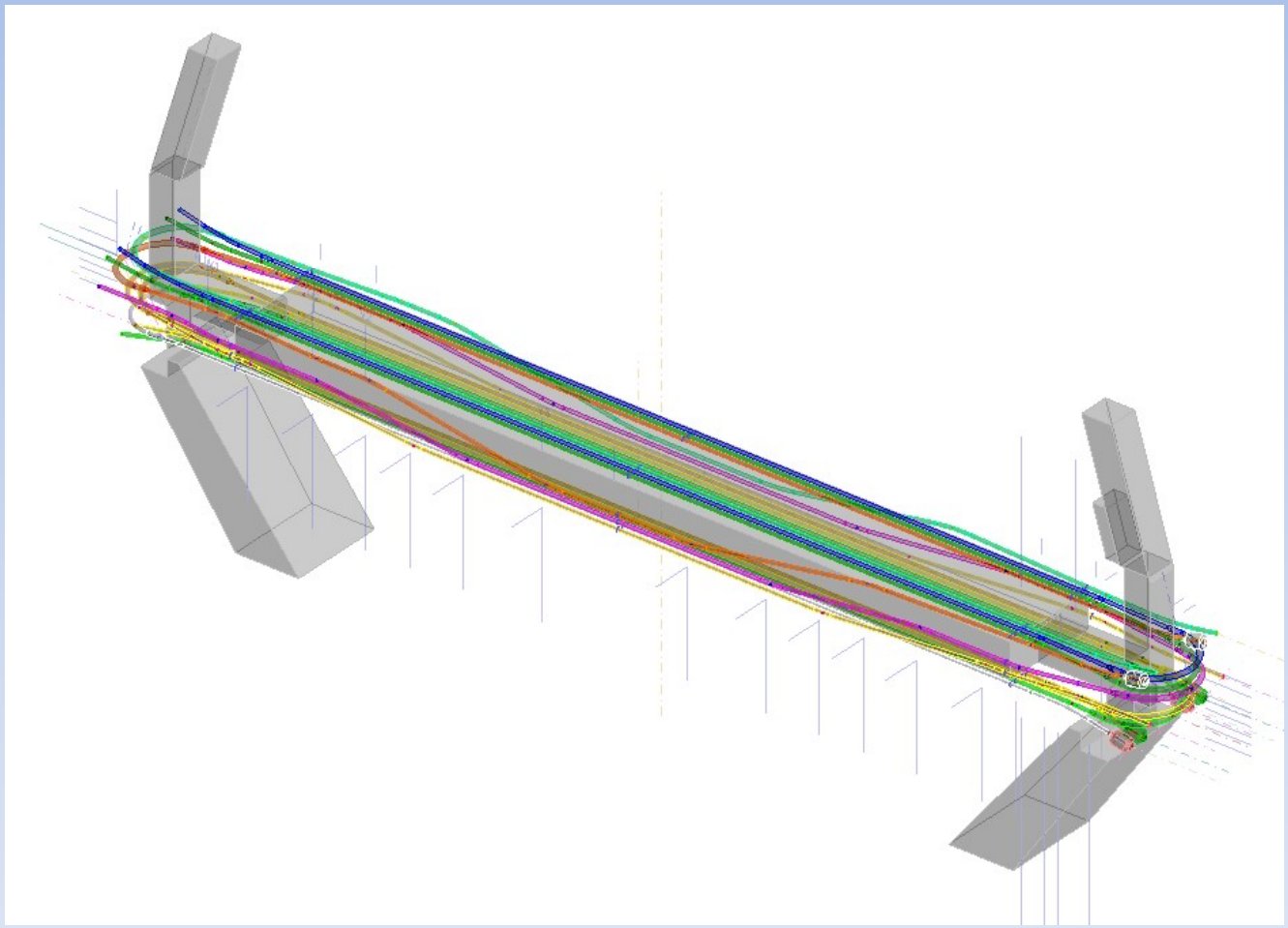

Post Tension Ducts around Roadway Strut Exterior

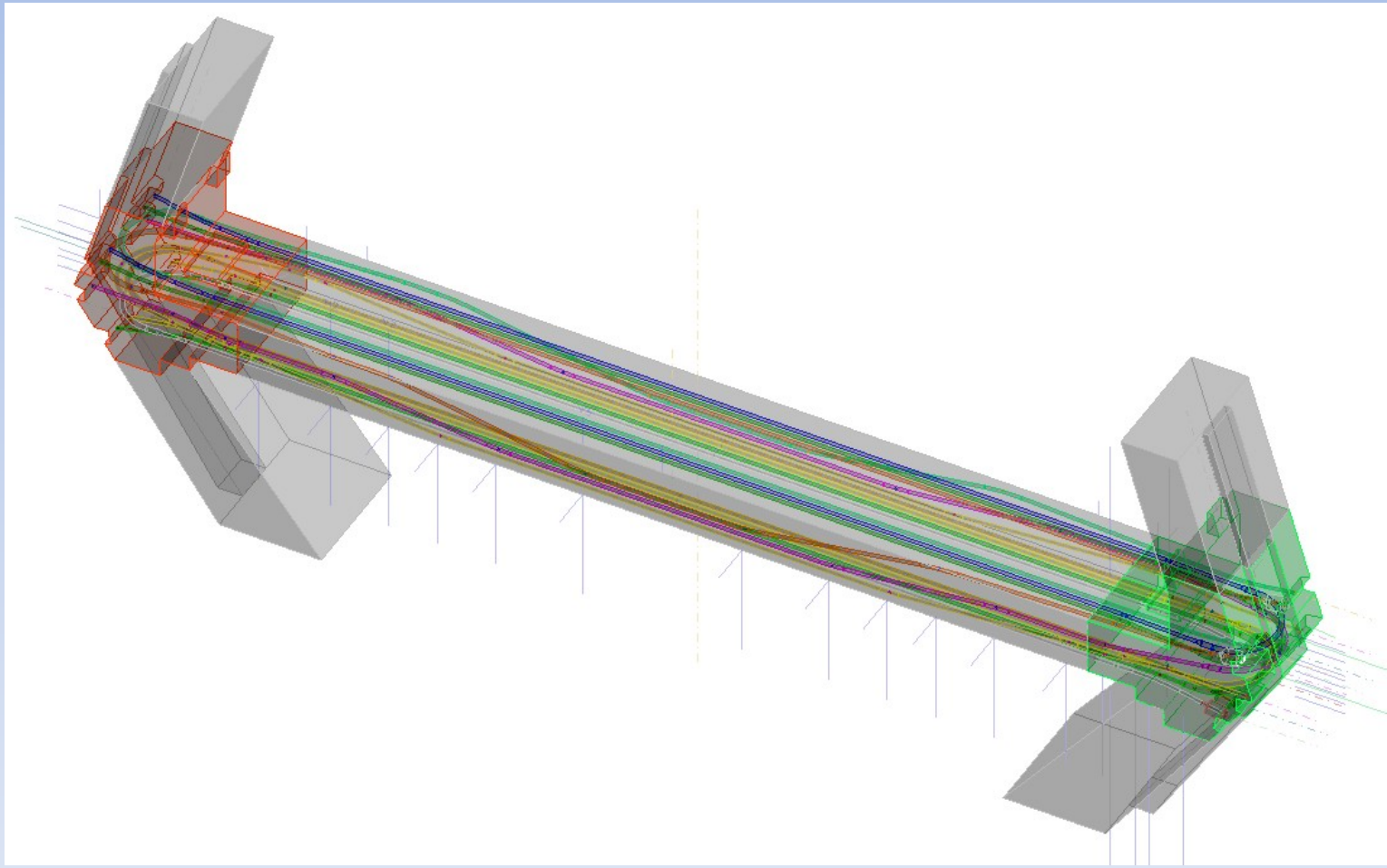

Knuckle with Post Tension Anchors and Blockouts

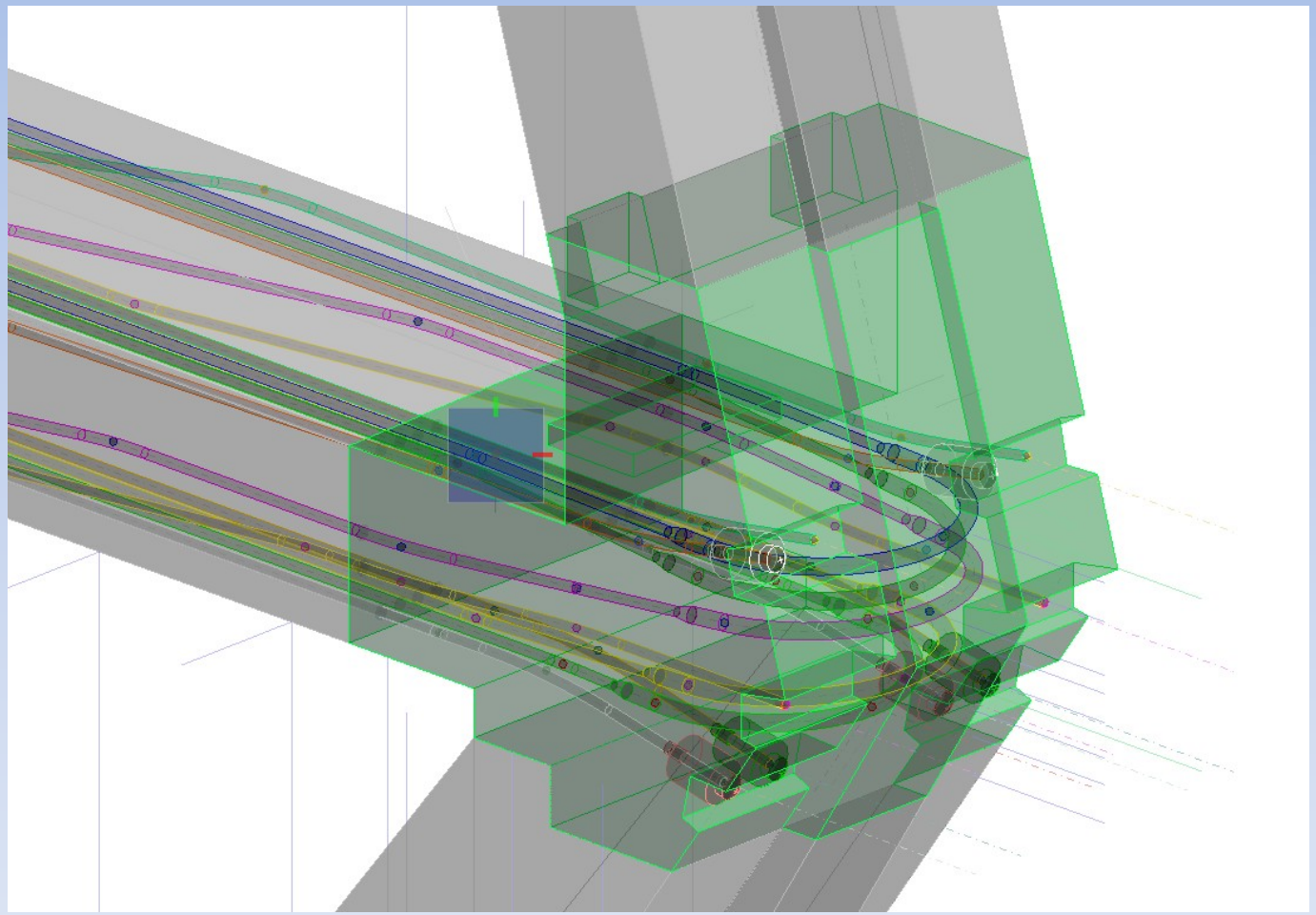

Introduction of some rebar

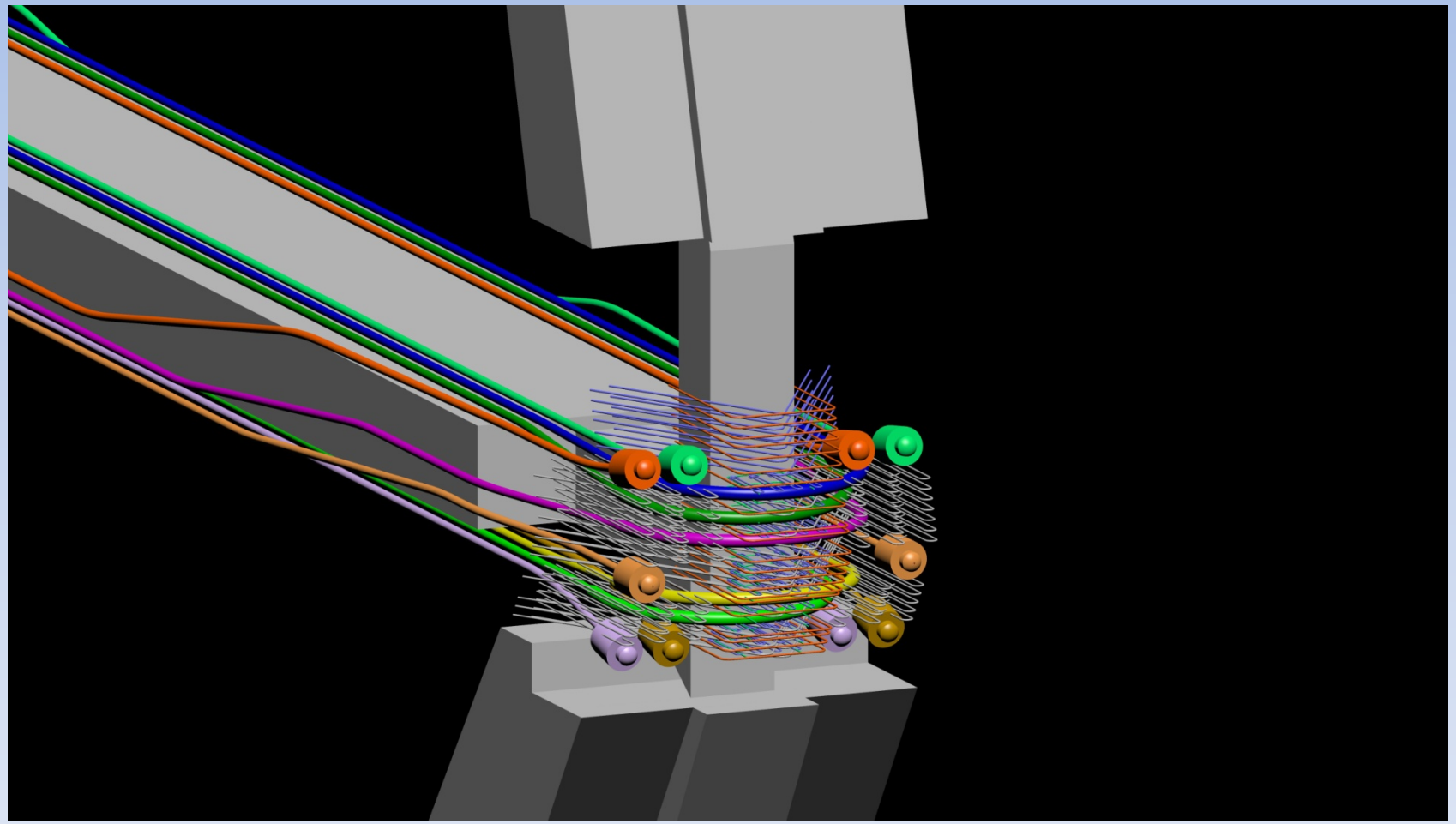

More rebar

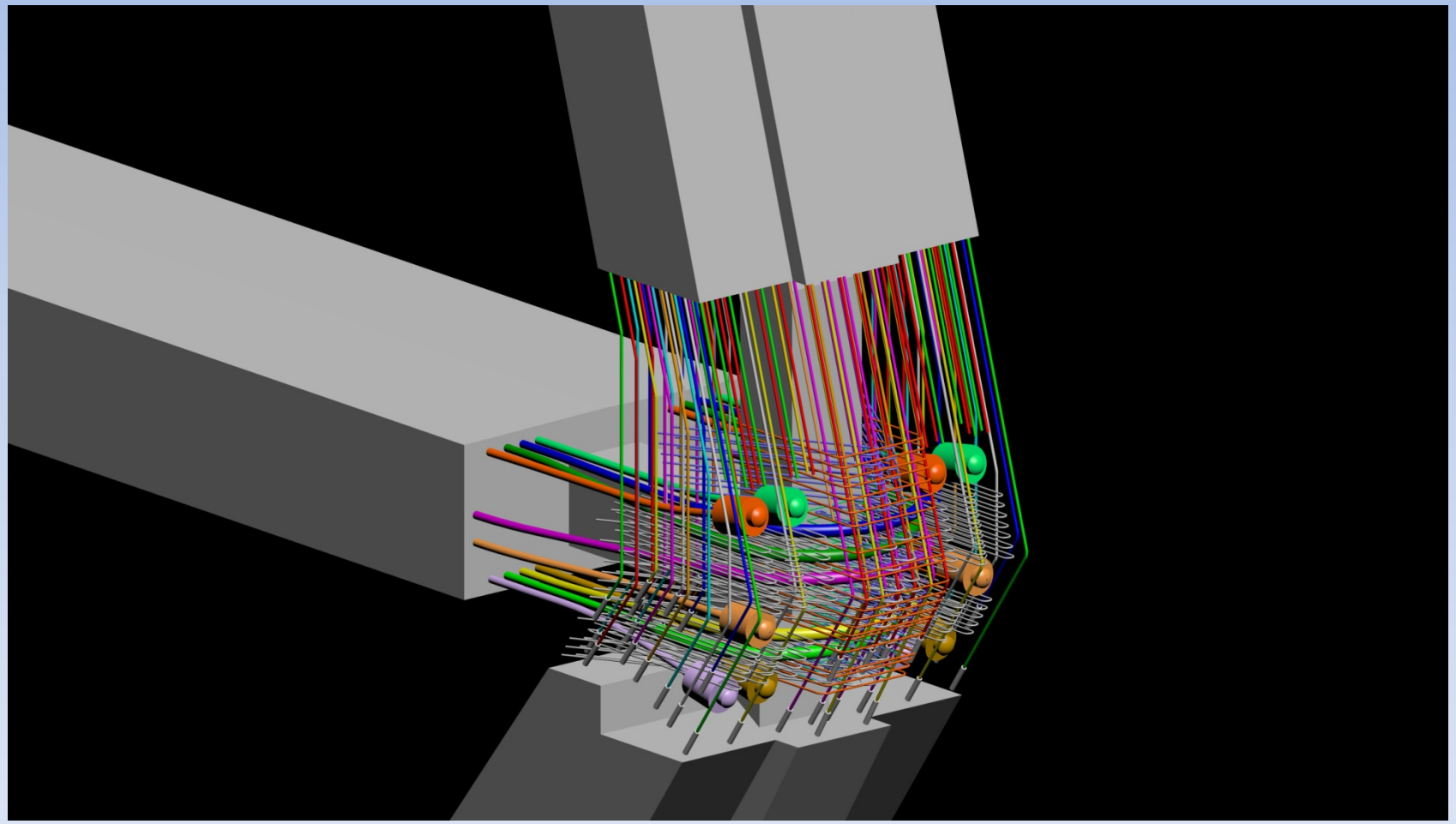

Continuing with the design

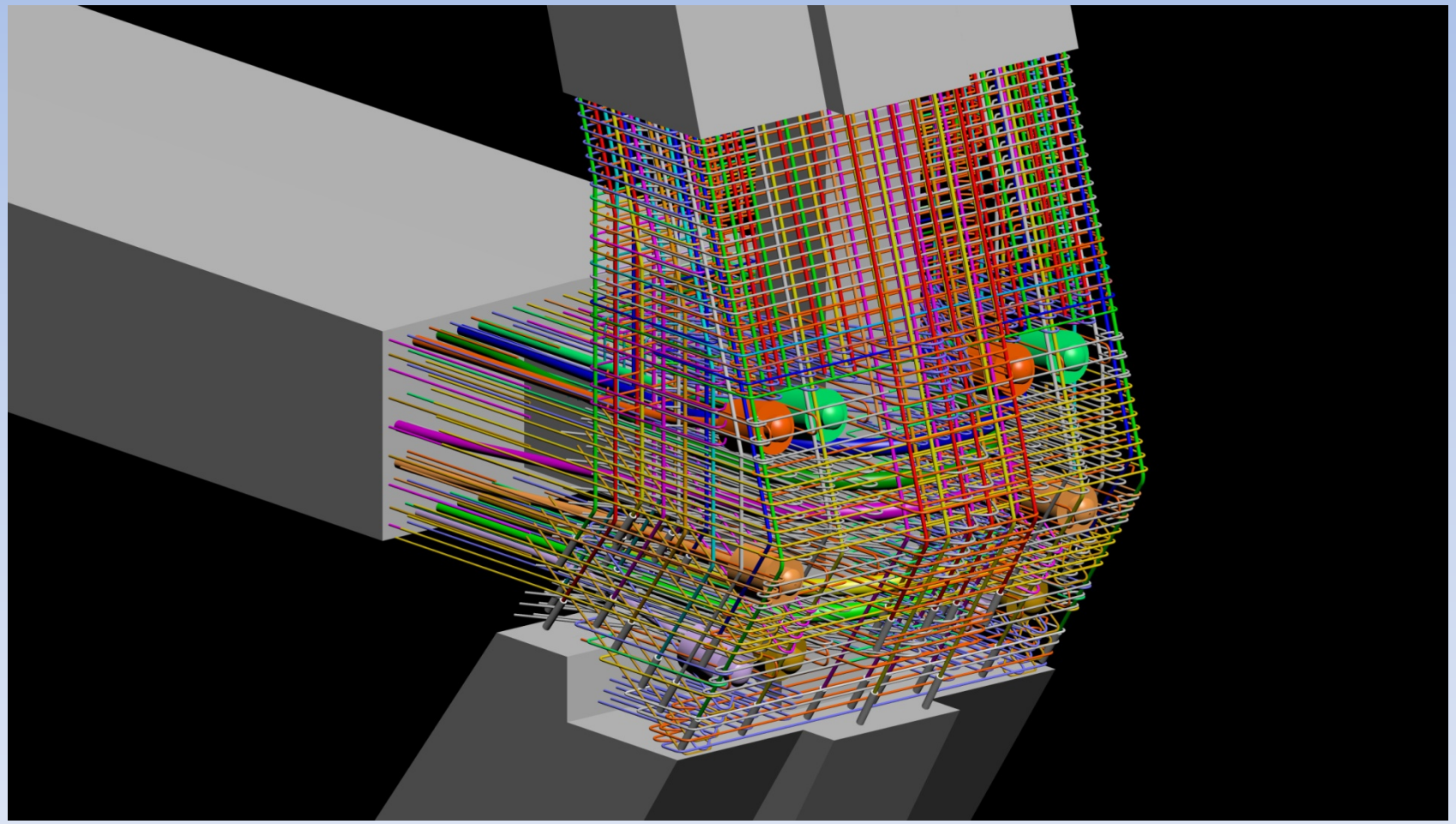

Continuing with the design

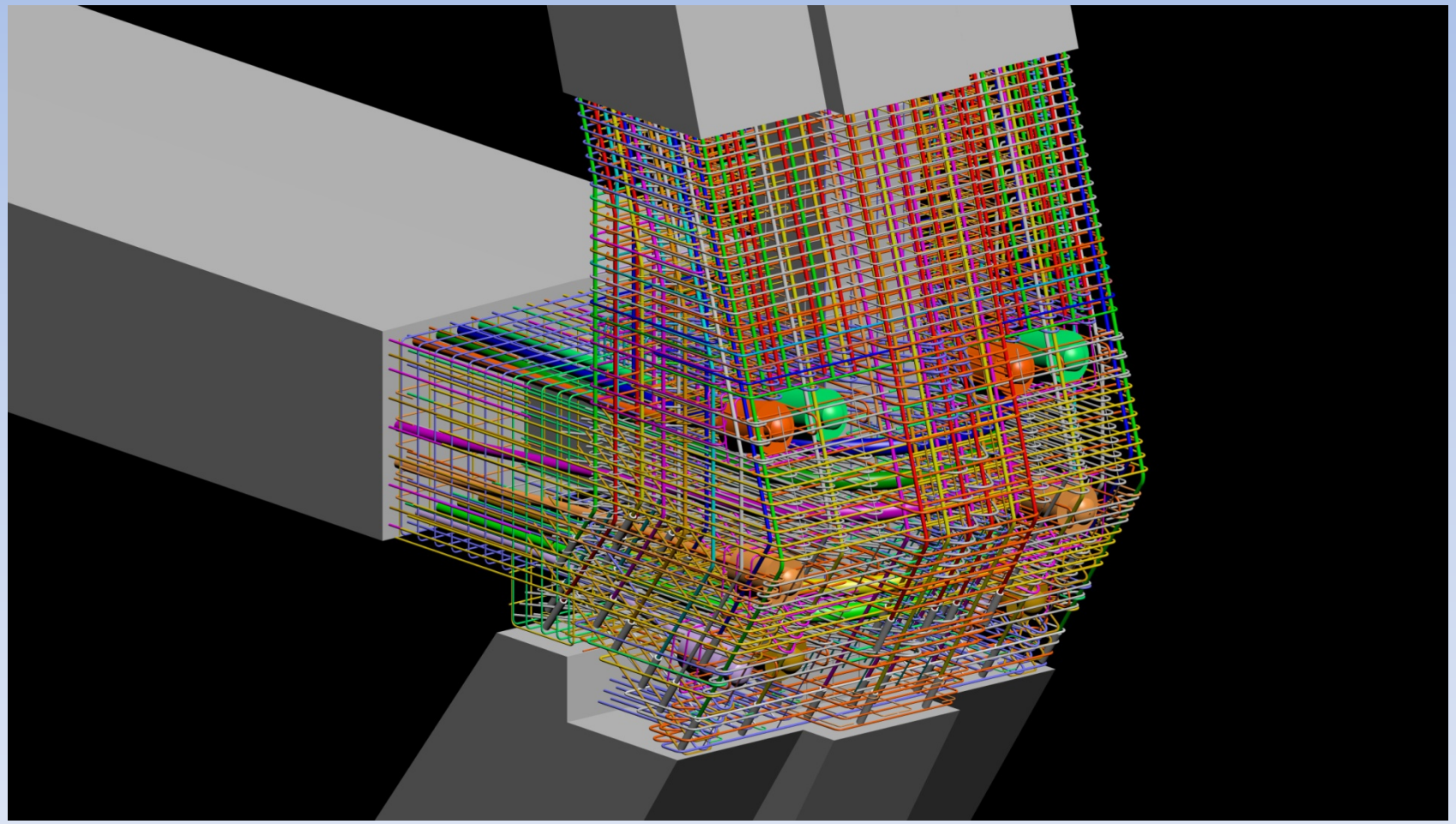

Rebar from Upper and Lower Leg and Roadway Strut

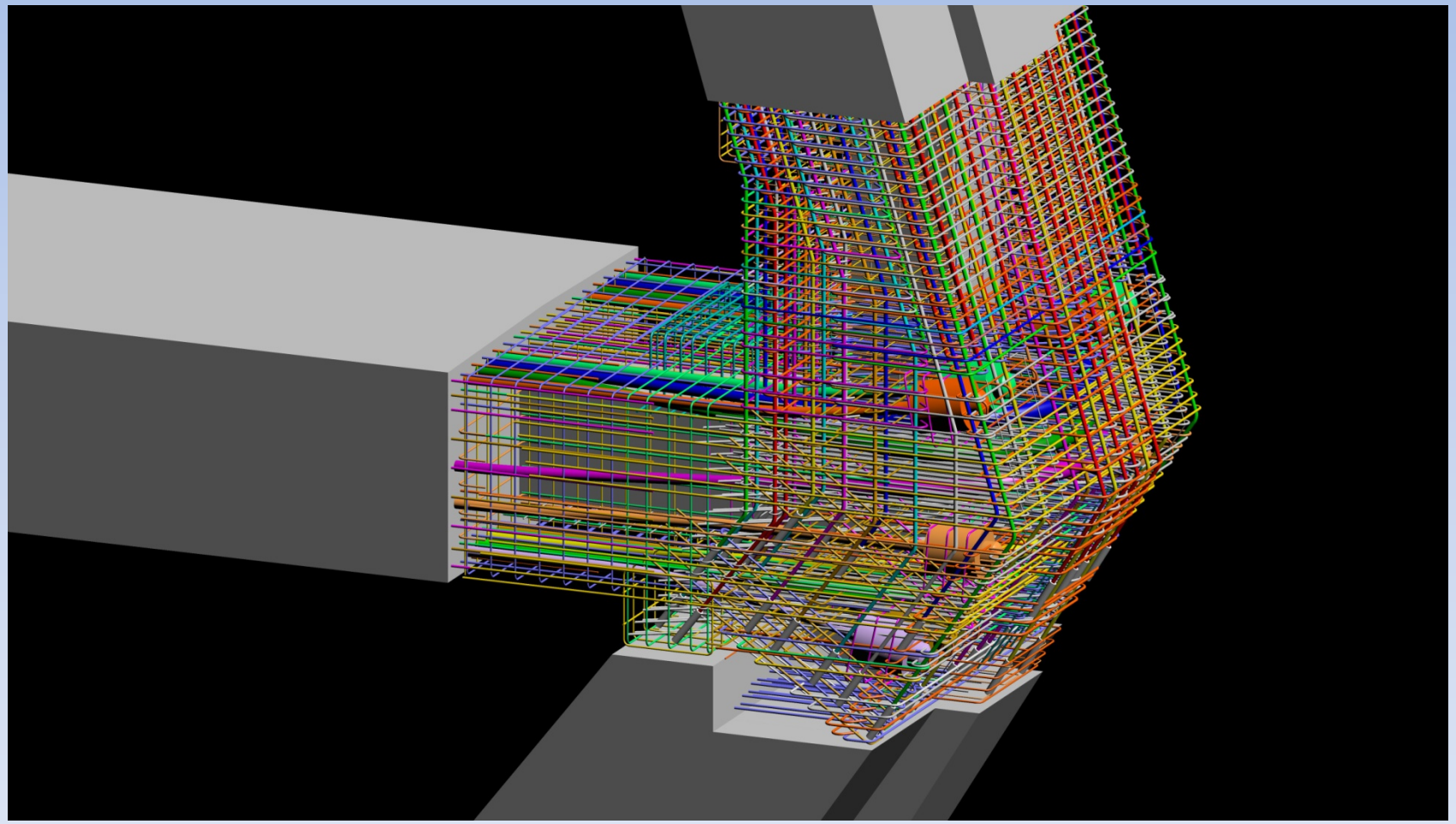

Minus the Roadway Strut concrete

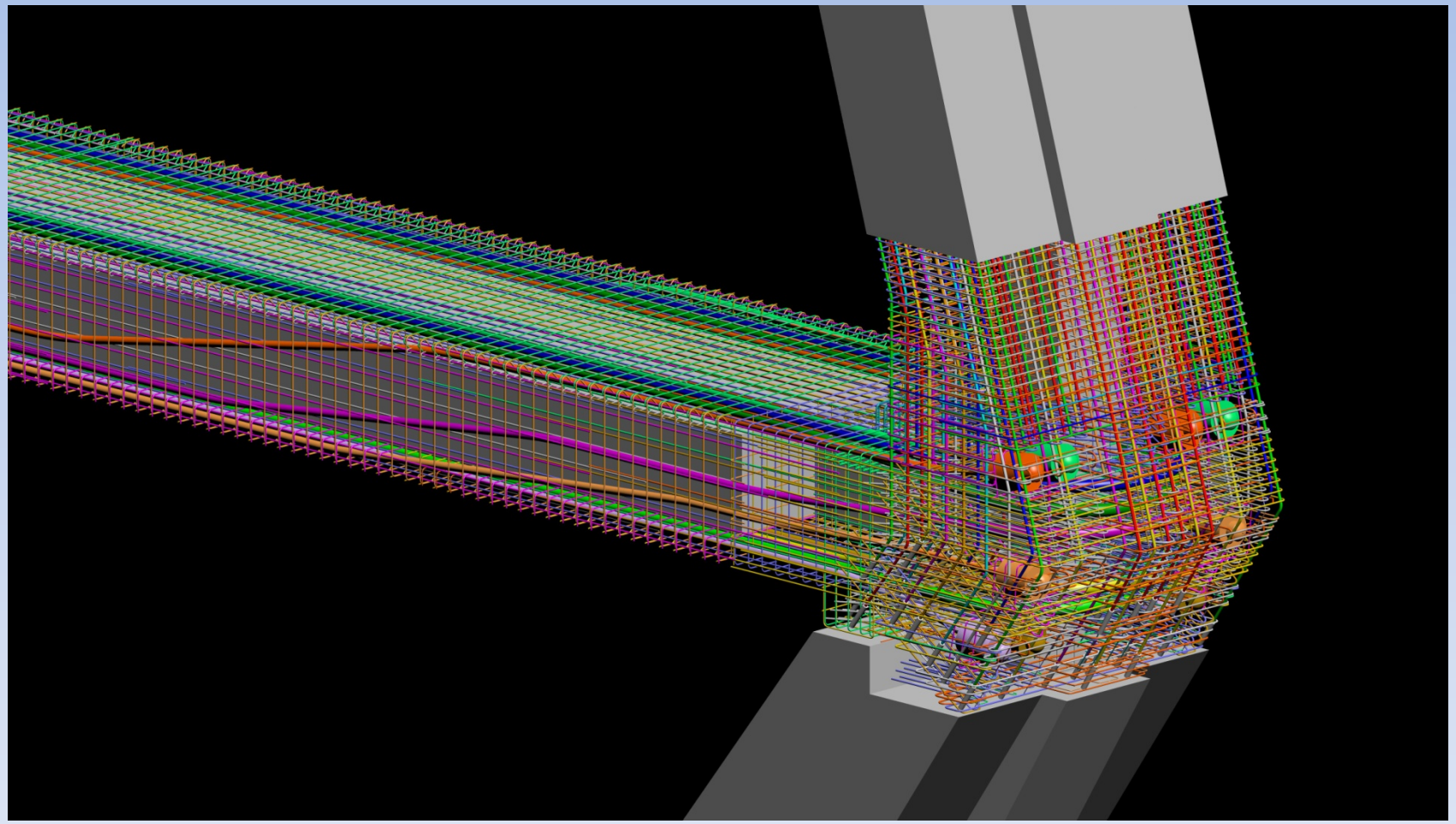

Close-up

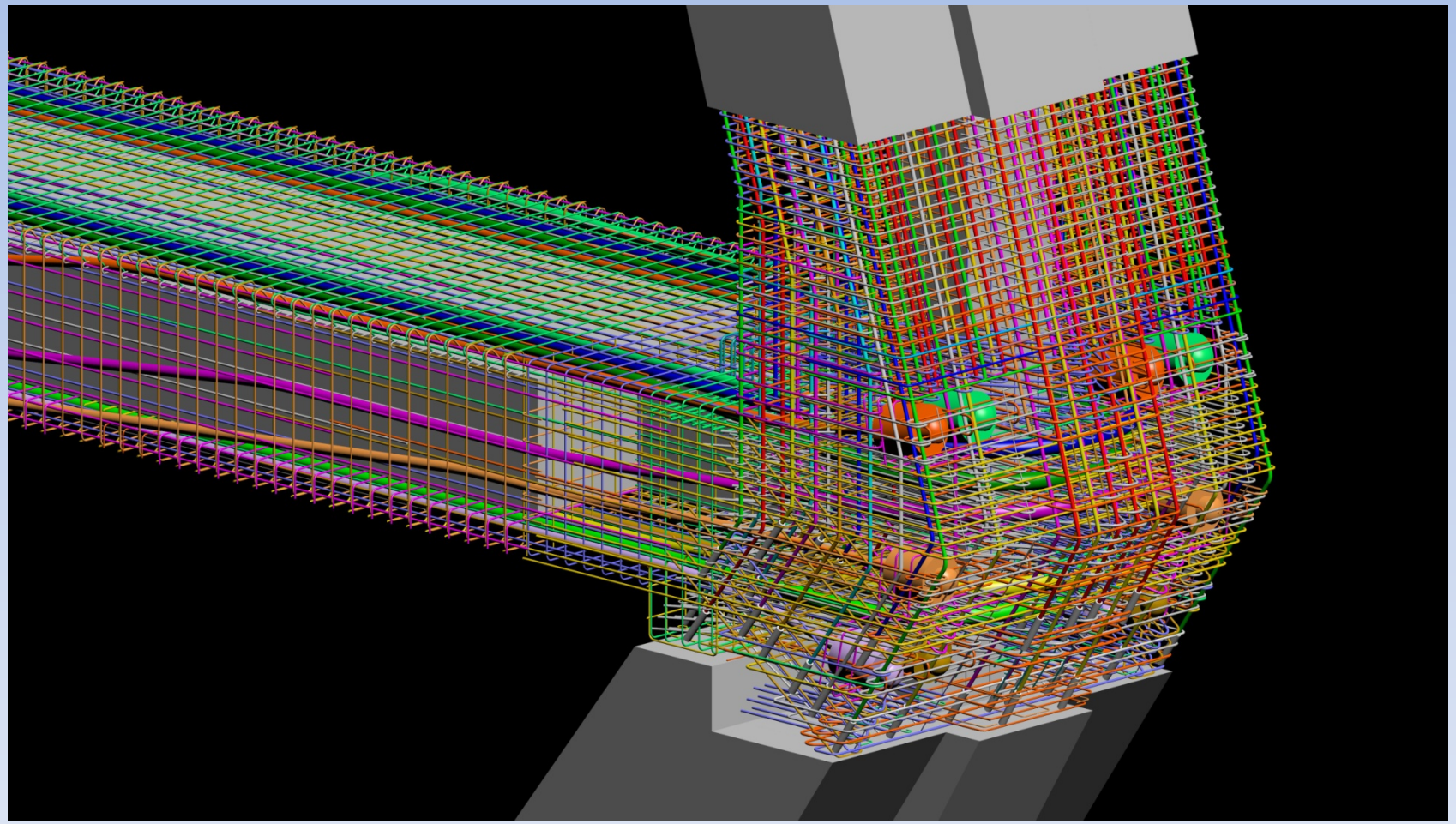

Post Tensioning and Rebar only

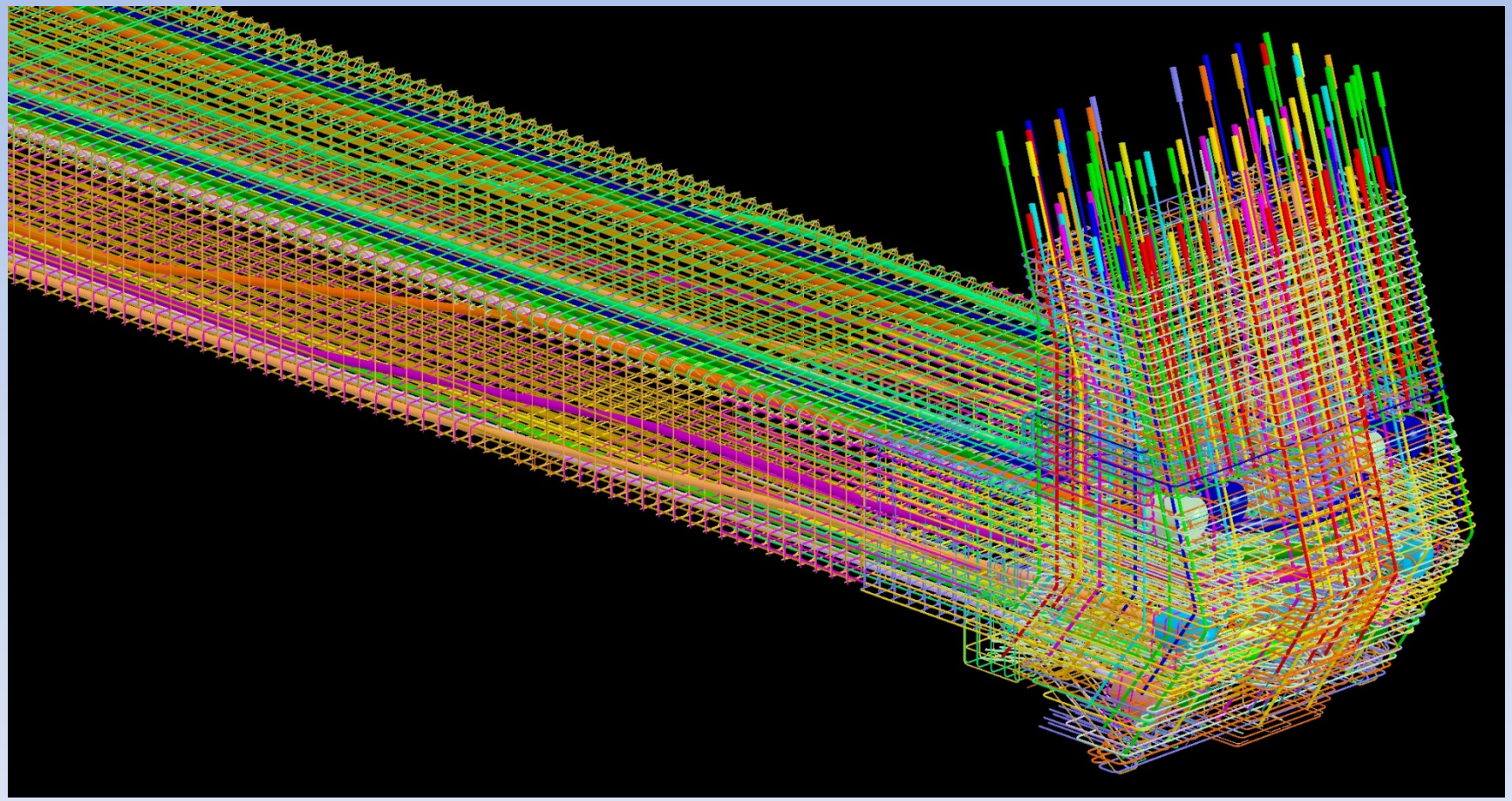

Exporting to .u3d file for 3D .pdf file

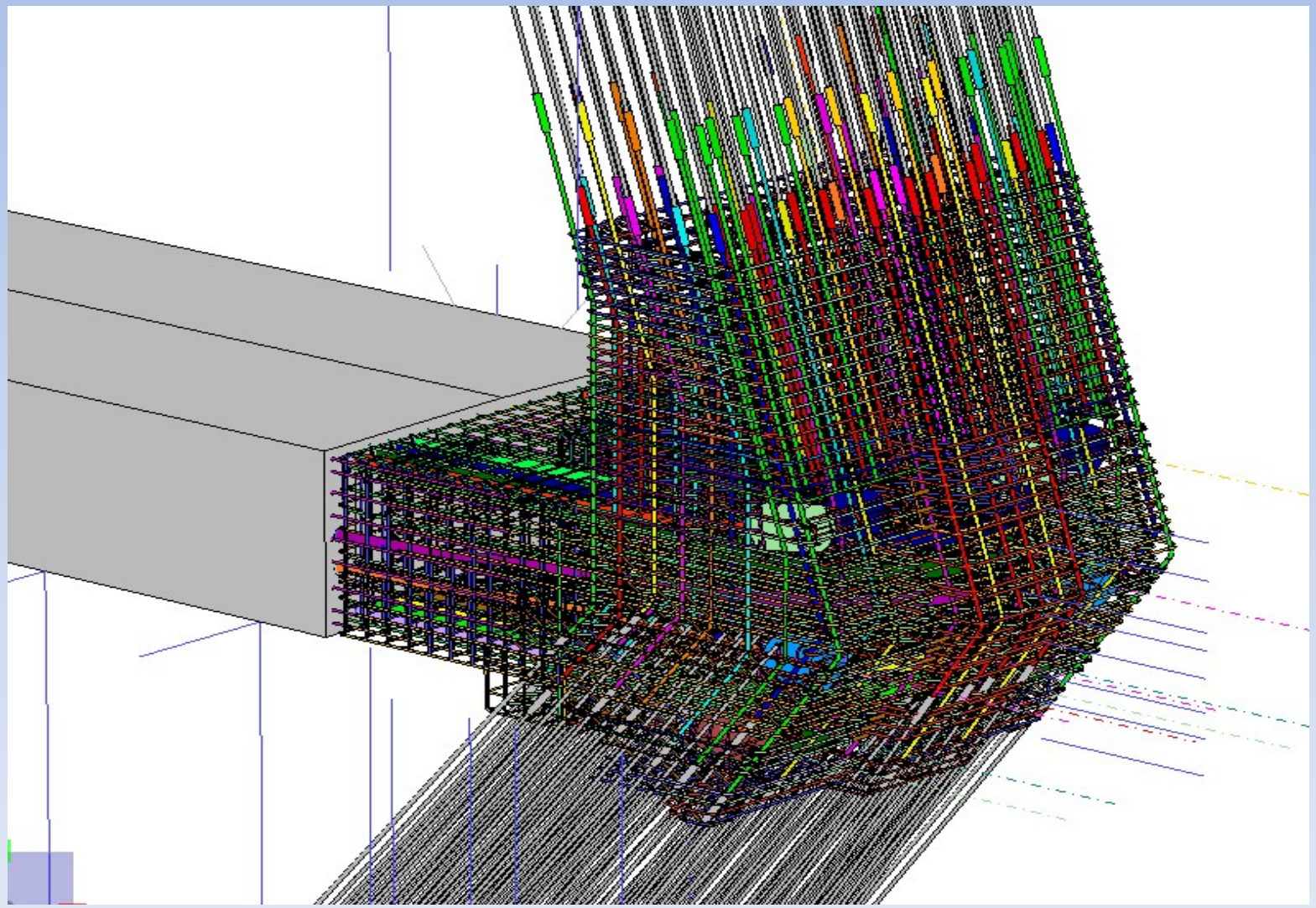

Girder to cable locations

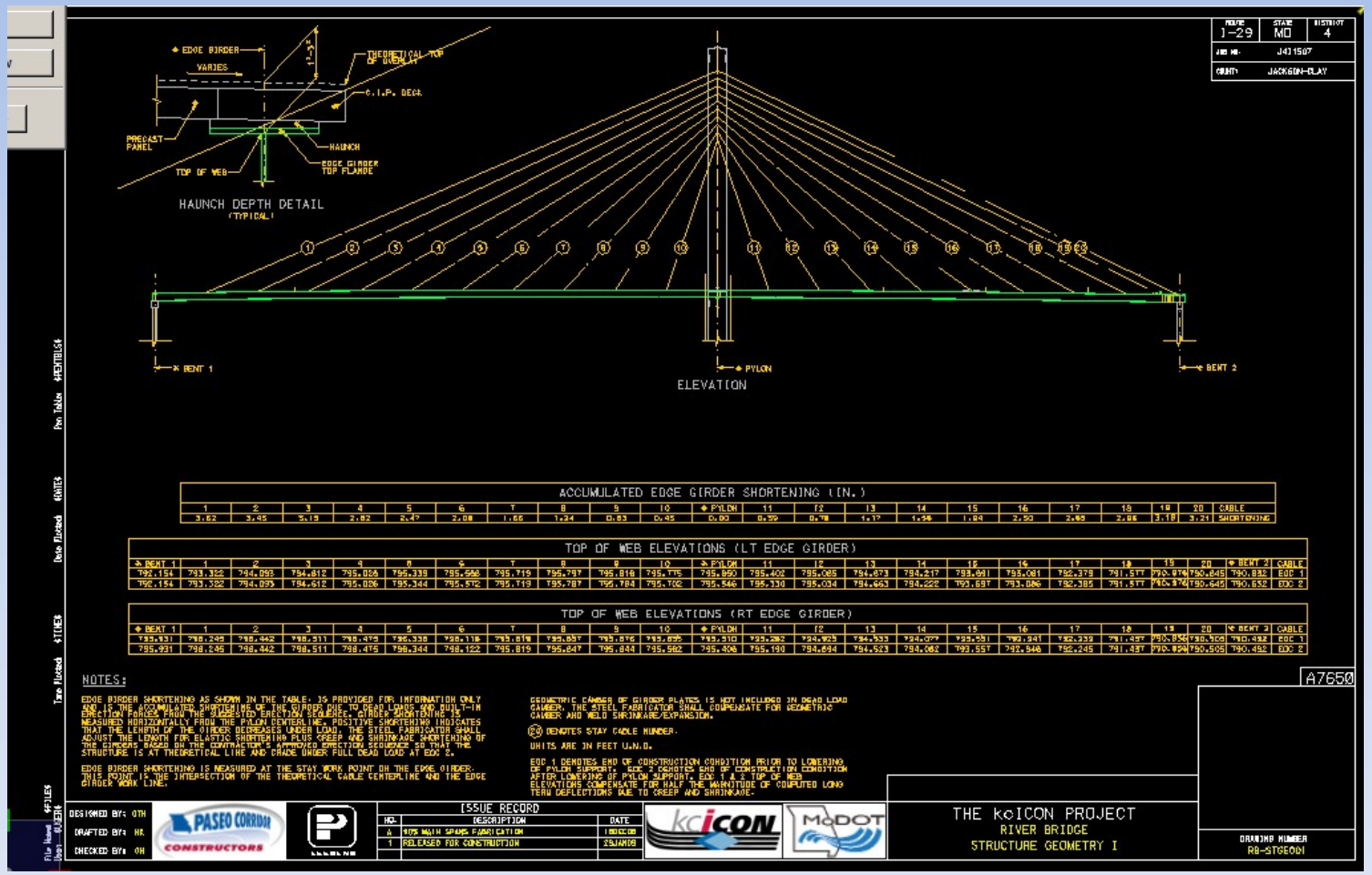

Girder Anchor layouts

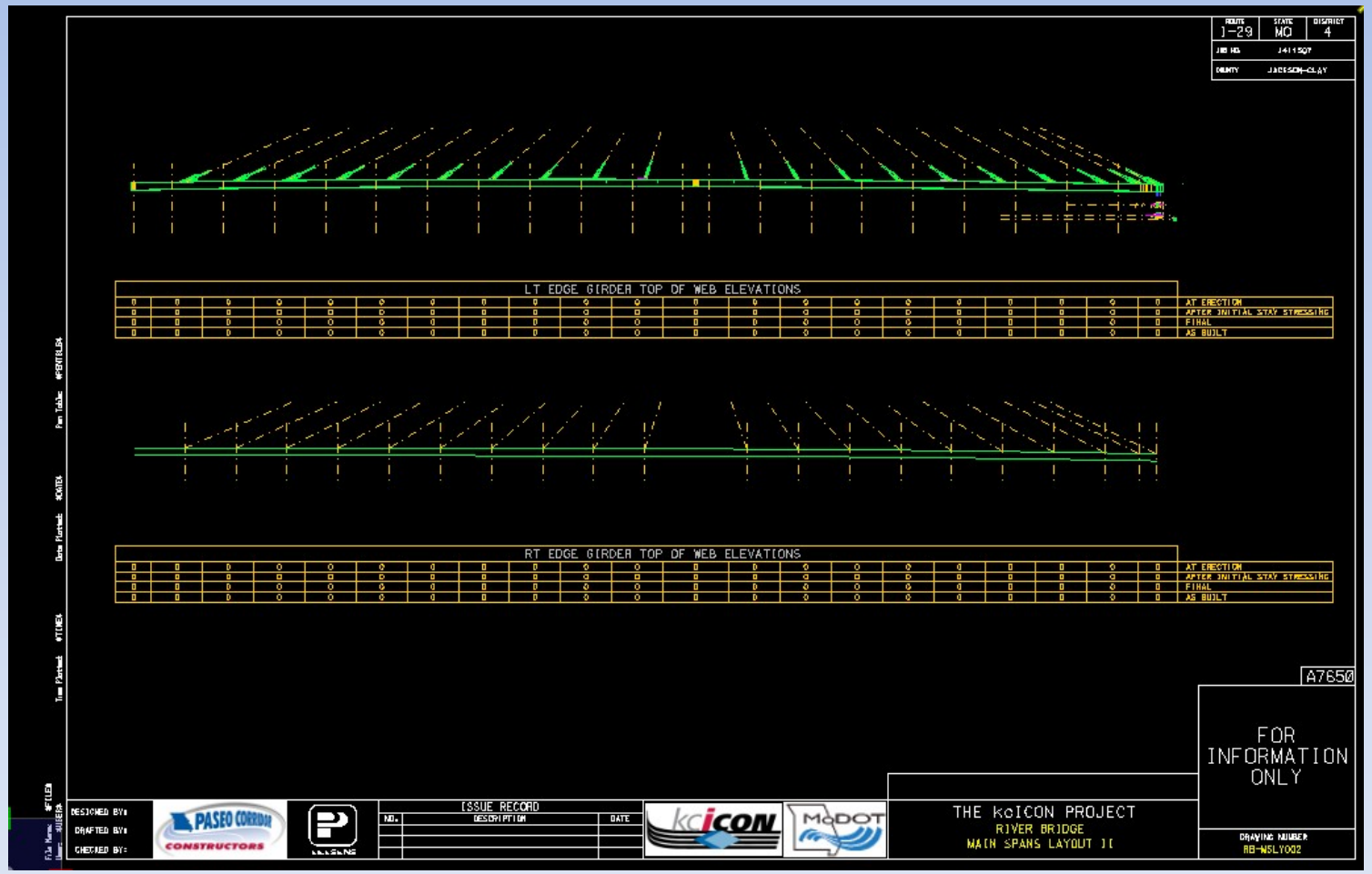

Pylon Anchor layouts

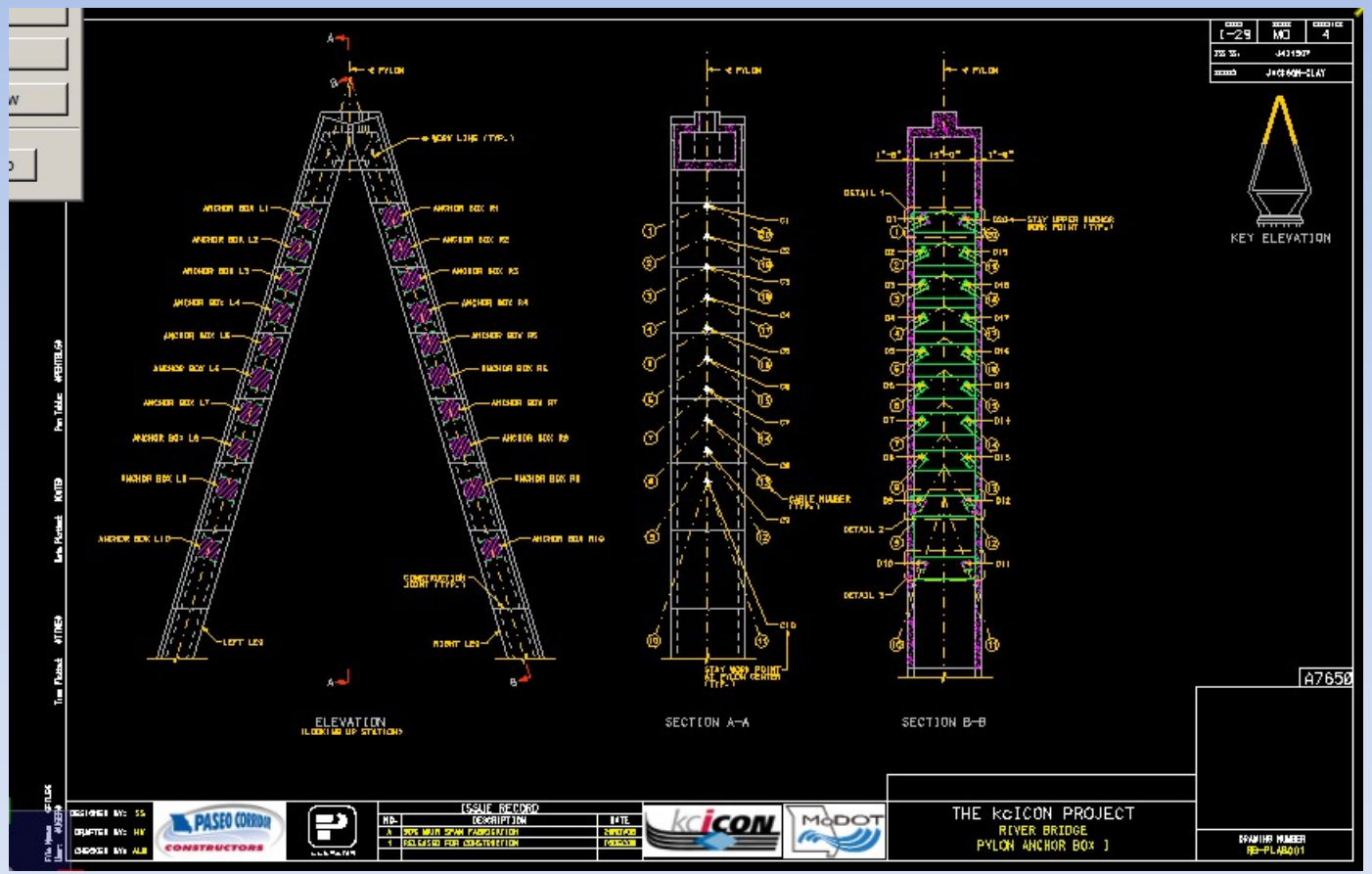

Pylon Anchor Details

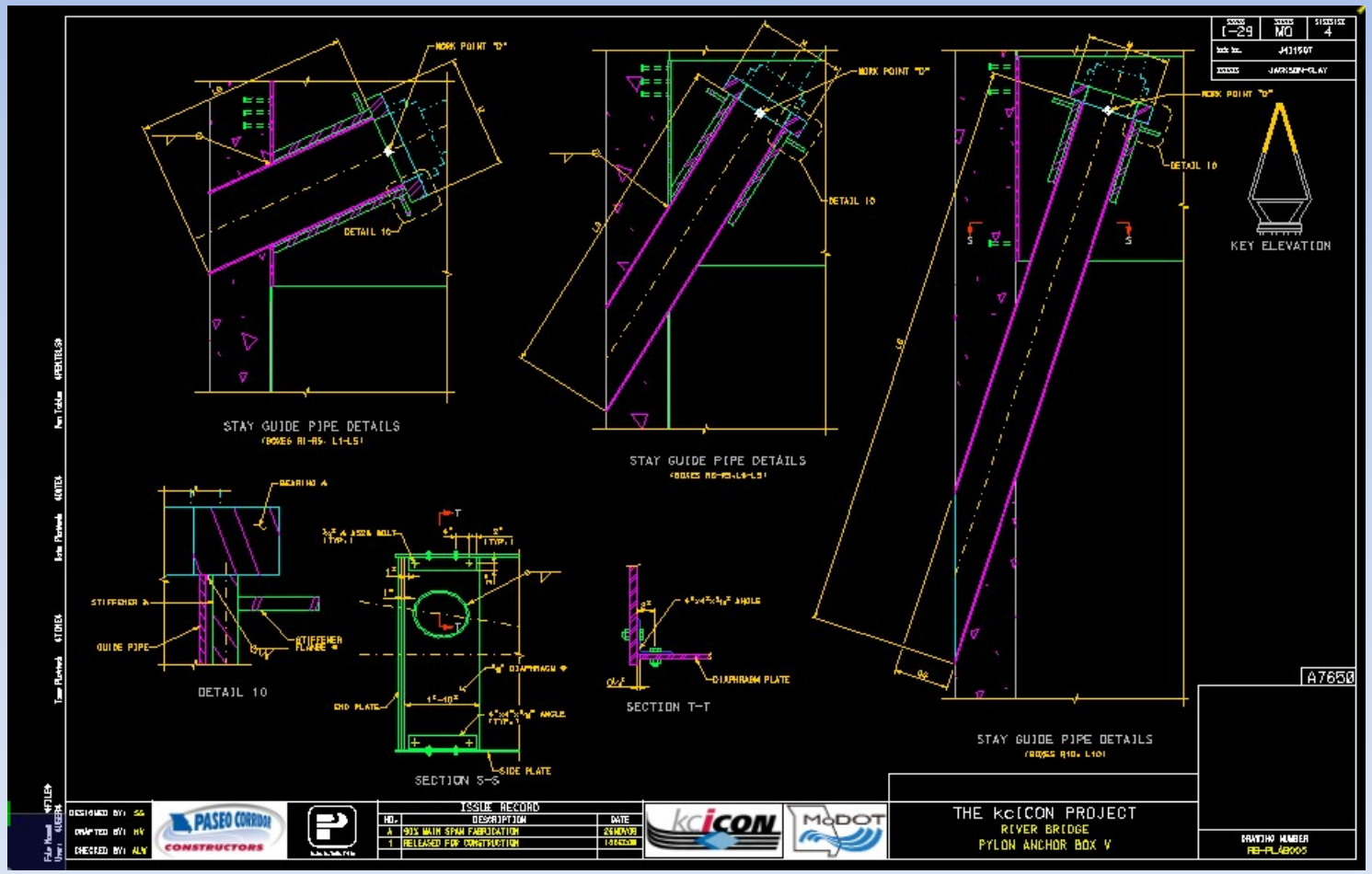

3D Pylon Anchor layout

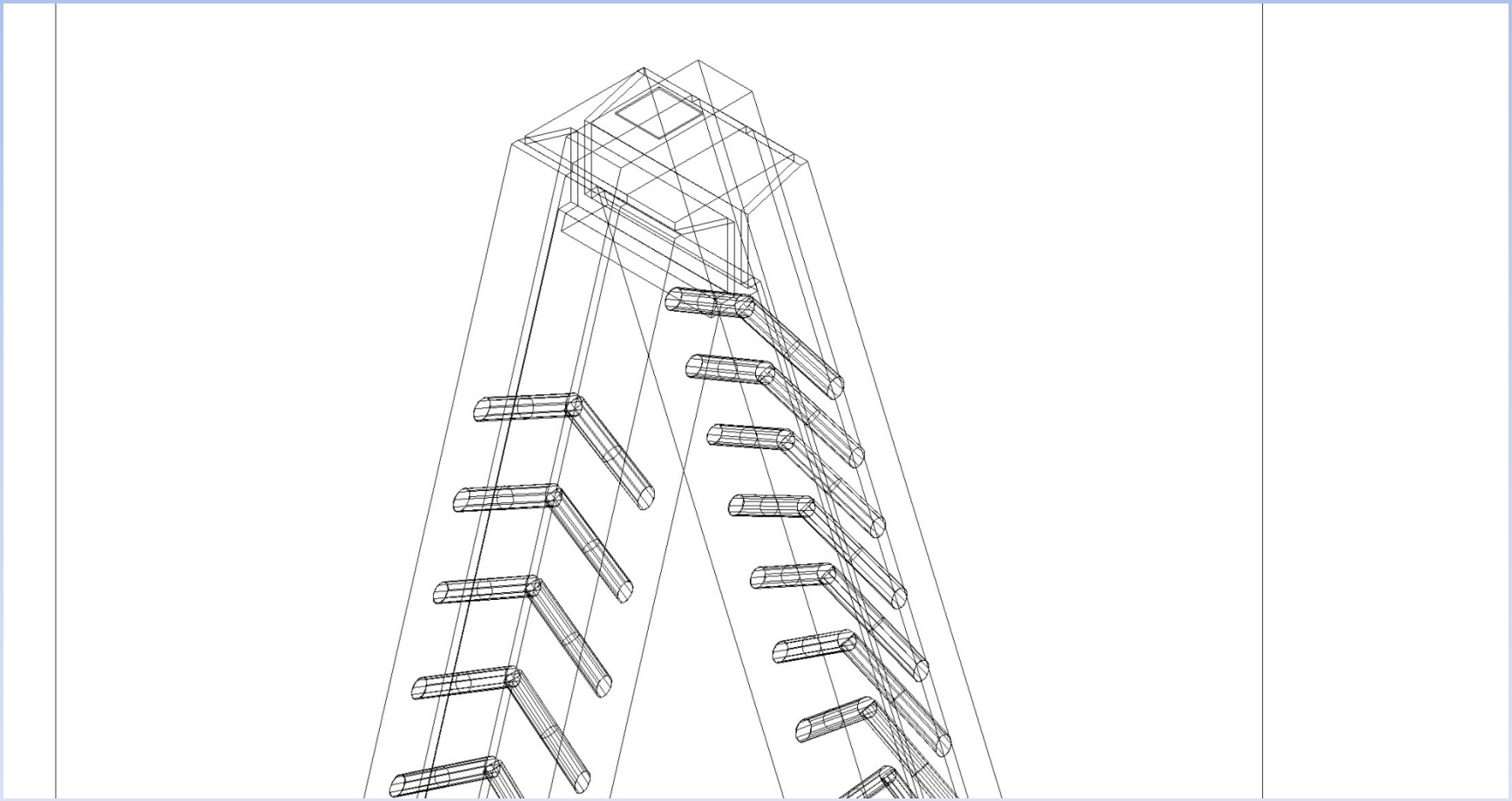

Cable and Anchor layouts

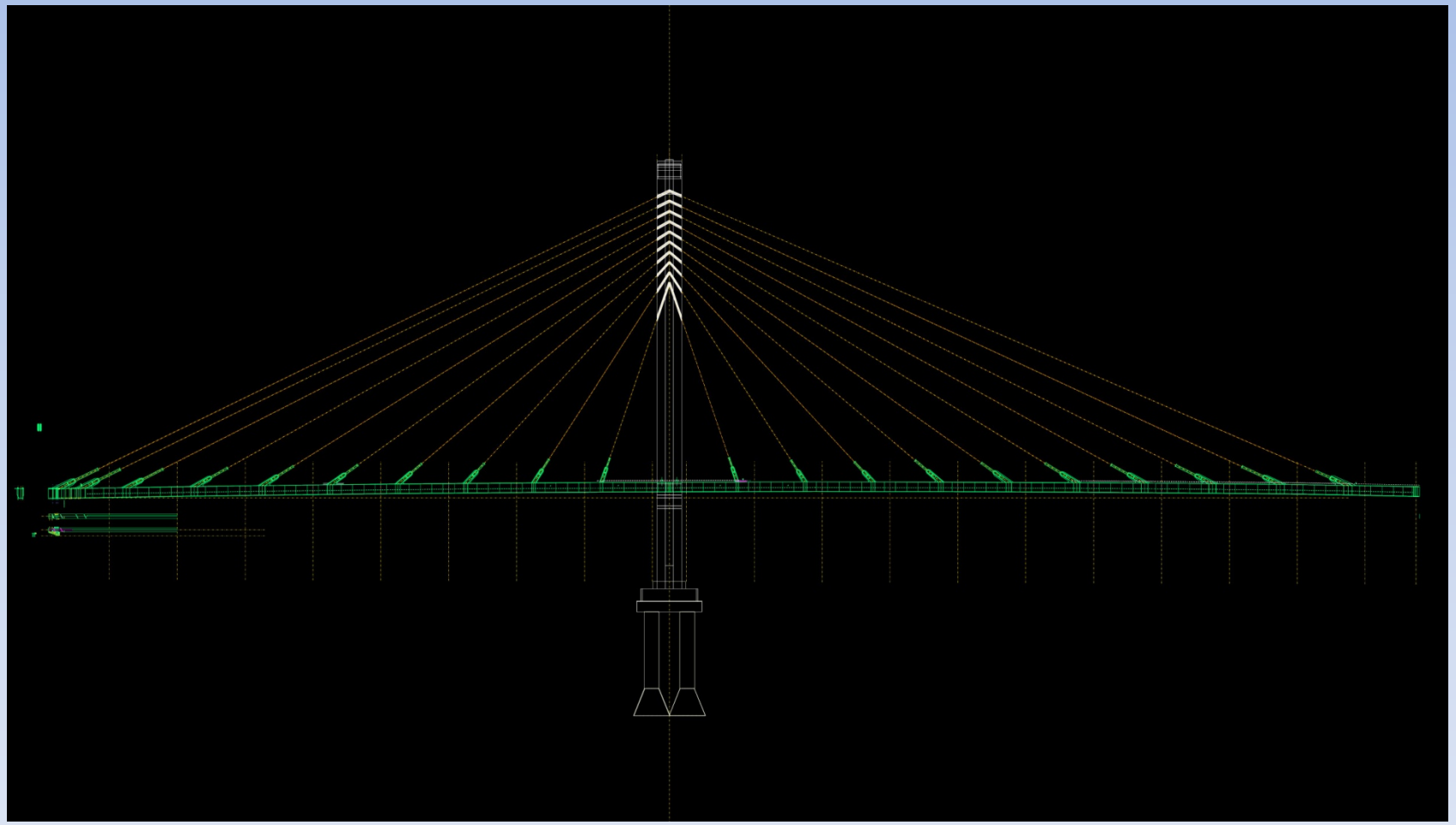

Front View

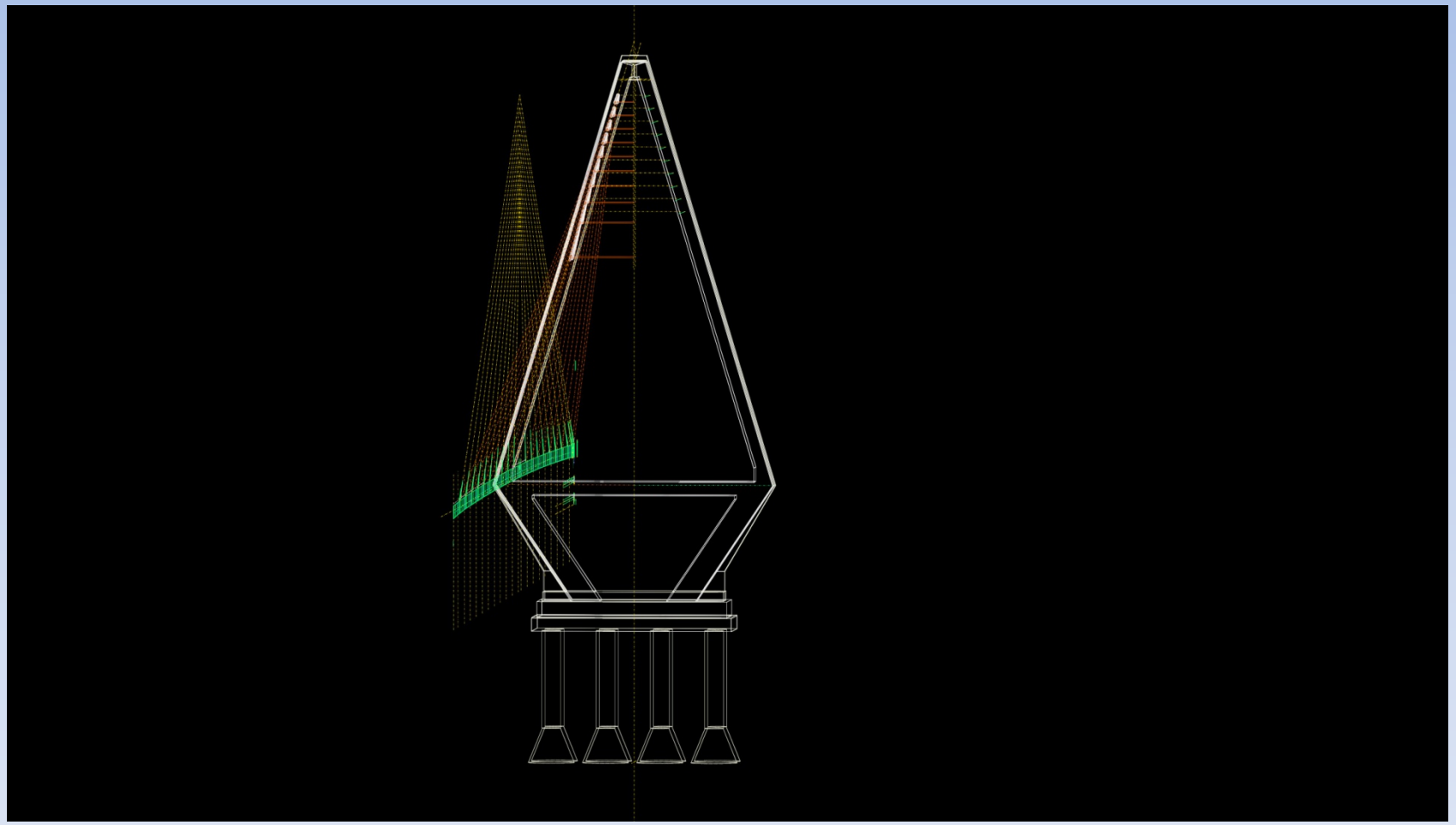

Isometric View

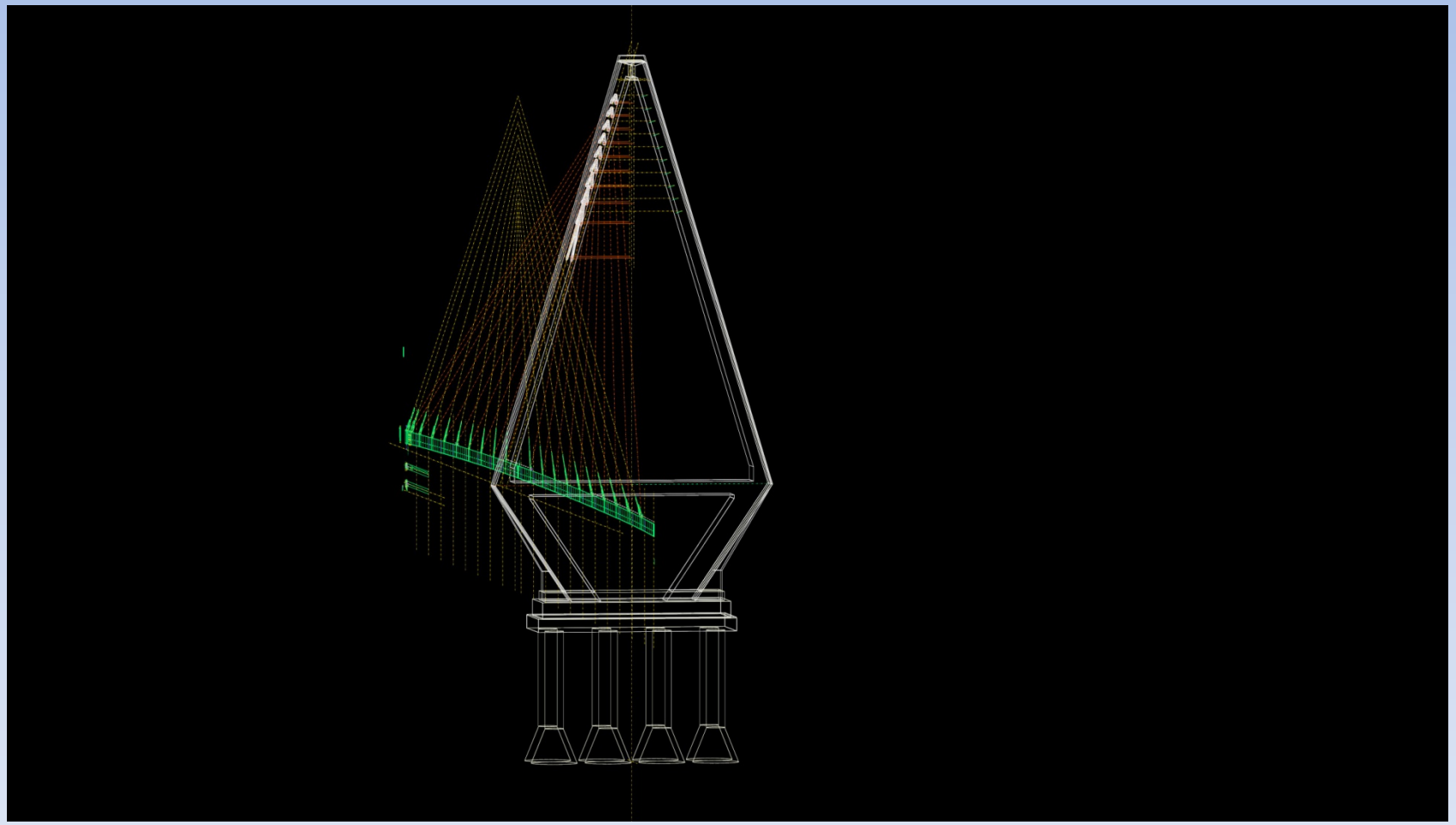

3D Rendered View

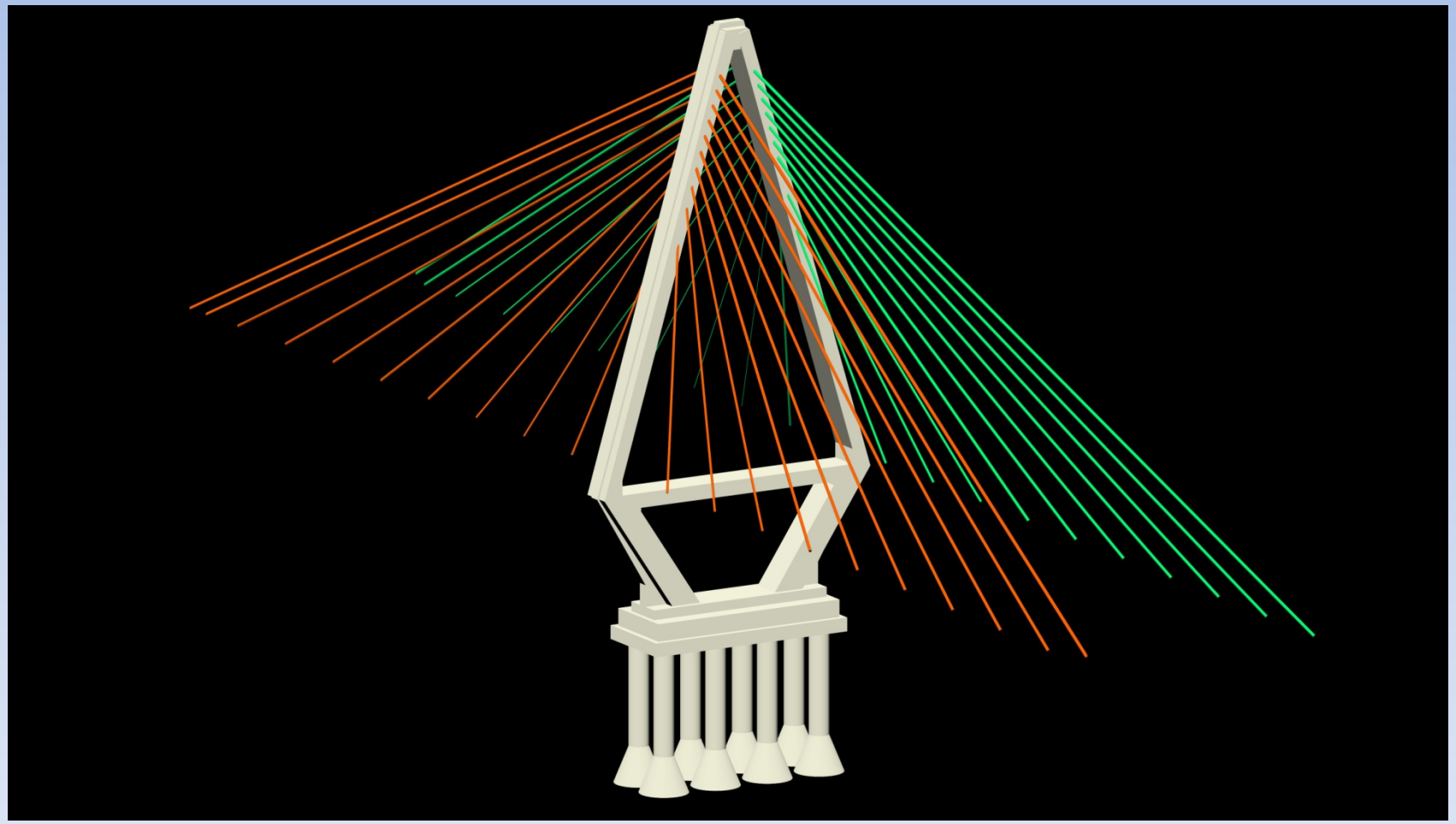

Pylon Head close-up

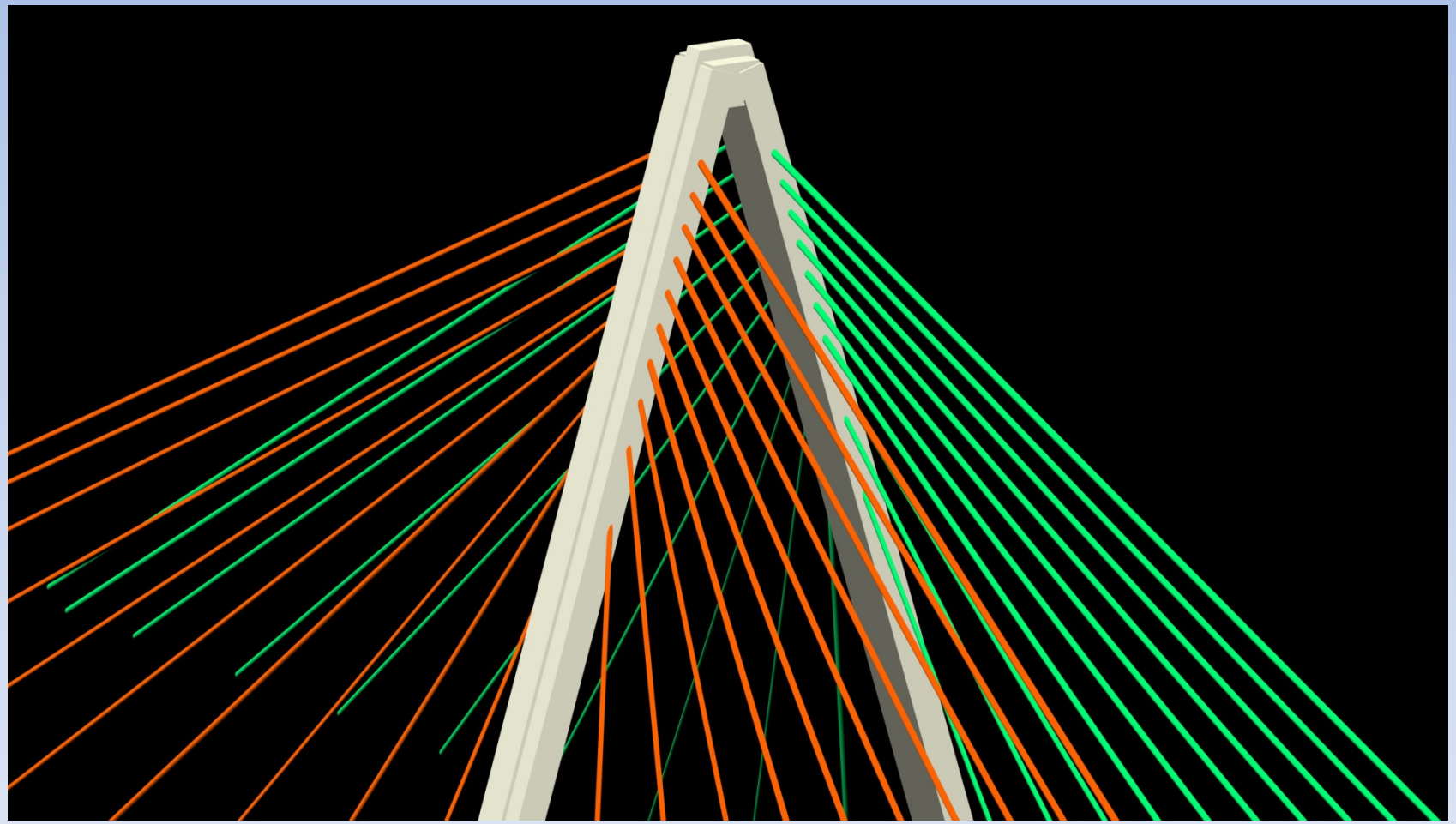

kcICON – Daytime rendering

kcICON – Lighting rendering

SketchUp & Google Earth

kcICON

Project Introduction

Fig. 2-Upstream Riverview

Fig. 1-Project Limits

Project Introduction

Fig. 3-Nighttime View

Fig. 4-Pedestrian View

Fig. 5-Motorist View

Fig. 6-Downtown Hastings View

Hastings

3D Printing

Services we provide:

3D Design

Digital Video
- Sound Effects
- Video Composites
- Non-Linear Video Editing

Animation

Advanced Visualization
- Real-time Visualization
- Interactive Programming

Renderings
- Photo Composite Renderings
- 3D Simulation Renderings

Cross Sections / Cut-Aways

GIS Mapping Techniques

Web Based 3D Visualization

Laser Scanning

Proposal, Presentation and Project Support

Pedestrian Bridges, Las Vegas, NV

Manhattan Street Scene

I-15 Interchange, Salt Lake City, UT

Thank you