Ionia

The following are roads that can be traveled on:

Center St.

Main St.

N. Sheppart St.

N. West St.

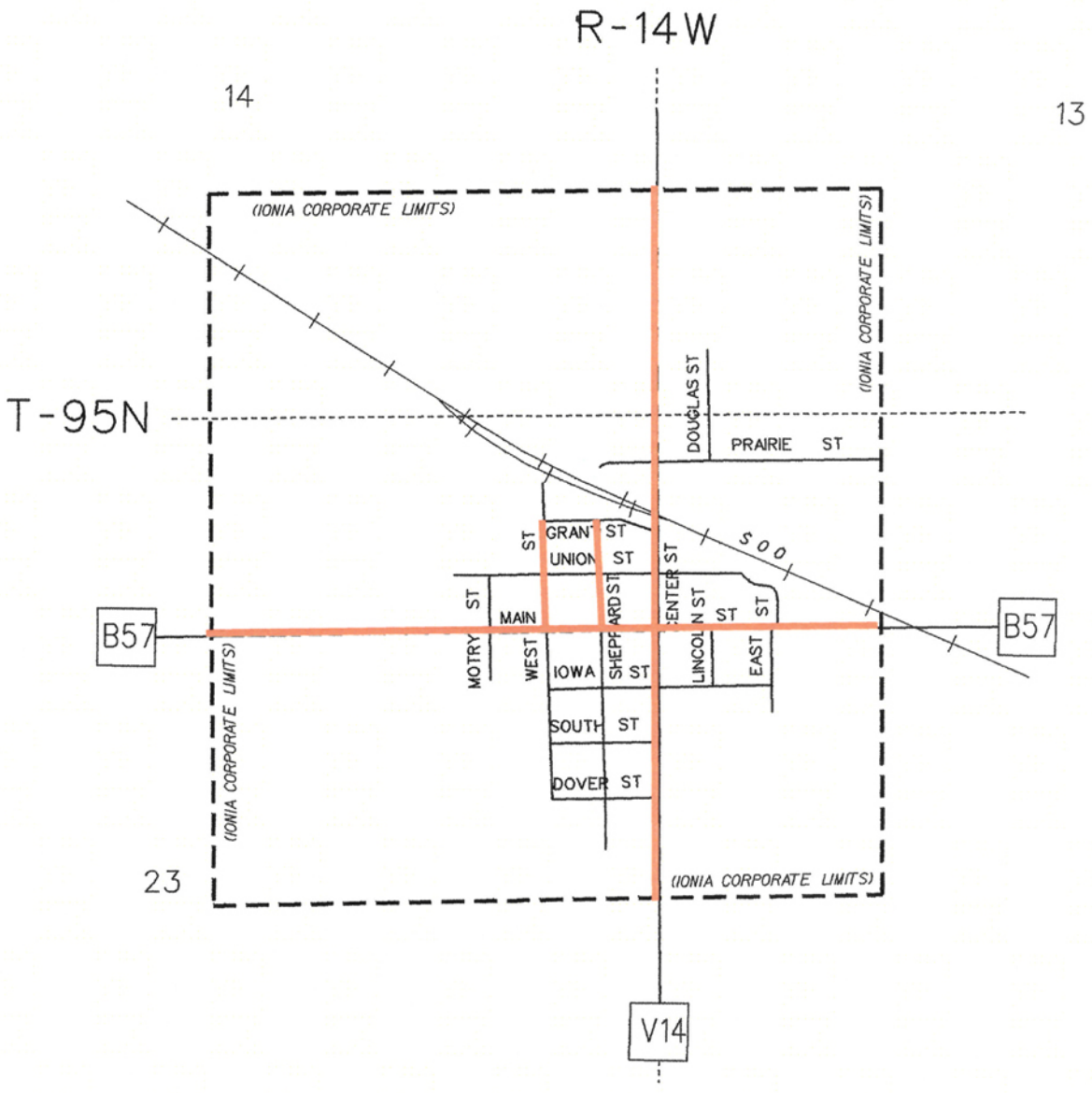

Iowa Department of Transportation

Office of Motor Carrier Services